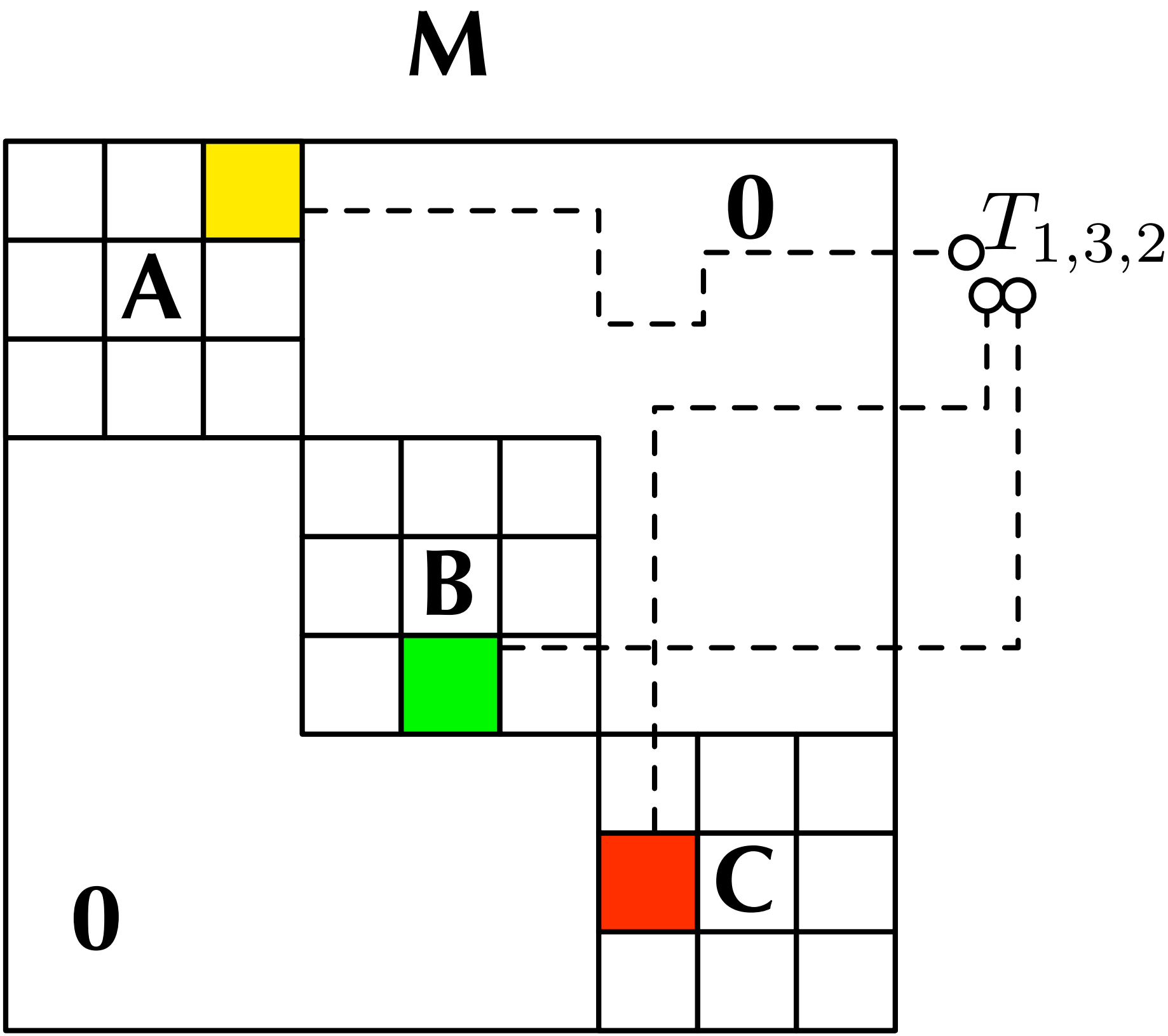
M
0
$T_{1,3,2}$
A
B
C
0