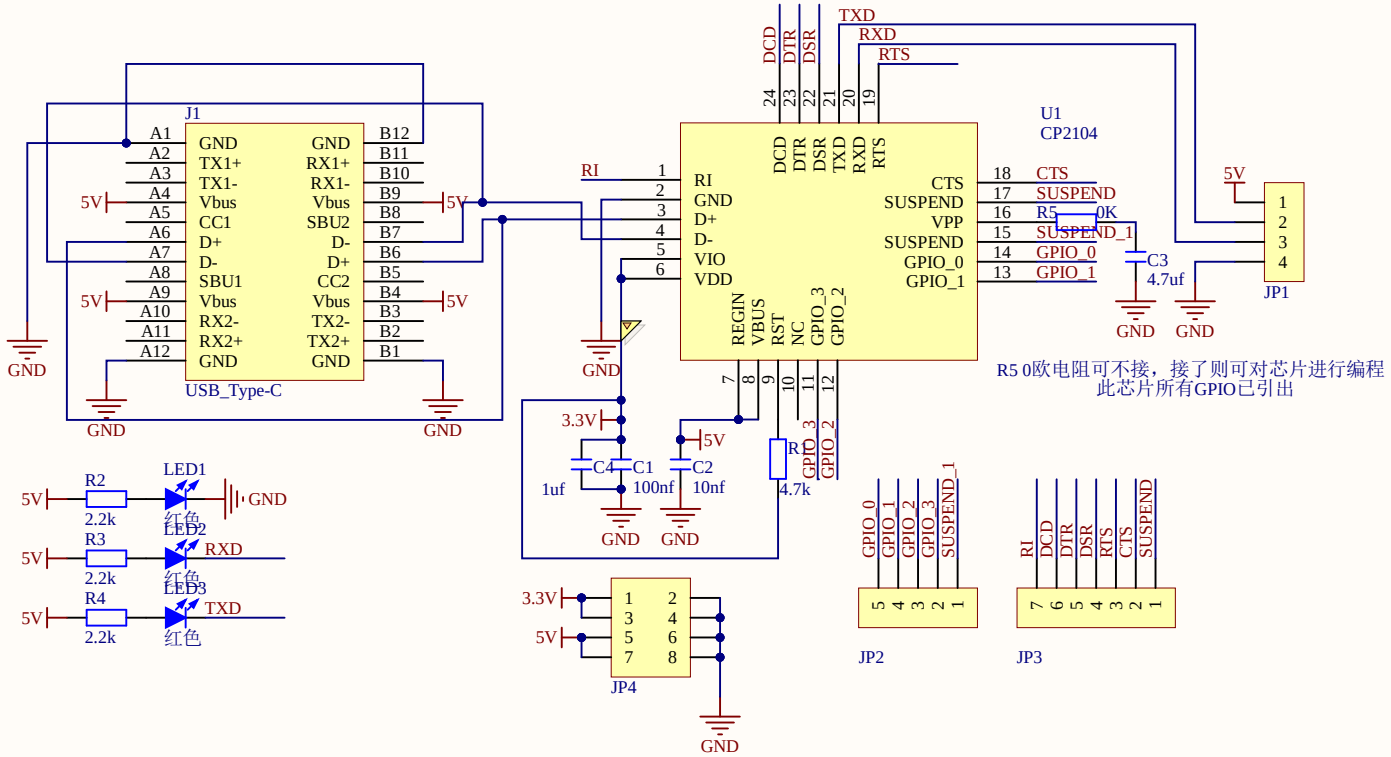

Title		
USB to TTL (CP2104)		
Size: Orcad A	Number: 1.0	Revision
Date: 8/13/2021	Sheet of	
File: D:\ApplicationPackages\..\Sheet1.SchDoc	Drawn By: Wenbiao Chen	