Electrical Power and Energy Systems 157 (2024) 109839

Contents lists available at ScienceDirect

International Journal of Electrical Power and Energy Systems

journal homepage: www.elsevier.com/locate/ijepes

A short-circuit calculation solver for power systems with power electronics converters☆

Jie Song [a,*], Josep Fanals-Batllori [b], Leonardo Marín [b], Marc Cheah-Mane [a,b], Eduardo Prieto-Araujo [a,b], Eduard Bullich-Massagué [a], Oriol Gomis-Bellmunt [a,b]

[a] Departament d'Enginyeria Elèctrica, Centre d'Innovació Tecnològica en Convertidors Estàtics i Accionaments (CITCEA-UPC), Universitat Politècnica de Catalunya, Barcelona 08028, Spain

[b] eRoots Analytics SL, Barcelona 08039, Spain

ARTICLE INFO

Keywords:
Short-Circuit Calculation
Voltage source converter
Current-saturation
Newton–Raphson solver

ABSTRACT

Power electronics converters have been widely deployed in modern power systems in different voltage levels. The complex operation characteristics of power converters, which combine different control modes and various current saturation states, are also significantly changing the power systems' behavior in fault conditions. The objective of this paper is to develop a steady-state short-circuit calculation solver for power systems with power electronics without the need of detailed dynamic models. In particular, the steady-state operation equations related to the converter control are included in the system formulation. An extended Newton–Raphson (NR) solver is proposed to compute the short-circuit equilibrium point that considers converters' operation limits. Also, an iterative algorithm is presented in order to efficiently identify the current saturation states of power converters under a specific short-circuit fault scenario. Case studies have been presented with several power systems with voltage source converters (VSCs). Dynamic simulations are included to validate the accuracy of the proposed methodology.

1. Introduction

Modern power systems are increasingly penetrated with power electronics converters as they are widely adopted for grid integration of renewable generation, deployment of batteries, HVDC transmission, EV charging stations and other converter-interfaced loads [1–4]. Compared to conventional generators and loads, power electronics converters have a totally different operational characteristic. On the one hand, power electronics converters have fast dynamics and full controllability under disturbance [5]. On the other hand, power converters have to saturate the current in case of being overloaded [6]. Such current limitation modifies converters' operation and should be considered in the short-circuit calculation as several or all converters are likely to operate with a saturated current during the fault.

Short-circuit calculation is essential for analysis, operation and protection of power systems. Short-circuit equilibrium points obtained with different fault scenarios provide evidence for secure sizing of electric installation and proper tuning of protection settings [7,8]. In power electronics-dominated systems, an accurate short-circuit calculation also enables optimum design for grid-support operation of power converters [9].

Synchronous generators are considered as the main source of short-circuit current in conventional power systems [10]. Typically, the synchronous generator is modeled as a Thévenin equivalent for short-circuit calculation [11–13]. This linear equivalent is not suitable to model power electronics converters as it fails to represent the complex control and potential current saturated operation of converters [6,13,14]. The IEC 60909 standard indicates that power converters should be modeled as current sources that inject maximum current for short-circuit calculation [15,16]. However, it has not been clearly defined how to obtain the current angle in a specific fault scenario considering the converter control mode [17].

Short-circuit analysis for power electronics dominated power systems reported in the literature is predominantly addressed with dynamic studies. A quasi-steady-state model has been developed to obtain the short-circuit current characteristics of VSCs where the control

☆ This work was supported by FEDER/Ministerio de Ciencia, Innovación y Universidades - Agencia Estatal de Investigación, Project PID2021-124292OB-I00. The work of M. Cheah-Mane and E. Prieto-Prieto was also supported by Serra Húnter program. The work of O. Gomis-Bellmunt was also supported by ICREA Academia program.

* Corresponding author.
E-mail address: jie.song@upc.edu (J. Song).

https://doi.org/10.1016/j.ijepes.2024.109839
Received 26 July 2023; Received in revised form 23 November 2023; Accepted 25 January 2024
Available online 6 February 2024
0142-0615/© 2024 The Author(s). Published by Elsevier Ltd. This is an open access article under the CC BY-NC-ND license (http://creativecommons.org/licenses/by-nc-nd/4.0/).

dynamics are considered [18,19]. A discrete-time model has been adopted in [20] to study the MMC response during the fault. However dynamic studies are more costly and time-consuming compared to the steady-state approach [21].

Steady-state short-circuit calculation has also been reported in the literature for power systems with power electronics. Some references suggest modeling the VSC as a current source injecting the maximum current while the current angle is estimated following the pre-fault operation point [22,23]. A VSC phasor model is proposed in [24–26] where the VSC current injection is adjusted iteratively considering the grid-support control and converter current limitation for short-circuit calculation. However, these studies are limited to VSCs in grid-following (GFL) control (PQ mode in particular). A more comprehensive study covering different converter control modes (e.g. grid-forming, GFM) is still demanded for short-circuit calculation.

The authors of this paper have proposed a different methodology for short-circuit calculation of power systems dominated by power electronics [27–30]. Unlike conventional programs which formulate the studied system with a set of linear equations, a non-linear formulation is adopted to include the governing equations implemented in converter control. Then, short-circuit equilibrium points can be identified by solving sets of numerical equations modeling studied system corresponding to various current saturation states of power converters. This paper adopts the same formulation for effective short-circuit calculation. Compared to the previous publications of the authors [27–30], the following contributions has been included in this paper:

1. An extended Newton–Raphson (NR) solver to cope with the short-circuit formulation of power systems with power electronics converters. Such specialized solver enables efficient computation of established formulation of short-circuit calculation, which has not been included in our previous publications.
2. An iterative algorithm that identifies the current saturation state of a converter in a specific fault scenario considering the current limits and grid-support functions. Such iterative approach has been also presented for converters in PQ control in [29,30]. In this paper, it has been extended to different converters' control modes (e.g. PV and grid-forming).

The power systems presented in this paper are analyzed in a balanced three-phase voltage condition (i.e. symmetrical three-phase to ground faults are studied) and are expressed in single-phase with per-unit values. The proposed methodology for short-circuit calculation has been tested in several VSC-based benchmark systems and the obtained results are validated with dynamic simulations.

2. Steady-state formulation for short-circuit calculation

2.1. VSC equivalent model

Compared to conventional synchronous generators, the VSC has fast dynamics and full controllability. Therefore, it is assumed that the VSC can always operate following the governing steady-state equations related to their control [31]. The VSC equivalent model with different control modes has been presented in [27,28]. This is also briefly described in this paper for the sake of completeness. In particular, the VSC operation combines a specific control mode and various current saturation states, which result in a piecewise format in the equivalent model.

The equivalent model of the converter in PQ control can be divided into three potential current saturation states: unsaturated (USS), partially saturated (PSS) and fully saturated (FSS). The resulted operation equations are expressed as follows [27,28]:

$$\begin{cases} p = p_{ref};\ q = q_{ref} & \text{if USS} \\ i = i_{vsc}^{\max};\ q = q_{ref} & \text{if PSS} \\ i = i_{vsc}^{\max};\ p = 0 & \text{if FSS} \end{cases} \tag{1}$$

where $i_{vsc}^{\max}$ is the converter nominal current, p_{ref} and q_{ref} are references for active and reactive power. The reactive power element is prioritized in a current saturation state (PSS and FSS).

It should be noticed that typically the power references are assigned with a constant dispatched value for normal operation. During the fault, the optional grid-support scheme can be included in converter control, which modifies the reactive power reference such that:

$$q_{ref} = u[i_{d0} + k_{isp}(u_{ref-gs} - u)] \tag{2}$$

where i_{d0} is the frozen pre-fault reactive current, k_{isp} and u_{ref-gs} are droop gain and voltage reference for grid-support control.

The VSC in PV control also has three current saturation states, which yields the equivalent model as follows:

$$\begin{cases} p = p_{ref};\ u = u_{ref-PV} & \text{if USS} \\ i = i_{vsc}^{\max};\ u = u_{ref-PV} & \text{if PSS} \\ i = i_{vsc}^{\max};\ p = 0 & \text{if FSS} \end{cases} \tag{3}$$

where u_{ref-PV} is the voltage reference for PV control. Similarly, the reactive current element is also prioritized in a current saturated state.

The GFM converter's operation can be divided into only two current saturation states. This is because it does not regulate directly the active or reactive power elements. Therefore, the PSS does not apply to the GFM converter. The equivalent model is expressed as follows:

$$\begin{cases} u = u_{ref};\ \theta_u = \theta_{ref} & \text{if USS} \\ i = i_{vsc}^{\max};\ \theta_u = \theta_{ref} & \text{if FSS} \end{cases} \tag{4}$$

where u_{ref} is the voltage reference for the GFM converter, θ_u and θ_{ref} are the voltage angle and its reference value. It is assumed that the GFM unit imposes the reference angle to the studied system. However, other saturation options can be considered where this reference angle can be aligned to any phasor and the resulted system formulations are equivalent.

It should be noticed that different options of converter control can be adopted in different applications. For instance, the GFL converter can prioritize the active current in PSS and FSS; the GFM converter can also provide grid voltage support current during the fault. These different options are not explicitly presented in this paper due to the limited space. However, the corresponding VSC equivalent model can be similarly drawn from the governing equations implemented in converter control for a specific application. Then, different equivalent model can be equally included in the system formulation presented later in Section 2.3.

2.2. Equivalent model of non-power electronics elements

The equivalent model of conventional generators and loads has been established in the existing standards for short-circuit calculation. In particular, various options can be adopted to model the conventional loads as chosen by the user: PQ loads, Z loads, I loads, IZ loads (modeled as current source for active power and impedance for reactive power), etc. These different options can be covered by the formulation and methodology for short-circuit calculation presented in this paper. In the presented case studies, the load is modeled with the equivalent impedance, which is quantified under the pre-fault voltage condition such that:

$$\underline{z}_{ld} = \left(\frac{u_{no}^2}{p_{ld} + jq_{ld}}\right)^* = \frac{u_{no}^2}{p_{ld} - jq_{ld}} \tag{5}$$

where u_{no} is the pre-fault voltage at the bus where a load is connected, p_{ld} and q_{ld} are the active and reactive power references of the load.

Synchronous generators have a slow dynamic response. As a result, they keep a constant rotor speed and voltage during the fault.

Table 1
Regulated variables of power converters.

Converter state	PQ	PV	GFM
USS	p, q	p, u	u, θ_u
PSS	q, i	u, i	/
FSS	p, i	p, i	i, θ_u

Synchronous generators are typically modeled with the Thévenin equivalent or Norton equivalent for short-circuit calculation [11,12,32]. In this paper, the Norton equivalent is adopted to model the synchronous generator for short-circuit calculation as it reduces the number of nodes in system formulation compared to the Thévenin equivalent expression. In particular, the Norton equivalent current of a synchronous generator, $\underline{i}_{eq}$, can be calculated from the pre-fault equilibrium point such that [33]:

$$\underline{i}_{eq} = \underline{u}_{no}/\underline{z}_{eq} + \underline{i}_{no} \tag{6}$$

where $\underline{z}_{eq}$ Norton equivalent impedance, which is equal to the synchronous reactance of the generator, $\underline{i}_{no}$ is the current injection from the generator in pre-fault condition. If multiple synchronous generators are presented in the studied system, the respective Norton equivalents are obtained with the current angle calculated from the power flow previous to the studied fault.

2.3. Studied system formulation for short-circuit calculation

Conventional programs for short-circuit calculation adopt a linear model to formulate power converters while ignoring different control modes and various potential current saturated states. As an alternative, this paper adopts a non-linear and piece-wise formulation to achieve an accurate short-circuit calculation.

The steady-state formulation for short-circuit calculation includes the circuit model and additional constraints modeling the operation of power electronics and non-power electronics elements during the fault. The present paper suggests to model converters as they are behaving in real systems and avoid using the simplified model with a current source expression.

In particular, the VSC equivalent model combines a specific control mode (PQ, PV or GFM) and various current saturation states as expressed in Section 2.1. Therefore, they impose different constraints in the formulation for short-circuit calculation as shown in Table 1. It should be also noticed that with different options in converter control, the VSC will imply a different constraint. However, the same set of variables are always defined independently of different options in control implementation. Therefore, the presented system formulation can be adjusted to cover the application with a specific converter control implementation by obtaining the corresponding VSC equivalent model.

Different systems of equations are obtained to model the studied system corresponding to various current saturation states of power converters. The studied system with N converters yields G possible combinations of converters current saturation states such that: $G = 2^{N_{GFM}} \times 3^{N_{GFL}}$, where N_{GFM} and N_{GFL} respectively denote the number of converters operating in GFM and GFL modes in the studied system.

Then, the studied system formulation corresponding to each combination $g \in [1, G]$, can be expressed as in the following set of equations SE_g:

$$SE_g := \begin{cases} I = YU \\ H_g = \begin{bmatrix} h_{1-g} & \cdots & h_{N-g} \end{bmatrix}^T \end{cases} \tag{7}$$

where U is the vector of the studied grid voltages, I is the vector of current injections. The load impedance, Norton equivalent impedance of synchronous generators as well as the short-circuit fault impedance should be also included in the admittance matrix Y. The subset of equations h_{n-g} models an element n (which can be power electronics or non-power electronics) for $n \in [1, N]$ corresponding to the combination g following the constraints shown in Section 2.1 while N is the total number of elements in the studied system.

3. Proposed methodology for short-circuit calculation

This Section introduces the methodology for short-circuit calculation of power systems with power electronics converters. Firstly, an extended Newton–Raphson (NR) solver is introduced to calculate the established system formulation. Then, an iterative algorithm is presented to identify the current saturation state of all converters for a specific fault condition.

3.1. Extended NR solver for short-circuit calculation

The established set of equations, SE_g, will be solved for several or all combinations, $g \in [1, G]$, in order to find the short-circuit equilibrium point. Each obtained set of equations SE_g, unlike the linear formulation adopted in conventional short-circuit calculation program, involves a set of non-linear equations, which is like the formulation for power flow calculation. Therefore, a non-linear equations solver is required to find the solution from each tested SE_g.

NR approach has been widely adopted for power flow analysis as it allows to deal with large-scale systems with thousands of nodes. The NR approach for conventional power system analysis defines only three categories of electric nodes (slack bus, PQ node and PV node) depending on the control mode of each element contained in the studied system [32,34]. However, the penetration of power converters introduces new categories of nodes (PI, QI, VI and IΘ) as shown in Table 1, which are not included in the NR solver for power flow analysis. The NR solver for conventional power flow calculation has been adopted for short-circuit calculation of systems with power converters in the literature [35–37]. In particular, the short-circuit studies presented in [35–37] rely on an outer loop to modify the converters' reference following the grid-support control and current saturation deployed in converter control. However, an extended NR solver that could directly solve the short-circuit formulation of power electronics dominated systems is more efficient, especially for the studied grid with converters in different control modes.

In this Section, the NR solver has been extended for short-circuit calculation of power systems with power electronics. By definition, at each iteration the NR solver looks for a solution to:

$$\mathbf{F} = -\mathbf{J}\mathbf{\Delta X} \tag{8}$$

where $\mathbf{F}$ is the vector of residuals, $\mathbf{J}$ is the Jacobian matrix and $\mathbf{\Delta X}$ is the vector of unknowns. The construction of these three objects is detailed below.

3.1.1. Vector of residuals F

The vector of residuals contains the mismatches between the imposed set points and the real values. For power flow analysis, $\mathbf{F}$ is typically built from the active and reactive power residuals. The newly introduced types of nodes (PI, QI, VI and IΘ) also defines the current injection magnitude. In order to cope with that, the squared value of the current injection, I^2, is selected as it is more convenient to obtain the derivatives compared to the expression with its absolute value, $|I|$. The resulted residual vector can be expressed as follows:

$$\mathbf{F} = [f_{P_S}, f_{Q_S}, f_{I^2_S}] \tag{9}$$

where f_{P_S}, f_{Q_S} and $f_{I^2_S}$ are the sliced active, reactive and squared current magnitude residuals. The sliced attribute, identified with the subindex s, is used to denote that their length is inferior to the total number of buses m. In other words, these vectors are constructed by first computing them for all buses, and then only the buses where this reference applies are selected. The set of buses to consider for each kind of residual are:

$$\begin{cases} b_P = [\text{PQ}, \text{PV}, \text{PI}] \\ b_Q = [\text{PQ}, \text{QI}] \\ b_{I^2} = [\text{QI}, \text{VI}, \text{PI}, \text{I}\Theta] \end{cases} \tag{10}$$

where b_P specifies the bus indices for the active power residual, b_Q contains the indices for the reactive power residual, and b_{I^2} includes the indices for the squared current magnitude residual. The complete residuals, each with length of m, can be calculated as follows:

$$\begin{cases} f_P = -P_{ref} + \underbrace{\Re([U]Y^*U^*)}_{P} \\ f_Q = -Q_{ref} + \underbrace{\Im([U]Y^*U^*)}_{Q} \\ f_{I^2} = -I_{ref}^2 + [I]I^* \end{cases} \tag{11}$$

where P_{ref} and Q_{ref} are vectors of active and reactive power references, P and Q are vectors of active and reactive net power injections, $I_{ref} = I_{vsc}^{\max}$ is the vector of the current injection magnitudes, the operator $\Re$ and $\Im$ extract the real and imaginary parts of a complex element, and the term of the form $[X]$ generates the diagonal matrix of a vector X. Then, the sliced residuals are simply:

$$\begin{cases} f_{Ps} \leftarrow f_P[b_P] \\ f_{Qs} \leftarrow f_Q[b_Q] \\ f_{I^2s} \leftarrow f_{I^2}[b_{I^2}] \end{cases} \tag{12}$$

where the operation of the form $z \leftarrow x[y]$ implies that z is a vector formed by the values of x with index in y.

3.1.2. Vector of unknowns $\mathbf{\Delta X}$

The indices to consider for the unknowns in the extended NR formulation are:

$$\begin{cases} b_\Theta = [\text{PQ}, \text{PV}, \text{PI}, \text{QI}, \text{VI}] \\ b_V = [\text{PQ}, \text{PI}, \text{QI}, \text{I}\Theta] \end{cases} \tag{13}$$

Hence, the slicing of the unknowns can be expressed as:

$$\begin{cases} \Theta_s \leftarrow \Theta[b_\Theta] \\ V_s \leftarrow V[b_V] \end{cases} \tag{14}$$

3.1.3. Jacobian matrix $\mathbf{J}$

The general formulation of the iterative solver expressed in (8) can be expanded as follows:

$$\underbrace{\begin{pmatrix} f_{Ps} \\ f_{Qs} \\ f_{I^2s} \end{pmatrix}}_{\mathbf{F}} = -\underbrace{\begin{pmatrix} J_{1s} & J_{2s} \\ J_{3s} & J_{4s} \\ J_{5s} & J_{6s} \end{pmatrix}}_{\mathbf{J}} \underbrace{\begin{pmatrix} \Delta\Theta_s \\ \Delta V_s \end{pmatrix}}_{\mathbf{\Delta X}} \tag{15}$$

where elements J_{1s} to J_{6s} are sub-matrices that form the full Jacobian $\mathbf{J}$. Each entry from the Jacobian matrix $\mathbf{J}$ can be expressed as follows:

$$\begin{cases} J_1 = \frac{dP}{d\Theta} = \Re\{j[U]([YU]^* - Y^*[U]^*)\} \\ J_2 = \frac{dP}{dV} = \Re\{[U]([YU]^* + Y^*[U]^*)\}[V]^{-1} \\ J_3 = \frac{dQ}{d\Theta} = \Im\{j[U]([YU]^* - Y^*[U]^*)\} \\ J_4 = \frac{dQ}{dV} = \Im\{[U]([YU]^* + Y^*[U]^*)\}[V]^{-1} - \frac{dQ_{ref}}{dU} \\ J_5 = \frac{dI^2}{d\Theta} = [I]\left(\frac{dI}{d\Theta}\right)^* + [I]^*\left(\frac{dI}{d\Theta}\right) = 2\Re\left([I]\left(\frac{dI}{d\Theta}\right)^*\right) \\ J_6 = \frac{dI^2}{dV} = [I]\left(\frac{dI}{dU}\right)^* + [I]^*\left(\frac{dI}{dU}\right) = 2\Re\left([I]\left(\frac{dI}{dU}\right)^*\right) \end{cases} \tag{16}$$

The unknown derivative elements in (16), $dI/d\Theta$ and dI/dU, can be expressed as follows:

$$\begin{cases} dI/d\Theta = j(Y[U] - [S]^*[U^*]^{-1}) \\ dI/dV = ([S]^*[U^*]^{-1} + Y[U])[V]^{-1} \end{cases} \tag{17}$$

where $S = P + jQ$ is the vector of net power injection.

The derivative expression in (16), dQ_{ref}/dU, contains the derivatives of reactive power reference value to the voltage magnitude. It should be noticed that for a node with a constant reactive power reference, the corresponding derivative element is equal to zero. However, for a node with a voltage-dependent reactive power reference (e.g. the VSC with a voltage-support scheme as expressed in (2)), the resulted derivative, dQ_{ref}/dU, is expressed as follows:

$$dQ_{ref}/dU = [I_{d0}] + [K_{isp}][U_{ref-gs}] + 2[K_{isp}][V] \tag{18}$$

where I_{d0}, K_{isp} and U_{ref-gs} respectively denote the vector of the frozen pre-fault reactive currents, i_{d0}, the droop gains, k_{isp}, and the voltages reference for grid voltage support control, u_{ref-gs} as expressed in (2). The constants in $I_{d\theta}$ and in K_{isp} are set to zero in those buses without a voltage-droop characteristic.

The matrices to employ in the proposed NR solver are sliced as:

$$\begin{cases} J_{1s} \leftarrow J_1[b_P, b_\Theta] \\ J_{2s} \leftarrow J_2[b_P, b_V] \\ J_{3s} \leftarrow J_3[b_Q, b_\Theta] \\ J_{4s} \leftarrow J_4[b_Q, b_V] \\ J_{5s} \leftarrow J_5[b_{I^2}, b_\Theta] \\ J_{6s} \leftarrow J_6[b_{I^2}, b_V] \end{cases} \tag{19}$$

where the slicing of the form $z \leftarrow x[y_1, y_2]$ indicates that z is a matrix that takes values from x whose row and column indices are respectively specified in y_1 and y_2.

The extended NR method to solve the power system formulation is summarized in Algorithm 1, which is defined as the function *solve*. In particular, the required input information includes the studied system formulation, SE_g, the initial guess of the studied grid voltage $\mathbf{X_0} = [\Theta_0, U_0]^T$, the tolerance of computing accuracy tol and the maximum iteration number of the NR solver $n_{it}^{\max}$. The presented NR solver starts with the initial condition $\mathbf{X_0}$. In each iteration, the residual vector $\mathbf{F}$ and the Jacobian matrix $\mathbf{J}$ are updated. Then, the variation of unknowns, $\mathbf{\Delta X}$, is calculated. The iterative process will be continued until the convergence is achieved with the desired accuracy or the maximum iteration number has been reached. In particular, the absolute value of elements in the residual vector, $\mathbf{F}$, is adopted as an index of error to determine whether the obtained solution meets the required accuracy. The extended NR solver has a quadratic convergence as the regular NR algorithm for power flow calculation.

Algorithm 1: *solve* - Extended NR solver

```
input  : System formulation SE_g, initial voltage condition X_0,
         tolerance of computing accuracy tol, maximum iteration
         number n_it^max.
output: Identified solution sol.
begin
    X = X_0; n_it = 0;
    while n_it ≤ n_it^max & max(|F|) > tol do
        obtain F following (11) and (12);
        obtain J following (16) and (19);
        ΔX = −J^{-1}F;  X = X + ΔX;  n_it = n_it + 1;
    end
    return sol = X;
    if n_it == n_it^max then
        return 'no solution';
    end
end
```

3.2. Iteration of converters current saturation states

The current saturation states of power converters in the studied system are usually uncertain for a specific short-circuit fault condition. In other words, the short-circuit equilibrium point might exist for any of the G combinations of converters' current saturation states. A

generic approach is to explore all the G combinations and solving the corresponding system of equations in order to find the short-circuit equilibrium point that satisfies the operation limits of all converters [27,28]. However, this approach is limited for the studied system with only a few converters due to the high computing demand. To deal with this challenge, an iterative algorithm has been proposed in this paper that tests only selected combinations in order to find the short-circuit equilibrium point efficiently.

The proposed methodology tests only one combination, g, and solve the corresponding system of equations, SE_g, for each iteration. The combination of the upcoming iteration, $n_t + 1$, is updated based on the solution obtained from the current iteration, n_t, sol. In particular, the iteration rule is designed based on the operation limits of converters. Only the current saturation states of those converters whose operation limits are violated will be modified in the upcoming iteration.

A function *update* is defined to update the current saturation states of all converters in the studied system as shown in Algorithm 2. The set of all converters' control modes, Γ, is required as the input information of this function as the iteration rule differs from different control, which can be expressed as follows:

$$\Gamma = [\gamma_1 \quad \cdots \quad \gamma_m \quad \cdots \quad \gamma_M] \tag{20}$$

where $\gamma_m \in \{PQ, PV, GFM\}$ denotes the control mode of the converter $m \in [1, M]$ and M is the total number of power converters in the studied system.

Also, the set of all converters' current saturation states tested in the previous iteration, Ψ_{n_t}, is required as the input for the *update* function, which can be expressed as follows:

$$\Psi_{n_t} = [\psi_{n_t}^1 \quad \cdots \quad \psi_{n_t}^m \quad \cdots \quad \psi_{n_t}^M] \tag{21}$$

where $\psi_{n_t}^m \in \{USS, PSS, FSS\}$ is the current saturation state of converter $m \in [1, M]$ and corresponding to a iteration number n_t.

Other input information of the established *update* function includes the solution of system equilibrium point obtained from the previous iteration, sol. Then, this function updates the current saturation states of all the M converters in the studied system considering the operation limits for different converter control modes.

In particular, the current saturation states of converters in PQ control are updated based on their terminal voltage magnitudes. The VSC is switched to a current saturated state (PSS or FSS) with a reduced terminal voltage during the fault as the power references, $p_{ref} + jq_{ref}$, cannot be achieved with limited current capacity.

The iteration rule of converters in PV control involves both the solution of system equilibrium point and the current saturation state tested in the previous iteration. For the solution obtained with USS, the current saturation state of the upcoming iteration is selected based on the converter's overloading level, which is similar to the iteration of converters in PQ control. For the solution obtained with PSS, the converter will be switched to USS if the active power injection magnitude is higher than the reference value. If the solution cannot be obtained from the system of equations corresponding to the PSS operation of a converter in PV control (i.e. the *solve* function shown in Algorithm 1 returns 'no solution'), this converter will be switched to FSS. Finally, if the solution obtained with FSS provides a converter terminal voltage higher than its reference value, the converter will be switched back to PSS in the next iteration.

The operation limits of the GFM converter are set based on the current injection magnitude for USS and the voltage magnitude for FSS. Once the mentioned limits are exceeded, the current saturation states of the GFM converter will be switched.

3.3. Overall procedure for short-circuit calculation

The overall procedure to identify the short-circuit equilibrium point is summarized as shown in Algorithm 3. The required input includes the admittance matrix of the studied system, Y, the set of equations modeling power electronics and non-power electronics elements operation, H, an initial set of converters' current saturation states, Ψ_0, the maximum number of outer loop iteration, $n_t^{\max}$, and the set of converters control mode, Γ. Besides, the input parameters of internal NR solver shown in Algorithm 1, $\mathbf{X_0}$, tol and $n_{it}^{\max}$, are also required by the proposed methodology.

The computing program starts with an initial set, Ψ_0, which can be defined by the user. In this paper, such initial state is selected corresponding to all converters in USS for example. Then, the system of equations modeling the studied system, SE_g, is defined based on the combination number, g, which is obtained from the set of converters' current saturation states, Ψ_{n_t}. The established system formulation, SE_g, will be solved by the *solve* function, which is defined as shown in Algorithm 1. Then, based on the obtained solution, sol, the current saturation states of all converters in the studied system will be updated with the *update* function, which is defined as shown in Algorithm 2. When the updated states of power converters are the same as the states tested in the current iteration such that $\Psi_{n_t+1} = \Psi_{n_t}$, the obtained solution can be identified as the short-circuit equilibrium point that satisfies all converters' operation limits. Then the identified equilibrium point will be returned and the short-circuit calculation program will be terminated.

Algorithm 2: *update* - Function to update converters' current saturation states

input : Set of converters control mode Γ, solution from previous iteration sol, tested set of converters current saturation states Ψ_{n_t}.
output: Ψ_{n_t+1}.

```
begin
    M = length(Ψ_{n_t});// No. of Converters
    for m ← 1 to M do
        if γ_m ==PQ then
            if |p_ref+jq_ref|/i_vsc^max ≤ u then ψ_{n_t+1}^m = USS;
            else if |q_ref|/i_vsc^max ≤ u < |p_ref+jq_ref|/i_vsc^max then
                ψ_{n_t+1}^m = PSS;
            else ψ_{n_t+1}^m = FSS;
        end
        if γ_m ==PV then
            if ψ_{n_t}^m == USS then
                if |q|/i_vsc^max < u < |p+jq|/i_vsc^max then
                    ψ_{n_t+1}^m = PSS;
                else if i_vsc^max < |q|/u then ψ_{n_t+1}^m = FSS;
                else ψ_{n_t+1}^m = USS;
            else if ψ_{n_t}^m == PSS then
                if |p| > |p_ref| then ψ_{n_t+1}^m = USS;
                else if nosolution then ψ_{n_t+1}^m = FSS;
                else ψ_{n_t+1}^m = PSS;
            else if ψ_{n_t}^m == FSS then
                if u > u_ref−PV then ψ_{n_t+1}^m = PSS;
                else ψ_{n_t+1}^m = FSS;
        end
        if γ_m ==GFM then
            if ψ_{n_t}^m == USS then
                if i > i_vsc^max then ψ_{n_t+1}^m = FSS;
                else ψ_{n_t+1}^m = USS;
            else if ψ_{n_t}^m == FSS then
                if u > u_ref then ψ_{n_t+1}^m = USS;
                else ψ_{n_t+1}^m = FSS;
        end
        return ψ_{n_t+1} = [ψ_{n_t+1}^1 ··· ψ_{n_t+1}^M];
    end
end
```

Algorithm 3: Methodology for short-circuit calculation

input : Admittance matrix Y, Set of constraint equations H, initial set of converters saturation states Ψ_0, maximum iteration number $n_t^{\max}$, set of converters control modes, Γ, input for the NR solver: $\mathbf{X_0}$, tol and $n_{it}^{\max}$.

output: Identified equilibrium point EP.

```
begin
    n_t = 0;
    while (n_t ≤ n_t^max) & (Ψ_{n_t+1} != Ψ_{n_t}) do
        get g from Ψ_{n_t}; define SE_g with Y and H_f;
        sol = solve(SE_g, X_0, tol, n_it^max);
        Ψ_{n_t+1} = Update(Γ, sol, Ψ_{n_t});
        G_t(n_t) = g;  // save tested comb. No.
        if find(g ∈ G_t) then
            Ψ_{n_t+1} = Ψ_new; // break infinite loop
        end
        n_t = n_t + 1;
    end
    return EP = sol;
    if n_t == n_t^max then  return 'no equilibrium point' ;
end
```

In addition, the possibility of infinite loop is considered in the proposed algorithm of converters current saturation states iteration. In particular, the combination number tested in each iteration will be recorded. In case the updated combination number is repeated with any of the recorded number, the program will be interrupted to assign a new set of converters' current saturation states to continue the calculation. In particular, this new set of current saturation states can, Ψ_{new}, can be defined by the user or randomly selected from the combinations that have not been tested yet [29].

4. Numerical case studies

In this Section, the proposed methodology has been adopted for short-circuit calculation of several test systems with VSCs.

4.1. Test system 1: System with VSCs in different control modes

The first test system is built based on the CIGRE European MV distribution system benchmark model [38] with the scheme shown in Fig. 1. This test system is operating isolated from the main grid. Three VSCs are included in the studied which are respectively operating in GFM, PQ and PV modes following the equivalent model expressed in 2.1. The VSCs parameters of this test system are shown in Table 10 from Appendix.

Short-circuit has been tested at bus 12 (as the fault location indicated in Fig. 1). Firstly, the short-circuit is tested with a moderate fault by inserting the fault impedance $\underline{z}_{ft} = j0.2$ pu. The solutions obtained from each iteration of converters' current saturation states (which is obtained by the *update* function shown in Algorithm 2) are listed in Table 2. In particular, the solution that is identified as invalid is marked in gray and the specific values that violates the converters' limits are highlighted in red.

The calculation initializes with all converters in USS in the first iteration. The obtained solution is invalid as it violates the current-limitation of VSC2 and VSC3 as shown in Table 2. Then, following the iteration rule shown in Algorithm 2, VSC2 and VSC3 are switched to FSS and PSS respectively in the second iteration from the outer loop. VSC1 remained in USS as its operation limits are not violated with the solution obtained in the first iteration. The solution obtained in iteration 2 is validated as the short-circuit equilibrium point that satisfies all converters' limits in the studied system and the computation program is terminated.

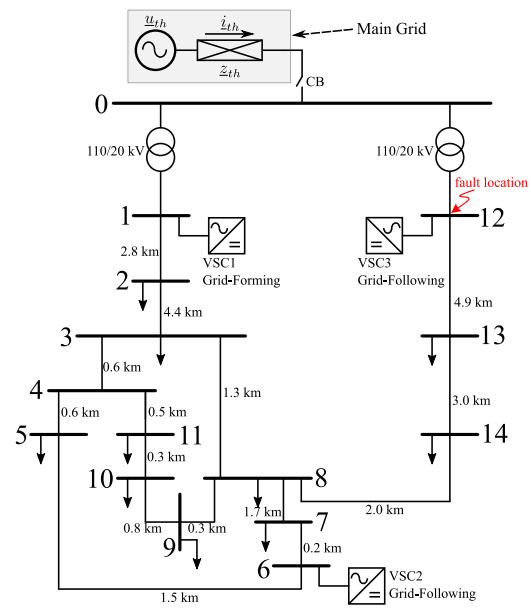

Fig. 1. Scheme of Test System 1.

Table 2
Solutions for each iteration corresponding to the fault at Test System 1 with $\underline{z}_{ft} = j0.2$ pu.

Solutions	Iteration 1	Iteration 2
VSC1 state	USS	USS
VSC2 state	USS	FSS
VSC3 state	USS	PSS
i_{vsc1}	2.412	2.204
$\underline{u}_1$	$1\angle 0°$	$1\angle 0°$
i_{vsc2}	2.730	1
p_{vsc2}	−0.794	0
$\underline{u}_6$	$0.96\angle -10.6°$	$0.912\angle -2.6°$
i_{vsc3}	1.231	1
p_{vsc3}	−0.800	−0.572
q_{vsc3}	0.385	0.403
$\underline{u}_{12}(\underline{u}_{ft})$	$0.722\angle -5.7°$	$0.700\angle -0.1°$
Satisfying all converters' operation limits?	×	✓

Dynamic (EMT) simulation has been implemented in MATLAB-Simulink in order to validate the identified short-circuit equilibrium point. In particular, the short-circuit impedance of $\underline{z}_{ft} = j0.2$ pu is inserted to bus 12 at the time of 1 s, which represents the disturbance to the studied system. The time-domain results in terms of converter connection point (CCP) voltage magnitudes, VSC current injection magnitudes and VSC power injections are plotted as shown in Fig. 2. The identified short-circuit equilibrium point is also marked black dashed lines in Fig. 2. It can be observed that the time-domain results exhibit the same equilibrium point as calculated from steady-state short-circuit calculation shown in Table 2. In particular, the difference between the identified short-circuit equilibrium point and dynamic simulation result is lower than 0.001 pu in terms of all variables shown in Fig. 2, which proves the accuracy of the proposed methodology in this case.

Then, short-circuit calculation has been repeated with a more severe fault by inserting a lower fault impedance $\underline{z}_{ft} = j0.05$ pu at the same fault location indicated in Fig. 1. The obtained solutions in each iteration of converters' current saturation states are shown in Table 3. The solution obtained in Iteration 1, which corresponds to the USS operation of all the three converters, is invalid the three converters are

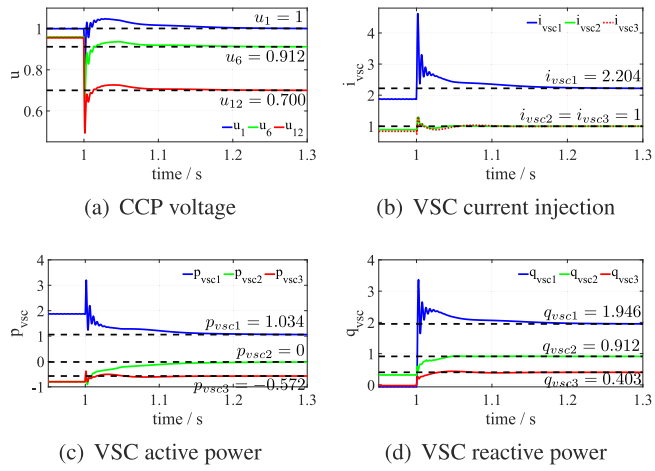

(a) CCP voltage (b) VSC current injection

(c) VSC active power (d) VSC reactive power

Fig. 2. Dynamic simulation with $\underline{z}_{ft} = j0.2$ at Test System 1.

Table 3
Solutions for each iteration corresponding to the fault at Test System 1 with $\underline{z}_{ft} = j0.05$ pu.

Solutions	Iteration 1	Iteration 2
VSC1 state	USS	FSS
VSC2 state	USS	FSS
VSC3 state	USS	FSS
i_{vsc1}	4.507	2.5
$\underline{u}_1$	$1\angle 0°$	$0.556\angle 0°$
i_{vsc2}	6.254	1
p_{vsc2}	−0.794	0
$\underline{u}_6$	$0.96\angle -21.9°$	$0.454\angle -2.7°$
i_{vsc3}	2.294	1
p_{vsc3}	−0.800	0
q_{vsc3}	0.472	0.222
$\underline{u}_{12}$ ($\underline{u}_{ft}$)	$0.405\angle -8.7°$	$0.222\angle 10.4°$
Satisfying all converters' operation limits?	×	✓

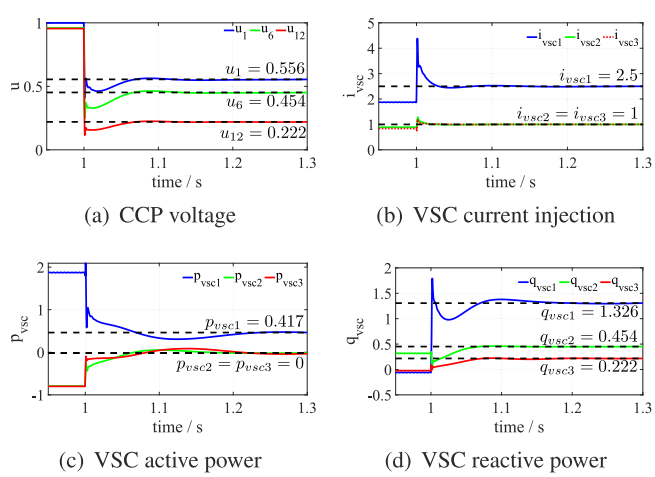

(a) CCP voltage (b) VSC current injection

(c) VSC active power (d) VSC reactive power

Fig. 3. Dynamic simulation with $\underline{z}_{ft} = j0.05$ at Test System 1.

all heavily overloaded and exceeds the maximum current. Therefore, the converters in the studied system are switched to FSS in the second iteration, where the short-circuit equilibrium point is identified. The identified short-circuit equilibrium point can be also validated with dynamic simulation results, which are shown in Fig. 3. Similarly, the time-domain results from dynamic simulation exhibit the same steady-state value compared to the identified short-circuit equilibrium point with the error less than 0.001 pu.

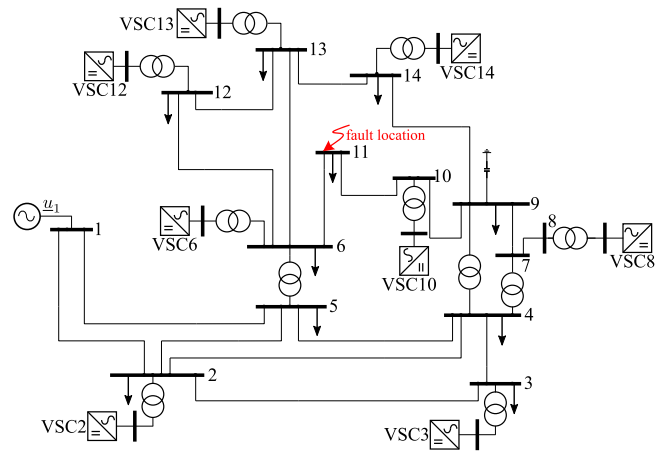

Fig. 4. Scheme of Test System 2.

Table 4
Short-circuit calculation results of Test System 2 with 25% of VSCs.

Method	I_{ft} (kA)	Error (%)	Modeling of VSC
This paper	1.706	0	Comprehensive model
VDE0102	2.038	19.5	Current source
IEC60909	2.038	19.5	Current source
ANSI	1.827	7.1	Equivalent SG
Complete	6.478	279.7	Voltage source

Table 5
Short-circuit calculation results of Test System 2 with 50% of VSCs.

Method	I_{ft} (kA)	Error (%)
This paper	1.820	0
VDE0102	2.388	31.2
IEC60909	2.388	31.2
ANSI	2.136	17.4
Complete	6.446	254.2

4.2. Test system 2: Comparison with conventional short-circuit calculation programs

Test System 2 is built based on the IEEE 14 bus benchmark system [39]. In particular, 8 VSCs, which are connected to the grid through transformers, have been inserted into this studied system following the scheme shown in Fig. 4.

The VSCs in the studied system have the same size and are operated with the same dispatched power references following the parameters shown in Table 10 from Appendix. In particular, short-circuit has been tested with three different scenarios where VSCs provide 25%, 50% and 75% of total active power demands normal operation.

Short-circuit calculation has been tested with a bolted three-phase to ground fault (i.e. $u_{ft} = 0$) at bus 11 using the methodology proposed in this paper and the commercial short-circuit calculation program. In particular, various methods established in conventional standards for short-circuit calculation, which are implemented in DIgSILENT PowerFactory, have been tested. The steady-state short-circuit currents obtained with the methods presented in this paper and established in conventional short-circuit programs (which are implemented in PowerFactory) are respectively shown in Tables 4–6 for different scenarios as a comparison.

The steady-state calculation results have been compared with dynamic (EMT) simulation results, which are obtained from PowerFactory. In particular, the time-domain results in terms of short-circuit current magnitudes are shown in Fig. 5 for each analyzed scenario. The error of the short-circuit calculation results has been obtained in comparison with the steady-state equilibrium points exhibited from the

Table 6
Short-circuit calculation results of Test System 2 with 75% of VSCs.

Method	I_{ft} (kA)	Error (%)
This paper	1.761	0
VDE0102	2.684	52.4
IEC60909	2.684	52.4
ANSI	2.396	36.1
Complete	6.401	263.5

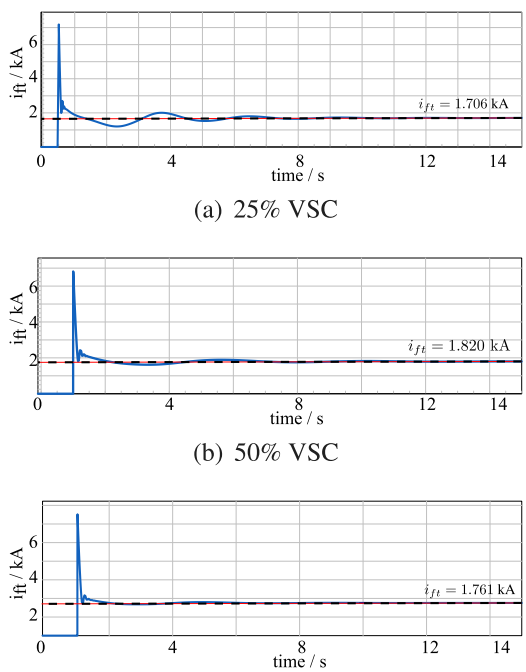

(a) 25% VSC
(b) 50% VSC
(c) 75% VSC

Fig. 5. Dynamic simulation of short-circuit current from Test System 2.

dynamic simulation results such that:

$$\text{error} = |\mathrm{I_{ft}} - \mathrm{I_{ft}^{sim}}|/\mathrm{I_{ft}^{sim}} \times 100\% \tag{22}$$

where I_{ft}^{sim} is the steady-state short-circuit current value obtained from dynamic simulations shown in Fig. 5. It can be observed that the methodology presented in this paper obtains the short-circuit equilibrium points that precisely match with dynamic simulation results. However, other methods implemented in PowerFactory overestimate the fault current in different levels in respect to the dynamic simulation results. This is especially critical for the scenario where the studied system has a high penetration level of converters as shown in Table 6.

4.3. Test system 3: Large-scale system with a few number of converters

The third test system is constructed based on a 2000-node synthetic grid on footprint of Texas [40,41]. In particular, three VSCs, which are all operating in PQ control mode, are inserted in different locations as indicated in the scheme shown in Fig. 6 and following the parameters shown in Table 10 from Appendix.

Short-circuit fault has been firstly tested at the CCP of VSC1 with the fault impedance $\underline{z}_{ft} = j0.05$ pu. During the fault, VSC1 is operating in PSS while the other two VSCs in USS as they have been located far from the fault location. RMS simulation has been implemented in PSS/E to validate the short-circuit calculation result. The short-circuit fault impedance is inserted at the time of 1 s. The time-domain results of the VSC1 CCP voltage magnitude, u_{con1}, (which is also the fault voltage) and power injections are shown in Fig. 7. The short-circuit equilibrium point obtained following the methodology presented in this paper is

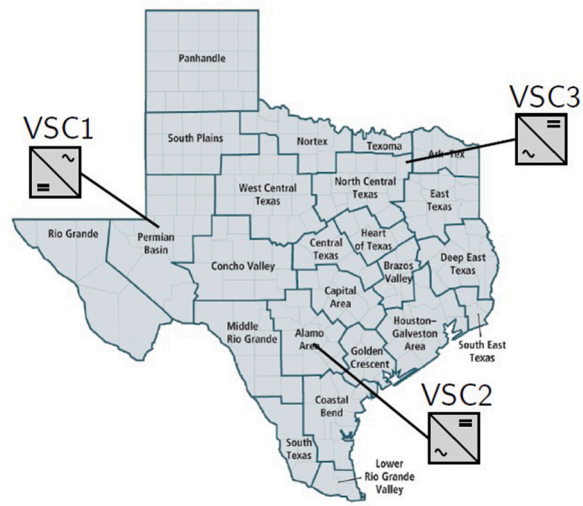

Fig. 6. Scheme of Test System 3.

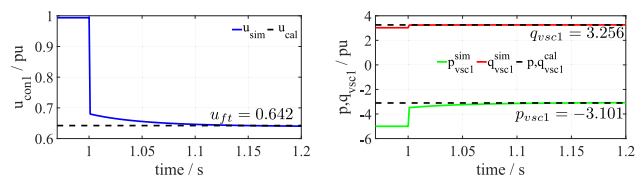

(a) Fault voltage magnitude (b) VSC1 power injection

Fig. 7. Dynamic simulation with $\underline{z}_{ft} = j0.05$ pu at Test System 3.

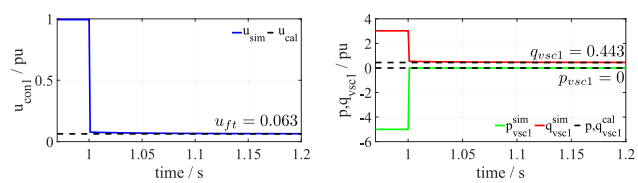

(a) Fault voltage magnitude (b) VSC1 power injection

Fig. 8. Dynamic simulation with $\underline{z}_{ft} = j0.002$ pu at Test System 3.

also marked in Fig. 7 with black dashed curves, which are precisely matched with the dynamic simulation results.

Then, the short-circuit calculation has been repeated with a lower fault impedance $\underline{z}_{ft} = j0.002$ pu. In this case, VSC1 is operating in FSS in order to prioritize reactive power with its full capacity during the fault as the dynamic simulation and steady-state calculation results shown in Fig. 8.

4.4. Test system 4: Large-scale system with a large number of converters

Test System 4 is also built based on the 2000-node synthetic Texas grid [40,41]. In this case, 50 VSCs in different control modes are randomly distributed replacing the synchronous generators at the same nodes from the original system as shown in Fig. 9.

The fault location has been selected at the node with 11 VSCs nearby following the parameters shown in Table 11 from Appendix. In this case, a resistive fault impedance, $\underline{z}_{ft}$, has been swept with 200 different magnitudes varied from 0.03 to 0.33 pu. Fig. 10 shows the CCP voltage magnitudes and current saturation states of the 11 VSCs close to the fault location corresponding to each tested fault impedance. It can be observed that with a lower fault impedance, the converters are more

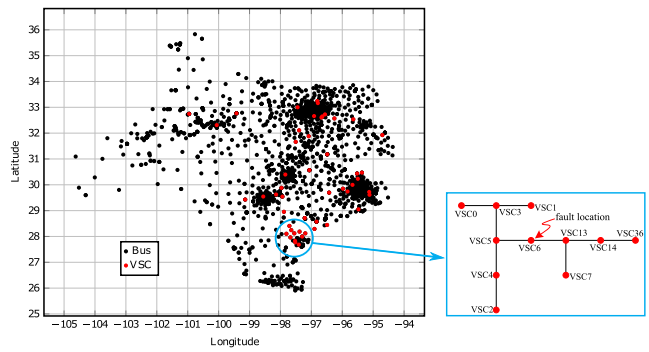

Fig. 9. Scheme of Test System 4.

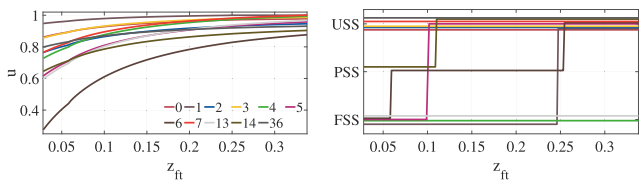

(a) Voltage magnitudes (b) Converter current saturation states

Fig. 10. Short-circuit calculation results sweeping various fault impedance values of Test System 4.

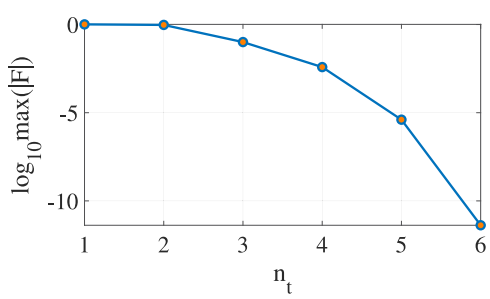

Fig. 11. Convergence of NR solver for Test System 4 with $z_{ft} = 0.1$ pu.

likely to operate in a current saturated state (PSS or FSS) in response to a reduced voltage.

Also, the convergence of the extended NR solver presented in this paper has been analyzed in this Test System. In particular, the calculation error in term of the common logarithm value of the maximum residual element, $\log_{10} \max(|F|)$, is shown in Fig. 11 for each iteration, n_t, with a fault impedance of 0.1 pu. The presented NR solver shows a fast convergence in this case and identifies the short-circuit equilibrium point after six iterations with a high accuracy ($tol < 1 \times 10^{-10}$).

4.5. Computing efficiency

The case studies of short-circuit calculation presented in this paper using the proposed methodology are implemented with Python 3.9 (including NumPy and SciPy library) and are executed in a laptop with Intel i7-11390H CPU and 16 GB RAM. The computing time for each test system analyzed in this paper are shown in Table 7. The same computing accuracy $tol = 1 \times 10^{-10}$ pu applies to all the presented case studies. For the test system where short-circuit calculation has been repeated several times (e.g. with various fault impedance values), the presented computing time takes the average value. As a comparison, the execution time of dynamic simulations of short-circuit events for various test systems presented in this paper has been also listed in Table 8. It can be observed that the steady-state approach presented in this paper shows significant advantage than dynamic analysis.

Table 7
Computing time of numerical case studies.

Test System	1	2	3	4
No. of nodes	15	22	2000	2000
No. of VSCs	3	8	3	50
Iteration of VSCs saturation states	2	2	2	2–3
Computing time (ms)	35	45	160	182

Table 8
Execution time of dynamic simulations presented in this paper.

Test System	1	2	3
Execution time (s)	20.5	2.6	10.7
Type of simulation	EMT	EMT	RMS
Software	MATLAB-Simulink	Power factory	PSS/E

Table 9
Computing time for short-circuit calculation of Test System 2 with PowerFactory.

Method	Computing time (ms)
VDE0102	17.8
IEC60909	22.7
ANSI	31.9
Complete	19.5

In addition, the computing time for short-circuit calculation implemented using DIgSILENT PowerFactory for Test System 2 presented in Section 4.2 has been listed in Table 9 for comparison. It can be noticed that although conventional programs achieve high computing efficiency at the cost of compromising the accuracy, the computing time of the solver presented in this paper is still comparable to existing commercial software.

The distribution system with a similar configuration of Test System 1 has been studied in another paper from the authors [28] where the short-circuit calculation takes 2 s, which is much slower than this paper. Compared to the methodology adopted for short-circuit calculation adopted in [28], the presented methodology shows two differences that results in an improved computing efficiency:

- Instead of using a generic algebraic equation solver, an extended NR solver has been developed that allows an efficient calculation of the established formulation modeling the studied system.
- An iterative approach is adopted that tests only selected combinations of converters' current saturation states. In particular, the iterative approach updates the converters' current-saturation states instead of modifying the current-reference values as presented in [24–26]. The later option might take several iterations for the same combination and therefore is less efficient.

Comparing the iteration number of converters' current saturation states among the four test systems studied in this paper, it can be observed that the presented algorithm can always find the proper set of current saturation states of all VSCs after the second or third iteration despite of different converters number. On the other side, the computing time increases with the expansion of studied system scale. This is because the extended NR solver requires higher computing efforts to find the solution of the established formulation modeling the studied system with more nodes and elements. However, the computing time is not proportional to the number of nodes or converters and the increase is limited with larger systems, which proves the efficiency and scalability of the proposed methodology.

5. Conclusion

This paper presents a new methodology for short-circuit calculation of power systems with power electronics converters. The operation

Table 10
VSC parameters in Test Systems 1, 2 and 3.

Parameter	Value	Parameter	Value
Test System 1			
u_{ref1}	1	$i_{vsc1}^{\max}$	2.5
p_{ref2}	−0.794	$u_{ref-PV2}$	0.96
$i_{vsc2}^{\max}$	1	p_{ref3}	−0.800
q_{ref3}	−0.023	$i_{vsc3}^{\max}$	1
k_{isp3}	2	$u_{ref-gs3}$	1
Test System 2			
p_{ref}	0.75	q_{ref}	0.008
$i_{vsc}^{\max}$	1	k_{isp}	0
$S_{base}^{25\%}$	11.3 MVA	$S_{base}^{50\%}$	22.7 MVA
$S_{base}^{75\%}$	34 MVA		
Test System 3			
p_{ref1}	−5	q_{ref1}	3.026
$i_{vsc1}^{\max}$	7	p_{ref2}	−1
q_{ref2}	0.973	$i_{vsc2}^{\max}$	2
p_{ref3}	6	q_{ref3}	1.458
$i_{vsc3}^{\max}$	8	k_{isp}	1
u_{ref-gs}	1		

Table 11
Parameters of VSCs close to the fault location in Test System 4.

VSC	p_{ref}	q_{ref}	$i_{vsc}^{\max}$
VSC0 ●	−0.849	0.256	1.268
VSC1 ●	0.127	/	1.028
VSC2 ●	−0.316	−0.419	0.723
VSC3 ●	0.895	0.251	1.389
VSC4 ●	0.172	/	1.371
VSC5 ●	−0.017	0.417	0.515
VSC6 ●	0.944	−0.600	1.345
VSC7 ●	−0.059	0.239	3.332
VSC13 ●	−0.180	/	1.566
VSC14 ●	−0.528	−0.404	1.153
VSC36 ●	0.109	−0.798	1.093

● Converters in PQ control.
● Converters in PV control.
$k_{isp} = 1$, $u_{ref-gs} = 1$ for all converters in PQ control. $u_{ref-PV} = 1$ for all converters in PV control.

of power converters in different control modes and various potential current saturation states are included in the formulation for short-circuit calculation. Then, a methodology has been proposed for efficient and effective identification of the short-circuit equilibrium point. In particular, an extended NR solver has been developed to adapt to the formulation of short-circuit calculation including the equivalent model of power converters with different control modes and various current saturation states. Then, an iterative algorithm has been presented in order to find the current saturation states of all converters in the studied system with a specific fault condition and therefore ensures that the identified short-circuit equilibrium points satisfies the converters' operation limits.

Numerical case studies have been presented for several test systems with VSCs in different control modes. The obtained results indicate that a significant error might exist with conventional short-circuit calculation programs in the system dominated by power electronics converters while the presented methodology can accurately identify the short-circuit equilibrium point, which has been validated with dynamic simulations. In addition, the presented methodology has been proved as efficient even for the large-scale system with many converters.

The presented methodology has been mainly tested for short-circuit calculation. However, it can be also adapted for other steady-state computational analyses where the operation and current saturation of power converters must be considered (e.g. contingency analysis). Further research work can be carried out to extend the presented methodology to include the unbalanced voltage conditions.

CRediT authorship contribution statement

Jie Song: Investigation, Methodology, Software, Writing – original draft. **Josep Fanals-Batllori:** Methodology, Software, Writing – original draft. **Leonardo Marín:** Software. **Marc Cheah-Mane:** Methodology, Writing – original draft. **Eduardo Prieto-Araujo:** Conceptualization, Writing – review & editing. **Eduard Bullich-Massagué:** Supervision. **Oriol Gomis-Bellmunt:** Conceptualization, Supervision, Writing – review & editing.

Declaration of competing interest

The authors declare that they have no known competing financial interests or personal relationships that could have appeared to influence the work reported in this paper.

Data availability

Data will be made available on request.

Appendix

VSCs parameters from the case studies presented in Section 4 are shown in Appendix. In particular, Table 10 shows parameters of Test System 1, 2 and 3 while Table 11 shows parameters of Test System 4.

References

[1] Bose Bimal K. Global energy scenario and impact of power electronics in 21st century. IEEE Trans Ind Electron 2013;60(7):2638–51.
[2] Zhang Bowen, Wang Mengqi, Su Wencong. Reliability analysis of power systems integrated with high-penetration of power converters. IEEE Trans Power Syst 2021;36(3):1998–2009.
[3] Barnes Mike, Van Hertem Dirk, Teeuwsen Simon P, Callavik Magnus. HVDC systems in smart grids. Proc IEEE 2017;105(11):2082–98.
[4] Habib Salman, Khan Muhammad Mansoor, Abbas Farukh, Ali Abdar, Faiz Muhammad Talib, Ehsan Farheen, Tang Houjun. Contemporary trends in power electronics converters for charging solutions of electric vehicles. CSEE J Power Energy Syst 2020;6(4):911–29.
[5] Gao Fang, Iravani M Reza. A control strategy for a distributed generation unit in grid-connected and autonomous modes of operation. IEEE Trans Power Deliv 2008;23(2):850–9.
[6] Power system relaying and control committee report of working group C-24 of the system protection subcommitee. IEEE PES TR78: Modification of commercial fault calculation programs for wind turbine generators, 2020.
[7] IEEE Power Engineering Society. IEEE Std C37.9-2008, Guide for Protecting Power Transformers. 2008.
[8] Leterme Willem, Heylen Evelyn. Rethinking power system protection analysis and setting: Introducing Bayesian analysis and decision theory. IEEE Trans Power Deliv 2023;1–10.
[9] Shabestary Masoud M, Mohamed Yasser Abdel-Rady I. An analytical method to obtain maximum allowable grid support by using grid-connected converters. IEEE Trans Sustain Energy 2016;7(4):1558–71.
[10] Krause Paul C, Wasynczuk Oleg, Sudhoff Scott D. Analysis of electric machinery and drive systems. Hoboken, NJ: Wiley; 2002.
[11] Saadat H. Power system analysis. McGraw-Hill; 2009.
[12] Chu Zhongda, Teng Fei. Short circuit current constrained UC in high IBG-penetrated power systems. IEEE Trans Power Syst 2021;36(4):3776–85.
[13] Das JC. Power system analysis: short-circuit load flow and harmonics. 2nd ed.. CRC Press; 2007, p. 1–42.
[14] Kim Insu. Short-circuit analysis models for unbalanced inverter-based distributed generation sources and loads. IEEE Trans Power Syst 2019;34(5):3515–26.
[15] (IEC) International Electrotechnical Commission. Short-circuit currents in three-phase AC systems - Part 4: Examples for the calculation of short-circuit currents (IEC 60909-4:2021). Technical report, IEC; 2021.
[16] Zhu Lin, Gu Huaiguang, Li Fangyuan, Kou Longze, Liu Dong. Analysis and calculation of the short-circuit current of xiamen VSC-HVDC project. In: 2021 IEEE 5th conference on energy internet and energy system integration (EI2). 2021, p. 820–5.
[17] Aljarrah R, Marzooghi H, Terzija V, Yu J. Issues and challenges of steady-state fault calculation methods in power systems with a high penetration of non-synchronous generation. In: 2019 IEEE milan powerTech. 2019, p. 1–6.
[18] Jia Ke, Liu Qian, Yang Bin, Zheng Liming, Fang Yu, Bi Tianshu. Transient fault current analysis of IIRESs considering controller saturation. IEEE Trans Smart Grid 2022;13(1):496–504.

[19] Yang Zhe, Zhang Qi, Liu Zhou, Chen Zhe. Fault current calculation for inverter-interfaced power sources considering saturation element. In: 2021 IEEE 4th international electrical and energy conference. CIEEC, 2021, p. 1–5.
[20] Liu Yushuang, et al. Short-Circuit Current Estimation of Modular Multi-level Converter Using Discrete-Time Modeling. IEEE Trans Power Electron 2019;34(1):40–5.
[21] Liu Qian, Jia Ke, Yang Bin, Zheng Liming, Bi Tianshu. Analytical model of inverter-interfaced renewable energy sources for power system protection. IEEE Trans Power Deliv 2022;1–9.
[22] Strezoski Luka, Prica Marija, Loparo Kenneth A. Generalized δ-circuit concept for integration of distributed generators in online short-circuit calculations. IEEE Trans Power Syst 2017;32(4):3237–45.
[23] Moura Ailson P, Lopes JA Peças, de Moura Adriano AF, Sumaili Jean, Moreira CL. IMICV fault analysis method with multiple PV grid-connected inverters for distribution systems. Electr Power Syst Res 2015;119:119–25.
[24] Kauffmann Thomas, Karaagac Ulas, Kocar Ilhan, Jensen Simon, Farantatos Evangelos, Haddadi Aboutaleb, Mahseredjian Jean. Short-circuit model for type-IV wind turbine generators with decoupled sequence control. IEEE Trans Power Deliv 2019;34(5):1998–2007.
[25] Zhou Niancheng, Wu Jiafang, Wang Qianggang. Three-phase short-circuit current calculation of power systems with high penetration of VSC-based renewable energy. Energies 2018;11(3).
[26] Teixeira Carlos Coelho, Leite Helder. Integration of voltage source converters in steady-state RMS short-circuit analysis. Energies 2021;14(12).
[27] Song Jie, Cheah-Mane Marc, Prieto-Araujo Eduardo, Gomis-Bellmunt Oriol. On the solution of equilibrium points of power systems with penetration of power electronics considering converter limitation. IEEE Access 2021;9:67143–53.
[28] Song Jie, Cheah-Mane Marc, Prieto-Araujo Eduardo, Gomis-Bellmunt Oriol. Short-circuit analysis of AC distribution systems dominated by voltage source converters considering converter limitations. IEEE Trans Smart Grid 2022;13(5):3867–78.
[29] Song Jie, Cheah-Mane Marc, Prieto-Araujo Eduardo, Gomis-Bellmunt Oriol. A novel methodology for effective short-circuit calculation in offshore wind power plants considering converter limitations. Electr Power Syst Res 2022;211:108352.
[30] Song Jie, Cheah-Mane Marc, Prieto-Araujo Eduardo, Gomis-Bellmunt Oriol. Short-circuit analysis of grid-connected PV power plants considering inverter limits. Int J Electr Power Energy Syst 2023;149:109045.
[31] Strezoski Luka, Prica Marija, Loparo Kenneth A. Sequence domain calculation of active unbalanced distribution systems affected by complex short circuits. IEEE Trans Power Syst 2018;33(2):1891–902.
[32] Grainger JJ, Stevenson WD. Power system analysis. Electrical engineering series, McGraw-Hill; 1994.
[33] Goswami SK. Synchronous-machine sudden 3-phase short-circuit. Analysis by norton's, constant-flux-linkage and thévenin's theorems. Proc Inst Electr Eng 1971;118. 1459–1466(7).
[34] Murty PSR. Chapter 10 - power flow studies. In: Murty PSR, editor. Power systems analysis (second edition). 2nd ed.. Boston: Butterworth-Heinemann; 2017, p. 205–76.
[35] Gautam PVPraveen, Joseph FrancisC. Evaluation of short circuit currents in networks with low voltage ride through (LVRT) enabled voltage source converters (VSC) based wind turbines. In: 2018 20th national power systems conference. NPSC, 2018, p. 1–6.
[36] Miao Weiying, Gao Houlei, Xu Bin. Calculation method of steady-state fault current for offshore wind farm. J Phys Conf Ser 2021;1885(4):042065.
[37] Van Tu Dao, Chaitusaney Surachai, Yokoyama Akihiko. Fault current calculation in distribution systems with inverter-based distributed generations. IEEJ Trans Electr Electron Eng 2013;8(5):470–7.
[38] Strunz K, Abbasi Ehsan, Fletcher Robert, Hatziargyriou Nikos, Iravani Reza, Joos Géza. TF C6.04.02 : TB 575 – Benchmark systems for network integration of renewable and distributed energy resources. CIGRE; 2014, p. 33–8.
[39] Illinois Center for a Smarter Electric Grid. IEEE 14-Bus System. 2023, https://icseg.iti.illinois.edu/ieee-14-bus-system/.
[40] Birchfield Adam B, Xu Ti, Gegner Kathleen M, Shetye Komal S, Overbye Thomas J. Grid structural characteristics as validation criteria for synthetic networks. IEEE Trans Power Syst 2017;32(4):3258–65.
[41] Birchfield Adam, et al. ACTIVSg2000: 2000-bus synthetic grid on footprint of Texas. 2023, https://electricgrids.engr.tamu.edu/electric-grid-test-cases/activsg2000/.