KENNESAW STATE UNIVERSITY

CS 4277
Recurrent Neural Network

Dr. Chen Zhao

czhao4@kennesaw.edu

Computer Science

College of Computing and Software Engineering

Learning Objectives

- RNN
- Computational graph of RNN
- LSTM

Introduction

Recurrent Neural Network (RNN)

- Sentiment Classification
- Image Captioning
- Language Translation

- RNNs can be used for mapping inputs to outputs of varying types, lengths and are fairly generalized in their application

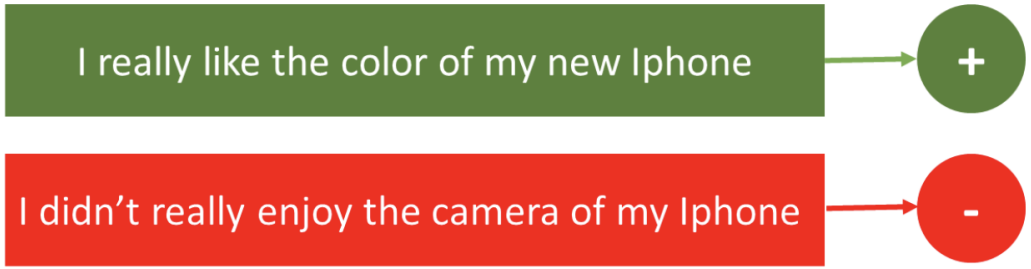

A person riding a motorcycle on a dirt road.

Two dogs play in the grass.

A group of young people playing a game of frisbee.

Two hockey players are fighting over the puck.

Recurrent Neural Network

- A Deep Learning approach for modelling sequential data is **Recurrent Neural Networks (RNN)**
- Data, where the order or the sequence of data is important, can be called sequential data.
- Example: Text, Speech, and time-series data are few examples of sequential data.

RNN: Process Sequences

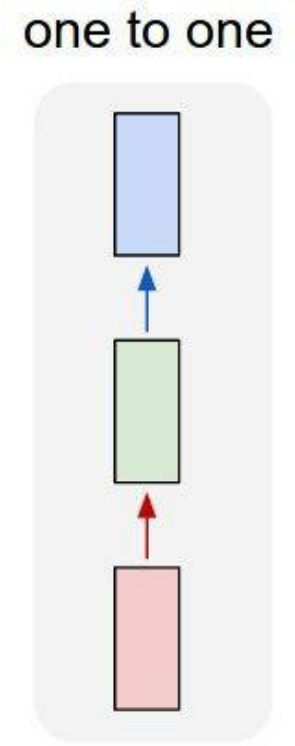

Vanilla Neural Networks

RNN: Process Sequences

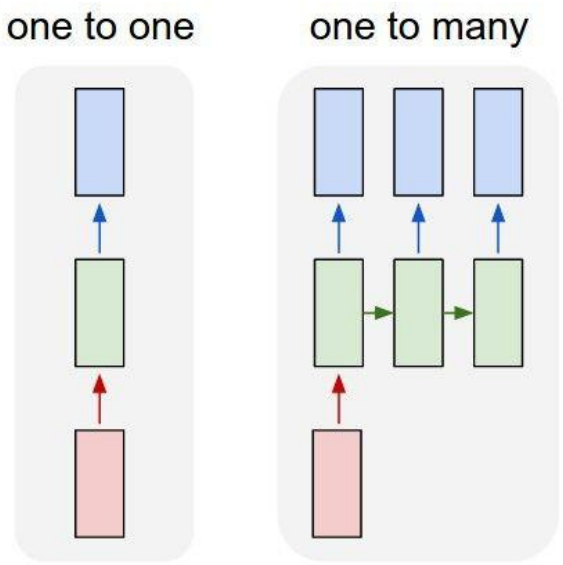

e.g. **Image Captioning**
image -> sequence of words

RNN: Process Sequences

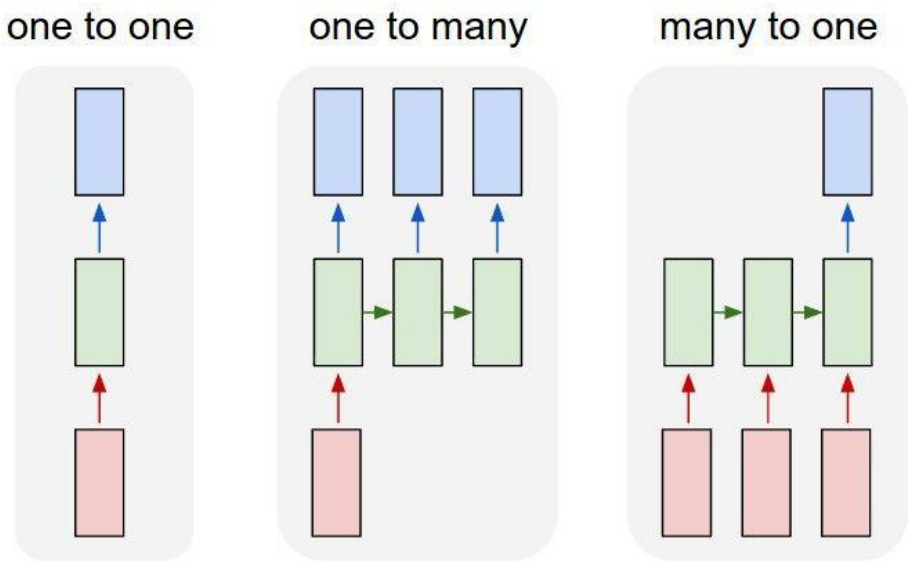

e.g. **action prediction**
sequence of video frames -> action class

RNN: Process Sequences

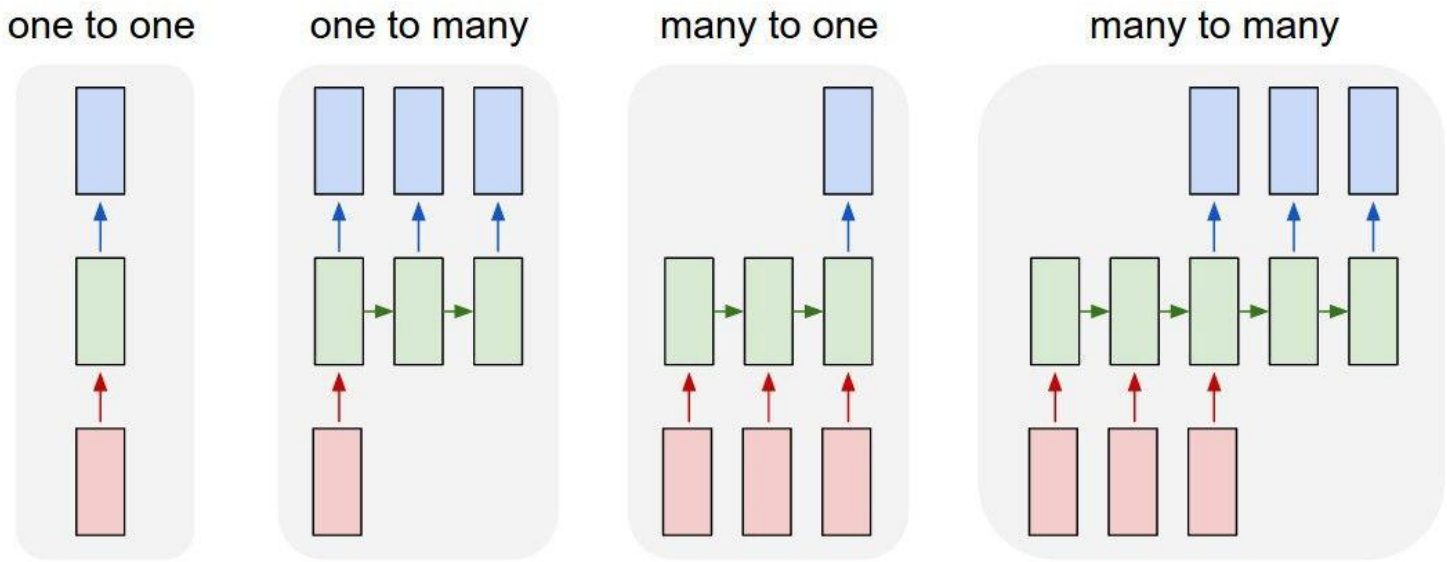

E.g. **Video Captioning**
Sequence of video frames -> caption

RNN: Process Sequences

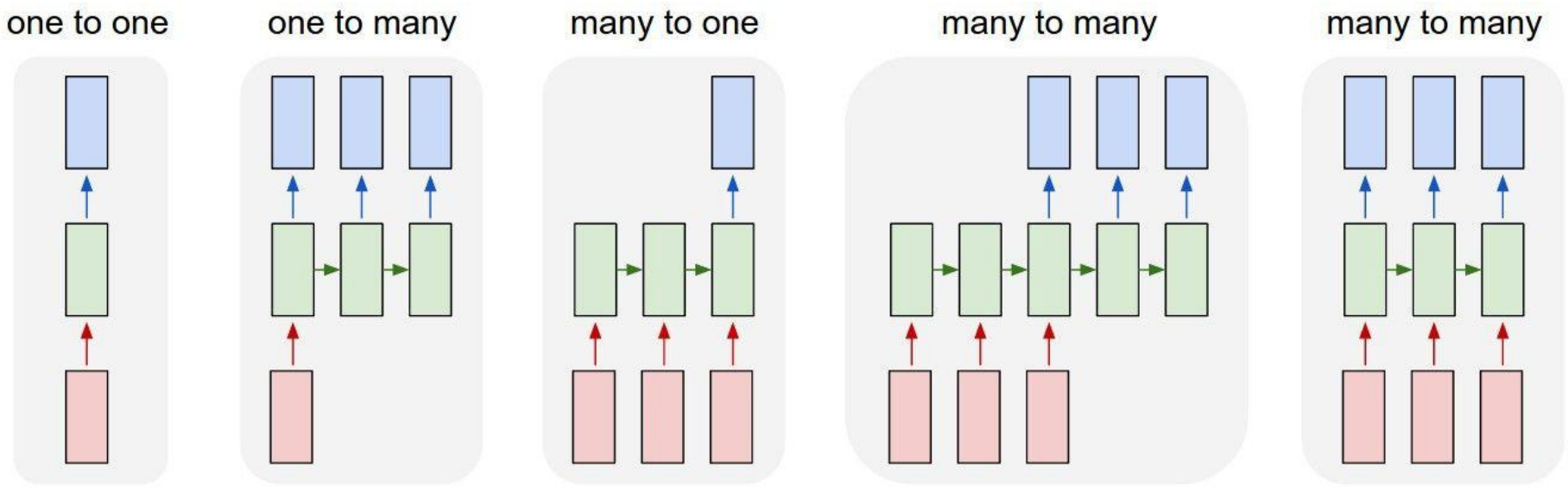

e.g. **Video classification on frame level**

Why we need RNN?

Reviews

Delightful place to have dinner

Food was good but service wasn't

Not worth for money charged

Really loved the ambience. Will surely visit again.

Loved all their foods especially the pasta

One hot coder

Sentence 1: 'Delightful place to have dinner'

Token: 5

Sentence 2: 'Food was nice but service wasn't'

Token: 6

How can we solve this variable length input?

- If we use Fully connected layers:
- Convert each sentence to be length equal to that of the sentence with maximum length by adding zeros.
- Another problem occurs.
- Our number of parameters becomes astronomically high.

Why we need RNN?

- Assume maximum length of the sentence is 20
- number of words in corpus= 20k
- each input will become 400k dimensional
- 10 neurons in the hidden layer, our number of parameters becomes 4 million!
- To build a proper network means having billions of parameters.
- **Solution:** a network with weight sharing capabilities
  - **same weights** are used in all the time steps hence the number of parameters is independent of input length and each of the weights gets updated during backpropagation through time.

Sequential Processing of Non-Sequence Data

Classify images by taking a series of “glimpses”

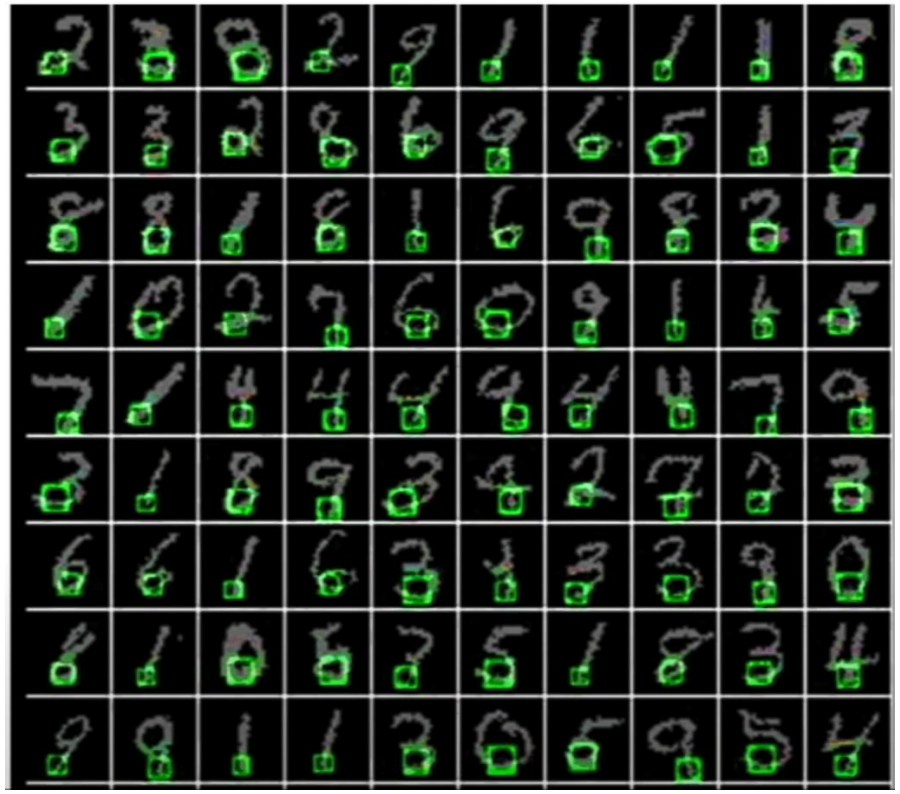

Ba, Mnih, and Kavukcuoglu, “Multiple Object Recognition with Visual Attention”, ICLR 2015.
Gregor et al, “DRAW: A Recurrent Neural Network For Image Generation”, ICML 2015
Figure copyright Karol Gregor, Ivo Danihelka, Alex Graves, Danilo Jimenez Rezende, and Daan Wierstra, 2015. Reproduced with permission.

Sequential Processing of Non-Sequence Data

Generate images one piece at a time!

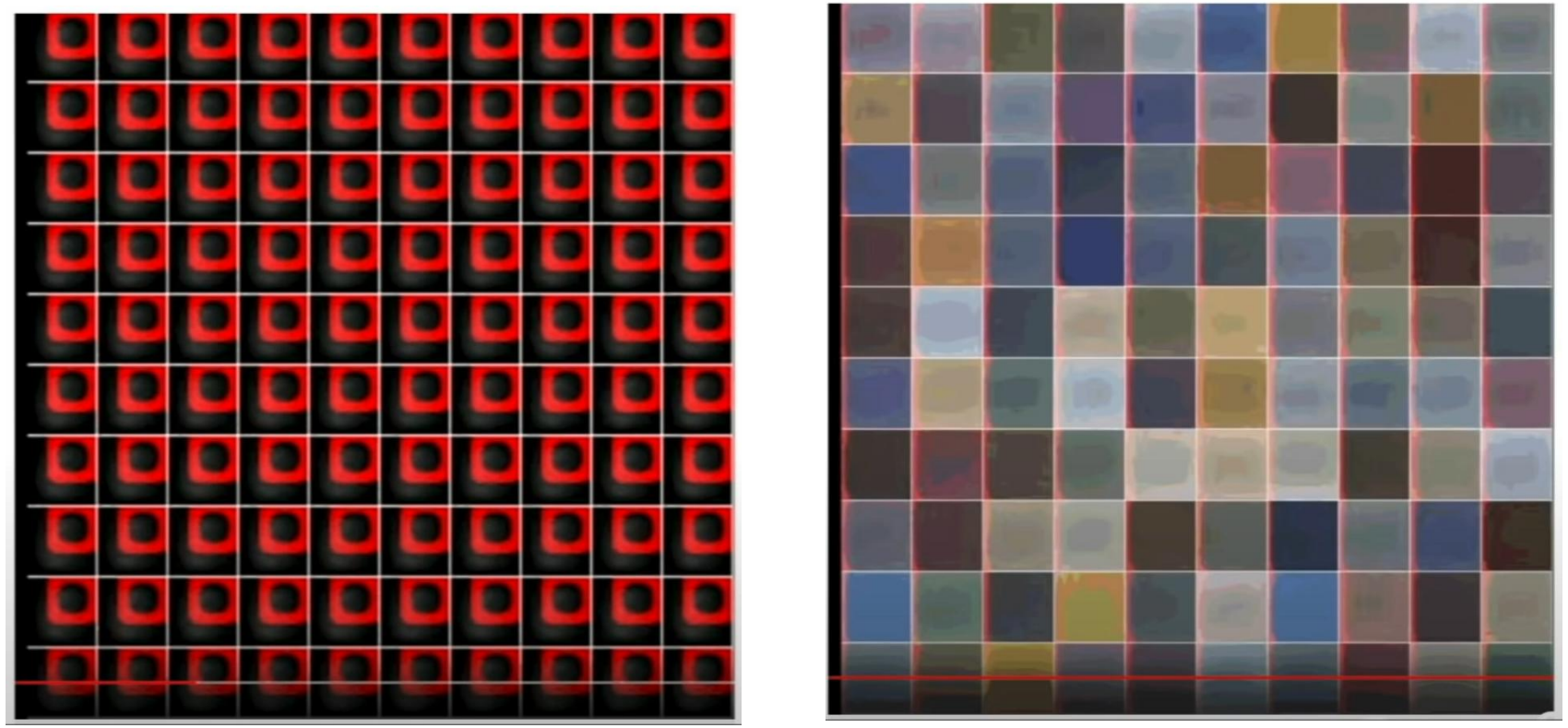

Gregor et al, “DRAW: A Recurrent Neural Network For Image Generation”, ICML 2015
Figure copyright Karol Gregor, Ivo Danihelka, Alex Graves, Danilo Jimenez Rezende, and Daan Wierstra, 2015. Reproduced with permission.

Architecture

Recurrent Neural Network

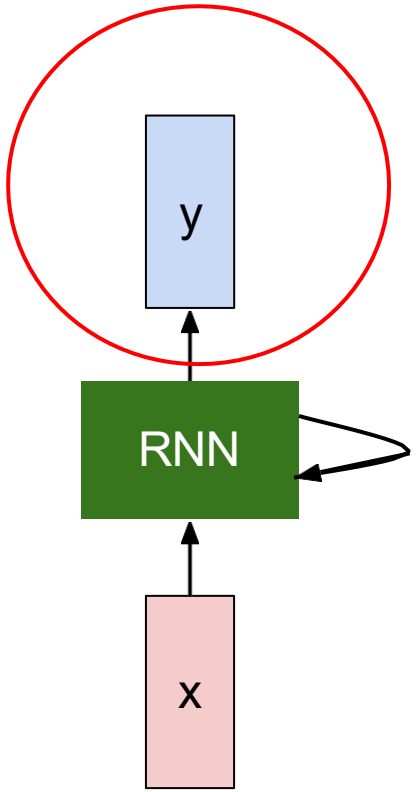

usually want to predict a vector at some time steps

Recurrent Neural Network

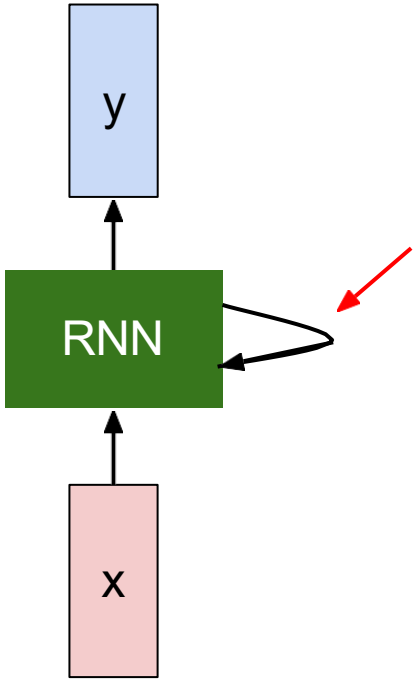

Key idea: RNNs have an “internal state” that is updated as a sequence is processed

Unrolled RNN

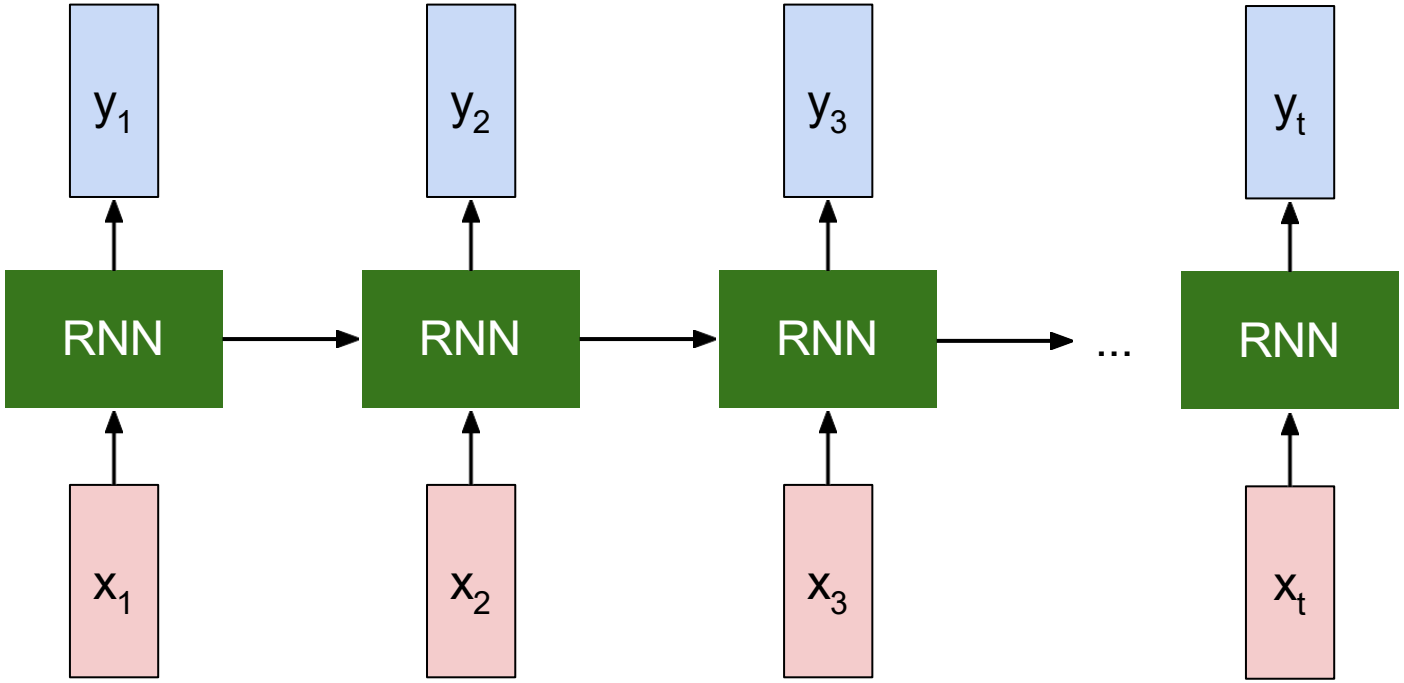

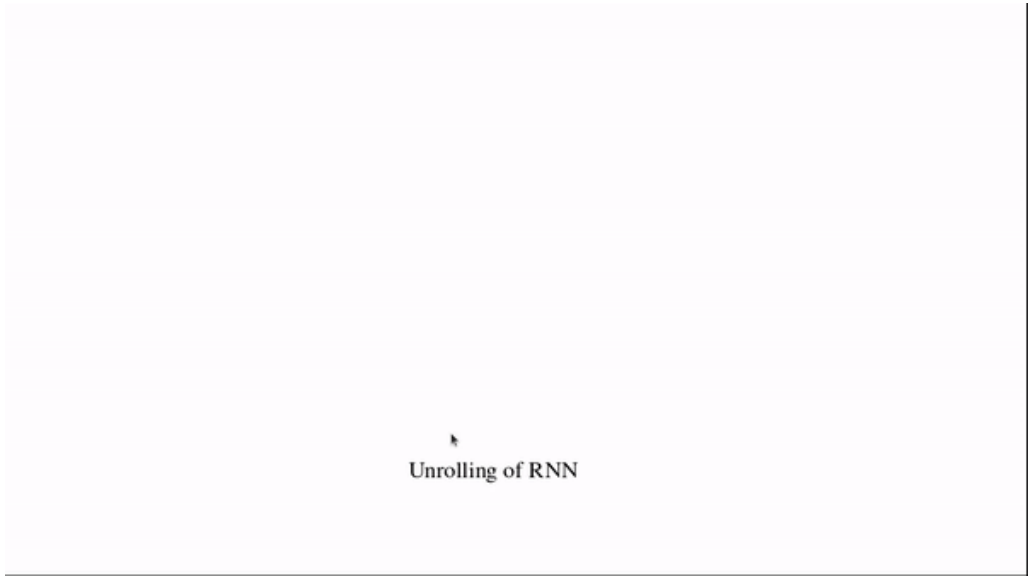

- RNN being unrolled over time.
- Unrolling means we are using the same RNN block at each point of time and the output of the previous time step becomes the input for the current time step.

How it works - example

- In RNN given a sentence, we first tokenize and one hot encode each word of a sentence. Then we input each token to RNN over time.

Visualize an RNN block for a single time step

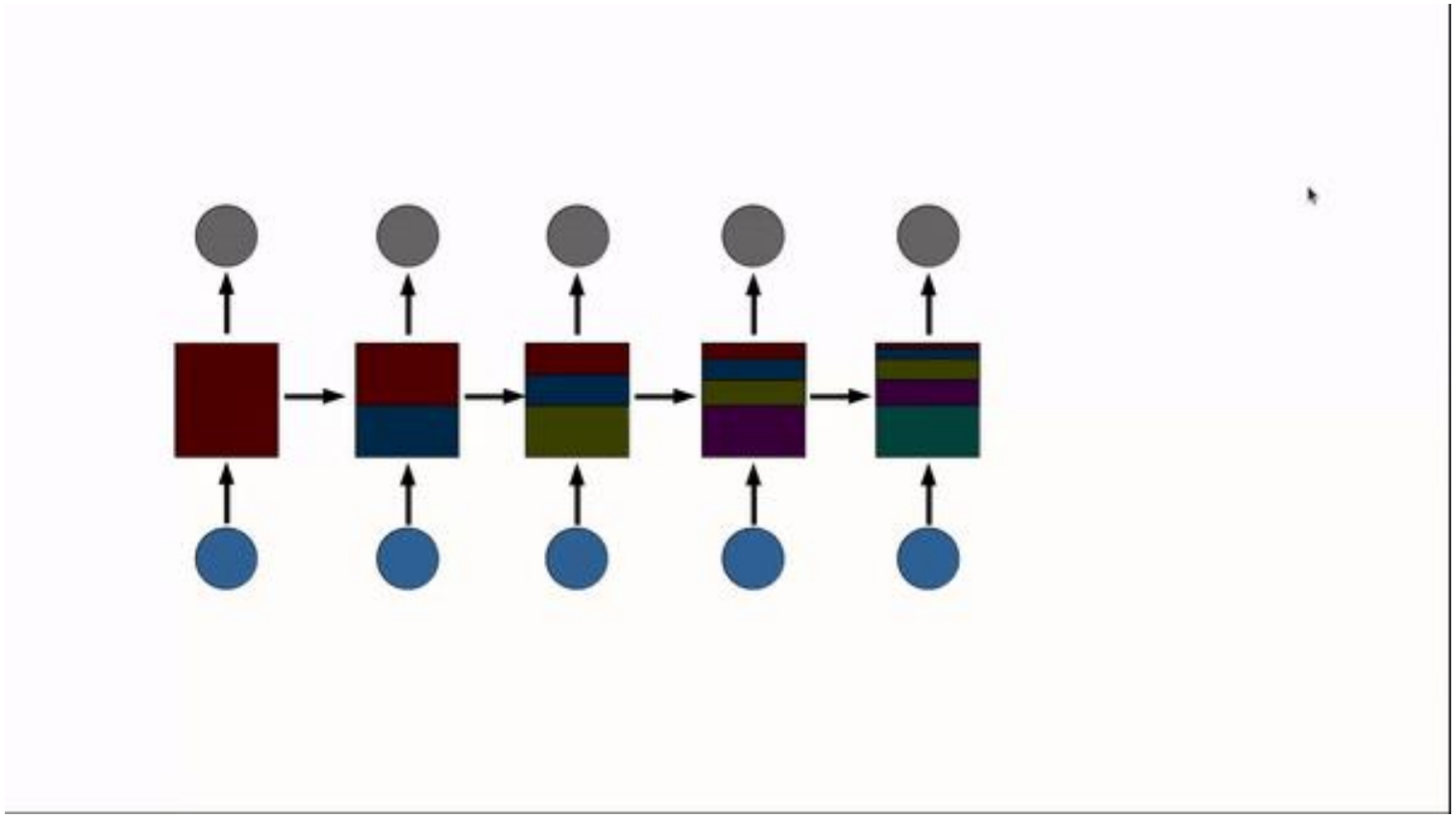

RNN hidden state update

- We can process a sequence of vectors **x** by applying a **recurrence formula** at every time step:

$$\boxed{h_t} = \boxed{f_W}(\boxed{h_{t-1}}, \boxed{x_t})$$

new state

old state

input vector at some time step

some function with parameters W

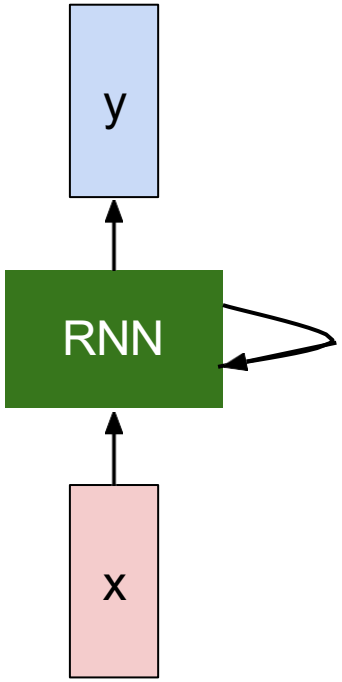

- Notice: the same function and the same set of parameters are used at every time step.

RNN output generation

- We can process a sequence of vectors **x** by applying a **recurrence formula** at every time step:

$$\boxed{y_t} = \boxed{f_{W_{hy}}}(\boxed{h_t})$$

output

new state

another function
with parameters W_o

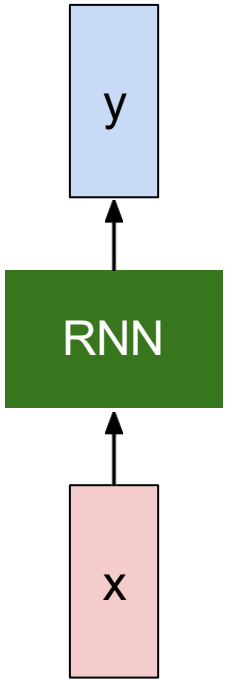

(Vanilla) Recurrent Neural Network

- The state consists of a single *"hidden"* vector **h**:

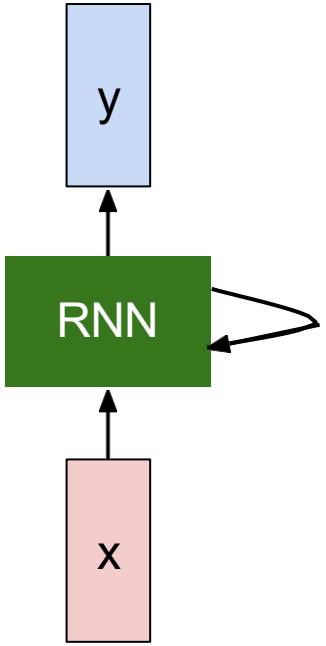

$$h_t = f_W(h_{t-1}, x_t)$$

$$h_t = \tanh(W_{hh}h_{t-1} + W_{xh}x_t)$$

$$y_t = W_{hy}h_t$$

Sometimes called a "Vanilla RNN" or an "Elman RNN" after Prof. Jeffrey Elman

Computational graph

RNN: Computational Graph

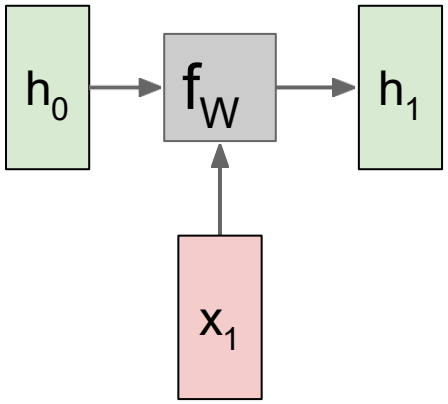

RNN: Computational Graph

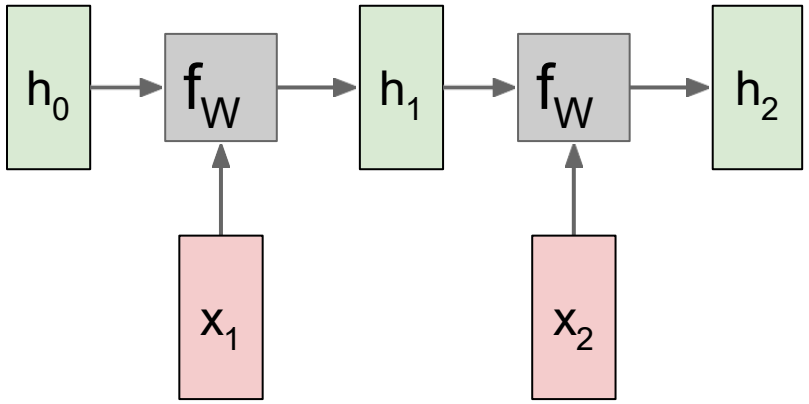

RNN: Computational Graph

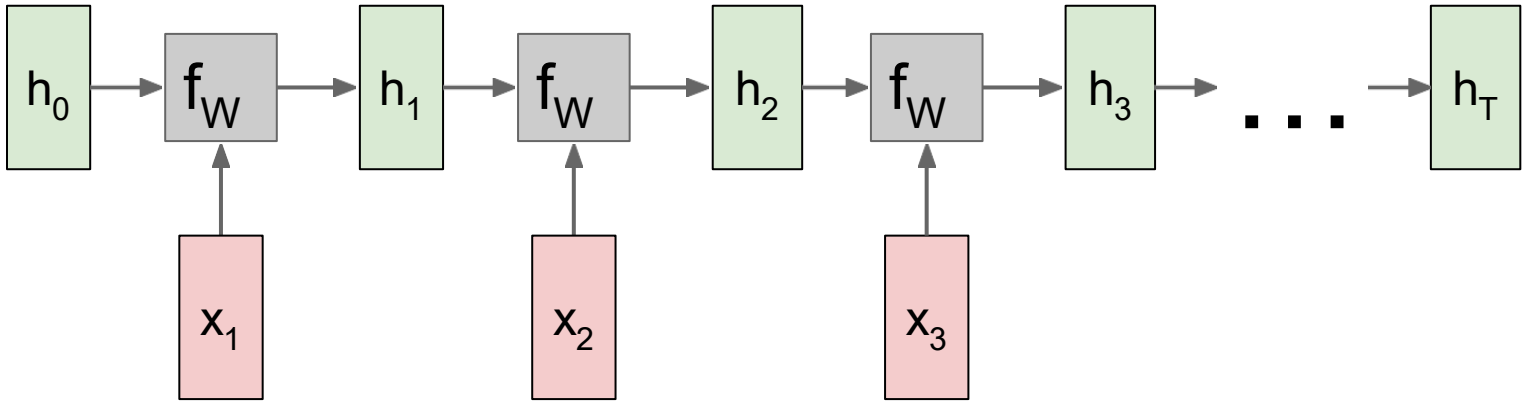

RNN: Computational Graph

Re-use the same weight matrix at every time-step

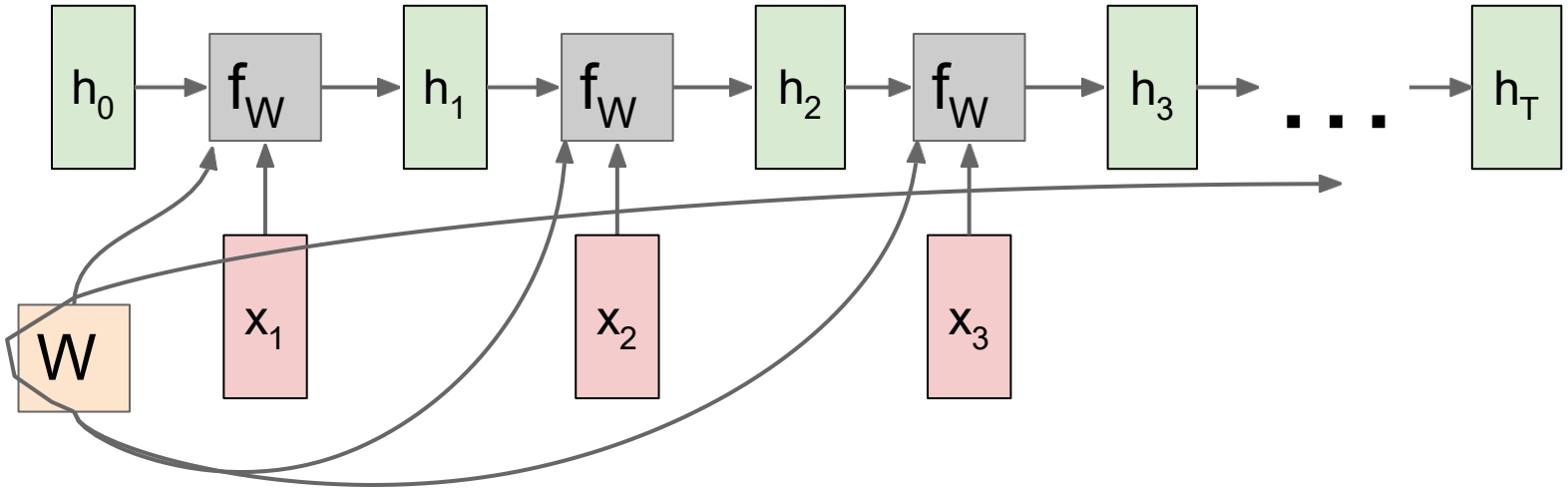

RNN: Computational Graph: Many to Many

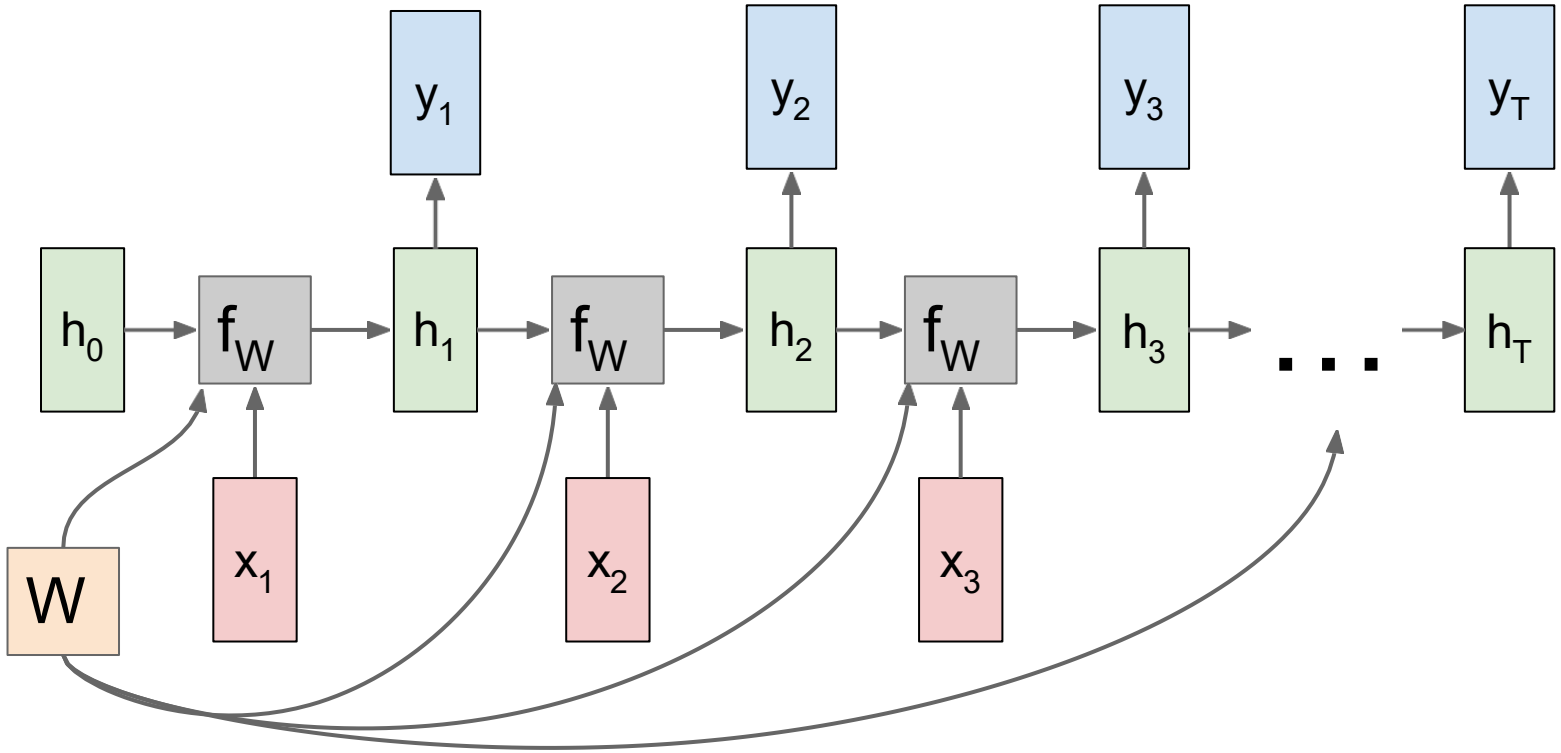

RNN: Computational Graph: Many to Many

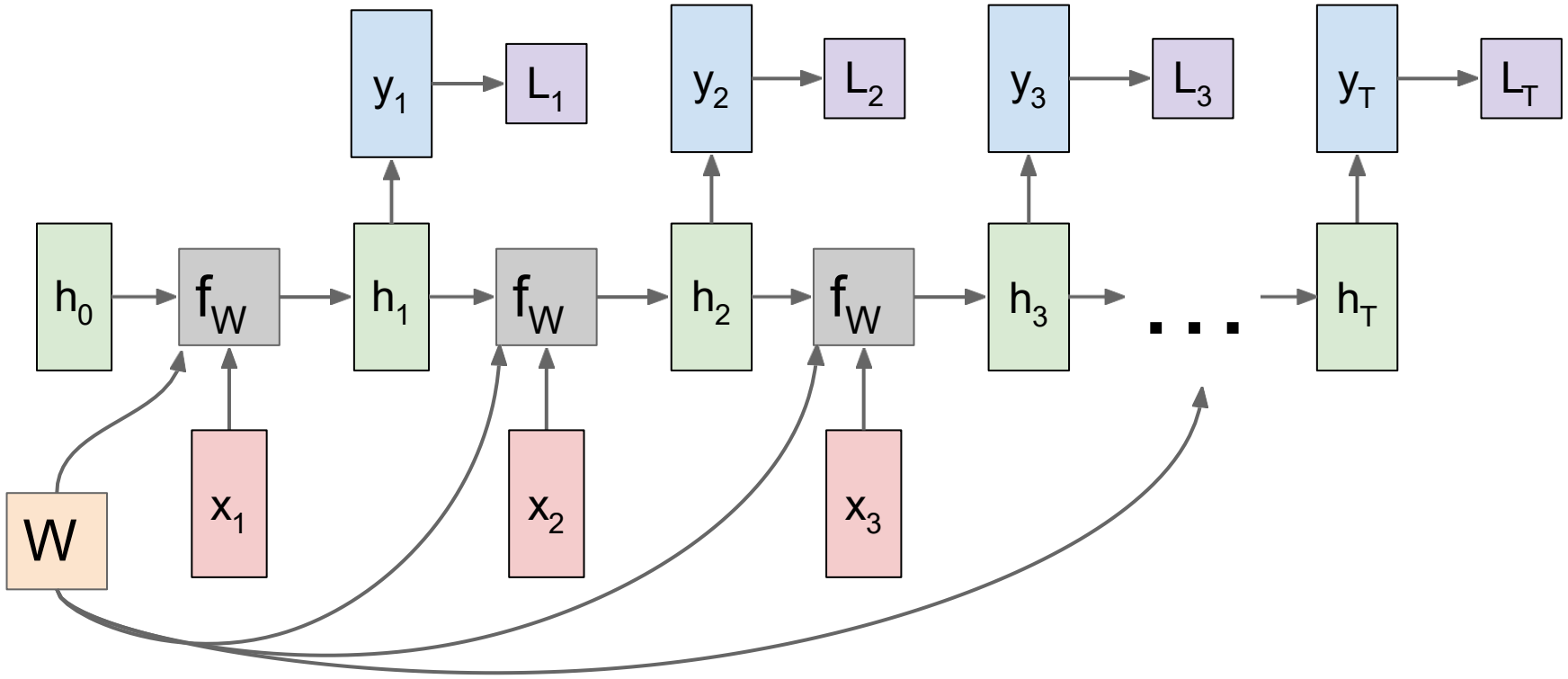

RNN: Computational Graph: Many to Many

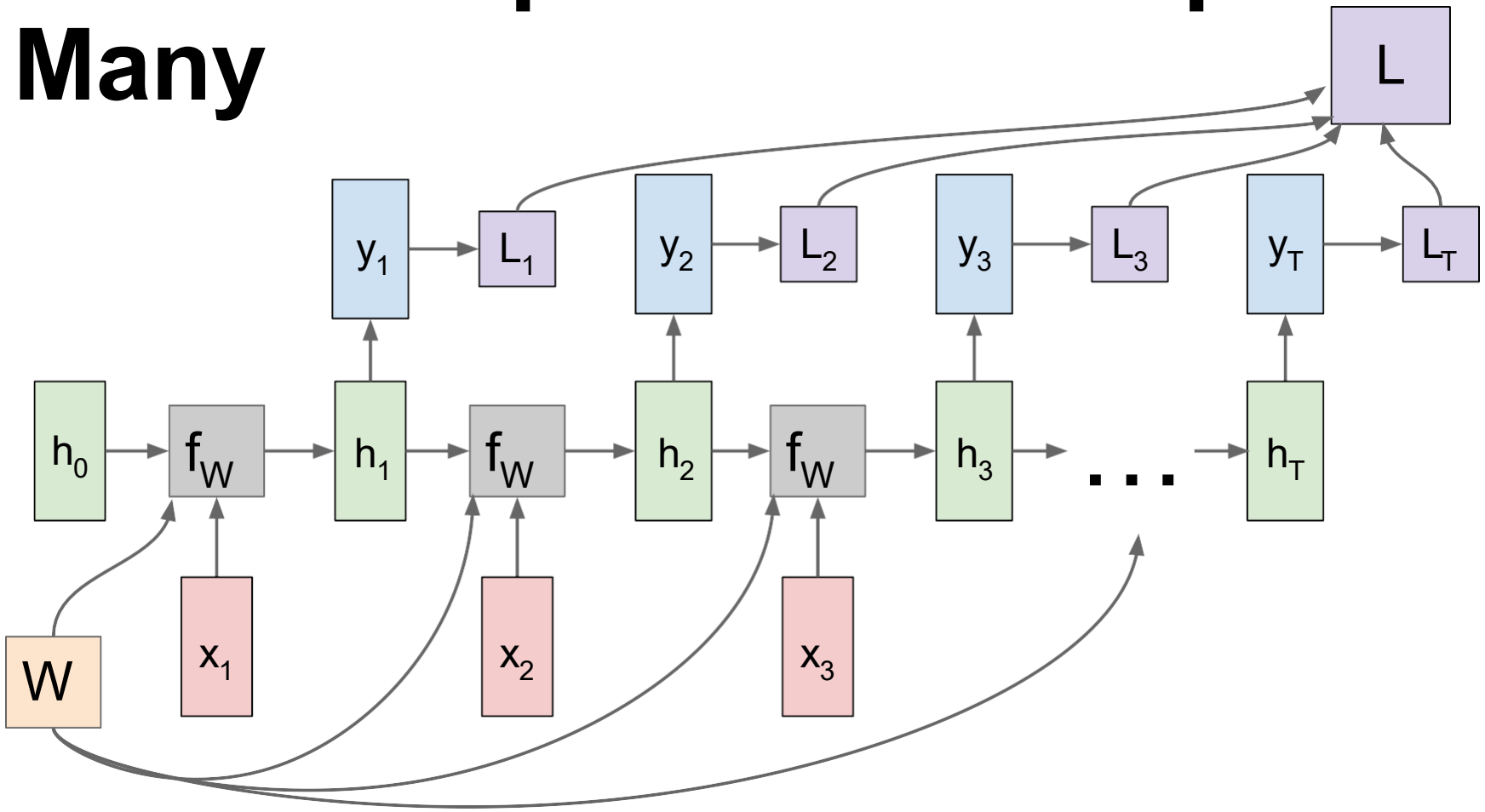

RNN: Computational Graph: Many to One

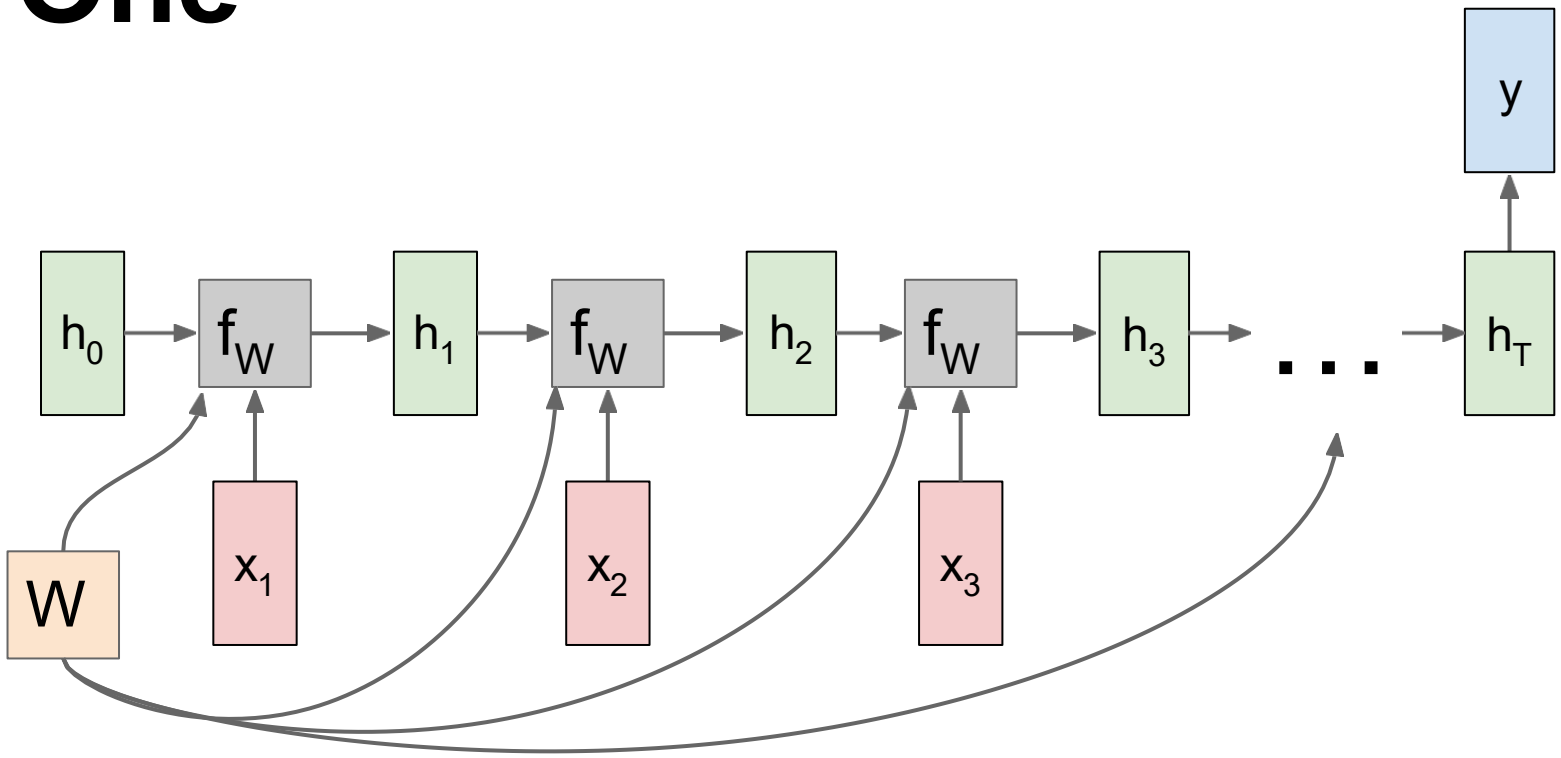

RNN: Computational Graph: Many to One

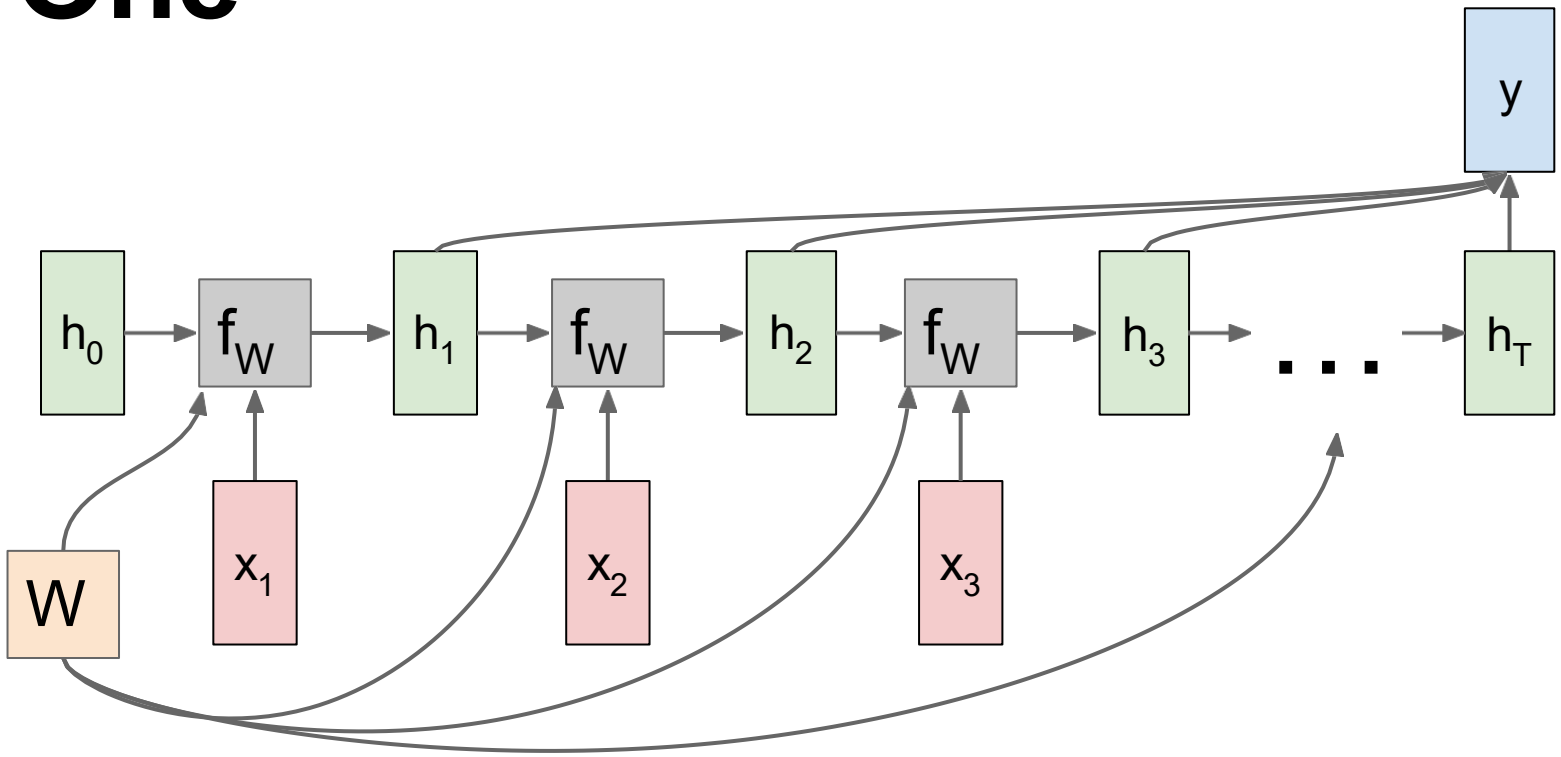

RNN: Computational Graph: One to Many

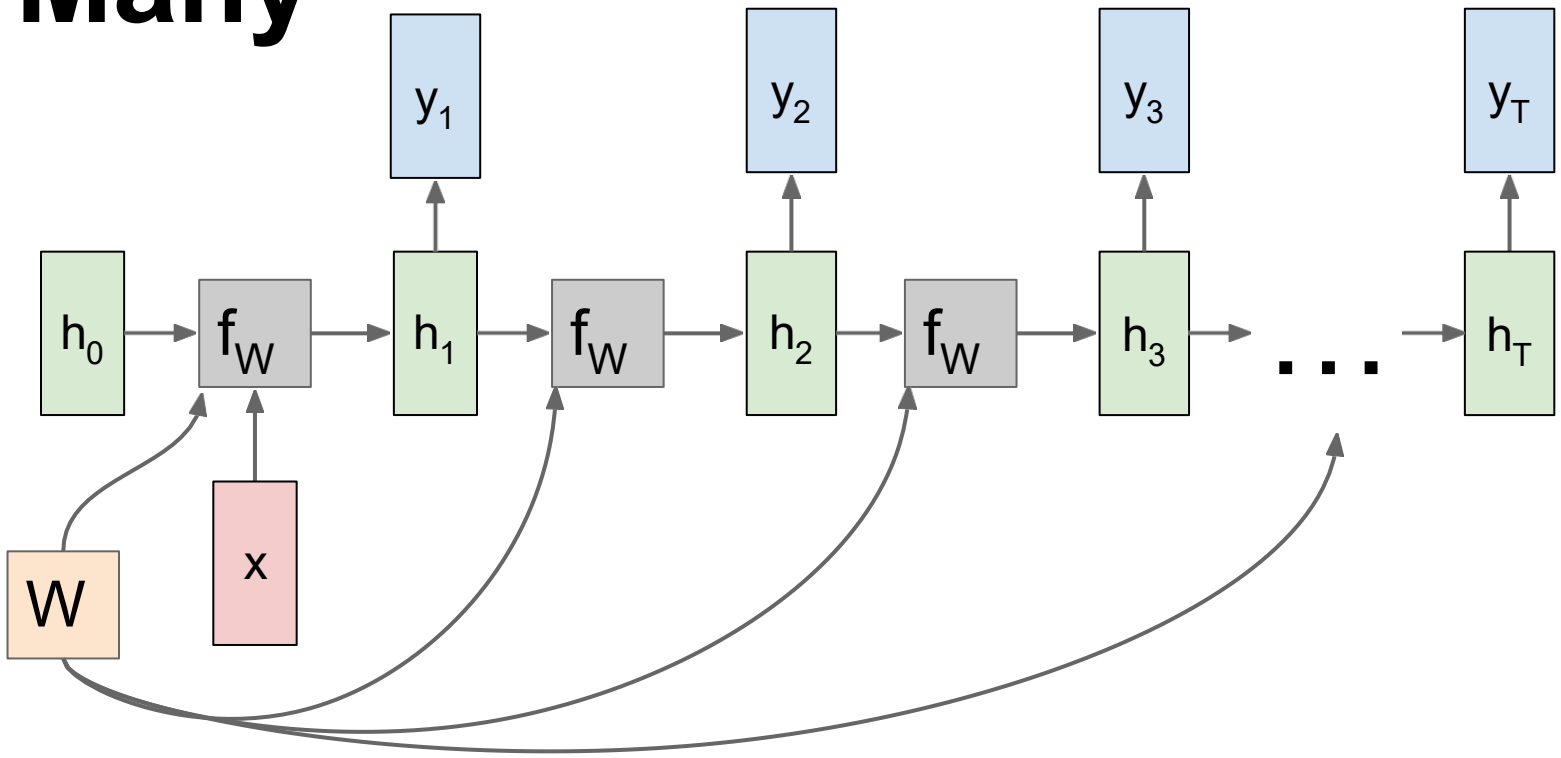

RNN: Computational Graph: One to Many

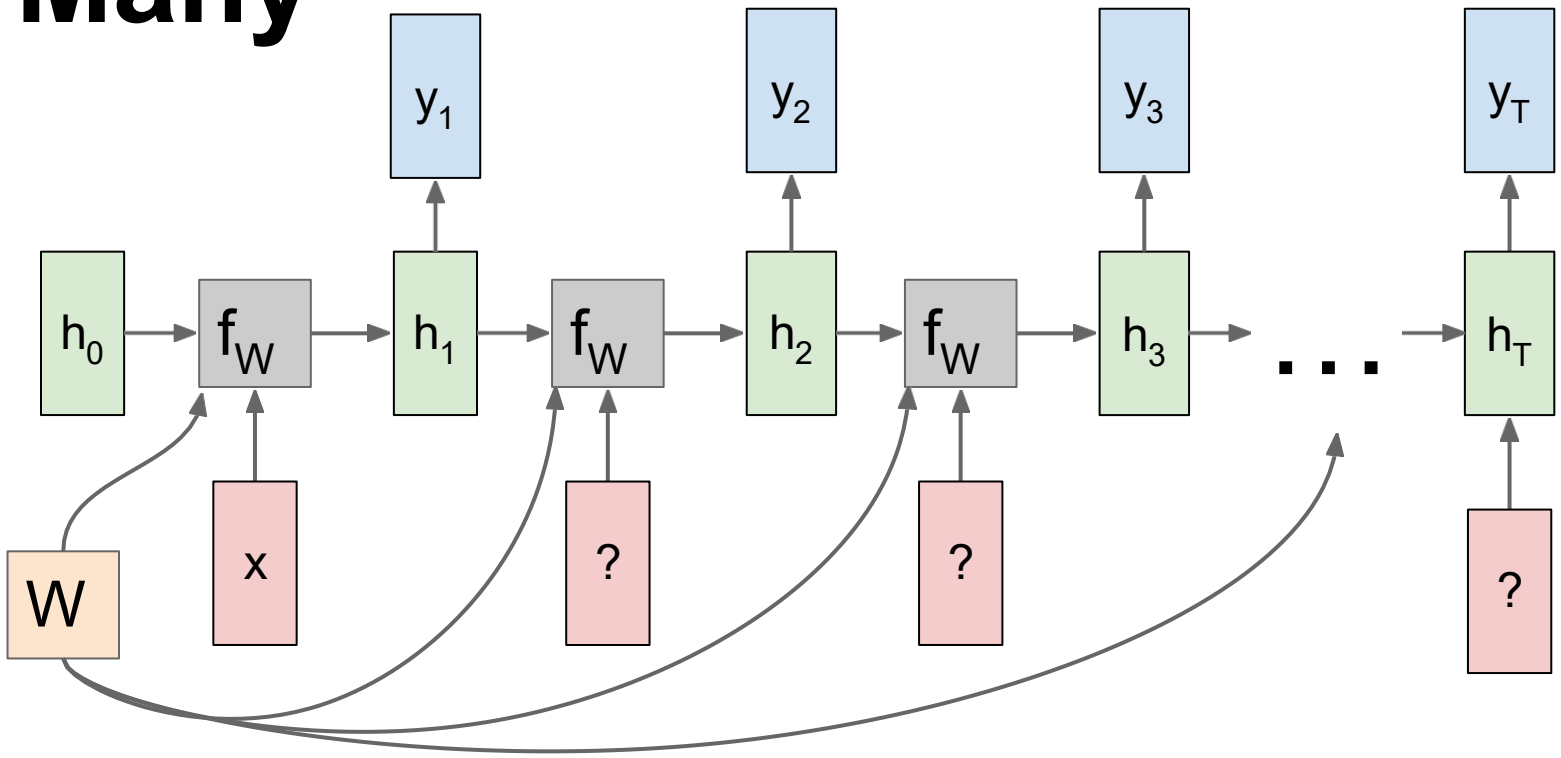

RNN: Computational Graph: One to Many

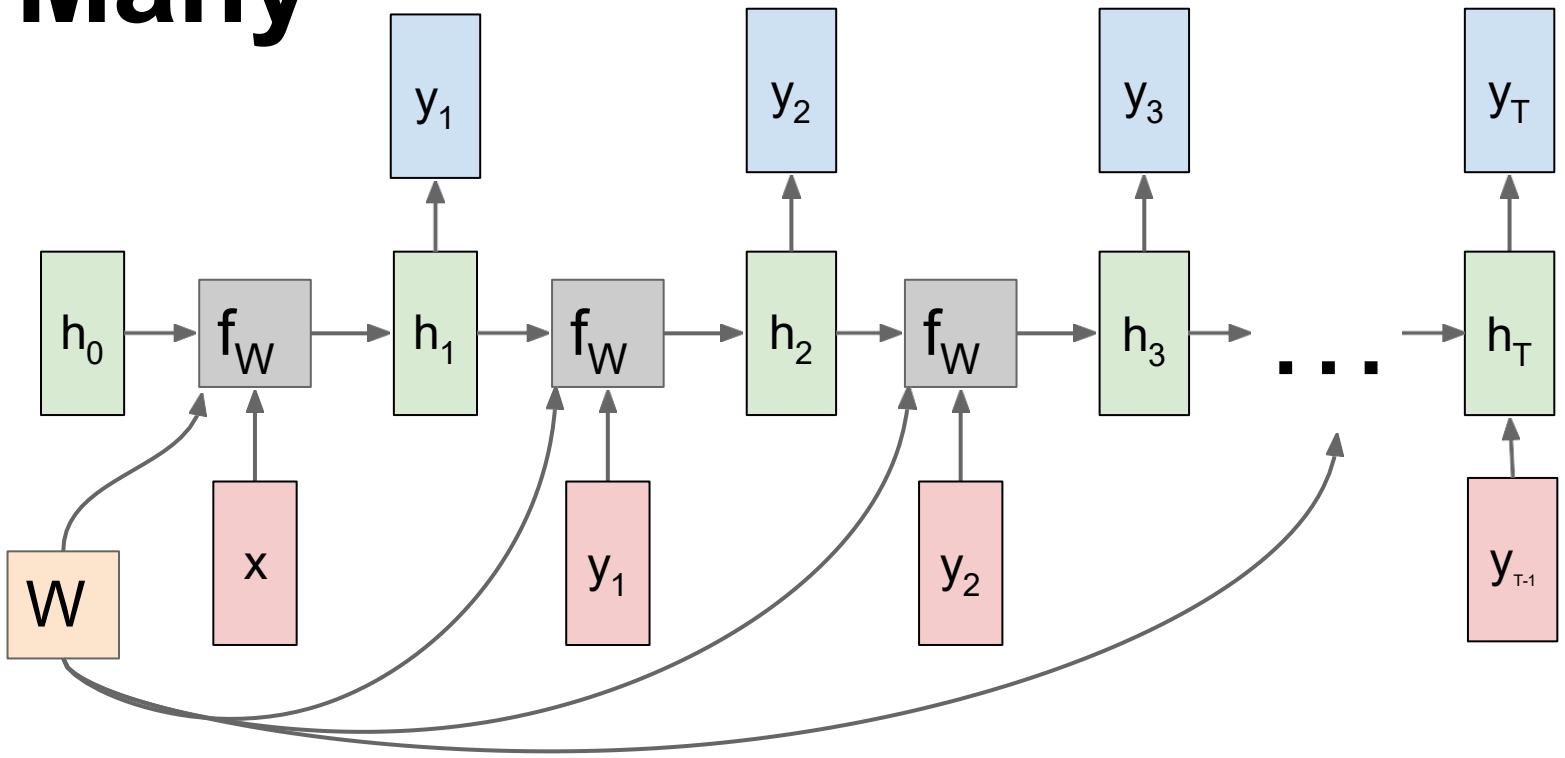

Sequence to Sequence: Many-to-one + one-to-many

Many to one: Encode input sequence in a single vector

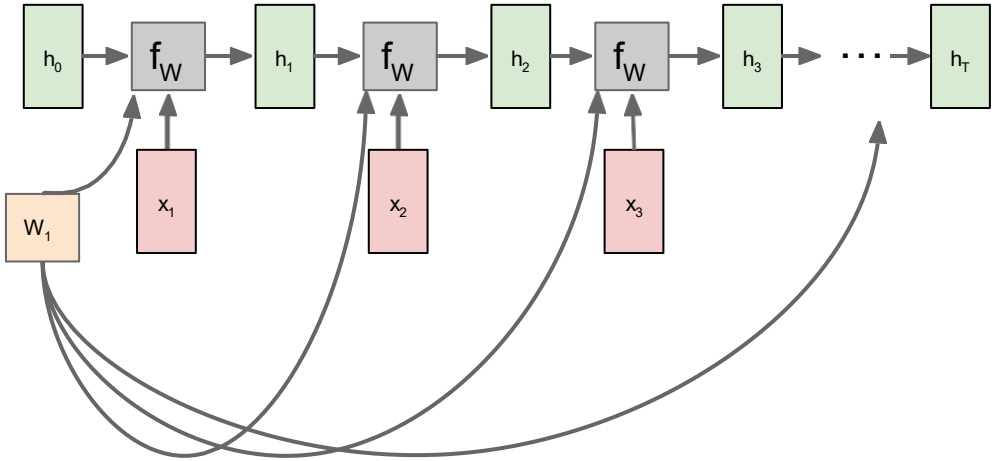

Sutskever et al, “Sequence to Sequence Learning with Neural Networks”, NIPS 2014

Sequence to Sequence: Many-to-one + one-to-many

One to many: Produce output sequence from single input vector

Many to one: Encode input sequence in a single vector

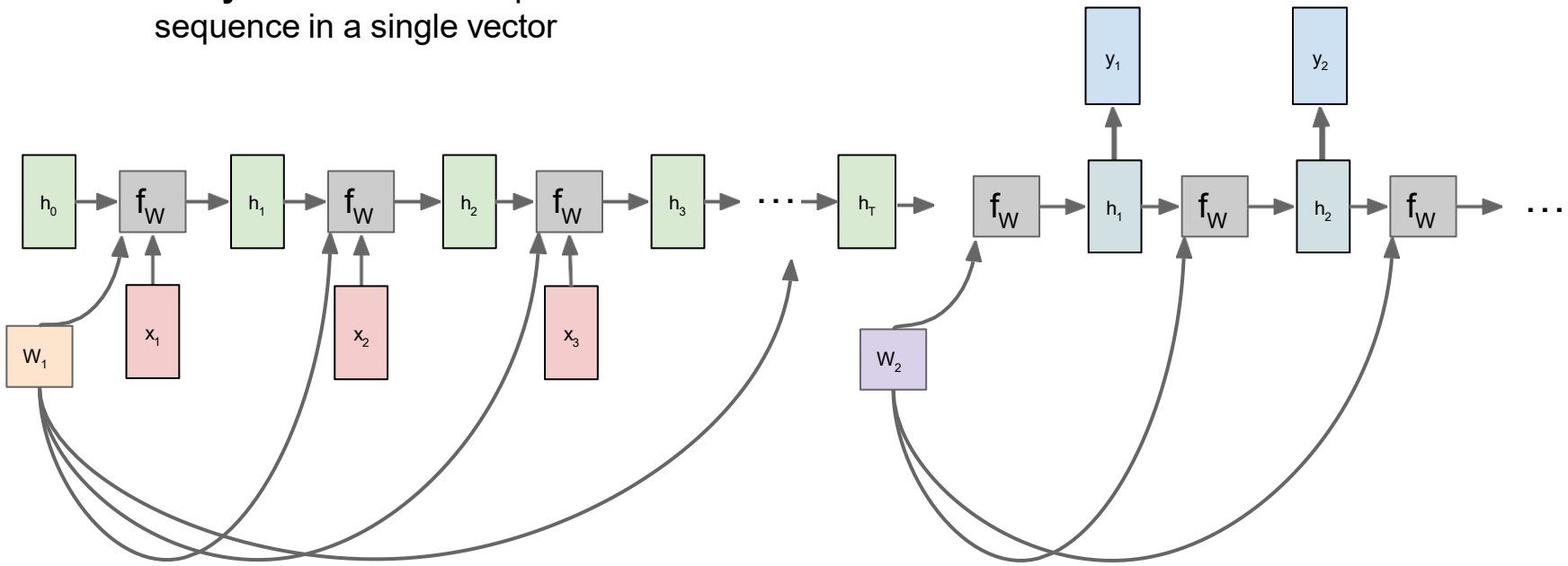

Sutskever et al, “Sequence to Sequence Learning with Neural Networks”, NIPS 2014

Multilayer RNNs

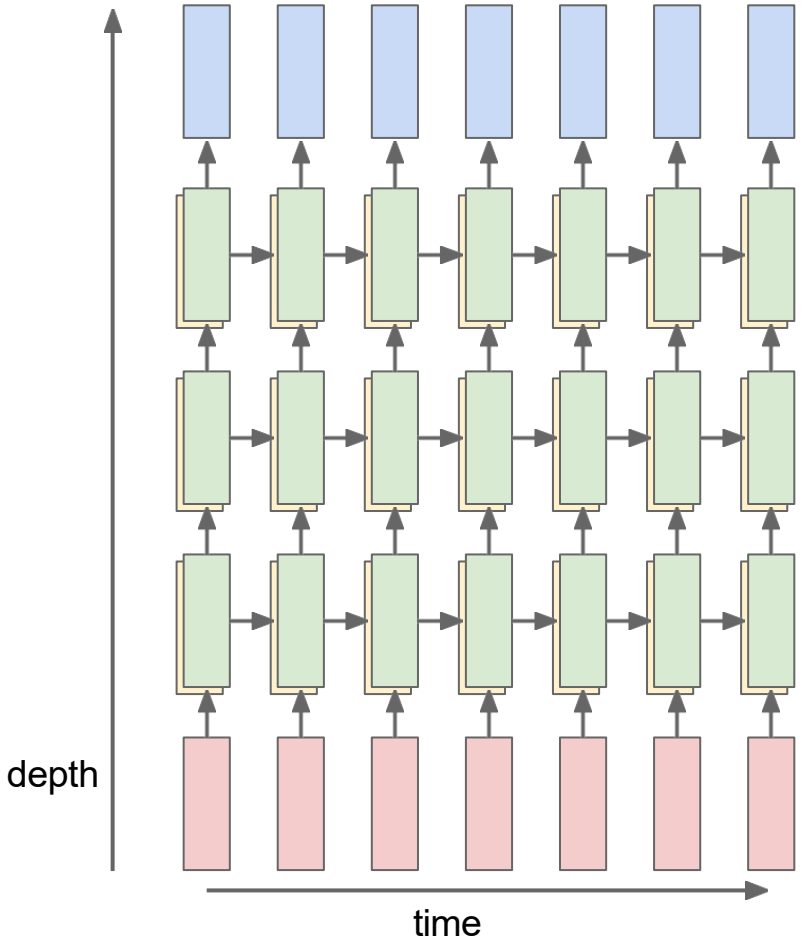

min-char-rnn.py gist: 112 lines of Python

```python
"""
Minimal character-level Vanilla RNN model. Written by Andrej Karpathy (@karpathy)
BSD License
"""
import numpy as np

# data I/O
data = open('input.txt', 'r').read() # should be simple plain text file
chars = list(set(data))
data_size, vocab_size = len(data), len(chars)
print 'data has %d characters, %d unique.' % (data_size, vocab_size)
char_to_ix = { ch:i for i,ch in enumerate(chars) }
ix_to_char = { i:ch for i,ch in enumerate(chars) }

# hyperparameters
hidden_size = 100 # size of hidden layer of neurons
seq_length = 25 # number of steps to unroll the RNN for
learning_rate = 1e-1

# model parameters
Wxh = np.random.randn(hidden_size, vocab_size)*0.01 # input to hidden
Whh = np.random.randn(hidden_size, hidden_size)*0.01 # hidden to hidden
Why = np.random.randn(vocab_size, hidden_size)*0.01 # hidden to output
bh = np.zeros((hidden_size, 1)) # hidden bias
by = np.zeros((vocab_size, 1)) # output bias

def lossFun(inputs, targets, hprev):
  """
  inputs,targets are both list of integers.
  hprev is Hx1 array of initial hidden state
  returns the loss, gradients on model parameters, and last hidden state
  """
  xs, hs, ys, ps = {}, {}, {}, {}
  hs[-1] = np.copy(hprev)
  loss = 0
  # forward pass
  for t in xrange(len(inputs)):
    xs[t] = np.zeros((vocab_size,1)) # encode in 1-of-k representation
    xs[t][inputs[t]] = 1
    hs[t] = np.tanh(np.dot(Wxh, xs[t]) + np.dot(Whh, hs[t-1]) + bh) # hidden state
    ys[t] = np.dot(Why, hs[t]) + by # unnormalized log probabilities for next chars
    ps[t] = np.exp(ys[t]) / np.sum(np.exp(ys[t])) # probabilities for next chars
    loss += -np.log(ps[t][targets[t],0]) # softmax (cross-entropy loss)
  # backward pass: compute gradients going backwards
  dwxh, dwhh, dwhy = np.zeros_like(Wxh), np.zeros_like(Whh), np.zeros_like(Why)
  dbh, dby = np.zeros_like(bh), np.zeros_like(by)
  dhnext = np.zeros_like(hs[0])
  for t in reversed(xrange(len(inputs))):
    dy = np.copy(ps[t])
    dy[targets[t]] -= 1 # backprop into y
    dwhy += np.dot(dy, hs[t].T)
    dby += dy
    dh = np.dot(Why.T, dy) + dhnext # backprop into h
    dhraw = (1 - hs[t] * hs[t]) * dh # backprop through tanh nonlinearity
    dbh += dhraw
    dwxh += np.dot(dhraw, xs[t].T)
    dwhh += np.dot(dhraw, hs[t-1].T)
    dhnext = np.dot(Whh.T, dhraw)
  for dparam in [dwxh, dwhh, dwhy, dbh, dby]:
    np.clip(dparam, -5, 5, out=dparam) # clip to mitigate exploding gradients
  return loss, dwxh, dwhh, dwhy, dbh, dby, hs[len(inputs)-1]

def sample(h, seed_ix, n):
  """
  sample a sequence of integers from the model
  h is memory state, seed_ix is seed letter for first time step
  """
  x = np.zeros((vocab_size, 1))
  x[seed_ix] = 1
  ixes = []
  for t in xrange(n):
    h = np.tanh(np.dot(Wxh, x) + np.dot(Whh, h) + bh)
    y = np.dot(Why, h) + by
    p = np.exp(y) / np.sum(np.exp(y))
    ix = np.random.choice(range(vocab_size), p=p.ravel())
    x = np.zeros((vocab_size, 1))
    x[ix] = 1
    ixes.append(ix)
  return ixes

n, p = 0, 0
mWxh, mWhh, mWhy = np.zeros_like(Wxh), np.zeros_like(Whh), np.zeros_like(Why)
mbh, mby = np.zeros_like(bh), np.zeros_like(by) # memory variables for Adagrad
smooth_loss = -np.log(1.0/vocab_size)*seq_length # loss at iteration 0
while True:
  # prepare inputs (we're sweeping from left to right in steps seq_length long)
  if p+seq_length+1 >= len(data) or n == 0:
    hprev = np.zeros((hidden_size,1)) # reset RNN memory
    p = 0 # go from start of data
  inputs = [char_to_ix[ch] for ch in data[p:p+seq_length]]
  targets = [char_to_ix[ch] for ch in data[p+1:p+seq_length+1]]

  # sample from the model now and then
  if n % 100 == 0:
    sample_ix = sample(hprev, inputs[0], 200)
    txt = ''.join(ix_to_char[ix] for ix in sample_ix)
    print '----\n %s \n----' % (txt, )

  # forward seq_length characters through the net and fetch gradient
  loss, dwxh, dwhh, dwhy, dbh, dby, hprev = lossFun(inputs, targets, hprev)
  smooth_loss = smooth_loss * 0.999 + loss * 0.001
  if n % 100 == 0: print 'iter %d, loss: %f' % (n, smooth_loss) # print progress

  # perform parameter update with Adagrad
  for param, dparam, mem in zip([Wxh, Whh, Why, bh, by],
                                [dwxh, dwhh, dwhy, dbh, dby],
                                [mwxh, mwhh, mwhy, mbh, mby]):
    mem += dparam * dparam
    param += -learning_rate * dparam / np.sqrt(mem + 1e-8) # adagrad update

  p += seq_length # move data pointer
  n += 1 # iteration counter
```

Back Propagation Through Time

Backpropagation through time

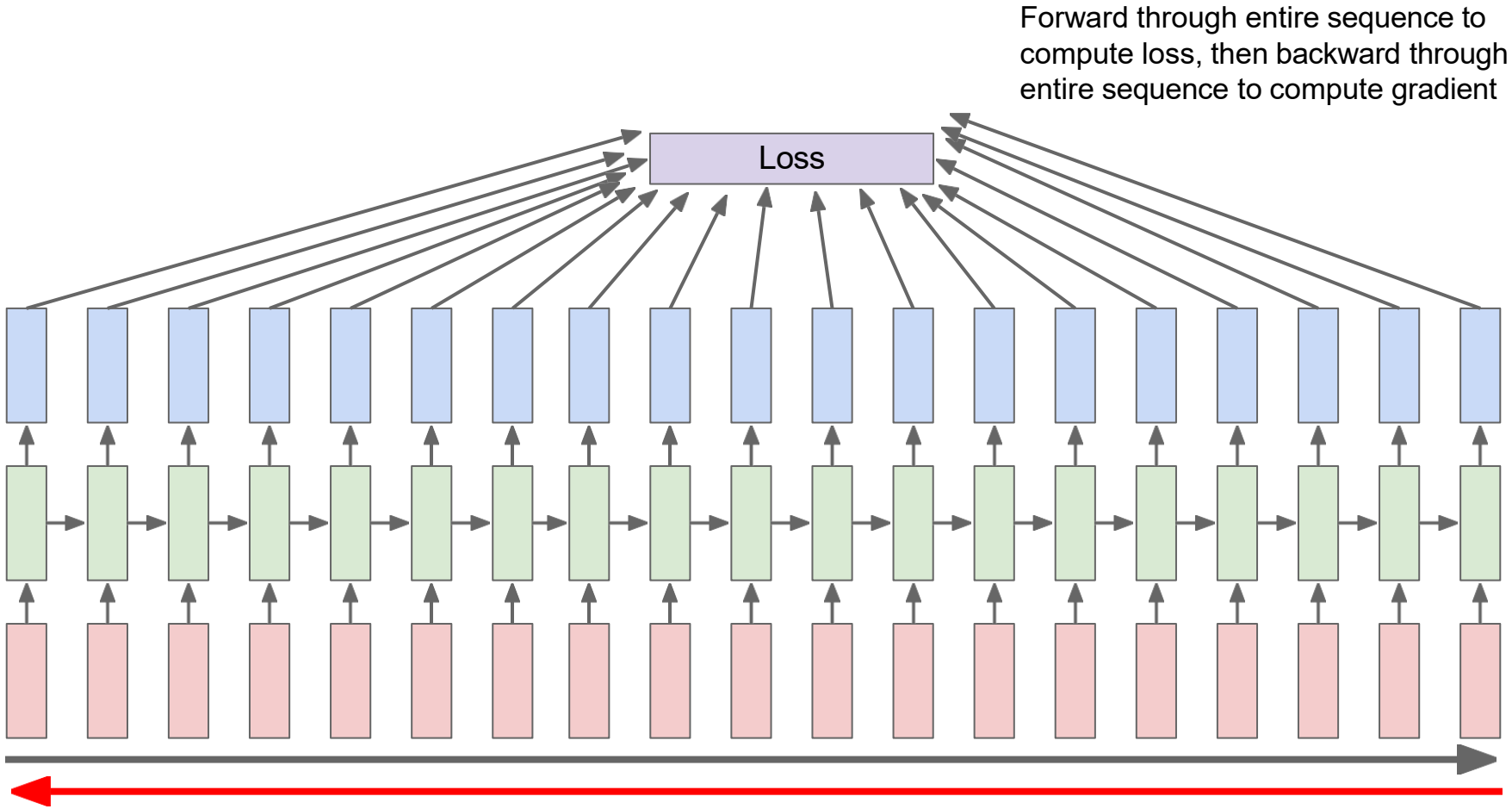

Truncated Backpropagation through time

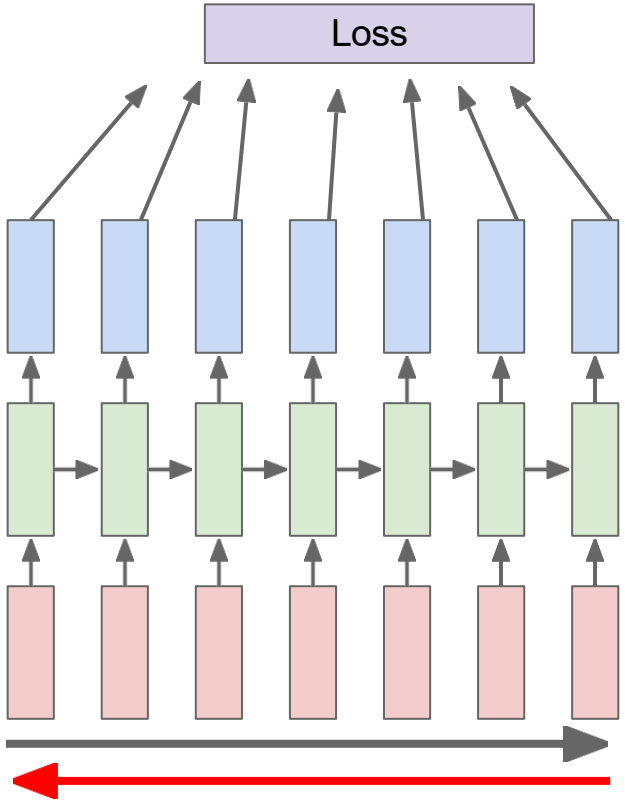

Run forward and backward through chunks of the sequence instead of whole sequence

Truncated Backpropagation through time

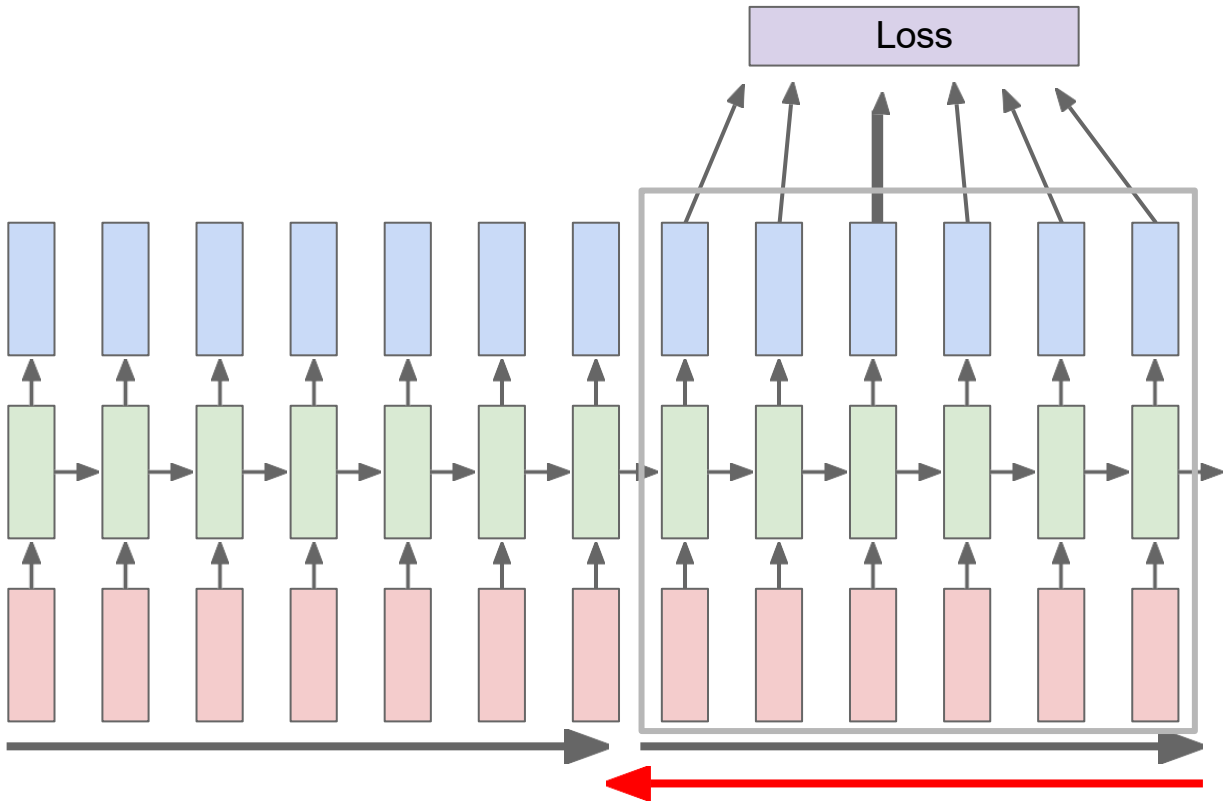

Carry hidden states forward in time forever, but only backpropagate for some smaller number of steps

Truncated Backpropagation through time

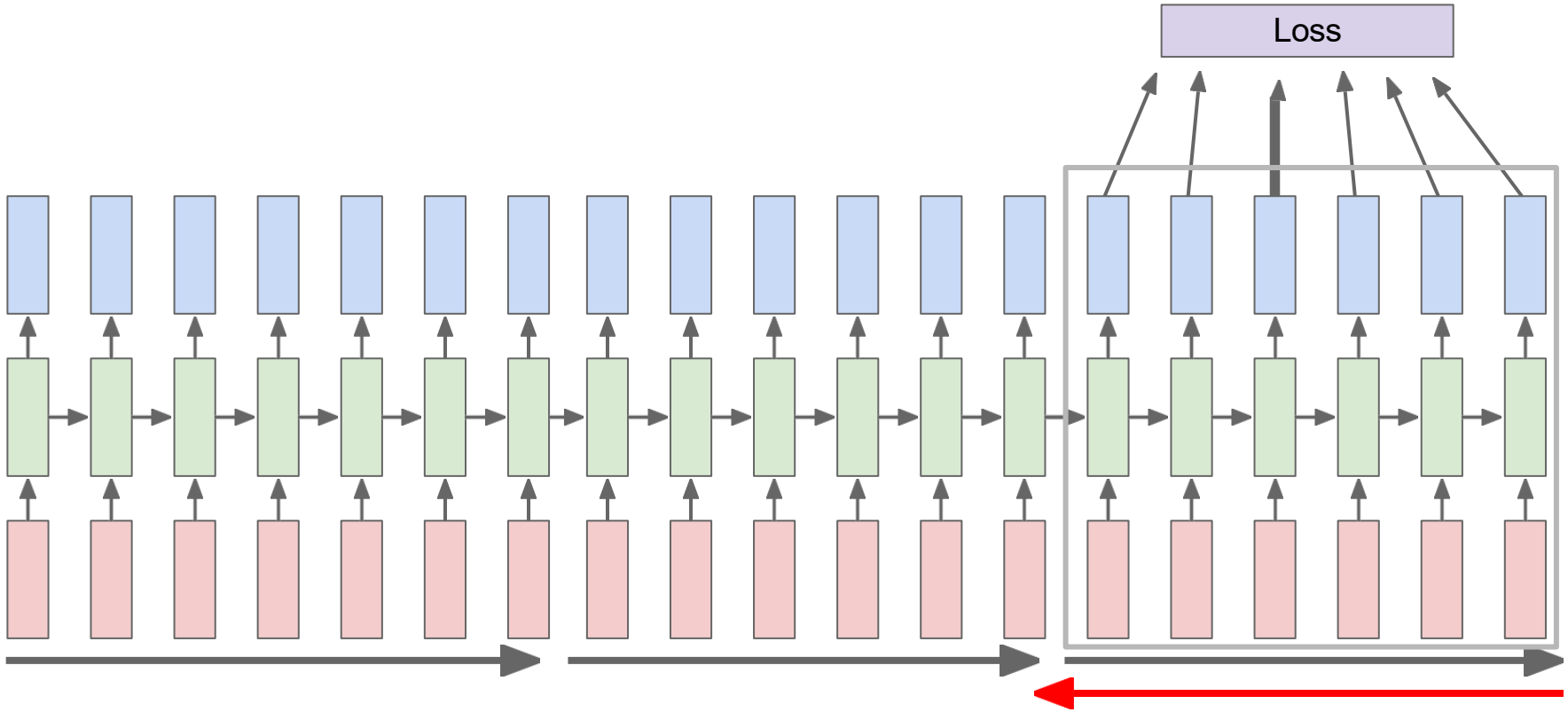

Examples

Character-level Language Model

- Vocabulary: [h,e,l,o]
- Example training sequence:

“hello”

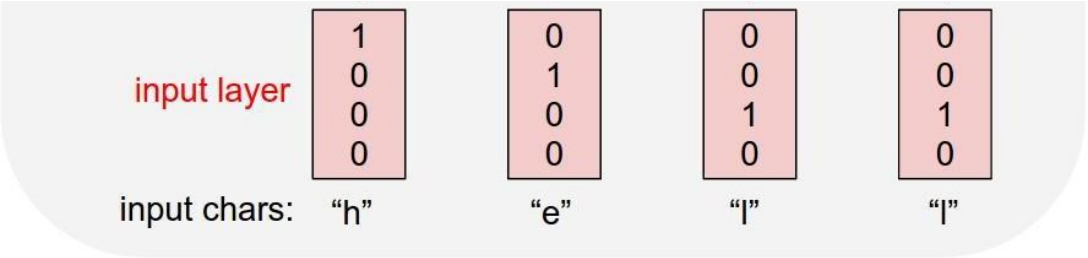

Character-level Language Model

- Vocabulary: [h,e,l,o]
- Example training sequence:

“hello”

$$h_t = \tanh(W_{hh} h_{t-1} + W_{xh} x_t)$$

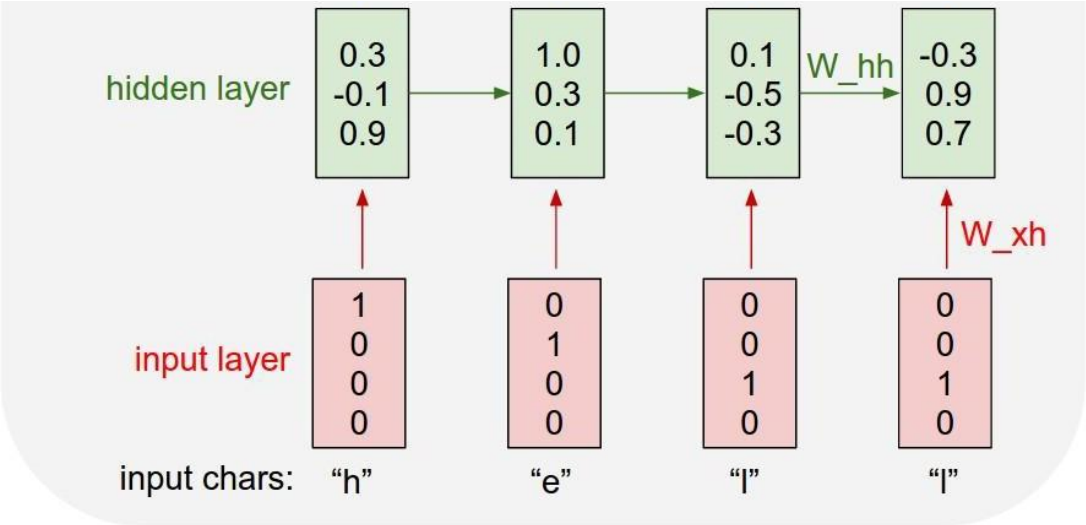

Character-level Language Model

- Vocabulary: [h,e,l,o]
- Example training sequence:

“hello”

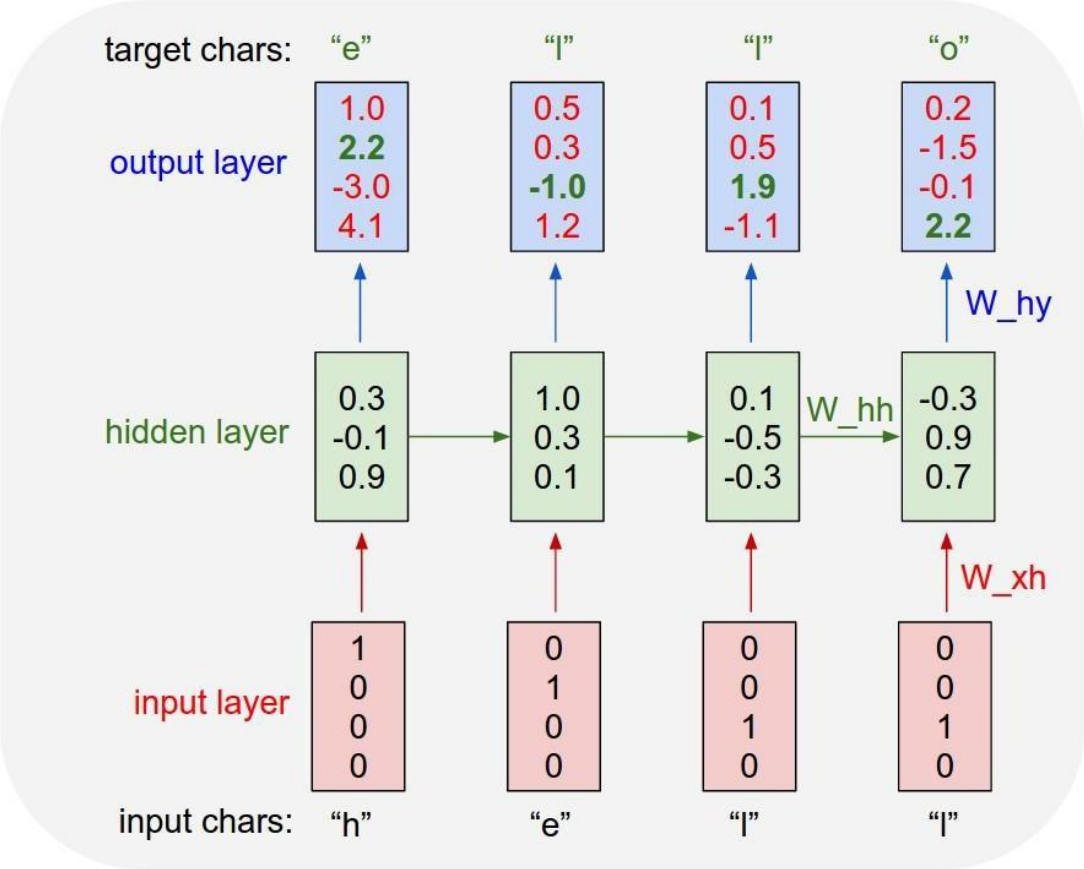

THE SONNETS

by William Shakespeare

From fairest creatures we desire increase,
That thereby beauty's rose might never die,
But as the riper should by time decease,
His tender heir might bear his memory:
But thou, contracted to thine own bright eyes,
Feed'st thy light's flame with self-substantial fuel,
Making a famine where abundance lies,
Thyself thy foe, to thy sweet self too cruel:
Thou that art now the world's fresh ornament,
And only herald to the gaudy spring,
Within thine own bud buriest thy content,
And tender churl mak'st waste in niggarding:
    Pity the world, or else this glutton be,
    To eat the world's due, by the grave and thee.

When forty winters shall besiege thy brow,
And dig deep trenches in thy beauty's field,
Thy youth's proud livery so gazed on now,
Will be a tatter'd weed of small worth held:
Then being asked, where all thy beauty lies,
Where all the treasure of thy lusty days;
To say, within thine own deep sunken eyes,
Were an all-eating shame, and thriftless praise.
How much more praise deserv'd thy beauty's use,
If thou couldst answer 'This fair child of mine
Shall sum my count, and make my old excuse,'
Proving his beauty by succession thine!
    This were to be new made when thou art old,
    And see thy blood warm when thou feel'st it cold.

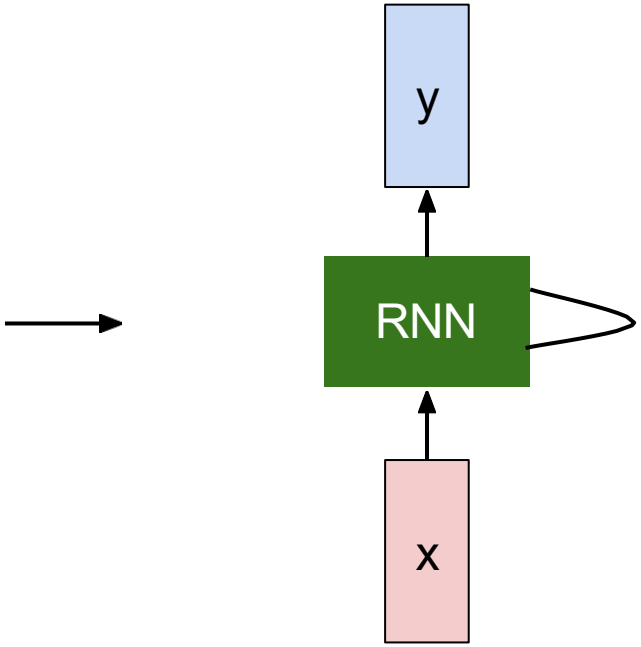

Exp

at first:

```
tyntd-iafhatawiaoihrdemot  lytdws  e ,tfti, astai f ogoh eoase rrranbyne 'nhthnee e
plia tklrgd t o idoe ns,smtt   h ne etie h,hregtrs nigtike,aoaenns lng
```

train more

```
"Tmont thithey" fomesscerliund
Keushey. Thom here
sheulke, anmerenith ol sivh I lalterthend Bleipile shuwy fil on aseterlome
coaniogennc Phe lism thond hon at. MeiDimorotion in ther thize."
```

train more

```
Aftair fall unsuch that the hall for Prince Velzonski's that me of
her hearly, and behs to so arwage fiving were to it beloge, pavu say falling misfort
how, and Gogition is so overelical and ofter.
```

train more

```
"Why do what that day," replied Natasha, and wishing to himself the fact the
princess, Princess Mary was easier, fed in had oftened him.
Pierre aking his soul came to the packs and drove up his father-in-law women.
```

PANDARUS:
Alas, I think he shall be come approached and the day
When little srain would be attain'd into being never fed,
And who is but a chain and subjects of his death,
I should not sleep.

Second Senator:
They are away this miseries, produced upon my soul,
Breaking and strongly should be buried, when I perish
The earth and thoughts of many states.

DUKE VINCENTIO:
Well, your wit is in the care of side and that.

Second Lord:
They would be ruled after this chamber, and
my fair nues begun out of the fact, to be conveyed,
Whose noble souls I'll have the heart of the wars.

Clown:
Come, sir, I will make did behold your worship.

VIOLA:
I'll drink it.

VIOLA:
Why, Salisbury must find his flesh and thought
That which I am not aps, not a man and in fire,
To show the reining of the raven and the wars
To grace my hand reproach within, and not a fair are hand,
That Caesar and my goodly father's world;
When I was heaven of presence and our fleets,
We spare with hours, but cut thy council I am great,
Murdered and by thy master's ready there
My power to give thee but so much as hell:
Some service in the noble bondman here,
Would show him to her wine.

KING LEAR:
O, if you were a feeble sight, the courtesy of your law,
Your sight and several breath, will wear the gods
With his heads, and my hands are wonder'd at the deeds,
So drop upon your lordship's head, and your opinion
Shall be against your honour.

The Stacks Project: open source algebraic geometry textbook

The Stacks Project

home about tags explained tag lookup browse search bibliography recent comments blog add slogans

Browse chapters

Part	Chapter	online	TeX source	view pdf
Preliminaries				
	1. Introduction	online	tex	pdf
	2. Conventions	online	tex	pdf
	3. Set Theory	online	tex	pdf
	4. Categories	online	tex	pdf
	5. Topology	online	tex	pdf
	6. Sheaves on Spaces	online	tex	pdf
	7. Sites and Sheaves	online	tex	pdf
	8. Stacks	online	tex	pdf
	9. Fields	online	tex	pdf
	10. Commutative Algebra	online	tex	pdf

Parts

1. Preliminaries
2. Schemes
3. Topics in Scheme Theory
4. Algebraic Spaces
5. Topics in Geometry
6. Deformation Theory
7. Algebraic Stacks
8. Miscellany

Statistics

The Stacks project now consists of

- 455910 lines of code
- 14221 tags (56 inactive tags)
- 2366 sections

Link for math materialsLink for math materials

The stacks project is licensed under the GNU Free Documentation License

Latex source

For $\bigoplus_{n=1,\ldots,m}$ where $\mathcal{L}_{m_\bullet} = 0$, hence we can find a closed subset $\mathcal{H}$ in $\mathcal{H}$ and any sets $\mathcal{F}$ on X, U is a closed immersion of S, then $U \to T$ is a separated algebraic space.

Proof. Proof of (1). It also start we get

$$S = \mathrm{Spec}(R) = U \times_X U \times_X U$$

and the comparicoly in the fibre product covering we have to prove the lemma generated by $\coprod Z \times_U U \to V$. Consider the maps M along the set of points Sch_{fppf} and $U \to U$ is the fibre category of S in U in Section, ?? and the fact that any U affine, see Morphisms, Lemma ??. Hence we obtain a scheme S and any open subset $W \subset U$ in $Sh(G)$ such that $\mathrm{Spec}(R') \to S$ is smooth or an

$$U = \bigcup U_i \times_{S_i} U_i$$

which has a nonzero morphism we may assume that f_i is of finite presentation over S. We claim that $\mathcal{O}_{X,x}$ is a scheme where $x, x', s'' \in S'$ such that $\mathcal{O}_{X,x'} \to \mathcal{O}'_{X',x'}$ is separated. By Algebra, Lemma ?? we can define a map of complexes $\mathrm{GL}_{S'}(x'/S'')$ and we win. □

To prove study we see that $\mathcal{F}|_U$ is a covering of $\mathcal{X}'$, and $\mathcal{T}_i$ is an object of $\mathcal{F}_{X/S}$ for $i > 0$ and $\mathcal{F}_p$ exists and let $\mathcal{F}_i$ be a presheaf of $\mathcal{O}_X$-modules on $\mathcal{C}$ as a $\mathcal{F}$-module. In particular $\mathcal{F} = U/\mathcal{F}$ we have to show that

$$\widetilde{M}^\bullet = \mathcal{I}^\bullet \otimes_{\mathrm{Spec}(k)} \mathcal{O}_{S,s} - i_X^{-1}\mathcal{F})$$

is a unique morphism of algebraic stacks. Note that

$$\mathrm{Arrows} = (Sch/S)^{opp}_{fppf}, (Sch/S)_{fppf}$$

and

$$V = \Gamma(S, \mathcal{O}) \longmapsto (U, \mathrm{Spec}(A))$$

is an open subset of X. Thus U is affine. This is a continuous map of X is the inverse, the groupoid scheme S.

Proof. See discussion of sheaves of sets. □

The result for prove any open covering follows from the less of Example ??. It may replace S by $X_{spaces,étale}$ which gives an open subspace of X and T equal to S_{Zar}, see Descent, Lemma ??. Namely, by Lemma ?? we see that R is geometrically regular over S.

Lemma 0.1. *Assume (3) and (3) by the construction in the description.*

Suppose $X = \lim |X|$ (by the formal open covering X and a single map $\underline{Proj}_X(\mathcal{A}) = \mathrm{Spec}(B)$ over U compatible with the complex

$$Set(\mathcal{A}) = \Gamma(X, \mathcal{O}_{X,\mathcal{O}_X}).$$

When in this case of to show that $\mathcal{Q} \to \mathcal{C}_{Z/X}$ is stable under the following result in the second conditions of (1), and (3). This finishes the proof. By Definition ?? (without element is when the closed subschemes are catenary. If T is surjective we may assume that T is connected with residue fields of S. Moreover there exists a closed subspace $Z \subset X$ of X where U in X' is proper (some defining as a closed subset of the uniqueness it suffices to check the fact that the following theorem

(1) *f is locally of finite type. Since $S = \mathrm{Spec}(R)$ and $Y = \mathrm{Spec}(R)$.*

Proof. This is form all sheaves of sheaves on X. But given a scheme U and a surjective étale morphism $U \to X$. Let $U \cap U = \coprod_{i=1,\ldots,n} U_i$ be the scheme X over S at the schemes $X_i \to X$ and $U = \lim_i X_i$. □

The following lemma surjective restrocomposes of this implies that $\mathcal{F}_{x_0} = \mathcal{F}_{x_0} = \mathcal{F}_{\mathcal{X},\ldots,0}$.

Lemma 0.2. *Let X be a locally Noetherian scheme over S, $E = \mathcal{F}_{X/S}$. Set $\mathcal{I} = \mathcal{J}_1 \subset \mathcal{I}'_n$. Since $\mathcal{I}^n \subset \mathcal{I}^n$ are nonzero over $i_0 \leq \mathfrak{p}$ is a subset of $\mathcal{J}_{n,0} \circ \overline{A}_2$ works.*

Lemma 0.3. *In Situation ??. Hence we may assume $\mathfrak{q}' = 0$.*

Proof. We will use the property we see that $\mathfrak{p}$ is the mext functor (??). On the other hand, by Lemma ?? we see that

$$D(\mathcal{O}_{X'}) = \mathcal{O}_X(D)$$

where K is an F-algebra where δ_{n+1} is a scheme over S. □

Proof. Omitted. $\square$

Lemma 0.1. *Let $\mathcal{C}$ be a set of the construction.*

Let $\mathcal{C}$ be a gerber covering. Let $\mathcal{F}$ be a quasi-coherent sheaves of $\mathcal{O}$-modules. We have to show that

$$\mathcal{O}_{\mathcal{O}_X} = \mathcal{O}_X(\mathcal{L})$$

.

Proof. This is an algebraic space with the composition of sheaves $\mathcal{F}$ on $X_{\acute{e}tale}$ we have

$$\mathcal{O}_X(\mathcal{F}) = \{morph_1 \times_{\mathcal{O}_X} (\mathcal{G}, \mathcal{F})\}$$

where $\mathcal{G}$ defines an isomorphism $\mathcal{F} \to \mathcal{F}$ of $\mathcal{O}$-modules. $\square$

Lemma 0.2. *This is an integer $\mathcal{Z}$ is injective.*

Proof. See Spaces, Lemma **??**. $\square$

Lemma 0.3. *Let S be a scheme. Let X be a scheme and X is an affine open covering. Let $\mathcal{U} \subset \mathcal{X}$ be a canonical and locally of finite type. Let X be a scheme. Let X be a scheme which is equal to the formal complex.*

The following to the construction of the lemma follows.

Let X be a scheme. Let X be a scheme covering. Let

$$b : X \to Y' \to Y \to Y \to Y' \times_X Y \to X.$$

be a morphism of algebraic spaces over S and Y.

Proof. Let X be a nonzero scheme of X. Let X be an algebraic space. Let $\mathcal{F}$ be a quasi-coherent sheaf of $\mathcal{O}_X$-modules. The following are equivalent

(1) $\mathcal{F}$ is an algebraic space over S.
(2) If X is an affine open covering.

Consider a common structure on X and X the functor $\mathcal{O}_X(U)$ which is locally of finite type. $\square$

This since $\mathcal{F} \in \mathcal{F}$ and $x \in \mathcal{G}$ the diagram

$$\begin{tikzcd}
\mathcal{S} \arrow[r] \arrow[d] & & \\
\xi \arrow[r] & \mathcal{O}_{X'} \arrow[dr] & \\
\mathrm{gor}_s \arrow[u] & & \\
 & = \alpha' \arrow[r] \arrow[d, leftrightarrow] & \\
 & = \alpha' \arrow[r] & \alpha \\
\mathrm{Spec}(K_\psi) & \mathrm{Mor}_{Sets} & \mathrm{d}(\mathcal{O}_{\mathcal{X}_{X/k}}, \mathcal{G}) \arrow[u, from=1-3, "X"]
\end{tikzcd}$$

is a limit. Then $\mathcal{G}$ is a finite type and assume S is a flat and $\mathcal{F}$ and $\mathcal{G}$ is a finite type f_*. This is of finite type diagrams, and

- the composition of $\mathcal{G}$ is a regular sequence,
- $\mathcal{O}_{X'}$ is a sheaf of rings.

$\square$

Proof. We have see that $X = \mathrm{Spec}(R)$ and $\mathcal{F}$ is a finite type representable by algebraic space. The property $\mathcal{F}$ is a finite morphism of algebraic stacks. Then the cohomology of X is an open neighbourhood of U. $\square$

Proof. This is clear that $\mathcal{G}$ is a finite presentation, see Lemmas **??**.
A *reduced above* we conclude that U is an open covering of $\mathcal{C}$. The functor $\mathcal{F}$ is a "field

$$\mathcal{O}_{X,x} \longrightarrow \mathcal{F}_{\overline{x}} \quad \text{-1}(\mathcal{O}_{X_{\acute{e}tale}}) \longrightarrow \mathcal{O}_{X_t}^{-1}\mathcal{O}_{X_\lambda}(\mathcal{O}_{X_\eta}^{\overline{v}})$$

is an isomorphism of covering of $\mathcal{O}_{X_i}$. If $\mathcal{F}$ is the unique element of $\mathcal{F}$ such that X is an isomorphism.
The property $\mathcal{F}$ is a disjoint union of Proposition **??** and we can filtered set of presentations of a scheme $\mathcal{O}_X$-algebra with $\mathcal{F}$ are opens of finite type over S.
If $\mathcal{F}$ is a scheme theoretic image points. $\square$

If $\mathcal{F}$ is a finite direct sum $\mathcal{O}_{X_\lambda}$ is a closed immersion, see Lemma **??**. This is a sequence of $\mathcal{F}$ is a similar morphism.

This repository Search

Explore Gist Blog Help

karpathy

torvalds / linux

Watch 3,711 Star 23,054 Fork 9,141

Linux kernel source tree

520,037 commits 1 branch 420 releases 5,039 contributors

branch: master linux / +

Merge branch 'drm-fixes' of git://people.freedesktop.org/~airlied/linux

torvalds authored 9 hours ago latest commit 4b1706927d

Documentation	Merge git://git.kernel.org/pub/scm/linux/kernel/git/nab/target-pending	6 days ago
arch	Merge branch 'x86-urgent-for-linus' of git://git.kernel.org/pub/scm/l...	a day ago
block	block: discard bdi_unregister() in favour of bdi_destroy()	9 days ago
crypto	Merge git://git.kernel.org/pub/scm/linux/kernel/git/herbert/crypto-2.6	10 days ago
drivers	Merge branch 'drm-fixes' of git://people.freedesktop.org/~airlied/linux	9 hours ago
firmware	firmware/ihex2fw.c: restore missing default in switch statement	2 months ago
fs	vfs: read file_handle only once in handle_to_path	4 days ago
include	Merge branch 'perf-urgent-for-linus' of git://git.kernel.org/pub/scm/...	a day ago
init	init: fix regression by supporting devices with major:minor:offset fo...	a month ago

Code

Pull requests 74

Pulse

Graphs

HTTPS clone URL

https://github.c

You can clone with HTTPS, SSH, or Subversion.

Clone in Desktop

Download ZIP

```c
static void do_command(struct seq_file *m, void *v)
{
  int column = 32 << (cmd[2] & 0x80);
  if (state)
    cmd = (int)(int_state ^ (in_8(&ch->ch_flags) & Cmd) ? 2 : 1);
  else
    seq = 1;
  for (i = 0; i < 16; i++) {
    if (k & (1 << 1))
      pipe = (in_use & UMXTHREAD_UNCCA) +
        ((count & 0x00000000fffffff8) & 0x000000f) << 8;
    if (count == 0)
      sub(pid, ppc_md.kexec_handle, 0x20000000);
    pipe_set_bytes(i, 0);
  }
  /* Free our user pages pointer to place camera if all dash */
  subsystem_info = &of_changes[PAGE_SIZE];
  rek_controls(offset, idx, &soffset);
  /* Now we want to deliberately put it to device */
  control_check_polarity(&context, val, 0);
  for (i = 0; i < COUNTER; i++)
    seq_puts(s, "policy ");
}
```

Generated C code

Exp

```
/*
 *  Copyright (c) 2006-2010, Intel Mobile Communications.  All rights reserved.
 *
 *   This program is free software; you can redistribute it and/or modify it
 * under the terms of the GNU General Public License version 2 as published by
 * the Free Software Foundation.
 *
 *        This program is distributed in the hope that it will be useful,
 * but WITHOUT ANY WARRANTY; without even the implied warranty of
 *   MERCHANTABILITY or FITNESS FOR A PARTICULAR PURPOSE.  See the
 *
 *  GNU General Public License for more details.
 *
 *   You should have received a copy of the GNU General Public License
 *    along with this program; if not, write to the Free Software Foundation,
 *  Inc., 675 Mass Ave, Cambridge, MA 02139, USA.
 */

#include <linux/kexec.h>
#include <linux/errno.h>
#include <linux/io.h>
#include <linux/platform_device.h>
#include <linux/multi.h>
#include <linux/ckevent.h>

#include <asm/io.h>
#include <asm/prom.h>
#include <asm/e820.h>
#include <asm/system_info.h>
#include <asm/setew.h>
#include <asm/pgproto.h>
```

Image Captioning

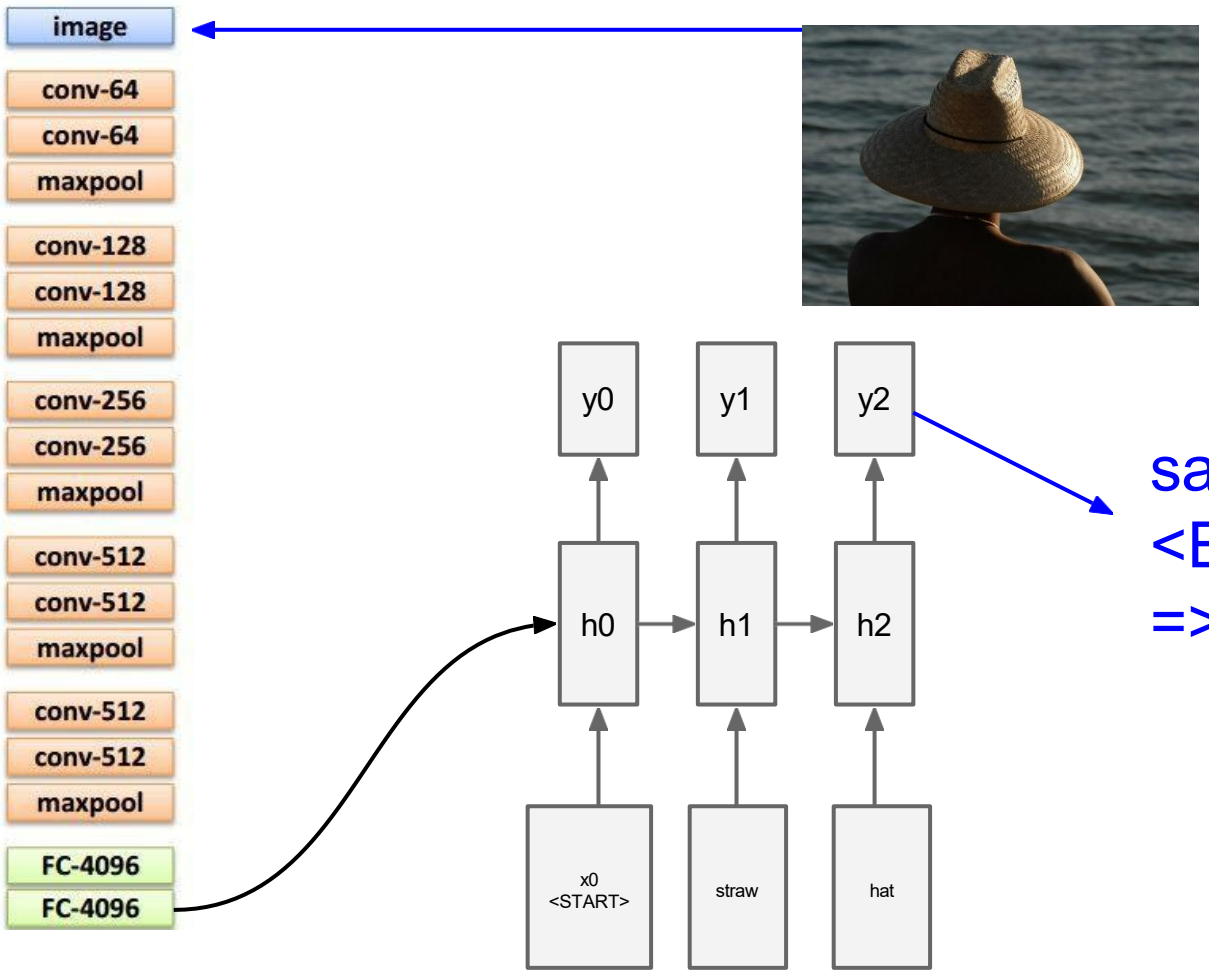

test image

sample
<END> token
=> finish.

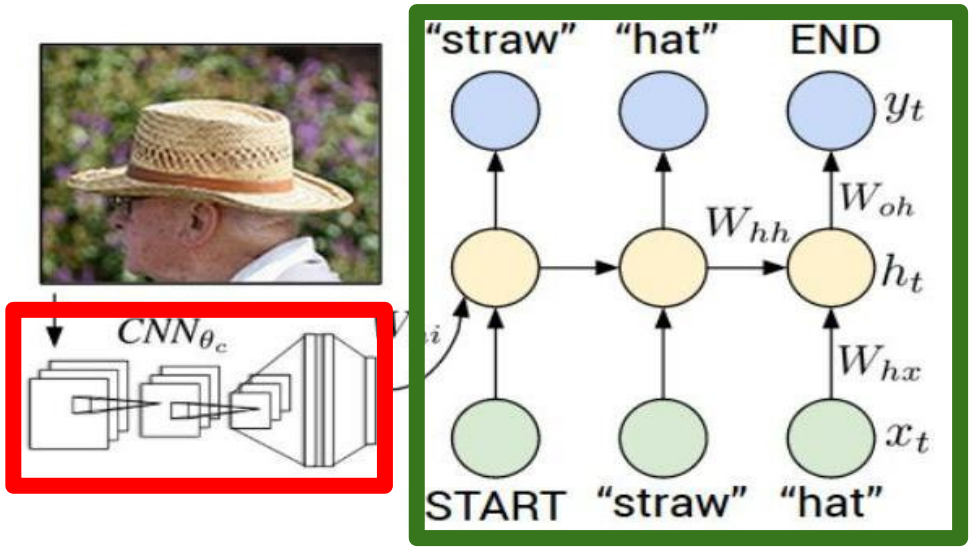

Image Captioning

Captions generated using neuraltalk2
All images are CC0 Public domain:
cat suitcase, cat tree, dog, bear,
surfers, tennis, giraffe, motorcycle

A cat sitting on a suitcase on the floor

A cat is sitting on a tree branch

A dog is running in the grass with a frisbee

A white teddy bear sitting in the grass

Two people walking on the beach with surfboards

A tennis player in action on the court

Two giraffes standing in a grassy field

A man riding a dirt bike on a dirt track

Visual Question Answering (VQA)

Q: What endangered animal is featured on the truck?

A: A bald eagle.
A: A sparrow.
A: A humming bird.
A: A raven.

Q: Where will the driver go if turning right?

A: Onto 24 ¾ Rd.
A: Onto 25 ¾ Rd.
A: Onto 23 ¾ Rd.
A: Onto Main Street.

Q: When was the picture taken?

A: During a wedding.
A: During a bar mitzvah.
A: During a funeral.
A: During a Sunday church service

Q: Who is under the umbrella?

A: Two women.
A: A child.
A: An old man.
A: A husband and a wife.

Agrawal et al, “VQA: Visual Question Answering”, ICCV 2015
Zhu et al, “Visual 7W: Grounded Question Answering in Images”, CVPR 2016
Figure from Zhu et al, copyright IEEE 2016. Reproduced for educational purposes.

Visual Question Answering (VQA)

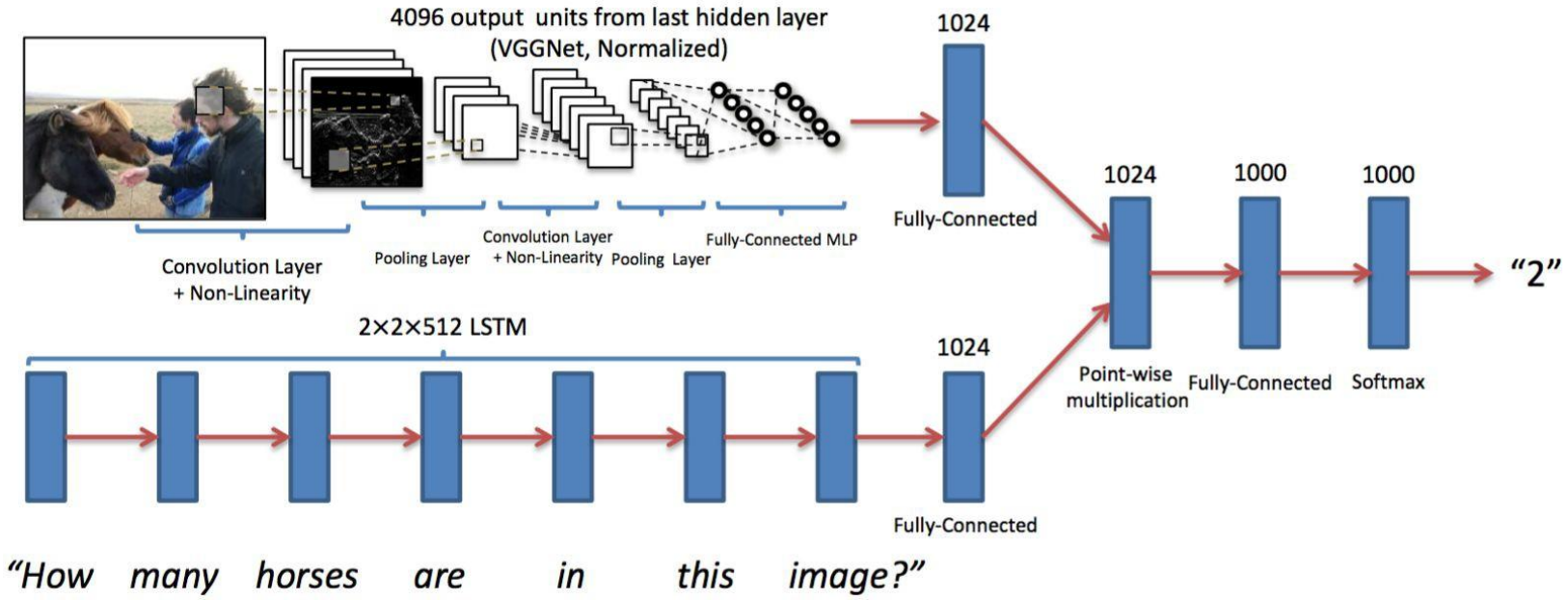

Agrawal et al, "Visual 7W: Grounded Question Answering in Images", CVPR 2015

Figures from Agrawal et al, copyright IEEE 2015. Reproduced for educational purposes.

RNN tradeoffs

- RNN Advantages:
  - Can process any length input
  - Computation for step *t* can (in theory) use information from many steps back
  - Model size doesn't increase for longer input
  - Same weights applied on every timestep, so there is symmetry in how inputs are processed.
- RNN Disadvantages:
  - Recurrent computation is slow
  - In practice, difficult to access information from many steps back

Long Short Term Memory (LSTM)

Vanilla RNN Gradient Flow

Bengio et al, “Learning long-term dependencies with gradient descent is difficult”, IEEE Transactions on Neural Networks, 1994
Pascanu et al, “On the difficulty of training recurrent neural networks”, ICML 2013

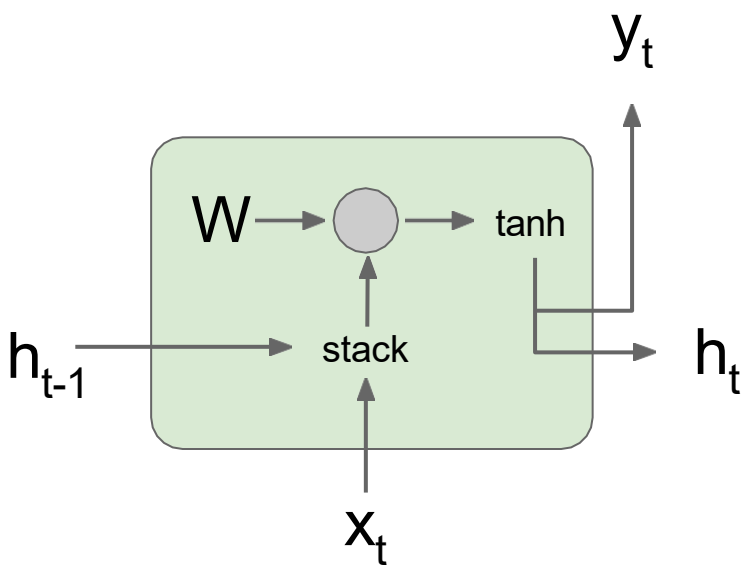

$$
\begin{aligned}
h_t &= \tanh(W_{hh}h_{t-1} + W_{xh}x_t) \\
&= \tanh\left(\begin{pmatrix} W_{hh} & W_{hx} \end{pmatrix}\begin{pmatrix} h_{t-1} \\ x_t \end{pmatrix}\right) \\
&= \tanh\left(W\begin{pmatrix} h_{t-1} \\ x_t \end{pmatrix}\right)
\end{aligned}
$$

Vanilla RNN Gradient Flow

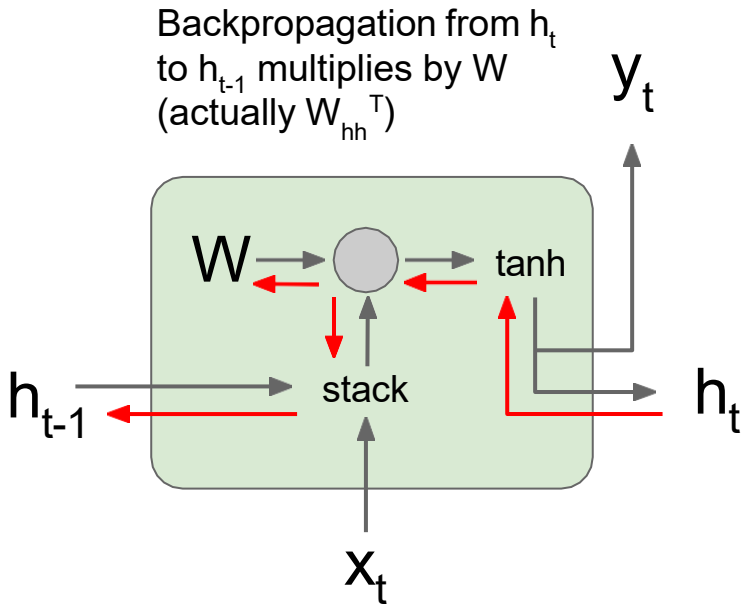

Bengio et al, "Learning long-term dependencies with gradient descent is difficult", IEEE Transactions on Neural Networks, 1994
Pascanu et al, "On the difficulty of training recurrent neural networks", ICML 2013

$$
\begin{aligned}
h_t &= \tanh(W_{hh}h_{t-1} + W_{xh}x_t) \\
&= \tanh\left(\begin{pmatrix} W_{hh} & W_{hx} \end{pmatrix}\begin{pmatrix} h_{t-1} \\ x_t \end{pmatrix}\right) \\
&= \tanh\left(W\begin{pmatrix} h_{t-1} \\ x_t \end{pmatrix}\right)
\end{aligned}
$$

Vanilla RNN Gradient Flow

Backpropagation from h_t to h_{t-1} multiplies by W (actually W_{hh}^T)

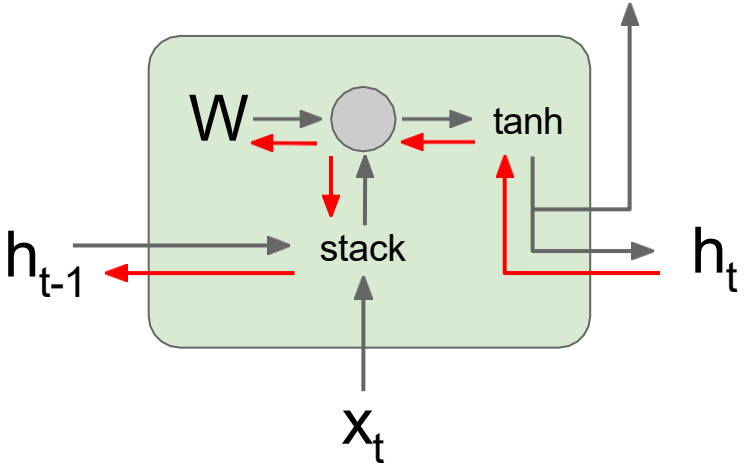

Bengio et al, "Learning long-term dependencies with gradient descent is difficult", IEEE Transactions on Neural Networks, 1994
Pascanu et al, "On the difficulty of training recurrent neural networks", ICML 2013

$$
\begin{aligned}
h_t &= \tanh(W_{hh}h_{t-1} + W_{xh}x_t) \\
&= \tanh\left(\begin{pmatrix} W_{hh} & W_{hx} \end{pmatrix}\begin{pmatrix} h_{t-1} \\ x_t \end{pmatrix}\right) \\
&= \tanh\left(W\begin{pmatrix} h_{t-1} \\ x_t \end{pmatrix}\right)
\end{aligned}
$$

$$
\frac{\partial h_t}{\partial h_{t-1}} = tanh'(W_{hh}h_{t-1} + W_{xh}x_t)W_{hh}
$$

Vanilla RNN Gradient Flow

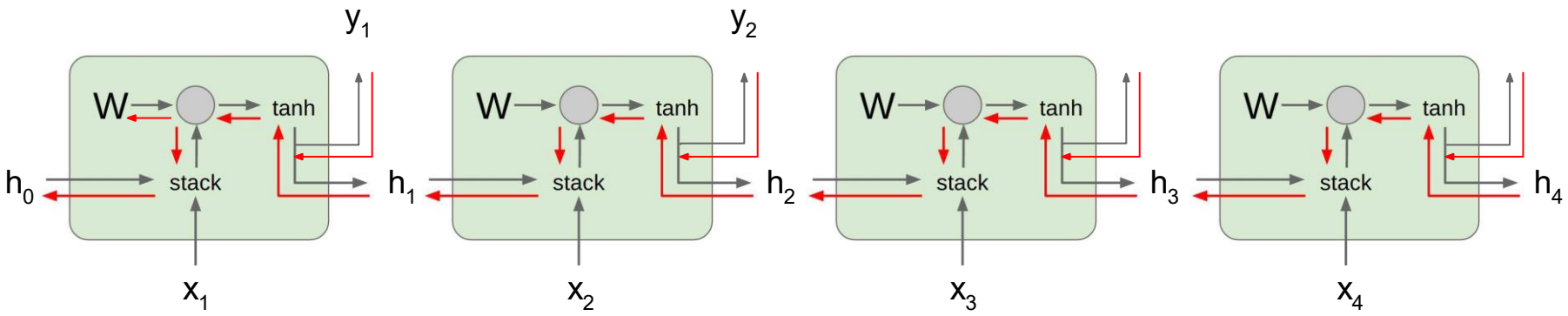

$$\frac{\partial L}{\partial W} = \sum_{t=1}^{T} \frac{\partial L_t}{\partial W}$$

Vanilla RNN Gradient Flow

Bengio et al, “Learning long-term dependencies with gradient descent is difficult”, IEEE Transactions on Neural Networks, 1994
Pascanu et al, “On the difficulty of training recurrent neural networks”, ICML 2013

Gradients over multiple time steps:

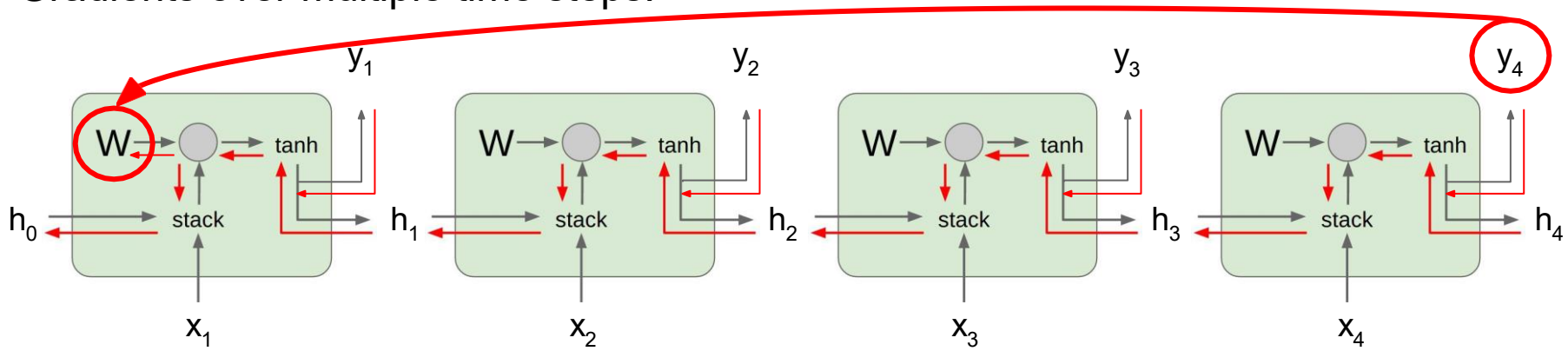

$$\frac{\partial L}{\partial W} = \sum_{t=1}^{T} \frac{\partial L_t}{\partial W}$$

$$\frac{\partial L_T}{\partial W} = \frac{\partial L_T}{\partial h_T} \frac{\partial h_t}{\partial h_{t-1}} \cdots \frac{\partial h_1}{\partial W}$$

Vanilla RNN Gradient Flow

Bengio et al, “Learning long-term dependencies with gradient descent is difficult”, IEEE Transactions on Neural Networks, 1994
Pascanu et al, “On the difficulty of training recurrent neural networks”, ICML 2013

Gradients over multiple time steps:

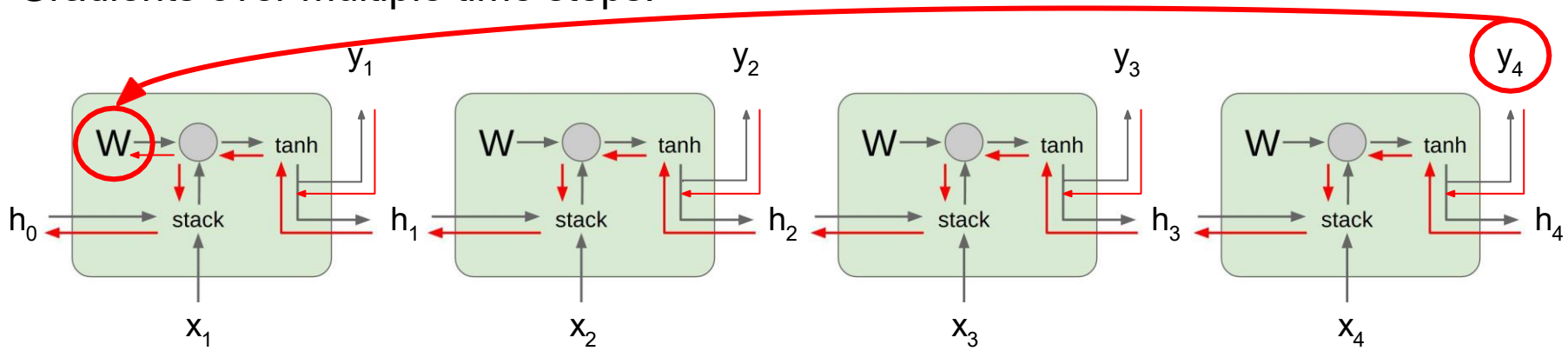

$$\frac{\partial L}{\partial W} = \sum_{t=1}^{T} \frac{\partial L_t}{\partial W}$$

$$\frac{\partial L_T}{\partial W} = \frac{\partial L_T}{\partial h_T} \frac{\partial h_t}{\partial h_{t-1}} \cdots \frac{\partial h_1}{\partial W} = \frac{\partial L_T}{\partial h_T} \left(\prod_{t=2}^{T} \frac{\partial h_t}{\partial h_{t-1}} \right) \frac{\partial h_1}{\partial W}$$

Vanilla RNN Gradient Flow

Bengio et al, “Learning long-term dependencies with gradient descent is difficult”, IEEE Transactions on Neural Networks, 1994
Pascanu et al, “On the difficulty of training recurrent neural networks”, ICML 2013

Gradients over multiple time steps:

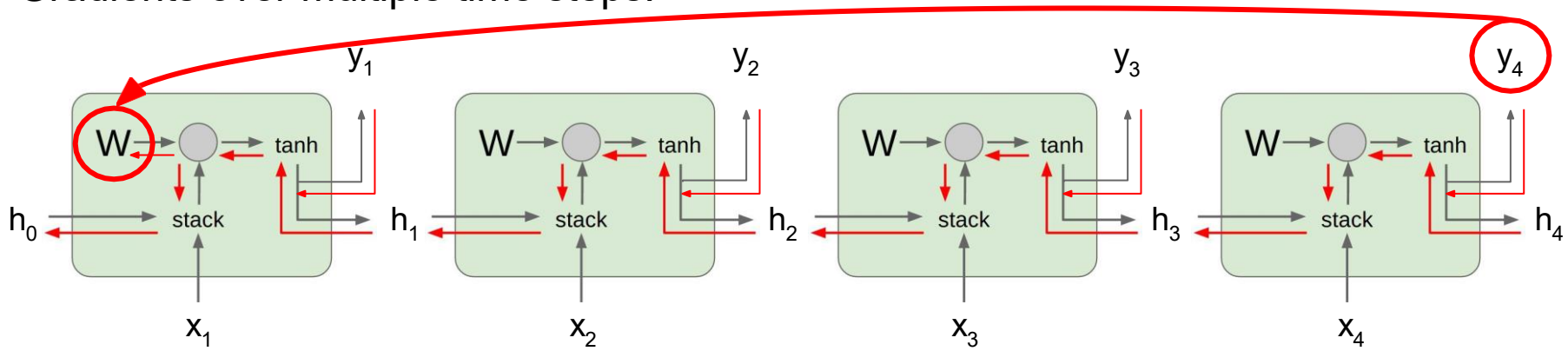

$$\frac{\partial L}{\partial W} = \sum_{t=1}^{T} \frac{\partial L_t}{\partial W}$$

$$\boxed{\frac{\partial h_t}{\partial h_{t-1}} = tanh'(W_{hh} h_{t-1} + W_{xh} x_t) W_{hh}}$$

$$\frac{\partial L_T}{\partial W} = \frac{\partial L_T}{\partial h_T} \frac{\partial h_t}{\partial h_{t-1}} \cdots \frac{\partial h_1}{\partial W} = \frac{\partial L_T}{\partial h_T} \left(\prod_{t=2}^{T} \boxed{\frac{\partial h_t}{\partial h_{t-1}}} \right) \frac{\partial h_1}{\partial W}$$

Vanilla RNN Gradient Flow

Bengio et al, "Learning long-term dependencies with gradient descent is difficult", IEEE Transactions on Neural Networks, 1994
Pascanu et al, "On the difficulty of training recurrent neural networks", ICML 2013

Gradients over multiple time steps:

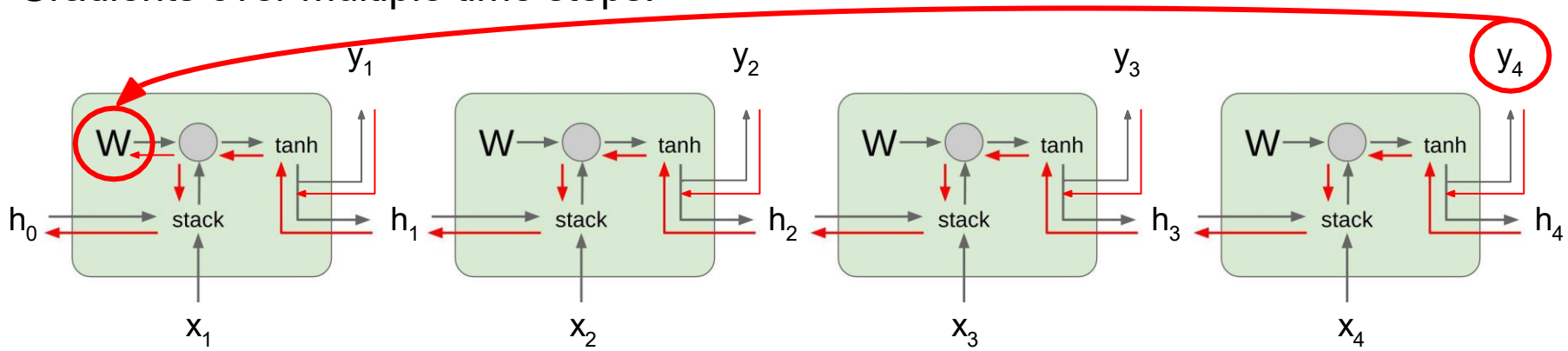

$$\frac{\partial L}{\partial W} = \sum_{t=1}^{T} \frac{\partial L_t}{\partial W}$$

Almost always < 1
Vanishing gradients

$$\frac{\partial L_T}{\partial W} = \frac{\partial L_T}{\partial h_T}\left(\prod_{t=2}^{T} \boxed{tanh'(W_{hh}h_{t-1} + W_{xh}x_t)}\right) W_{hh}^{T-1} \frac{\partial h_1}{\partial W}$$

Vanilla RNN Gradient Flow

Bengio et al, “Learning long-term dependencies with gradient descent is difficult”, IEEE Transactions on Neural Networks, 1994
Pascanu et al, “On the difficulty of training recurrent neural networks”, ICML 2013

Gradients over multiple time steps:

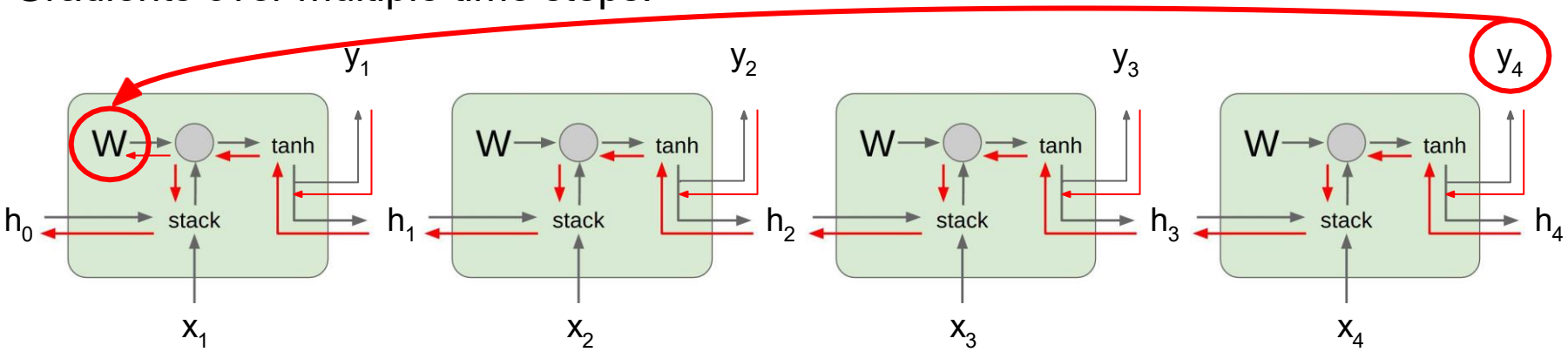

$$\frac{\partial L}{\partial W} = \sum_{t=1}^{T} \frac{\partial L_t}{\partial W}$$

What if we assumed no non-linearity?

Vanilla RNN Gradient Flow

Bengio et al, "Learning long-term dependencies with gradient descent is difficult", IEEE Transactions on Neural Networks, 1994
Pascanu et al, "On the difficulty of training recurrent neural networks", ICML 2013

Gradients over multiple time steps:

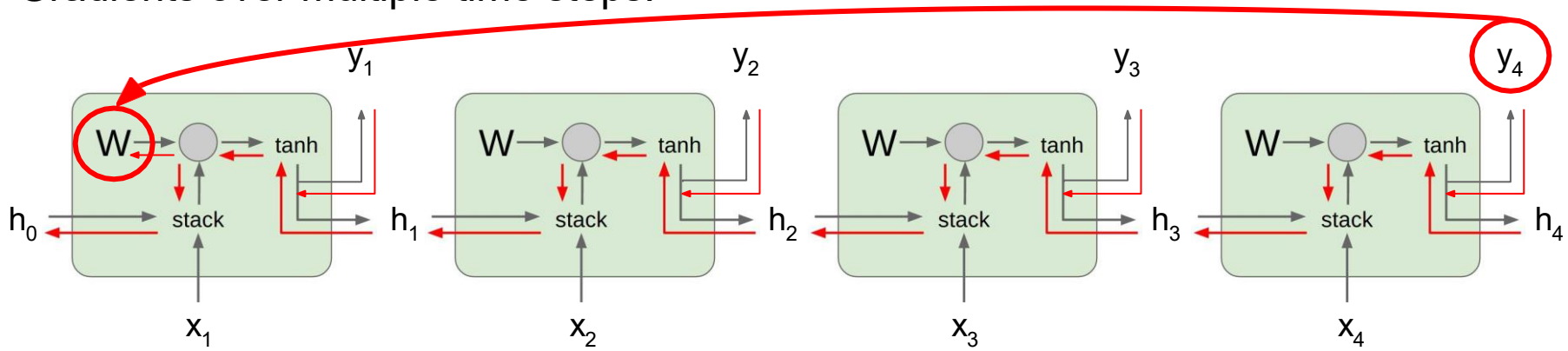

$$\frac{\partial L}{\partial W} = \sum_{t=1}^{T} \frac{\partial L_t}{\partial W}$$

What if we assumed no non-linearity?

$$\frac{\partial L_T}{\partial W} = \frac{\partial L_T}{\partial h_T} \boxed{W_{hh}^{T-1}} \frac{\partial h_1}{\partial W}$$

Largest singular value > 1:
Exploding gradients

Largest singular value < 1:
Vanishing gradients

Vanilla RNN Gradient Flow

Bengio et al, "Learning long-term dependencies with gradient descent is difficult", IEEE Transactions on Neural Networks, 1994
Pascanu et al, "On the difficulty of training recurrent neural networks", ICML 2013

Gradients over multiple time steps:

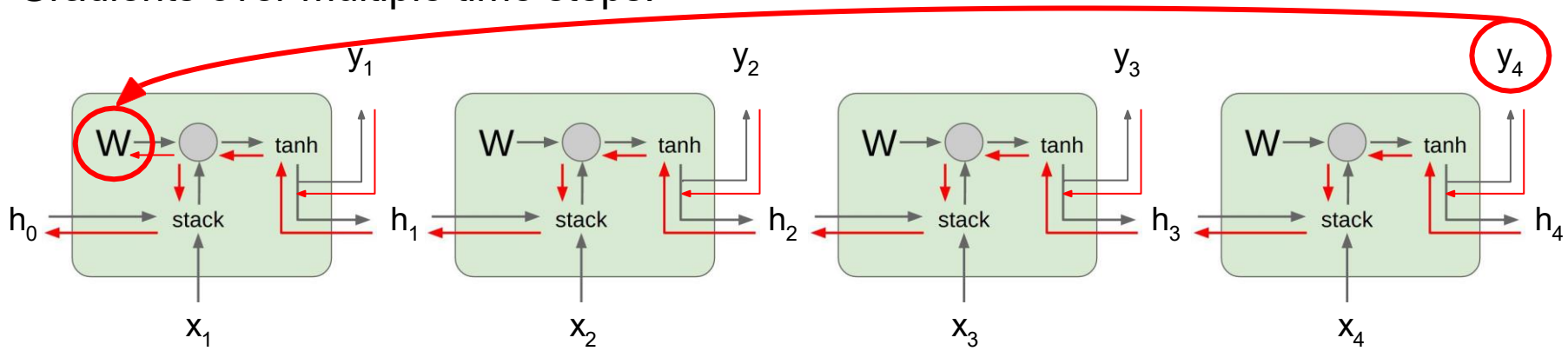

$$\frac{\partial L}{\partial W} = \sum_{t=1}^{T} \frac{\partial L_t}{\partial W}$$

$$\frac{\partial L_T}{\partial W} = \frac{\partial L_T}{\partial h_T} \boxed{W_{hh}^{T-1}} \frac{\partial h_1}{\partial W}$$

What if we assumed no non-linearity?

Largest singular value > 1:
Exploding gradients

Largest singular value < 1:
Vanishing gradients

→ **Gradient clipping**: Scale gradient if its norm is too big

```
grad_norm = np.sum(grad * grad)
if grad_norm > threshold:
  grad *= (threshold / grad_norm)
```

Long Short Term Memory (LSTM)

- LSTM has two hidden states: cell state and hidden state

Vanilla RNN

$$h_t = \tanh\left(W\begin{pmatrix} h_{t-1} \\ x_t \end{pmatrix}\right)$$

LSTM

Four gates

$$\begin{pmatrix} i \\ f \\ o \\ g \end{pmatrix} = \begin{pmatrix} \sigma \\ \sigma \\ \sigma \\ \tanh \end{pmatrix} W \begin{pmatrix} h_{t-1} \\ x_t \end{pmatrix}$$

Cell state

$$c_t = f \odot c_{t-1} + i \odot g$$

Hidden state

$$h_t = o \odot \tanh(c_t)$$

Long Short Term Memory (LSTM)

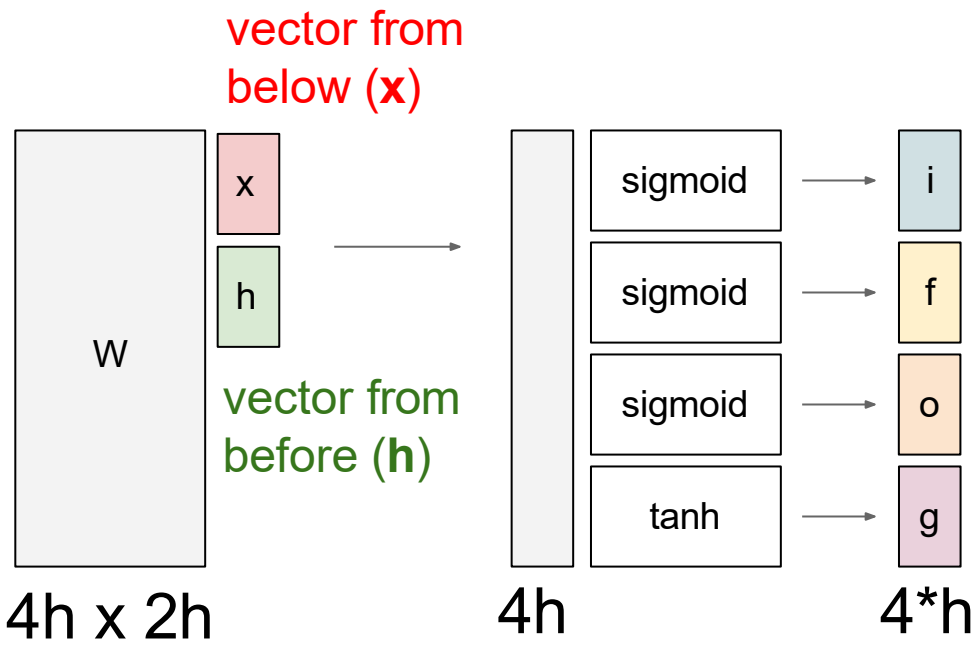

Long Short Term Memory (LSTM)

g: Gate gate (?), How much to write to cell

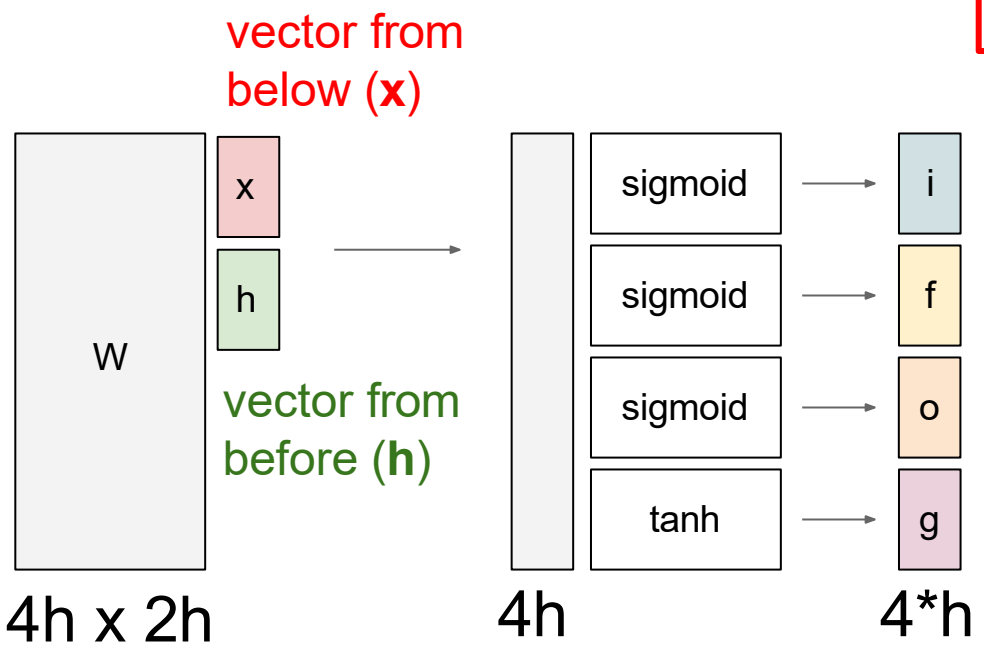

$$\begin{pmatrix} i \\ f \\ o \\ g \end{pmatrix} = \begin{pmatrix} \sigma \\ \sigma \\ \sigma \\ \boxed{\tanh} \end{pmatrix} W \begin{pmatrix} h_{t-1} \\ x_t \end{pmatrix}$$

$$c_t = f \odot c_{t-1} + i \odot \boxed{g}$$

$$h_t = o \odot \tanh(c_t)$$

Long Short Term Memory (LSTM)

i: Input gate, whether to write to cell

g: Gate gate (?), How much to write to cell

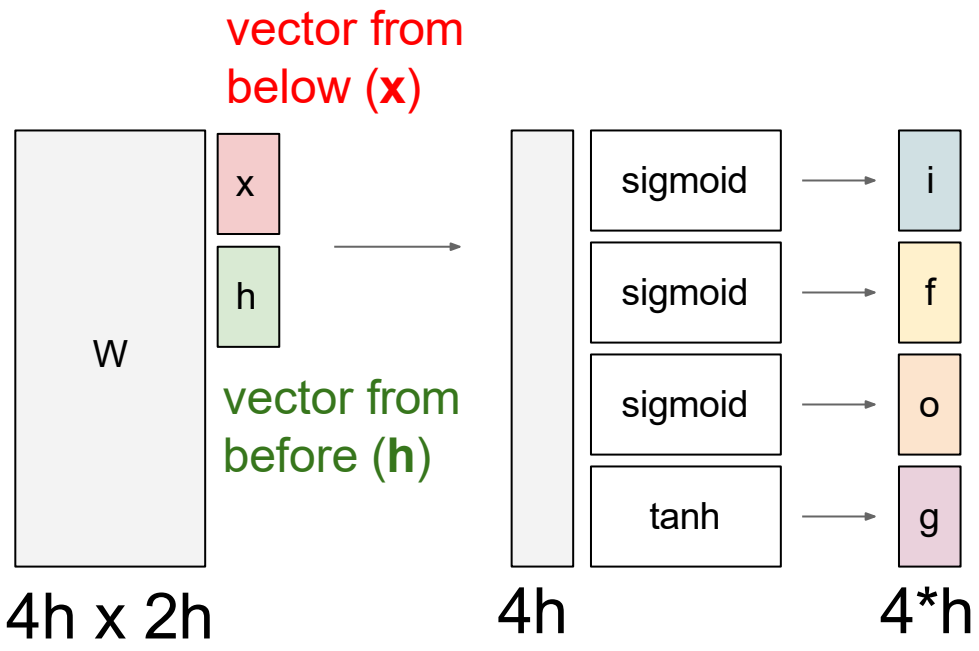

$$\begin{pmatrix} i \\ f \\ o \\ g \end{pmatrix} = \begin{pmatrix} \boxed{\sigma} \\ \sigma \\ \sigma \\ \tanh \end{pmatrix} W \begin{pmatrix} h_{t-1} \\ x_t \end{pmatrix}$$

$$c_t = f \odot c_{t-1} + \boxed{i} \odot g$$

$$h_t = o \odot \tanh(c_t)$$

Long Short Term Memory (LSTM)

i: Input gate, whether to write to cell
f: Forget gate, Whether to erase cell

g: Gate gate (?), How much to write to cell

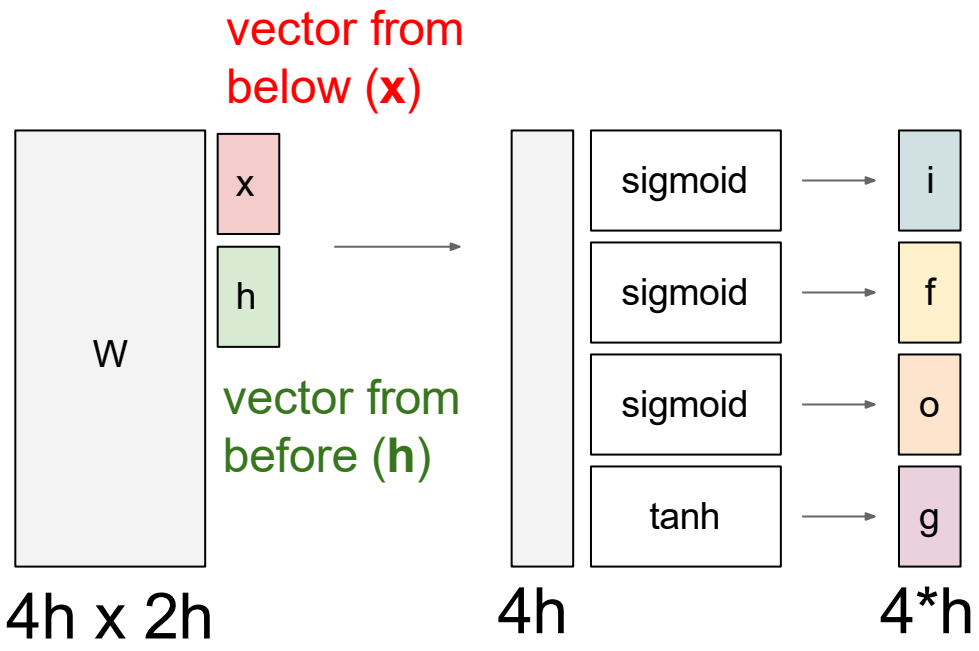

$$\begin{pmatrix} i \\ f \\ o \\ g \end{pmatrix} = \begin{pmatrix} \sigma \\ \boxed{\sigma} \\ \sigma \\ \tanh \end{pmatrix} W \begin{pmatrix} h_{t-1} \\ x_t \end{pmatrix}$$

$$c_t = \boxed{f} \odot c_{t-1} + i \odot g$$

$$h_t = o \odot \tanh(c_t)$$

Long Short Term Memory (LSTM)

i: Input gate, whether to write to cell
f: Forget gate, Whether to erase cell
o: Output gate, How much to reveal cell
g: Gate gate (?), How much to write to cell

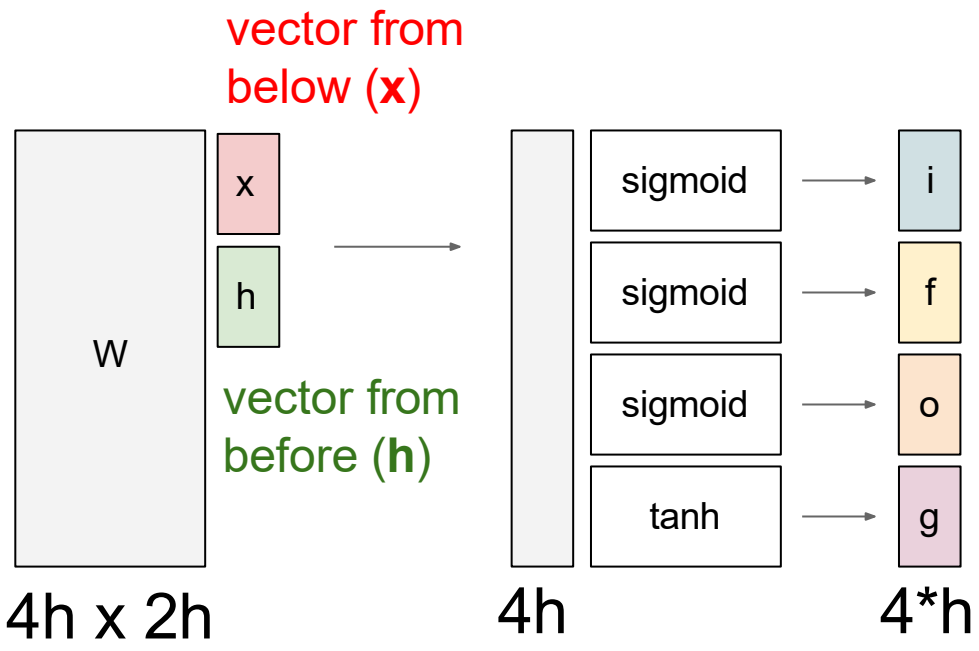

$$\begin{pmatrix} i \\ f \\ o \\ g \end{pmatrix} = \begin{pmatrix} \sigma \\ \sigma \\ \boxed{\sigma} \\ \tanh \end{pmatrix} W \begin{pmatrix} h_{t-1} \\ x_t \end{pmatrix}$$

$$c_t = f \odot c_{t-1} + i \odot g$$

$$h_t = \boxed{o} \odot \tanh(c_t)$$

Long Short Term Memory (LSTM)

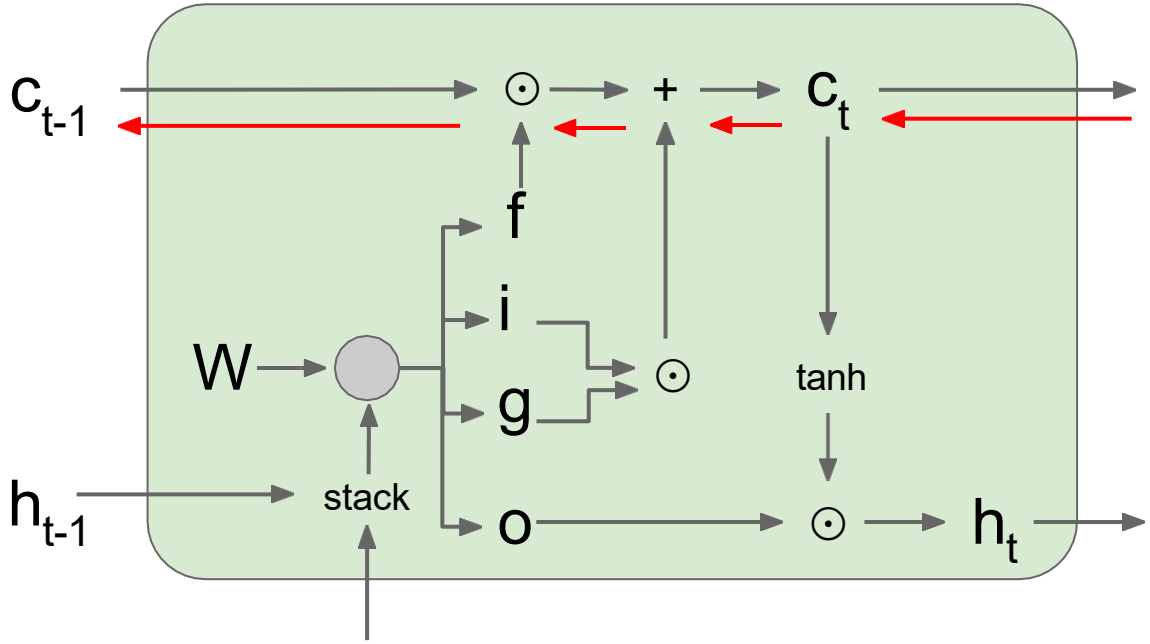

Backpropagation from c_t to c_{t-1} only elementwise multiplication by f, no matrix multiply by W

$$\begin{pmatrix} i \\ f \\ o \\ g \end{pmatrix} = \begin{pmatrix} \sigma \\ \sigma \\ \sigma \\ \tanh \end{pmatrix} W \begin{pmatrix} h_{t-1} \\ x_t \end{pmatrix}$$

$$c_t = f \odot c_{t-1} + i \odot g$$

$$h_t = o \odot \tanh(c_t)$$

Long Short Term Memory (LSTM)

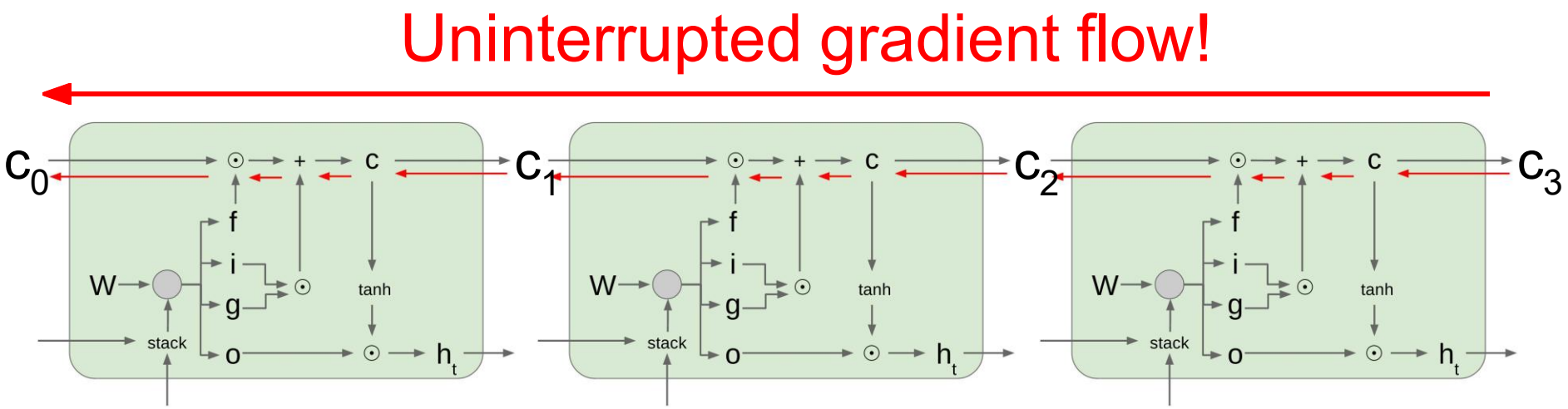

Do LSTMs solve the vanishing gradient problem?

- The LSTM architecture makes it easier for the RNN to preserve information over many timesteps
  - e.g. **if the f = 1 and the i = 0**, then the information of that cell is preserved indefinitely.
  - By contrast, it's harder for vanilla RNN to learn a recurrent weight matrix Wh that preserves info in hidden state
- LSTM **doesn't guarantee** that there is no vanishing/exploding gradient, but it does provide an easier way for the model to learn long-distance dependencies

Summary

- RNNs allow a lot of flexibility in architecture design
- Vanilla RNNs are simple but don't work very well
- Common to use LSTM: their additive interactions improve gradient flow
- Backward flow of gradients in RNN can explode or vanish.
  - Exploding is controlled with gradient clipping
  - Vanishing is controlled with additive interactions (LSTM)
- Better/simpler architectures are a hot topic of current research, as well as new paradigms for reasoning over sequences
- Better understanding (both theoretical and empirical) is needed.

References

- Stanford CS231n
- Dr. Hafiz Khan