KENNESAW STATE
UNIVERSITY

CS 4277
Attention

Dr. Chen Zhao

czhao4@kennesaw.edu

Computer Science

College of Computing and Software Engineering

Learning Objectives

- Encoder-Decoder
- Attention with RNNs
- General Attention Layers
  - Self-attention
  - Positional encoding
  - Masked attention
  - Multi-head attention
- Transformers

Encoder-Decoder

Rethink about CNN

- Encoder: encode inputs into intermediate presentation (features)
- Decoder: decode the presentation into outputs

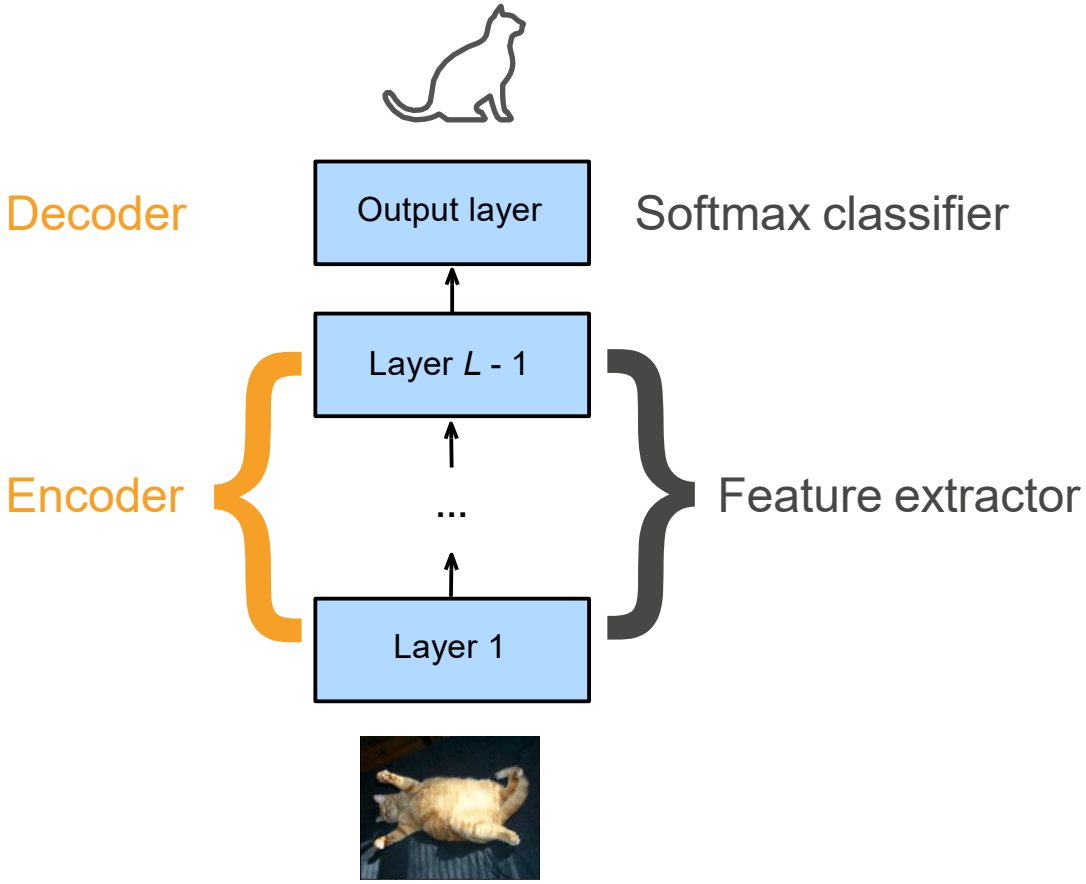

Rethink about RNN

- Encoder: present a piece of text as a vector
- Decoder: decode the presentation into outputs

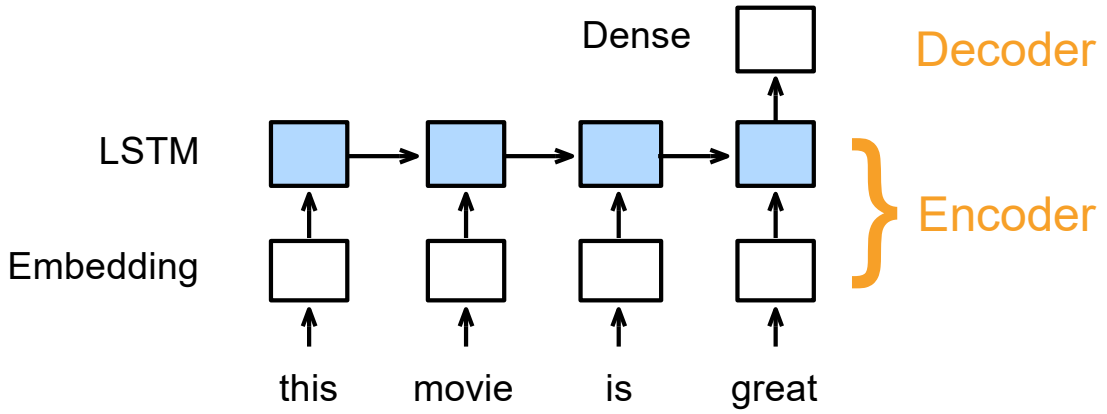

The Encoder-decoder Architecture

- A model is partitioned into two parts
  - The encoder process inputs
  - The decoder generates outputs

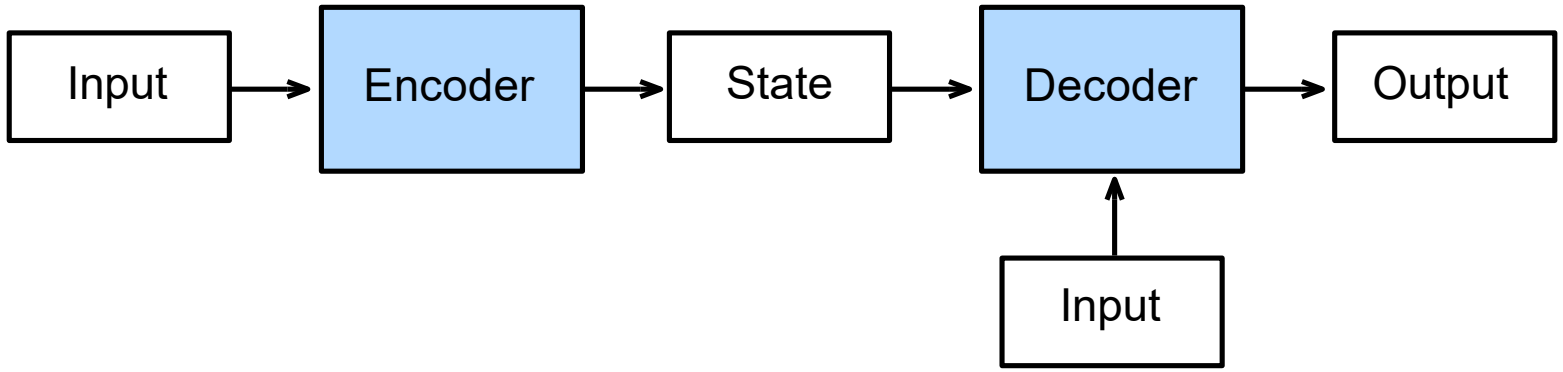

Machine Translation

- Given a sentence in a source language, translate into a target language
- These two sequences may have different lengths

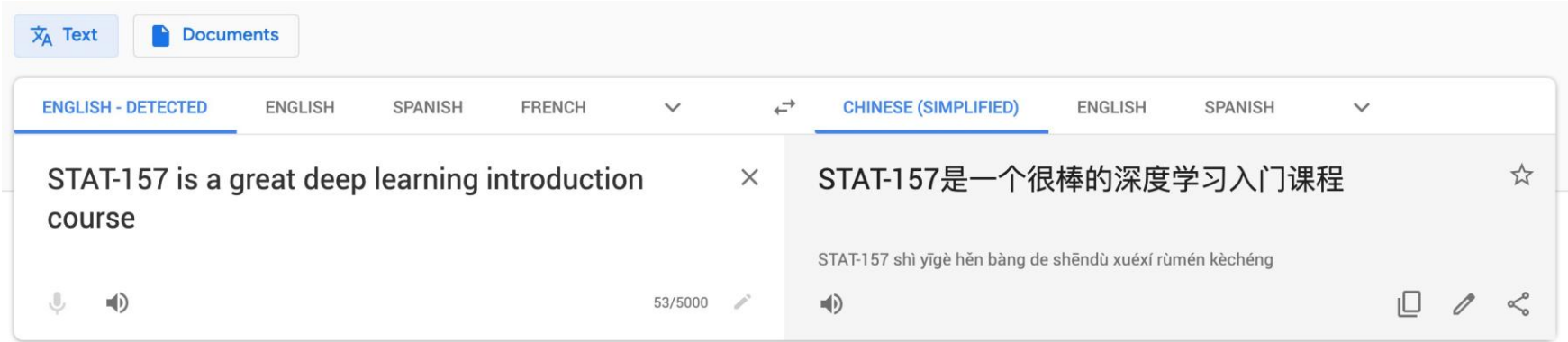

Seq2seq

- The encoder is a RNN to read input sequence
- The decoder uses another RNN to generate output

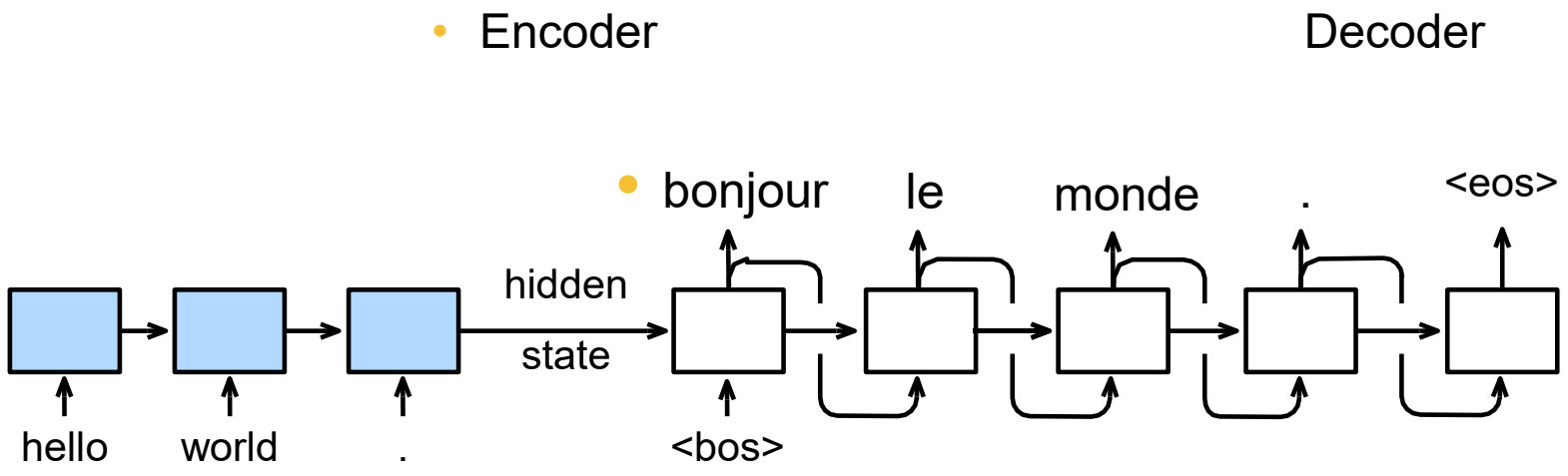

Encoder/Decoder Details

- The encoder is a standard RNN model without the output layer
- The encoder's hidden state in last time step is used as the decoder's initial hidden state

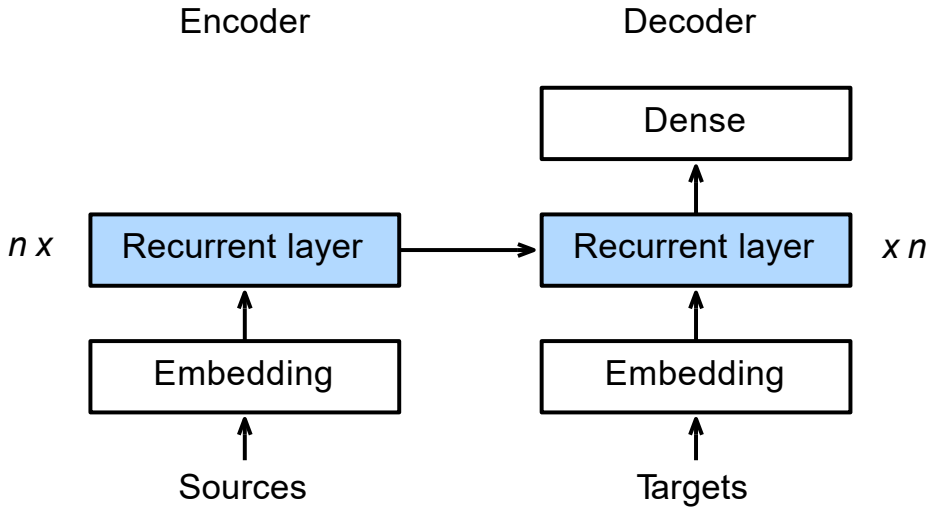

Training

- The decoder is feed with the targeted sentence during training
  - Encoder

Decoder

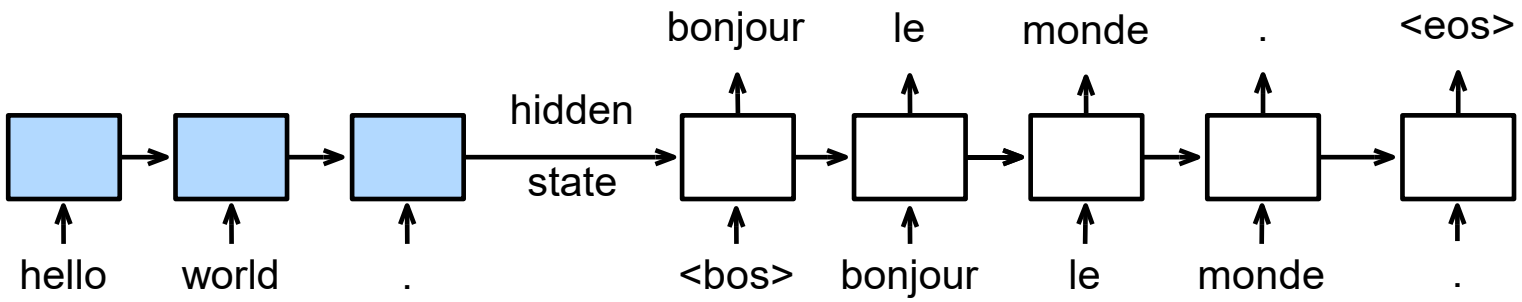

Predict:

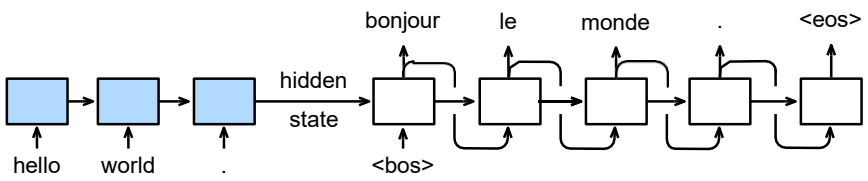

Encoder-Decoder

- **RNN:** input sequence is transformed into output sequence in a one-to-one fashion.
- **Goal:** Develop an architecture capable of generating contextually appropriate, arbitrary length, output sequences

- **Applications**:
  - Machine translation
  - Summarization
  - Question answering
  - Dialogue modeling

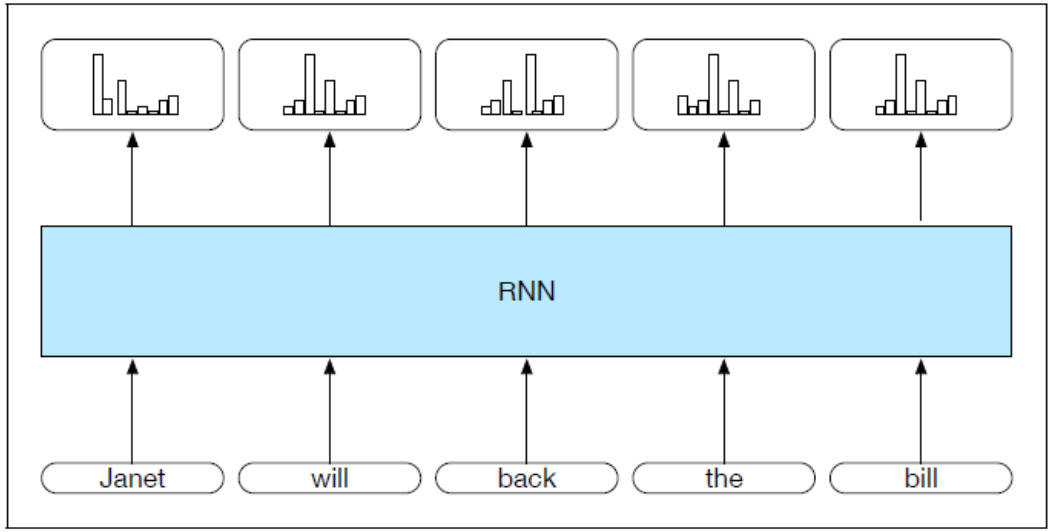

Simple recurrent neural network illustrated as a feed-forward network

- Most significant change: new set of weights, U
  - connect the hidden layer from the previous time step to the current hidden layer.
  - determine how the network should make use of past context in calculating the output for the current input.

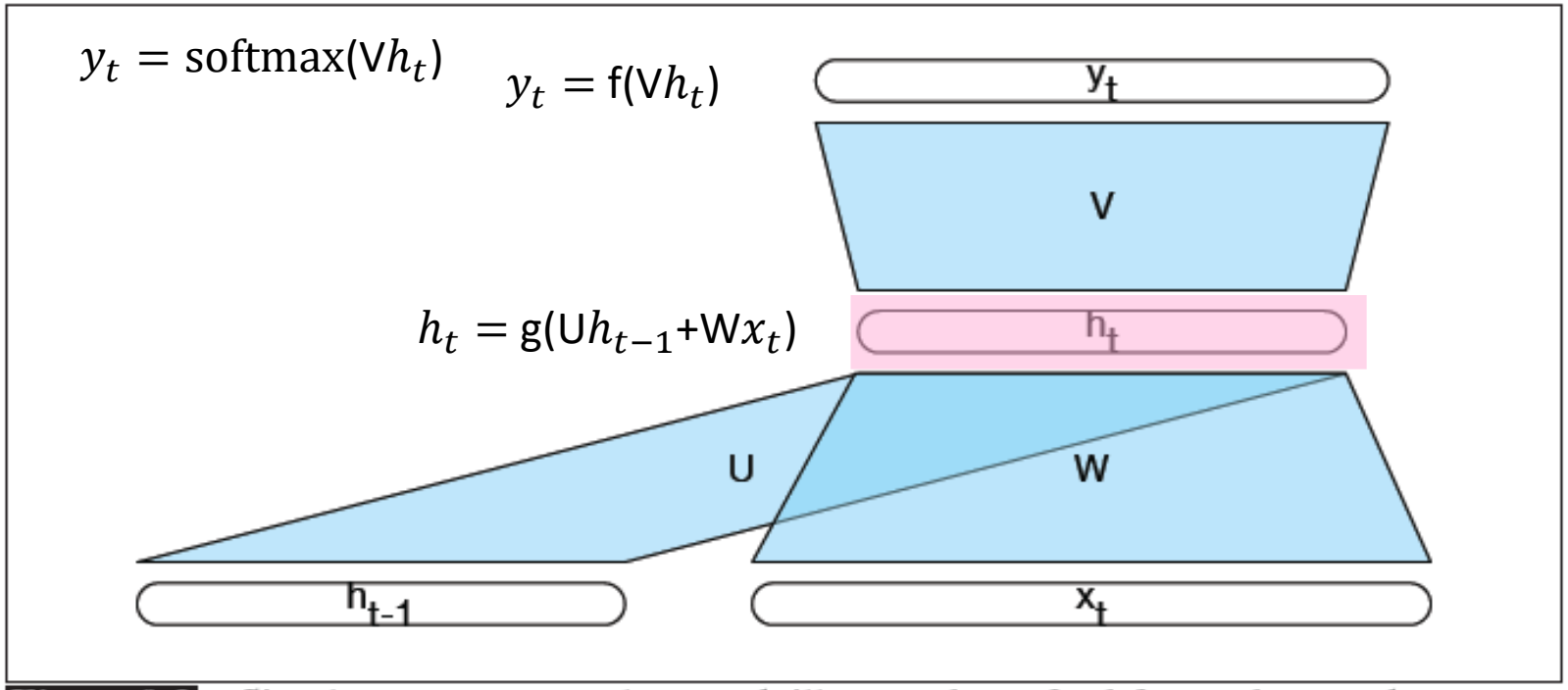

Figure 9.3 Simple recurrent neural network illustrated as a feed-forward network.

Simple-RNN abstraction

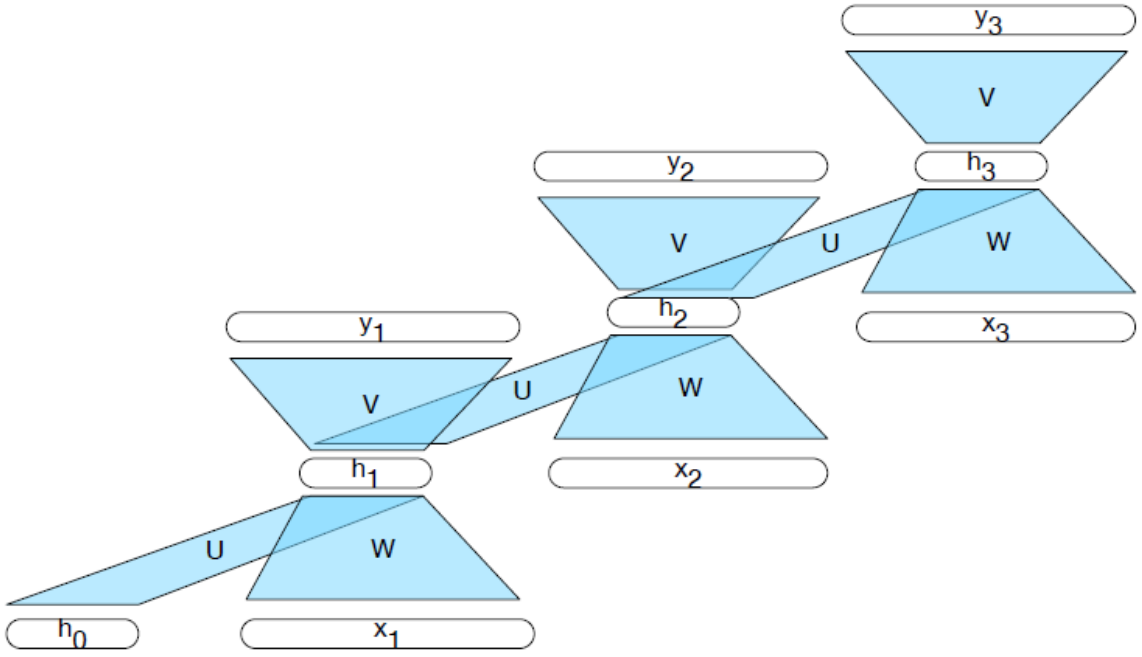

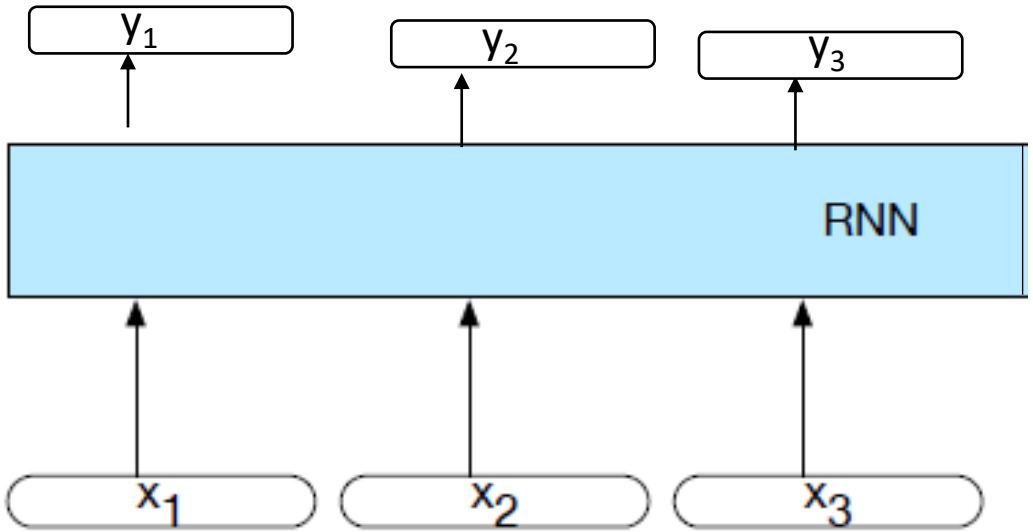

RNN Applications

- Language Modeling

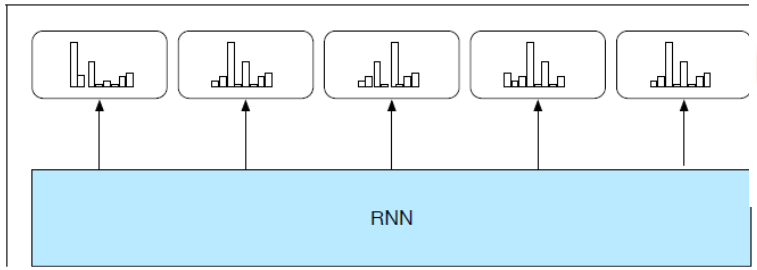

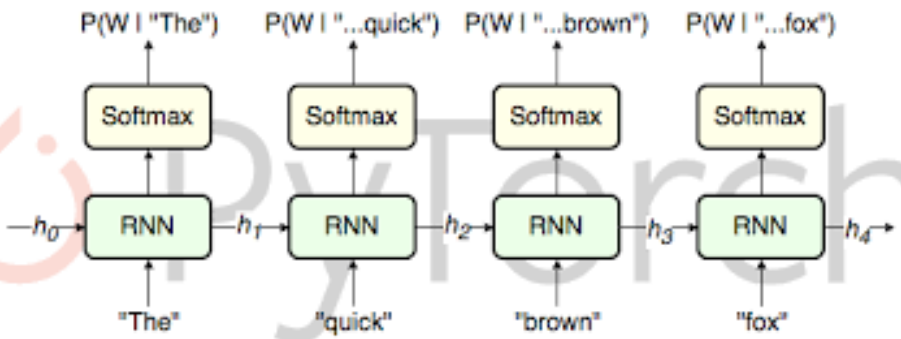

- Sequence Classification (Sentiment, Topic)

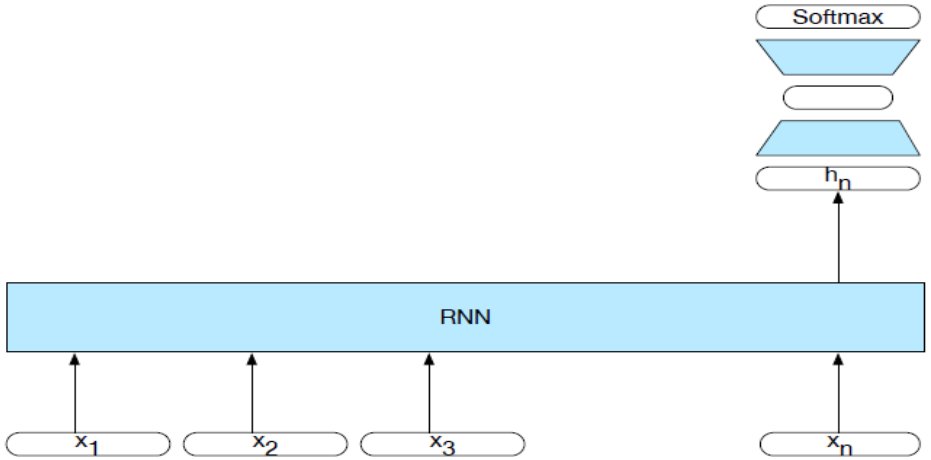

- Sequence to Sequence

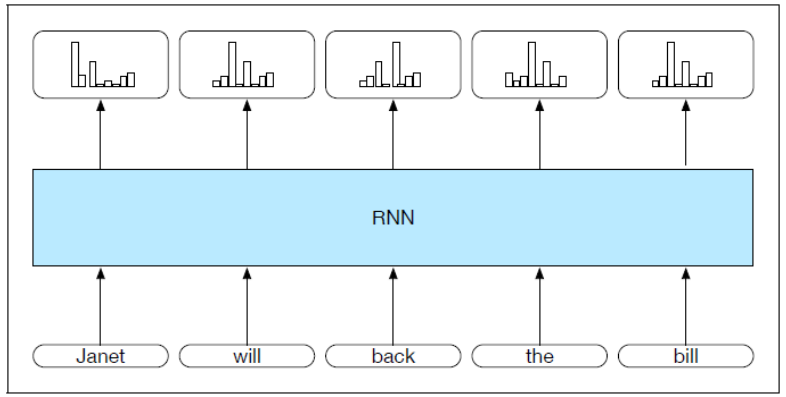

Sentence Completion using an RNN

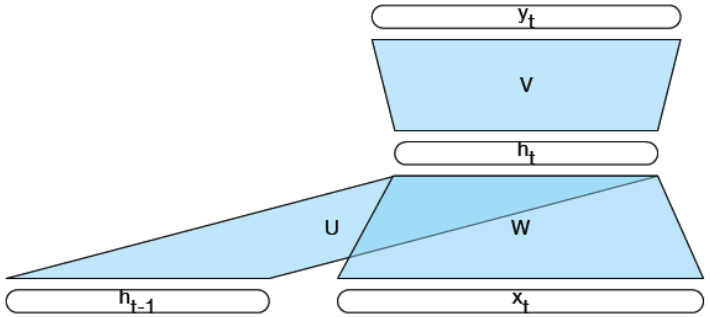

$$y_t = \text{softmax}(\text{V}h_t)$$

$$h_t = \text{g}(h_{t-1} + \text{W}x_t)$$

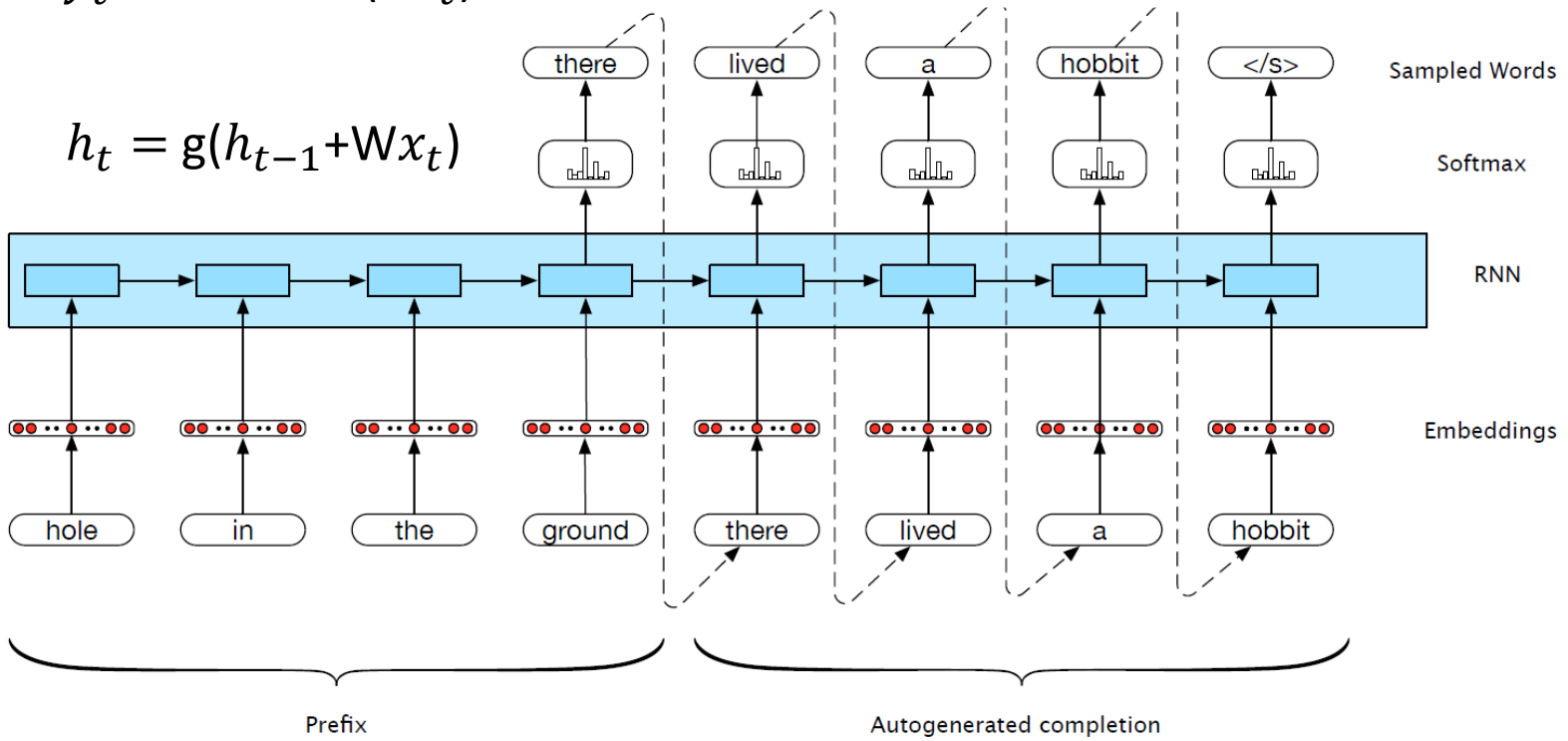

- Trained Neural Language Model can be used to generate novel sequences
- Or to complete a given sequence (until end of sentence token <\s> is generated)

Sentence Completion using an RNN

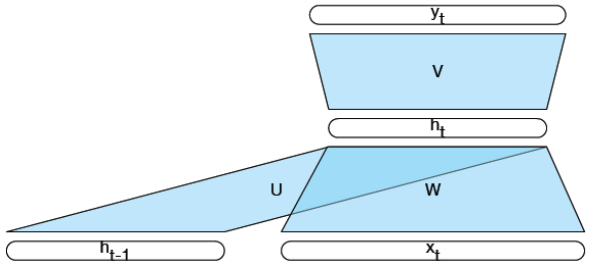

$$y_t = \text{softmax}(\text{V}h_t)$$

$$h_t = \text{g}(h_{t-1} + \text{W}x_t)$$

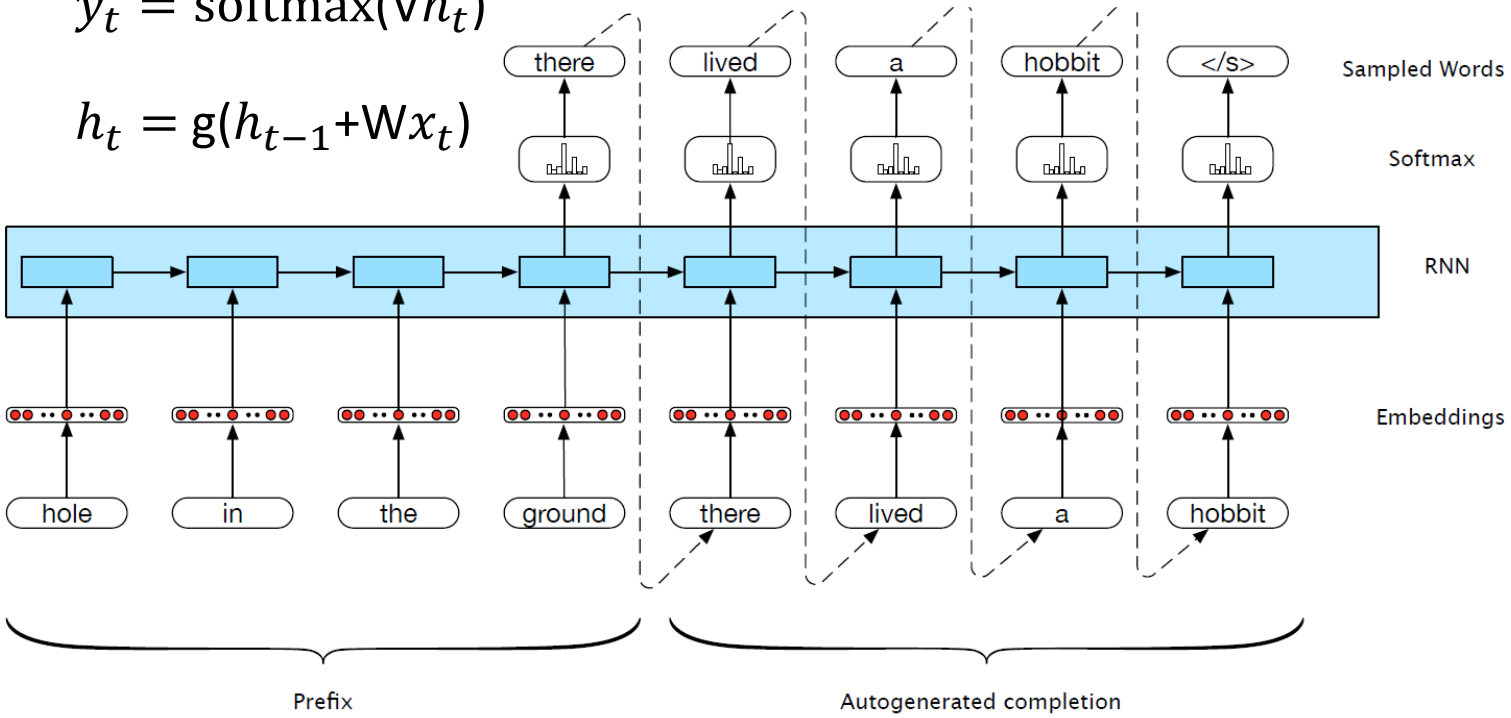

- **Trained Neural Language Model** can be used to generate novel sequences
- Or to **complete** a given sequence (until end of sentence token <\s> is generated)

Extending (autoregressive) generation to Machine Translation

word generated at each time step is conditioned on word from previous step.

- Training data are parallel text e.g., English / French

  there lived a hobbit *vivait un hobbit*

  ……..

- Build an RNN language model on the concatenation of source and target

  there lived a hobbit <\s> *vivait un hobbit* <\s>

  ……..

Extending (autoregressive) generation to Machine Translation

- Translation as Sentence Completion !

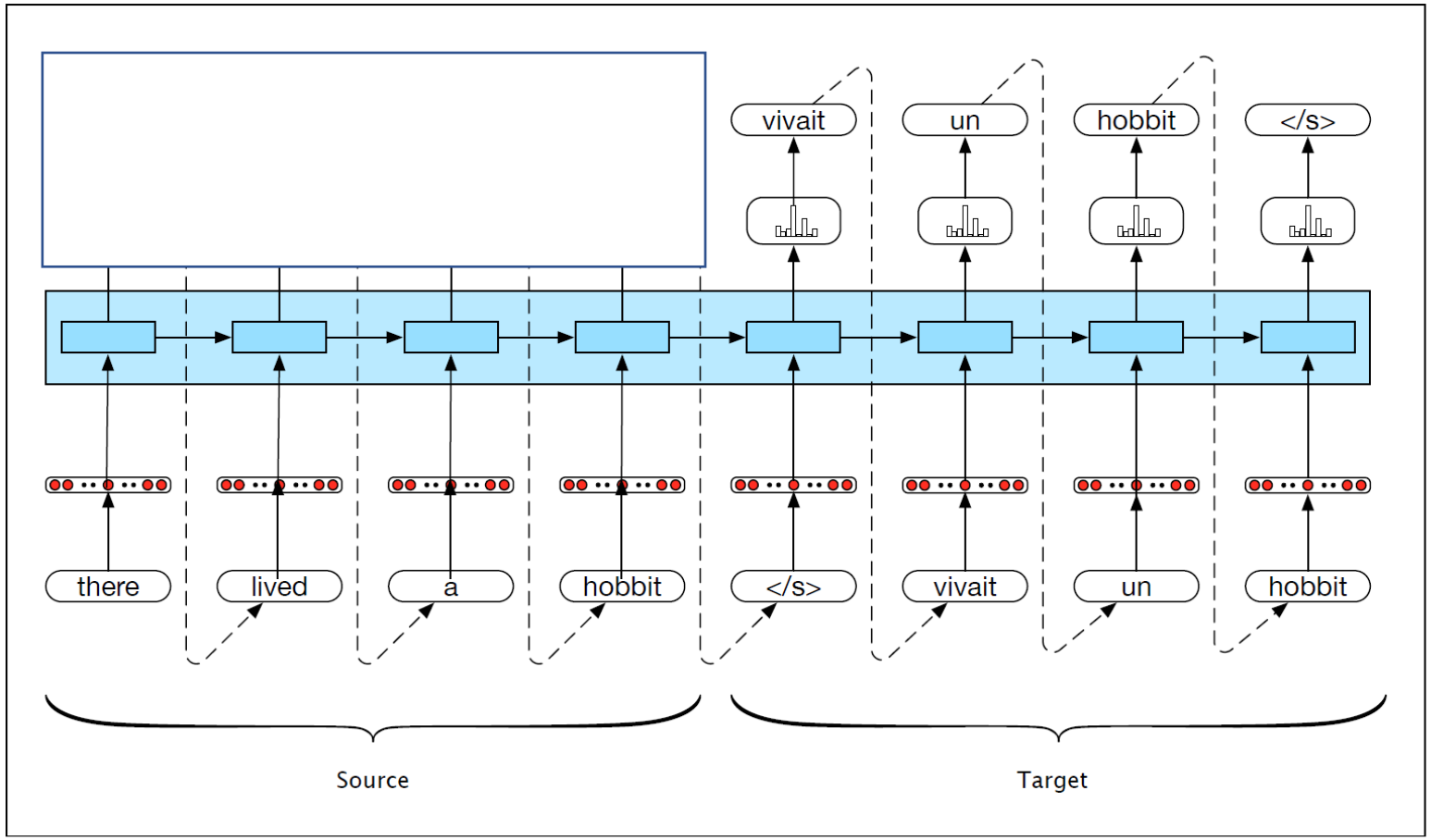

(simple) Encoder Decoder Networks

Limiting design choices

- E and D assumed to have the same internal structure (here RNNs)
- Final state of the E is the only context available to D
- this context is only available to D as its initial hidden state.

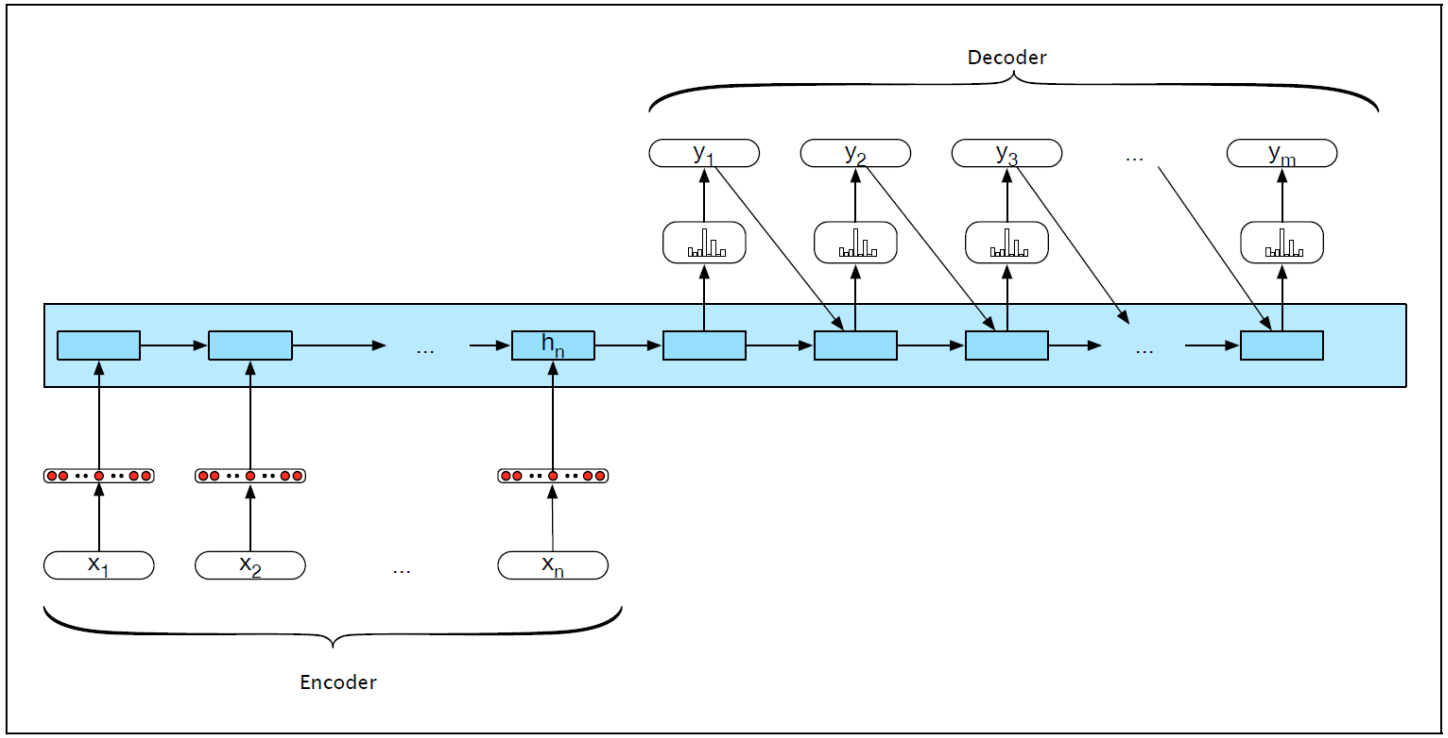

- Encoder generates a contextualized representation of the input (last state).
- Decoder takes that state and autoregressively generates a sequence of outputs

General Encoder Decoder Networks

- Abstracting away from these choices
  - Encoder: accepts an input sequence, $x_{1:n}$ and generates a corresponding sequence of contextualized representations, $h_{1:n}$
  - Context vector c: function of $h_{1:n}$ and conveys the essence of the input to the decoder.
  - Decoder: accepts c as input and generates an arbitrary length sequence of hidden states $h_{1:m}$ from which a corresponding sequence of output states $y_{1:m}$ can be obtained.

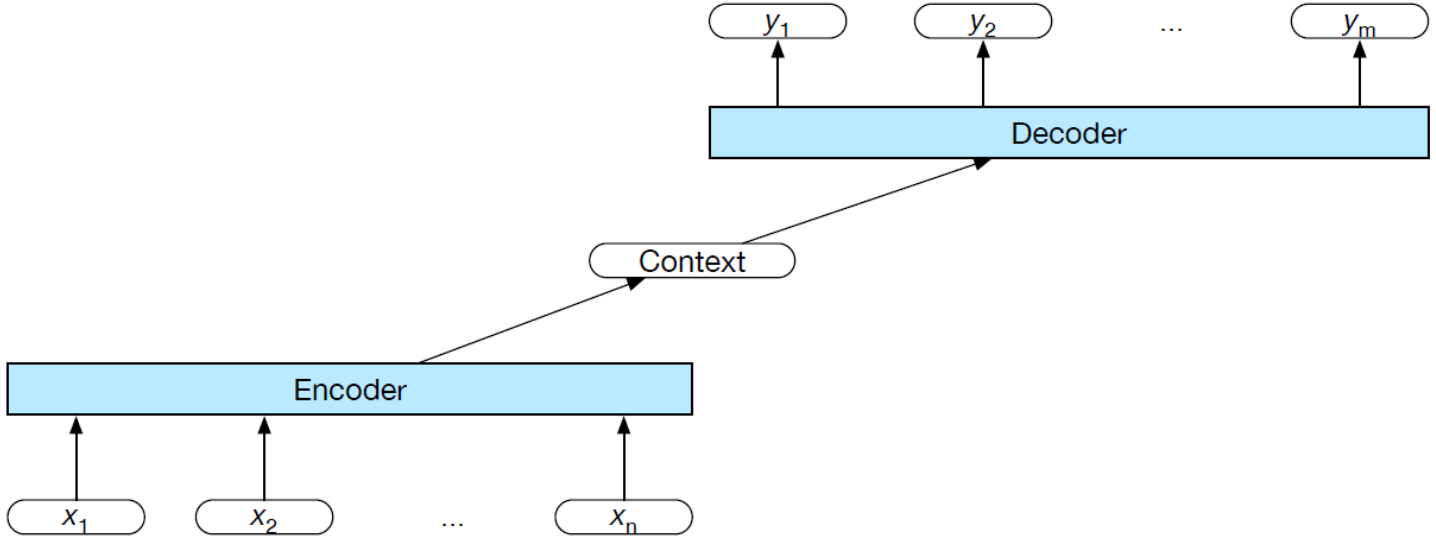

Popular architectural choices: Encoder

Widely used encoder design: **stacked Bi-LSTMs**

- Contextualized representations for each time step: **hidden states from top layers** from the forward and backward passes

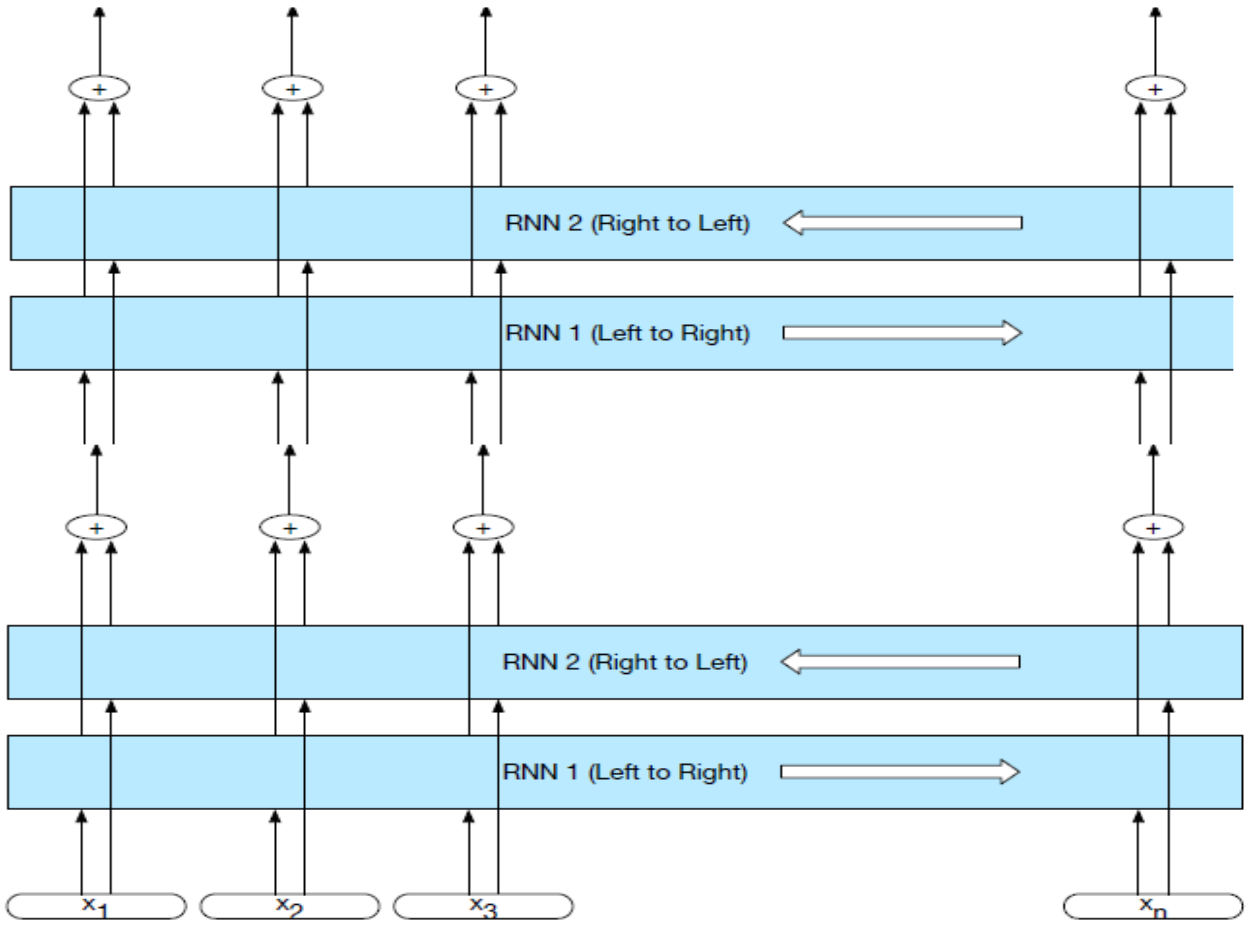

Decoder Basic Design

- produce an output sequence an element at a time

$$c = h_n^e$$
$$h_0^d = c$$

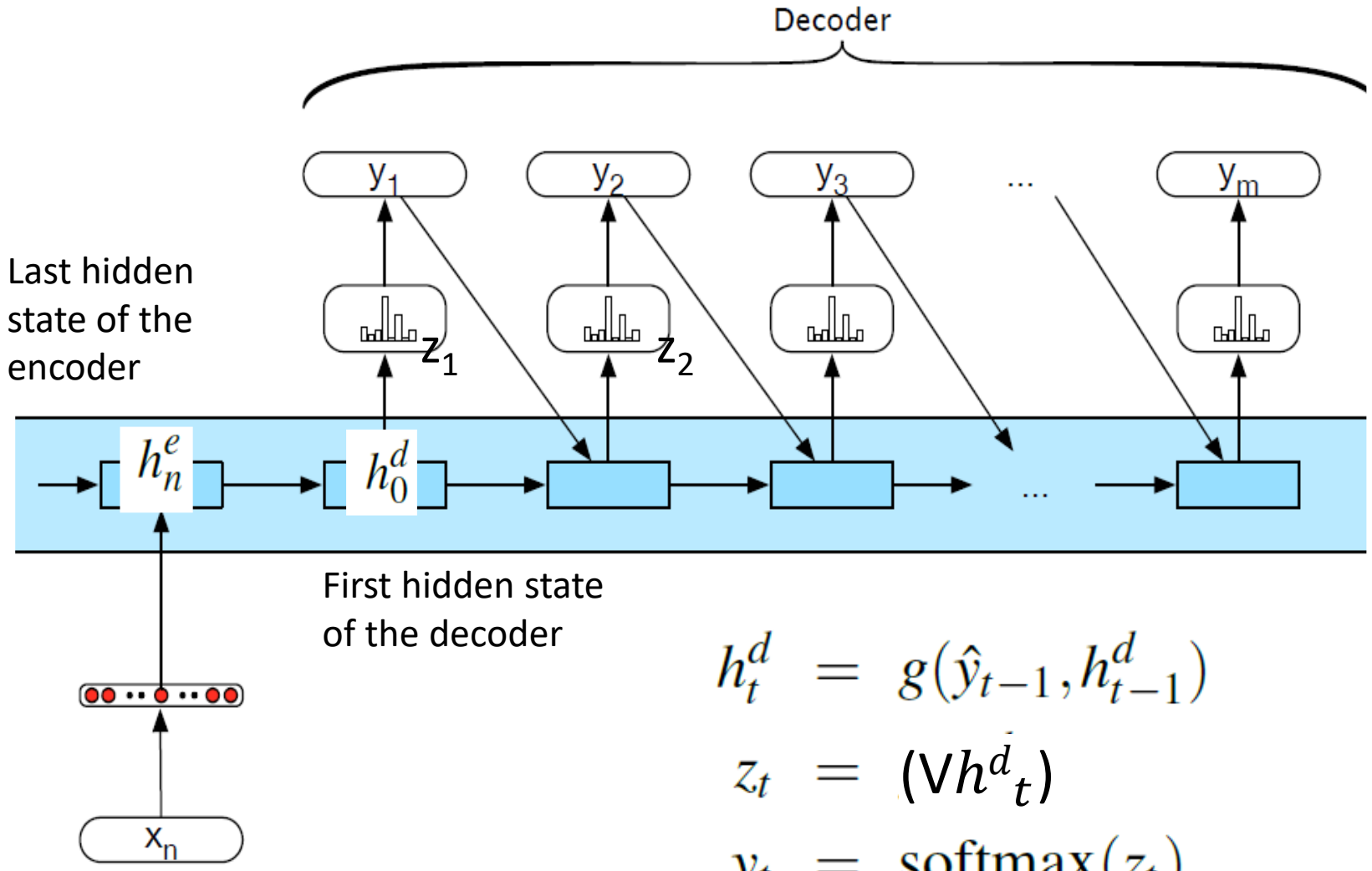

$$h_t^d = g(\hat{y}_{t-1}, h_{t-1}^d)$$
$$z_t = (Vh^d{}_t)$$
$$y_t = \text{softmax}(z_t)$$

Decoder Design Enhancement

Context available at each step of decoding

$$c = h_n^e$$
$$h_0^d = c$$

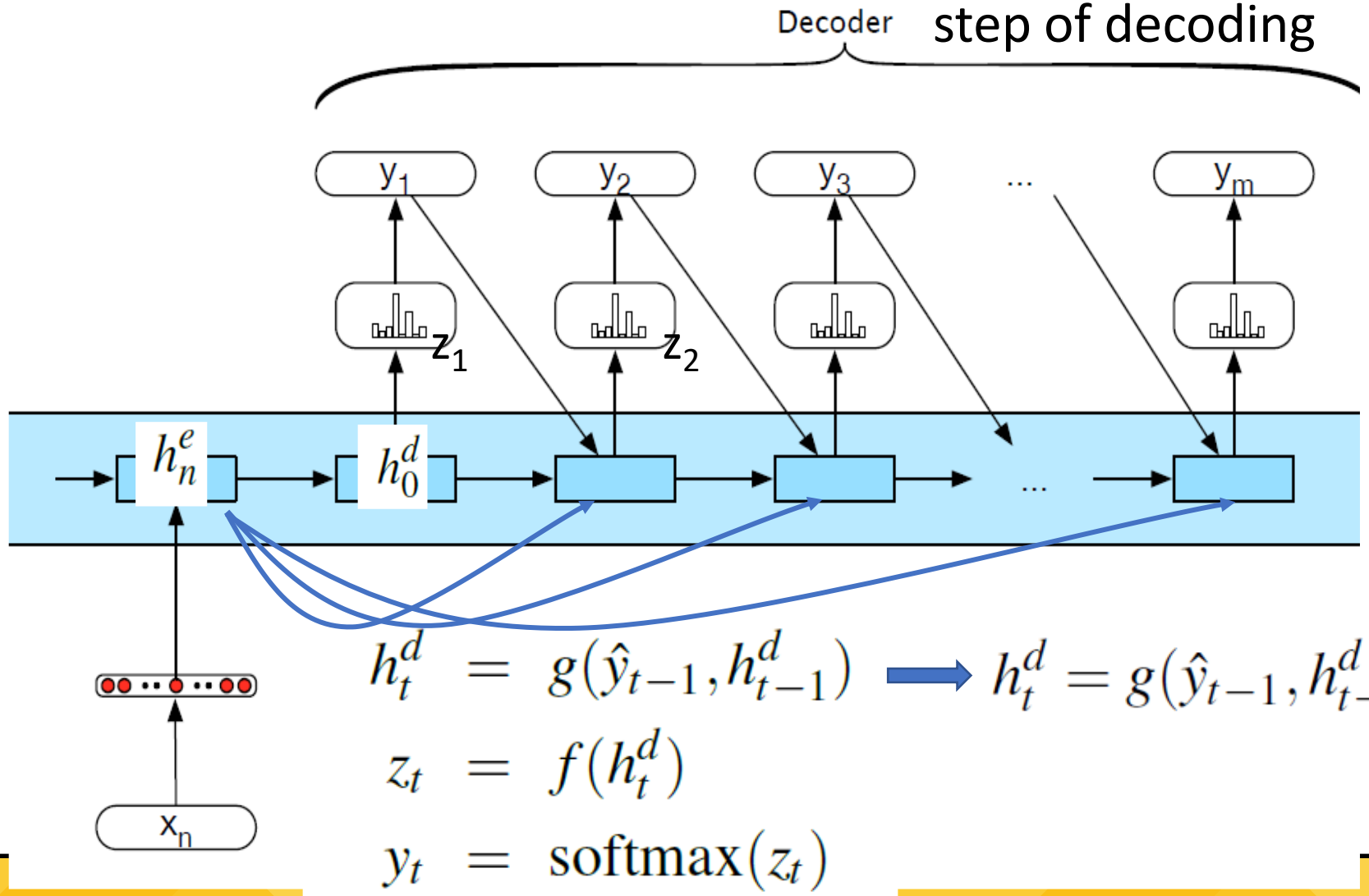

$$h_t^d = g(\hat{y}_{t-1}, h_{t-1}^d) \Rightarrow h_t^d = g(\hat{y}_{t-1}, h_{t-1}^d, c)$$
$$z_t = f(h_t^d)$$
$$y_t = \text{softmax}(z_t)$$

Attention

Last Time: Recurrent Neural Networks

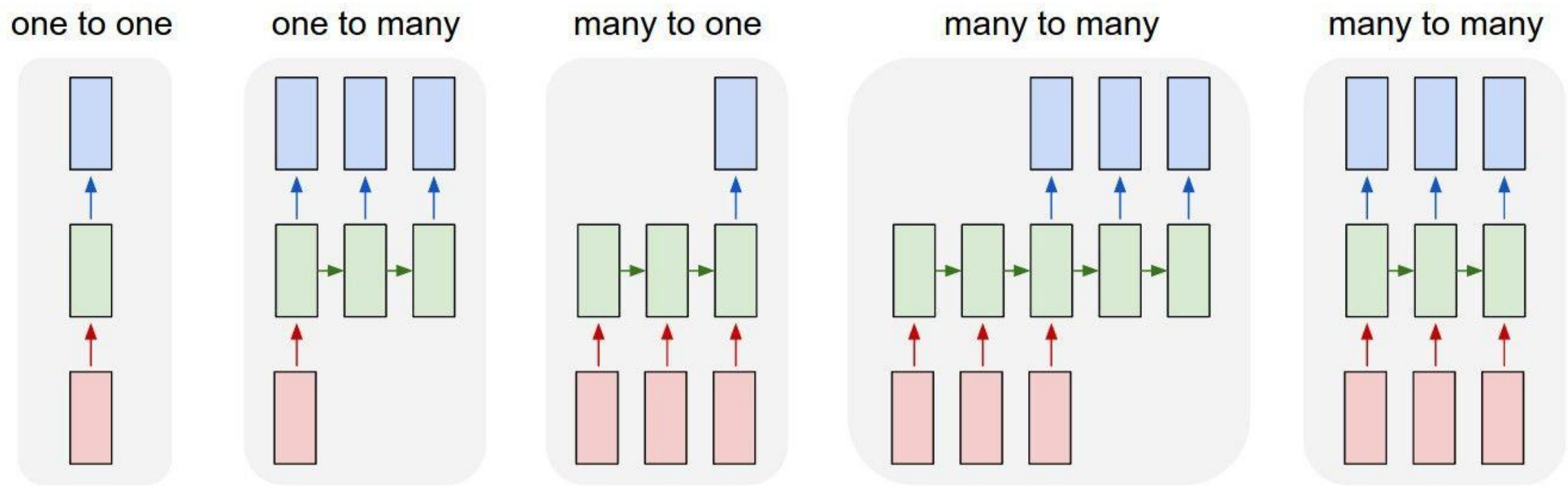

Last Time: Variable length computation graph with shared weights

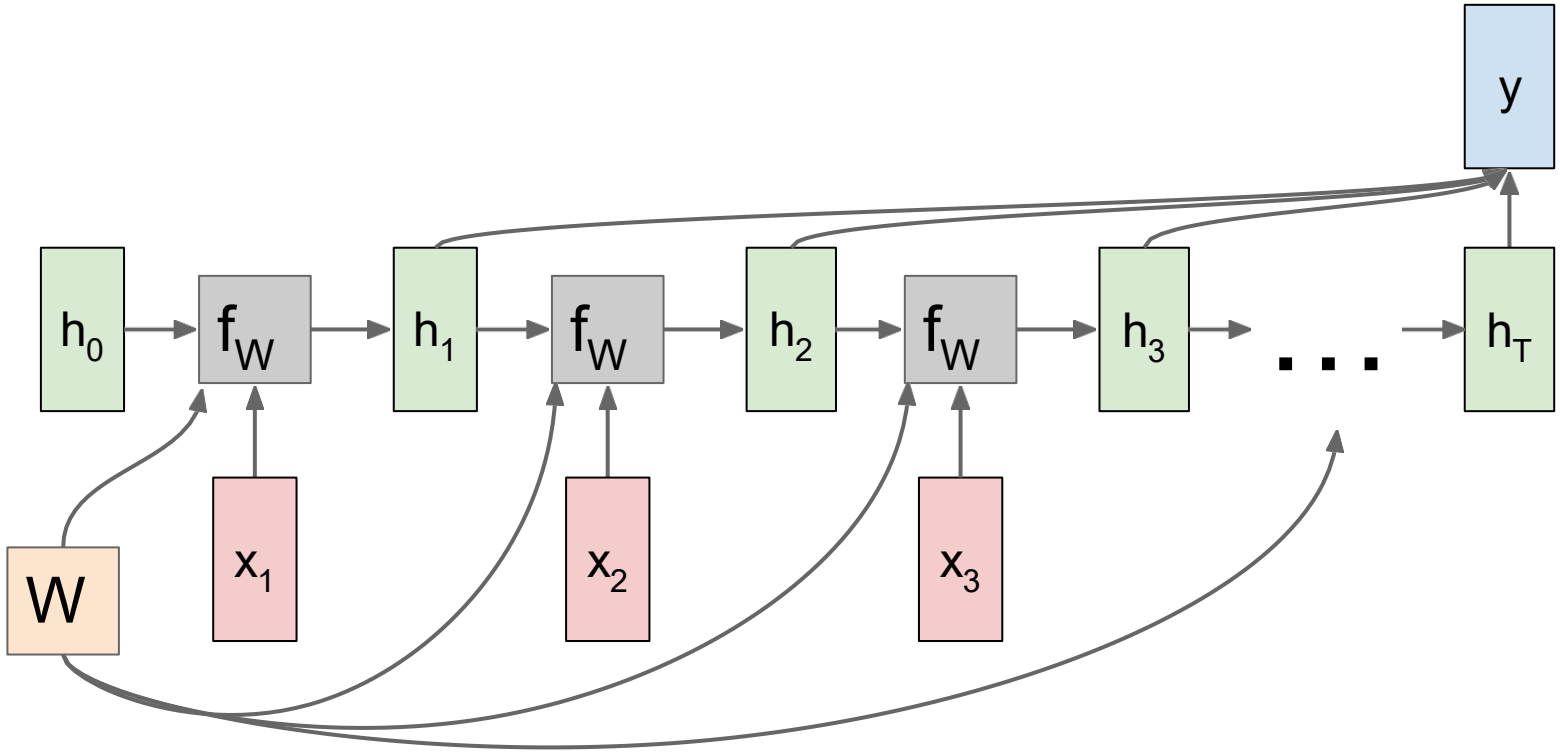

Image Captioning using spatial features

Input: Image **I**
Output: Sequence **y** = $y_1, y_2, \ldots, y_T$

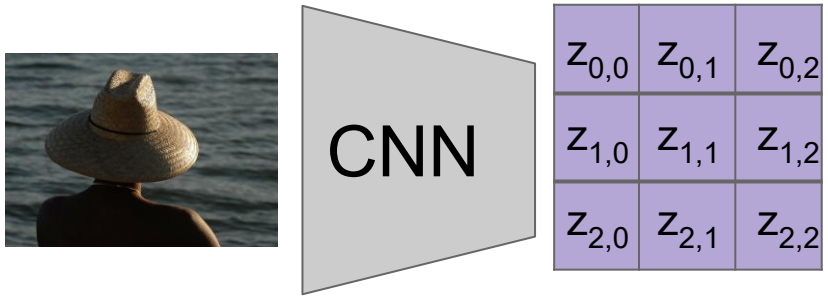

Extract spatial features from a pretrained CNN

Features: H x W x D

Xu et al, “Show, Attend and Tell: Neural Image Caption Generation with Visual Attention”, ICML 2015

Image Captioning using spatial features

Input: Image **I**
Output: Sequence **y** = $y_1, y_2, \ldots, y_T$

Encoder: $h_0 = f_{\mathbf{W}}(\mathbf{z})$
where **z** is spatial CNN features
$f_{\mathbf{W}}(.)$ is an MLP

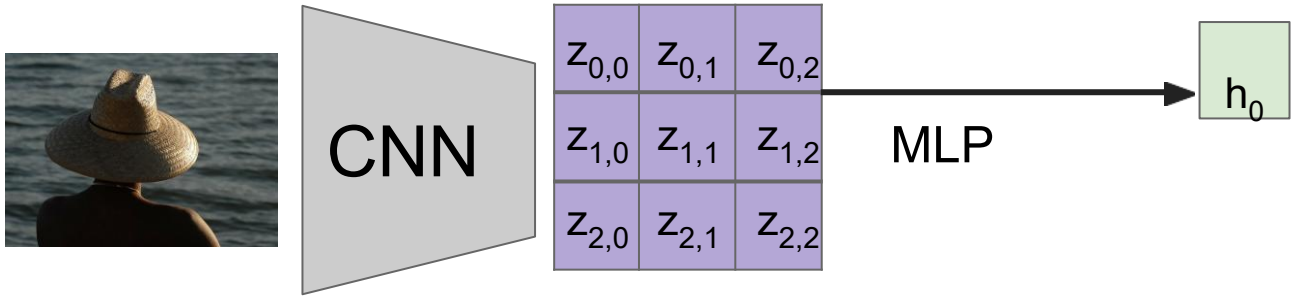

Extract spatial features from a pretrained CNN

Features: H x W x D

Xu et al, “Show, Attend and Tell: Neural Image Caption Generation with Visual Attention”, ICML 2015

Image Captioning using spatial features

Input: Image **I**
Output: Sequence $\mathbf{y} = y_1, y_2, \ldots, y_T$

Decoder: $y_t = g_{\mathbf{V}}(y_{t-1}, h_{t-1}, c)$
where context vector c is often $c = h_0$

Encoder: $h_0 = f_{\mathbf{W}}(\mathbf{z})$
where **z** is spatial CNN features
$f_{\mathbf{W}}(.)$ is an MLP

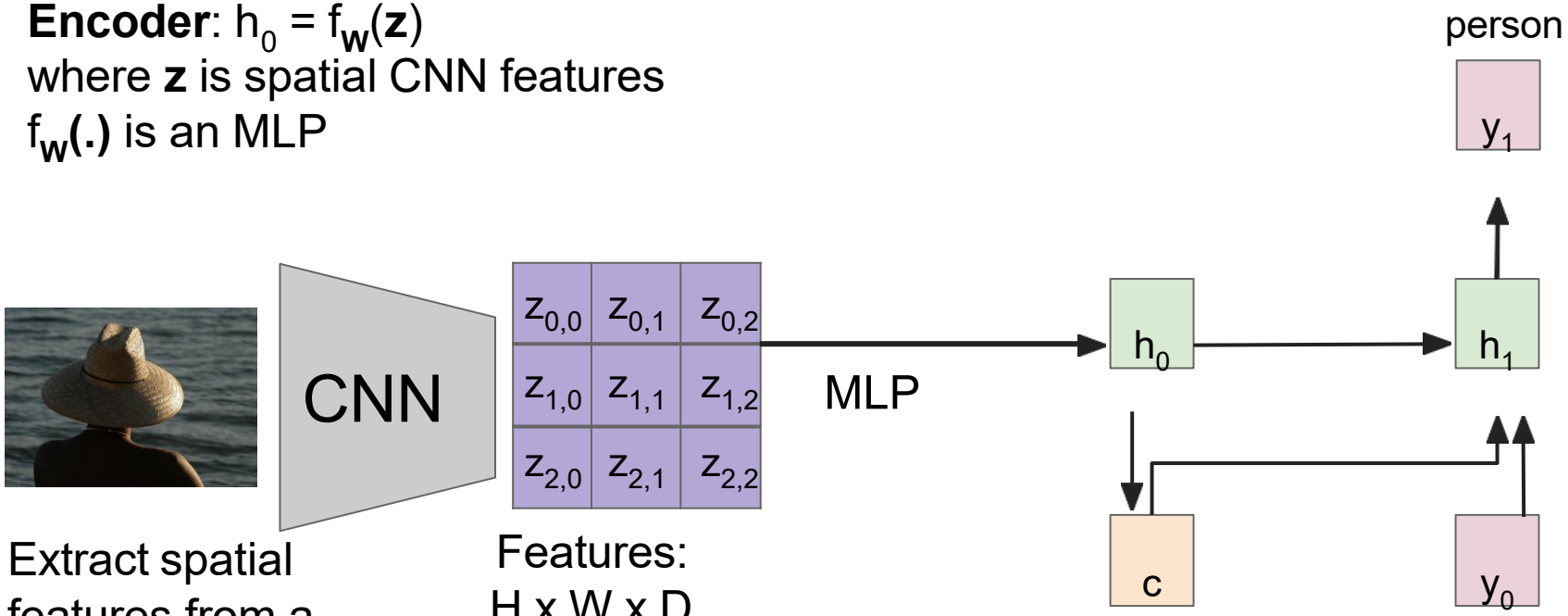

Extract spatial features from a pretrained CNN

Features: H x W x D

Xu et al, “Show, Attend and Tell: Neural Image Caption Generation with Visual Attention”, ICML 2015

Image Captioning using spatial features

Input: Image **I**
Output: Sequence **y** = $y_1, y_2, \ldots, y_T$

Decoder: $y_t = g_{\mathbf{V}}(y_{t-1}, h_{t-1}, c)$
where context vector c is often $c = h_0$

Encoder: $h_0 = f_{\mathbf{W}}(\mathbf{z})$
where **z** is spatial CNN features
$f_{\mathbf{W}}(.)$ is an MLP

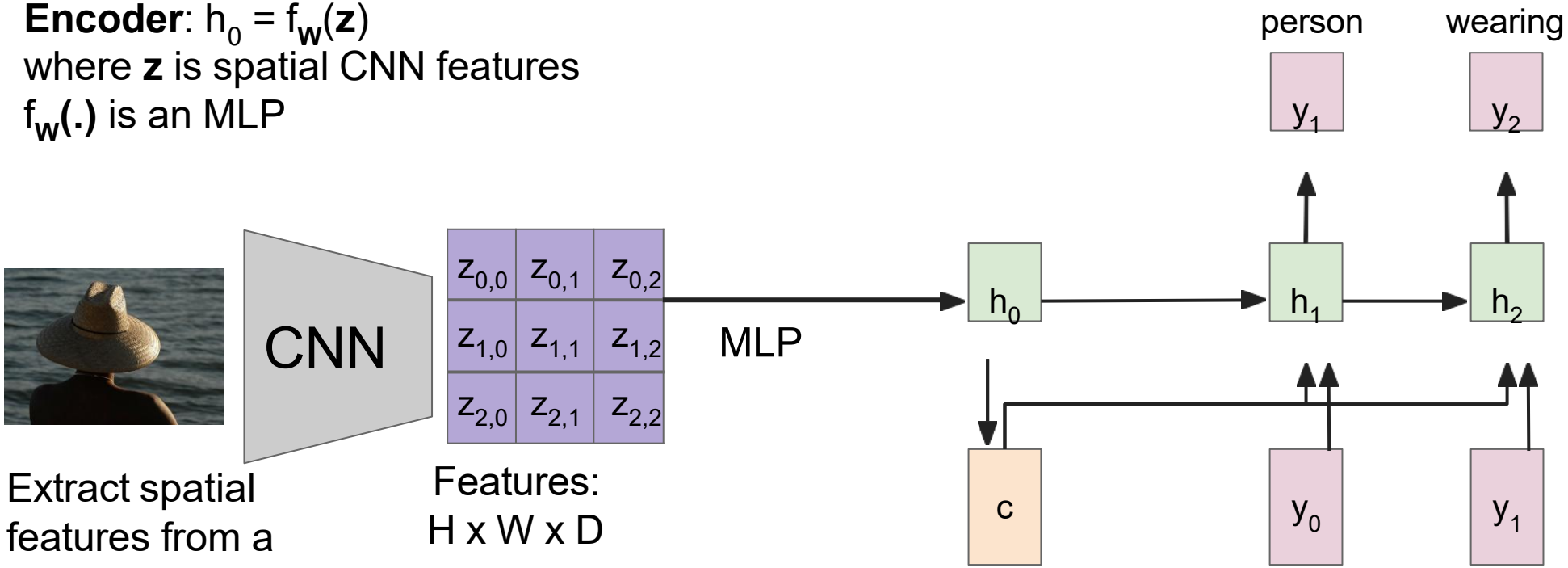

Extract spatial features from a pretrained CNN

Features: H x W x D

Xu et al, “Show, Attend and Tell: Neural Image Caption Generation with Visual Attention”, ICML 2015

Image Captioning using spatial features

Input: Image **I**
Output: Sequence $\mathbf{y} = y_1, y_2, \ldots, y_T$

Decoder: $y_t = g_{\mathbf{V}}(y_{t-1}, h_{t-1}, c)$
where context vector c is often $c = h_0$

Encoder: $h_0 = f_{\mathbf{W}}(\mathbf{z})$
where **z** is spatial CNN features
$f_{\mathbf{W}}(.)$ is an MLP

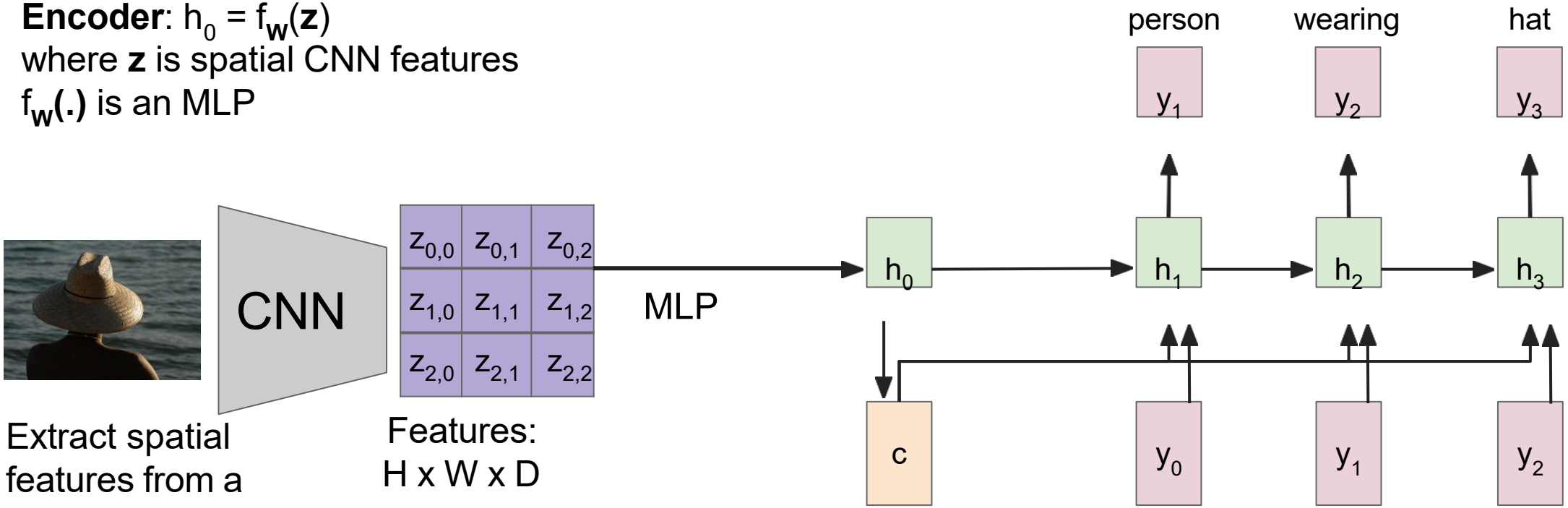

Extract spatial features from a pretrained CNN

Features: H x W x D

Xu et al, “Show, Attend and Tell: Neural Image Caption Generation with Visual Attention”, ICML 2015

Image Captioning using spatial features

Input: Image **I**
Output: Sequence **y** = $y_1, y_2, \ldots, y_T$

Decoder: $y_t = g_{\mathbf{V}}(y_{t-1}, h_{t-1}, c)$
where context vector c is often $c = h_0$

Encoder: $h_0 = f_{\mathbf{W}}(\mathbf{z})$
where **z** is spatial CNN features
$f_{\mathbf{W}}(.)$ is an MLP

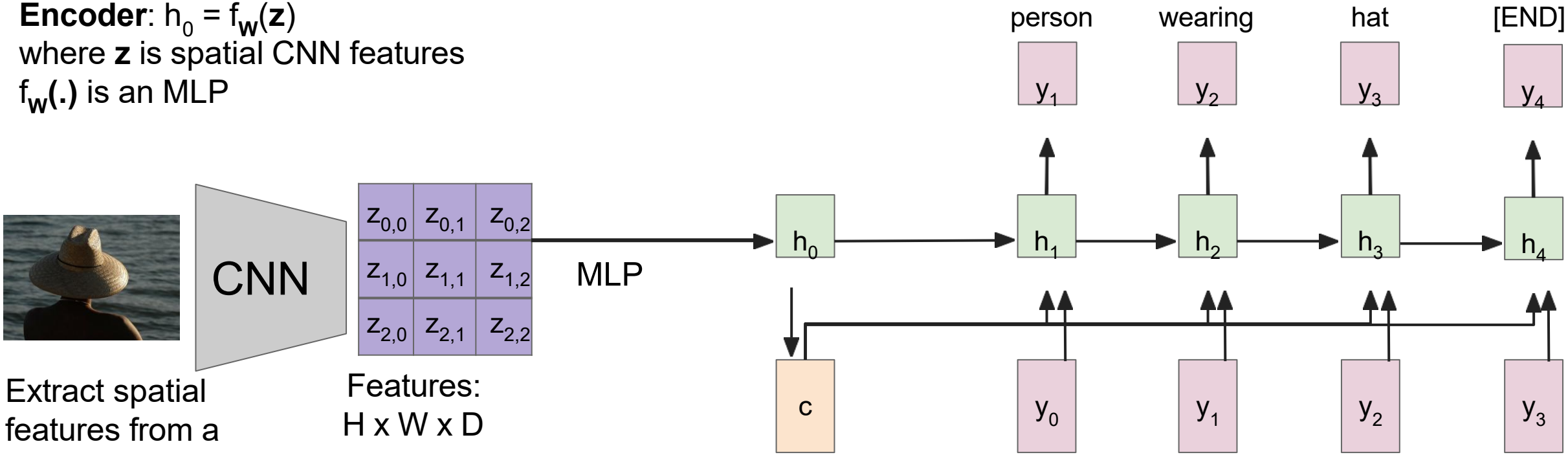

Extract spatial features from a pretrained CNN

Features: H x W x D

Xu et al, “Show, Attend and Tell: Neural Image Caption Generation with Visual Attention”, ICML 2015

Image Captioning using spatial features

Problem: Input is "bottlenecked" through c

- Model needs to encode everything it wants to say within c

This is a problem if we want to generate really long descriptions? 100s of words long

CNN

$z_{0,0}$ $z_{0,1}$ $z_{0,2}$
$z_{1,0}$ $z_{1,1}$ $z_{1,2}$
$z_{2,0}$ $z_{2,1}$ $z_{2,2}$

MLP

h_0 h_1 h_2 h_3 h_4

c

y_0 y_1 y_2 y_3

y_1 y_2 y_3 y_4

person wearing hat [END]

Extract spatial features from a pretrained CNN

Features: H x W x D

Xu et al, “Show, Attend and Tell: Neural Image Caption Generation with Visual Attention”, ICML 2015

Image Captioning with RNNs & Attention

gif source

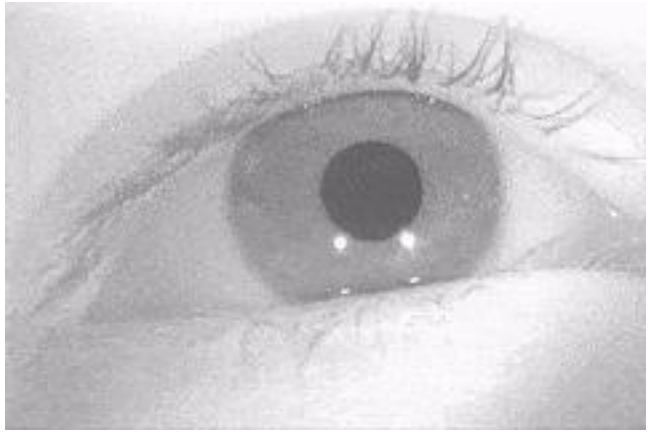

Attention Saccades in humans

Attention idea: New context vector at every time step.

Each context vector will attend to different image regions

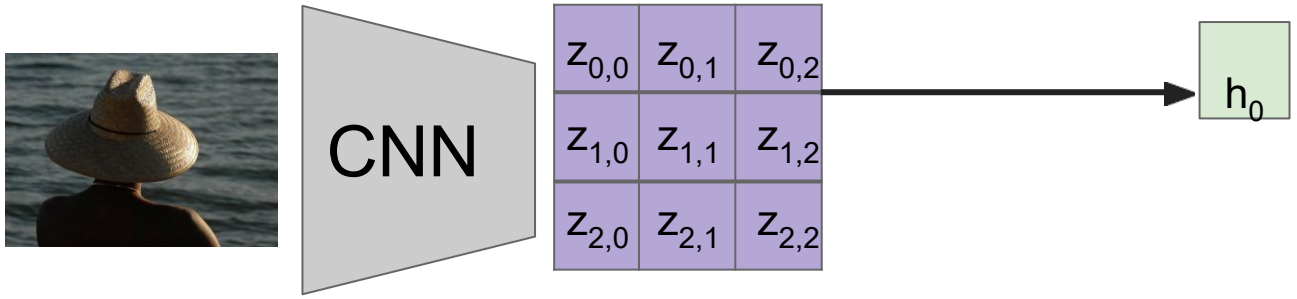

Extract spatial features from a pretrained CNN

Features: H x W x D

Xu et al, “Show, Attend and Tell: Neural Image Caption Generation with Visual Attention”, ICML 2015

Image Captioning with RNNs & Attention

Compute alignments scores (scalars):

$$e_{t,i,j} = f_{att}(h_{t-1}, z_{i,j})$$

$f_{att}(.)$ is an MLP

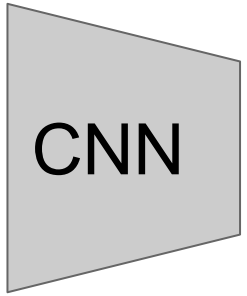

Extract spatial features from a pretrained CNN

Features:
H x W x D

$z_{0,0}$	$z_{0,1}$	$z_{0,2}$
$z_{1,0}$	$z_{1,1}$	$z_{1,2}$
$z_{2,0}$	$z_{2,1}$	$z_{2,2}$

h_0

Alignment scores:
H x W

$e_{1,0,0}$	$e_{1,0,1}$	$e_{1,0,2}$
$e_{1,1,0}$	$e_{1,1,1}$	$e_{1,1,2}$
$e_{1,2,0}$	$e_{1,2,1}$	$e_{1,2,2}$

Xu et al, “Show, Attend and Tell: Neural Image Caption Generation with Visual Attention”, ICML 2015

Image Captioning with RNNs & Attention

Compute alignments scores (scalars):

$$e_{t,i,j} = f_{att}(h_{t-1}, z_{i,j})$$

$f_{att}(.)$ is an MLP

Alignment scores:
H x W

$e_{1,0,0}$	$e_{1,0,1}$	$e_{1,0,2}$
$e_{1,1,0}$	$e_{1,1,1}$	$e_{1,1,2}$
$e_{1,2,0}$	$e_{1,2,1}$	$e_{1,2,2}$

Attention:
H x W

$a_{1,0,0}$	$a_{1,0,1}$	$a_{1,0,2}$
$a_{1,1,0}$	$a_{1,1,1}$	$a_{1,1,2}$
$a_{1,2,0}$	$a_{1,2,1}$	$a_{1,2,2}$

Normalize to get attention weights:

$$a_{t,:,:} = softmax(e_{t,:,:})$$

$0 < a_{t,i,j} < 1$, attention values sum to 1

CNN

$z_{0,0}$	$z_{0,1}$	$z_{0,2}$
$z_{1,0}$	$z_{1,1}$	$z_{1,2}$
$z_{2,0}$	$z_{2,1}$	$z_{2,2}$

h_0

Extract spatial features from a pretrained CNN

Features:
H x W x D

Xu et al, “Show, Attend and Tell: Neural Image Caption Generation with Visual Attention”, ICML 2015

Image Captioning with RNNs & Attention

Compute alignments scores (scalars):

$$e_{t,i,j} = f_{att}(h_{t-1}, z_{i,j})$$

$f_{att}(.)$ is an MLP

Alignment scores: H x W

Attention: H x W

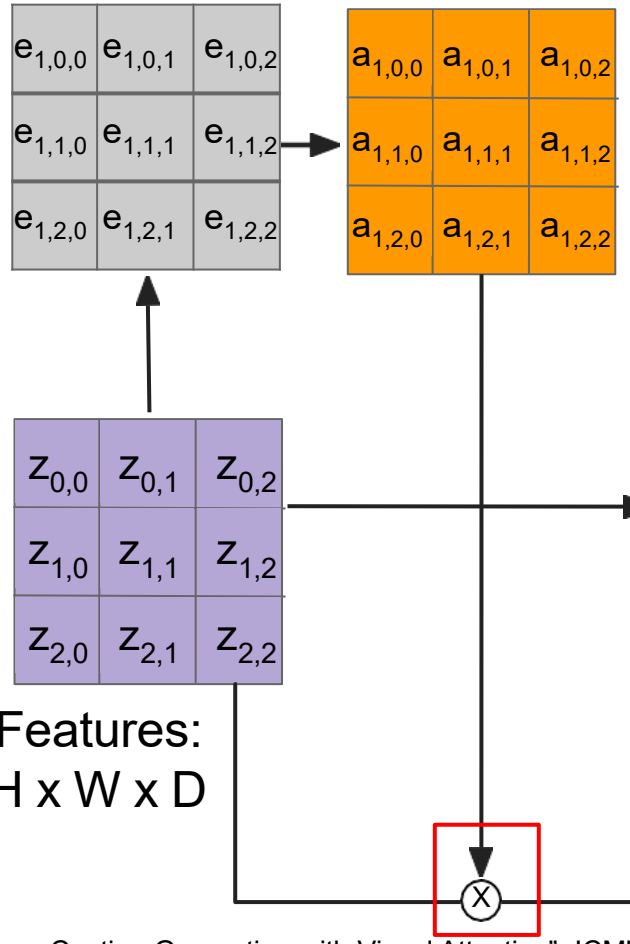

Normalize to get attention weights:

$$a_{t,:,:} = softmax(e_{t,:,:})$$

$0 < a_{t,i,j} < 1$,
attention values sum to 1

Compute context vector:

$$\boxed{c_t = \sum_{i,j} a_{t,i,j} z_{t,i,j}}$$

Extract spatial features from a pretrained CNN

Features: H x W x D

Xu et al, “Show, Attend and Tell: Neural Image Caption Generation with Visual Attention”, ICML 2015

Image Captioning with RNNs & Attention

Each timestep of decoder uses a different context vector that looks at different parts of the input image

Decoder: $y_t = g_V(y_{t-1}, h_{t-1}, c_t)$
New context vector at every time step

$$e_{t,i,j} = f_{att}(h_{t-1}, z_{i,j})$$
$$a_{t,:,:} = softmax(e_{t,:,:})$$
$$c_t = \sum_{i,j} a_{t,i,j} z_{t,i,j}$$

Extract spatial features from a pretrained CNN

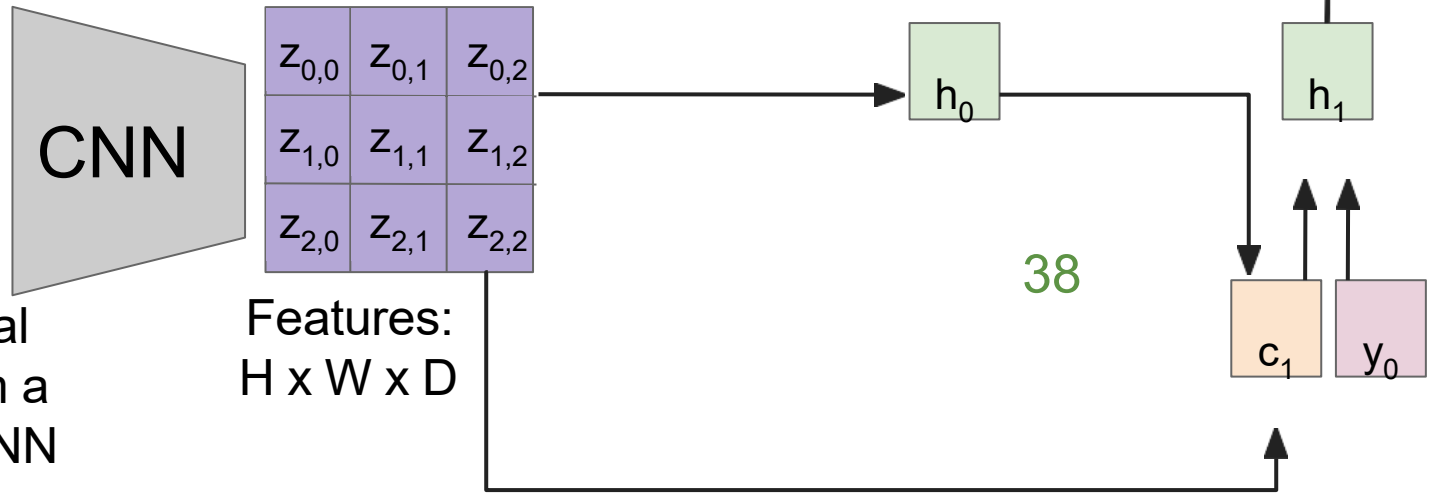

Features: H x W x D

Xu et al, “Show, Attend and Tell: Neural Image Caption Generation with Visual Attention”, ICML 2015

Image Captioning with RNNs & Attention

Decoder: $y_t = g_V(y_{t-1}, h_{t-1}, c_t)$
New context vector at every time step

$$e_{t,i,j} = f_{att}(h_{t-1}, z_{i,j})$$
$$a_{t,:,:} = softmax(e_{t,:,:})$$
$$c_t = \sum_{i,j} a_{t,i,j} z_{t,i,j}$$

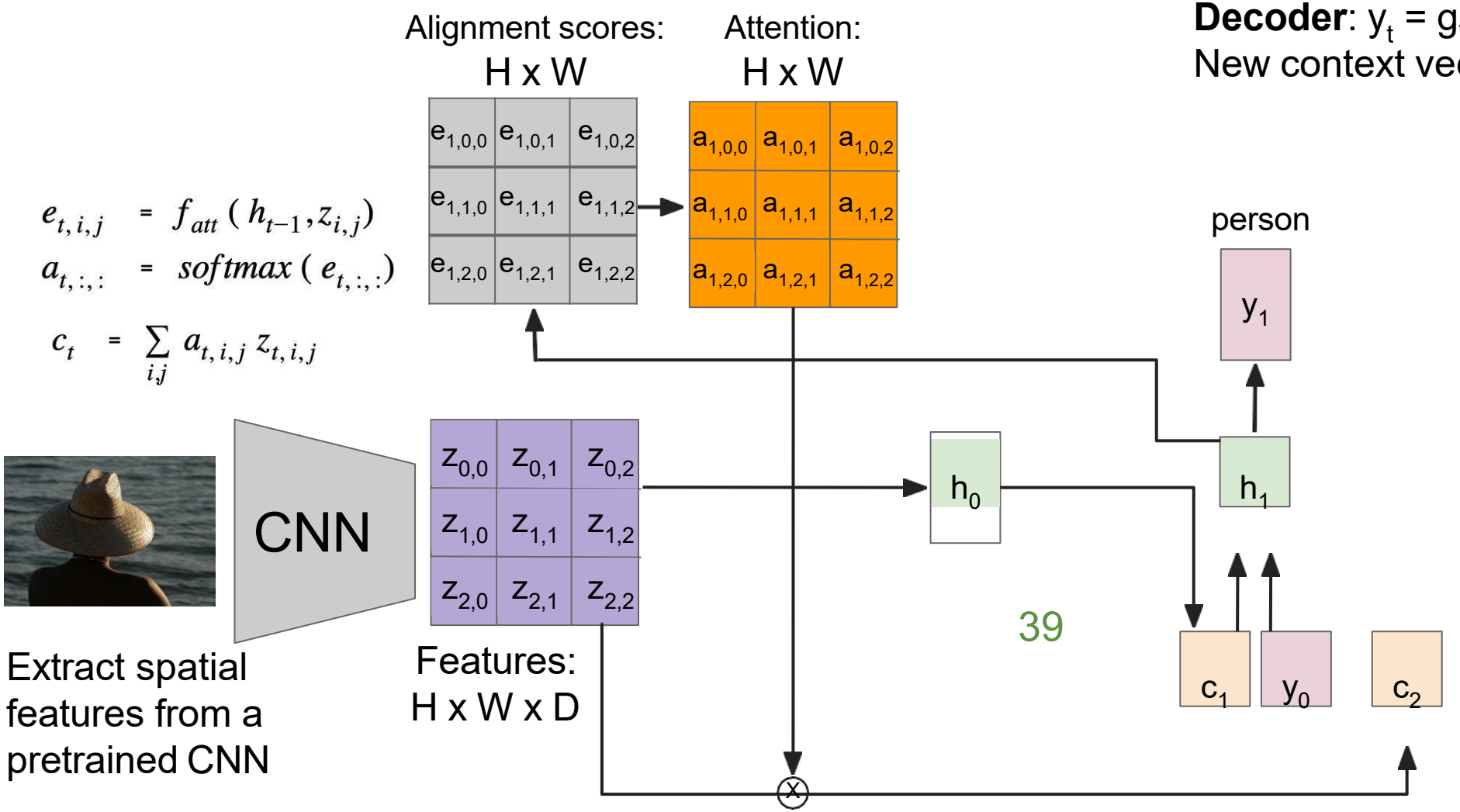

Xu et al, “Show, Attend and Tell: Neural Image Caption Generation with Visual Attention”, ICML 2015

Image Captioning with RNNs & Attention

Each timestep of decoder uses a different context vector that looks at different parts of the input image

Decoder: $y_t = g_V(y_{t-1}, h_{t-1}, c_t)$
New context vector at every time step

$$e_{t,i,j} = f_{att}(h_{t-1}, z_{i,j})$$
$$a_{t,:,:} = softmax(e_{t,:,:})$$
$$c_t = \sum_{i,j} a_{t,i,j} z_{t,i,j}$$

CNN

Extract spatial features from a pretrained CNN

$z_{0,0}$ $z_{0,1}$ $z_{0,2}$
$z_{1,0}$ $z_{1,1}$ $z_{1,2}$
$z_{2,0}$ $z_{2,1}$ $z_{2,2}$

Features: H x W x D

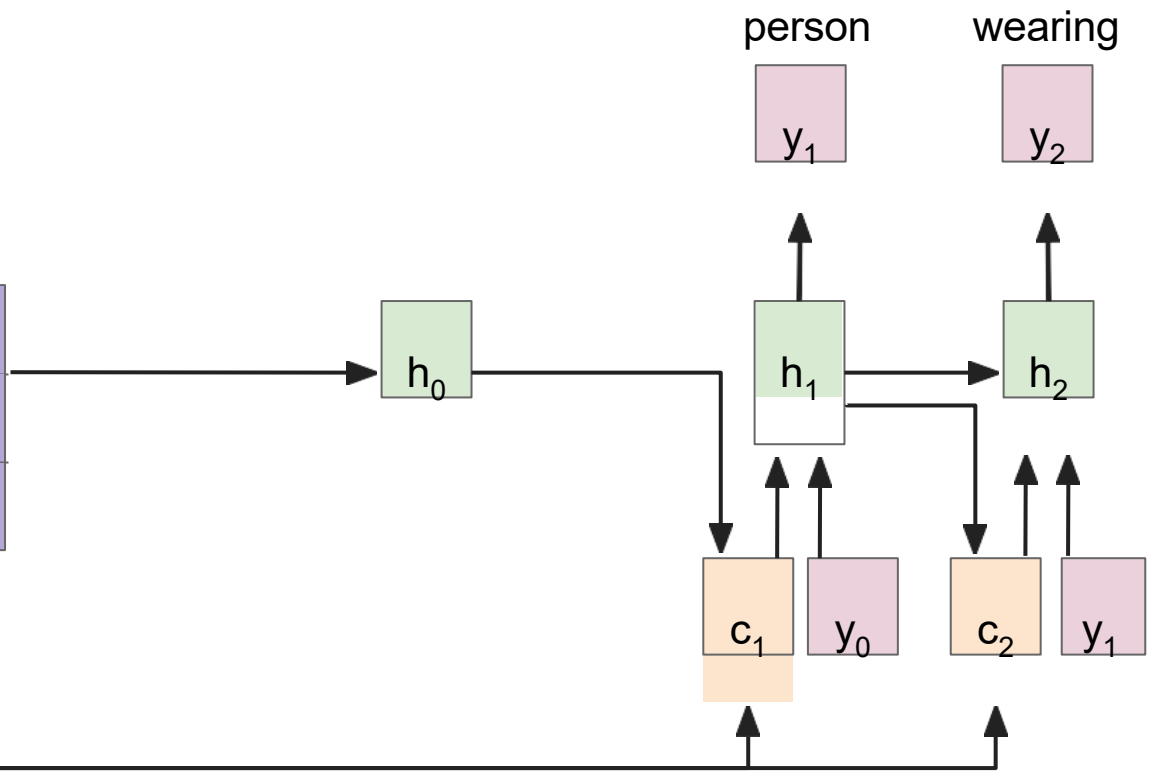

Xu et al, “Show, Attend and Tell: Neural Image Caption Generation with Visual Attention”, ICML 2015

Image Captioning with RNNs & Attention

Each timestep of decoder uses a different context vector that looks at different parts of the input image

Decoder: $y_t = g_V(y_{t-1}, h_{t-1}, c_t)$
New context vector at every time step

$$e_{t,i,j} = f_{att}(h_{t-1}, z_{i,j})$$
$$a_{t,:,:} = softmax(e_{t,:,:})$$
$$c_t = \sum_{i,j} a_{t,i,j} z_{t,i,j}$$

Extract spatial features from a pretrained CNN

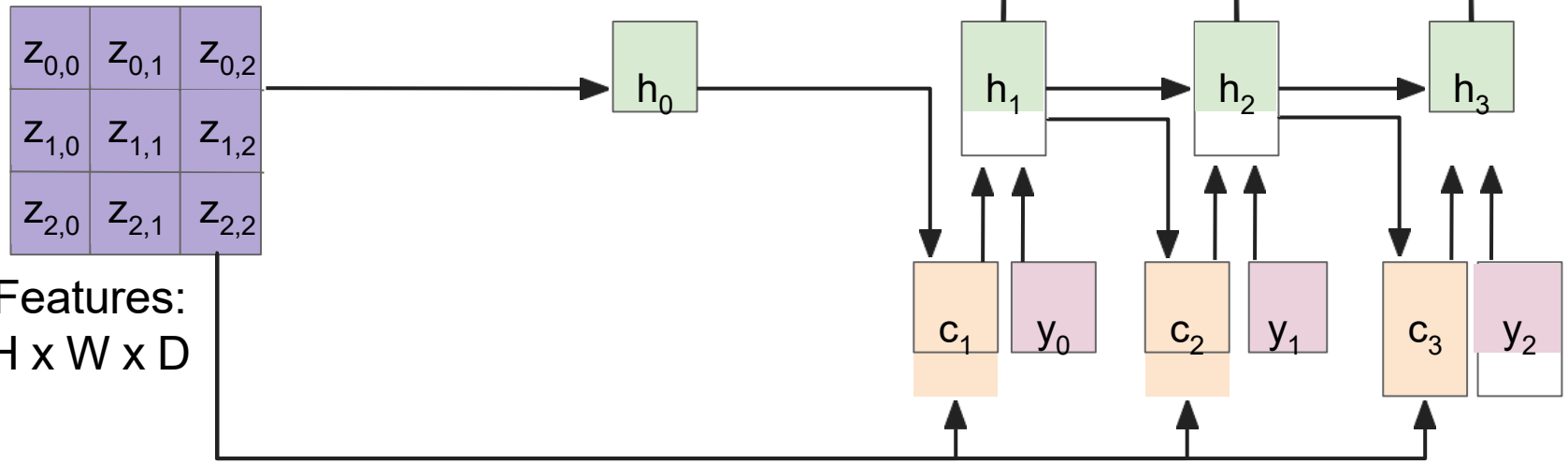

Xu et al, "Show, Attend and Tell: Neural Image Caption Generation with Visual Attention", ICML 2015

Image Captioning with RNNs & Attention

Each timestep of decoder uses a different context vector that looks at different parts of the input image

Decoder: $y_t = g_V(y_{t-1}, h_{t-1}, c_t)$
New context vector at every time step

$$e_{t,i,j} = f_{att}(h_{t-1}, z_{i,j})$$
$$a_{t,:,:} = softmax(e_{t,:,:})$$
$$c_t = \sum_{i,j} a_{t,i,j} z_{t,i,j}$$

Extract spatial features from a pretrained CNN

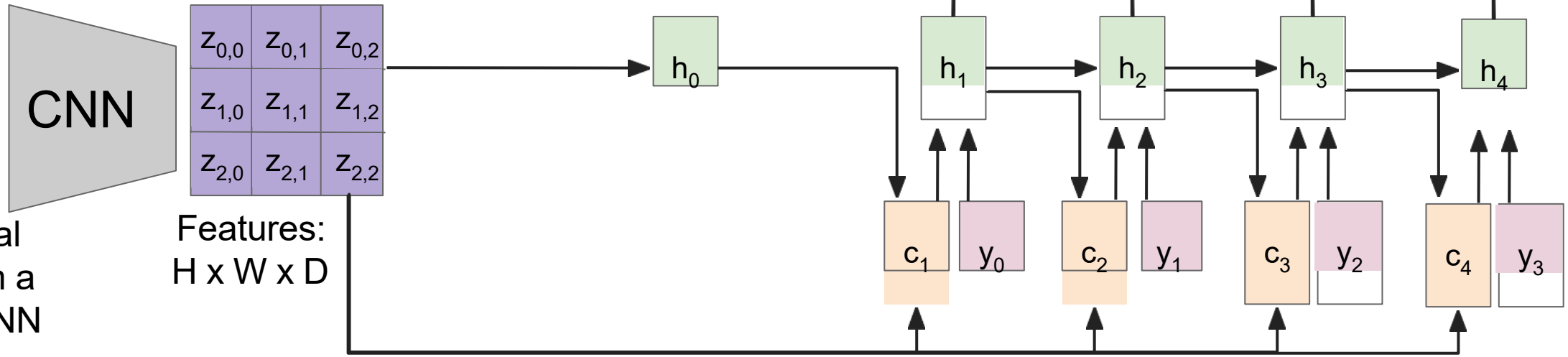

Xu et al, “Show, Attend and Tell: Neural Image Caption Generation with Visual Attention”, ICML 2015

Image Captioning with RNNs & Attention

This entire process is differentiable.
- model chooses its own attention weights. No attention supervision is required

Extract spatial features from a pretrained CNN

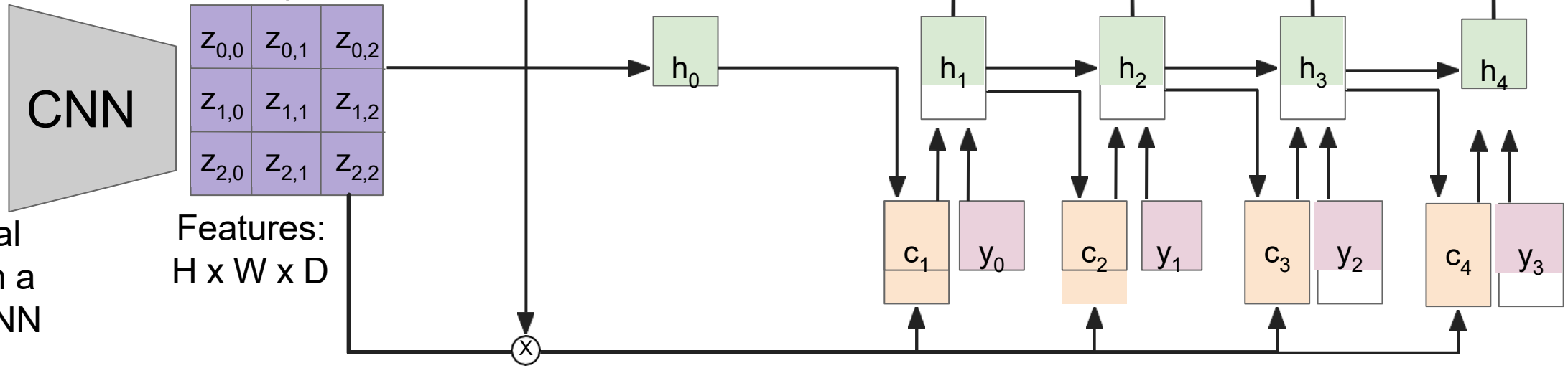

Xu et al, “Show, Attend and Tell: Neural Image Caption Generation with Visual Attention”, ICML 2015

Image Captioning with Attention

Soft attention

Hard attention
(requires reinforcement learning)

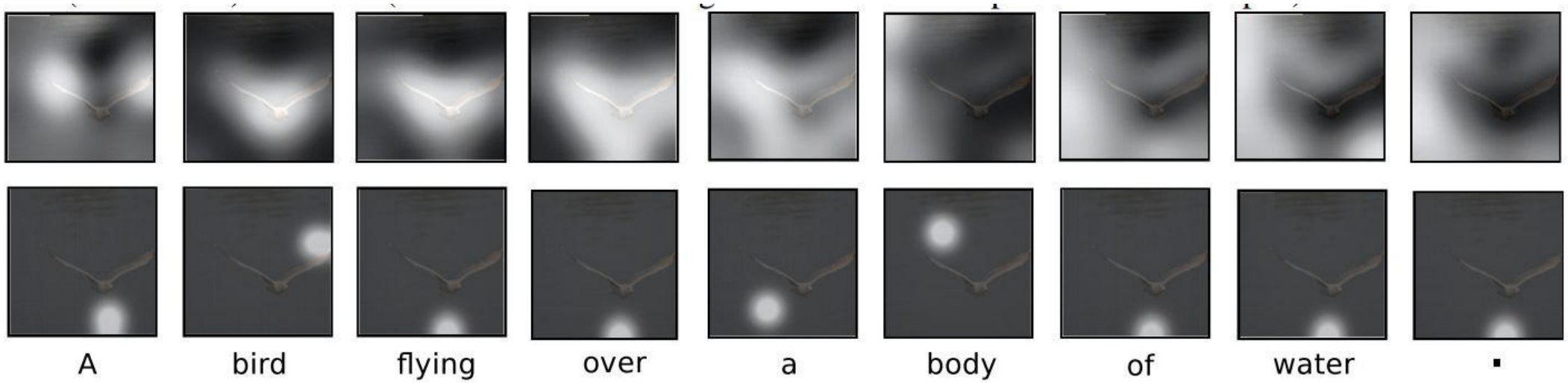

Xu et al, “Show, Attend, and Tell: Neural Image Caption Generation with Visual Attention”, ICML 2015

Figure copyright Kelvin Xu, Jimmy Lei Ba, Jamie Kiros, Kyunghyun Cho, Aaron Courville, Ruslan Salakhutdinov, Richard S. Zemel, and Yoshua Benchio, 2015. Reproduced with permission.

Image Captioning with Attention

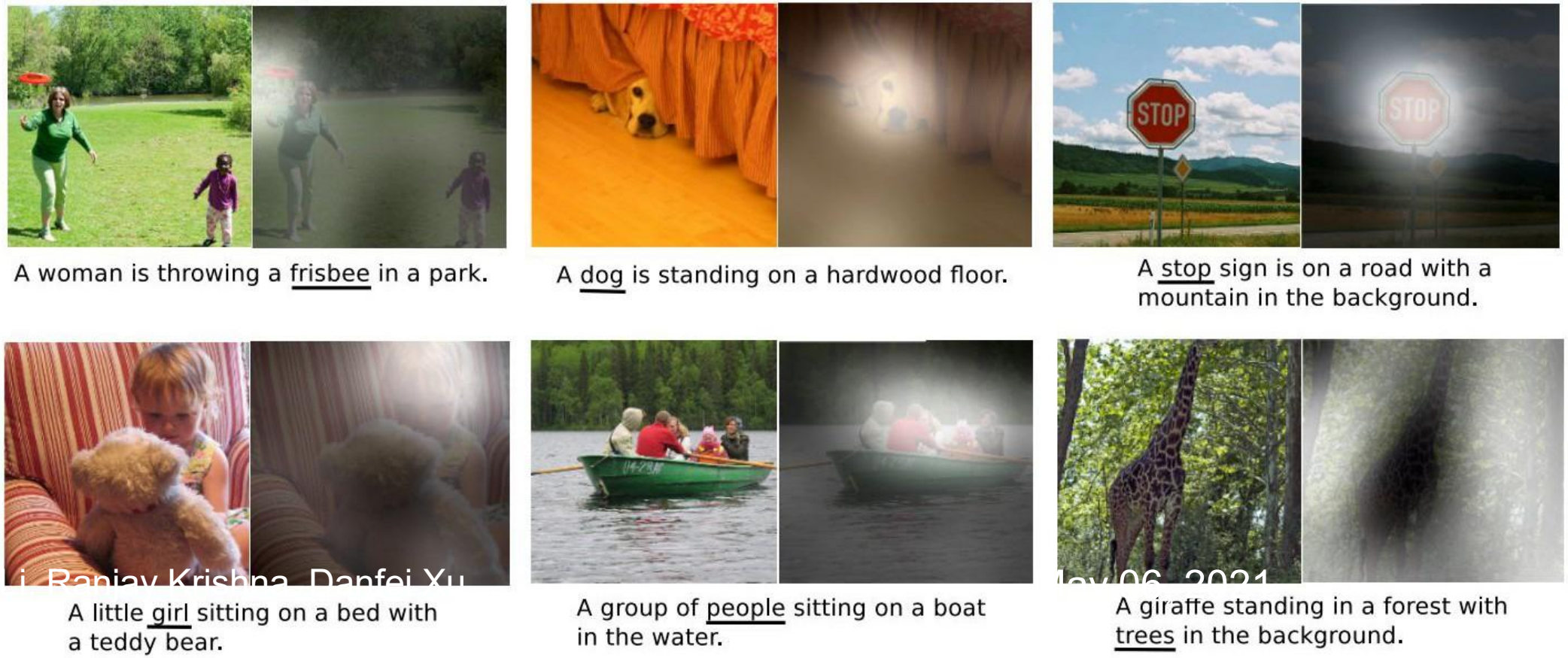

Xu et al, “Show, Attend, and Tell: Neural Image Caption Generation with Visual Attention”, ICML 2015

Figure copyright Kelvin Xu, Jimmy Lei Ba, Jamie Kiros, Kyunghyun Cho, Aaron Courville, Ruslan Salakhutdinov, Richard S. Zemel, and Yoshua Benchio, 2015. Reproduced with permission.

Attention can detect Gender Bias

Wrong

Baseline:
*A **man** sitting at a desk with a laptop computer.*

Right for the Right Reasons

Our Model:
*A **woman** sitting in front of a laptop computer.*

Right for the Wrong Reasons

Baseline:
*A **man** holding a tennis racquet on a tennis court.*

Right for the Right Reasons

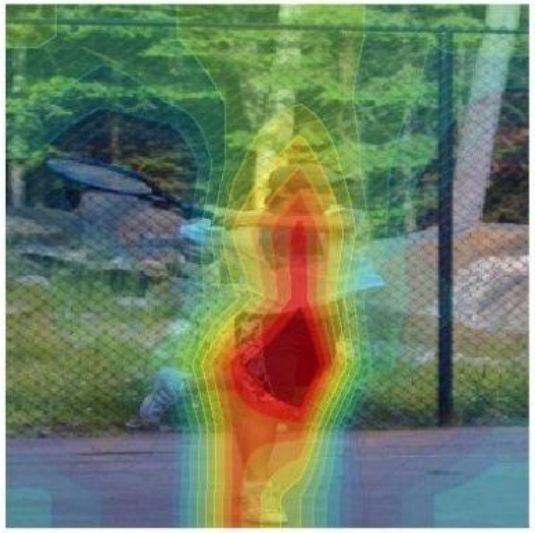

Our Model:
*A **man** holding a tennis racquet on a tennis court.*

Similar tasks in NLP - Language translation example

Input: Sequence **x** = $x_1, x_2, \ldots, x_T$
Output: Sequence **y** = $y_1, y_2, \ldots, y_T$

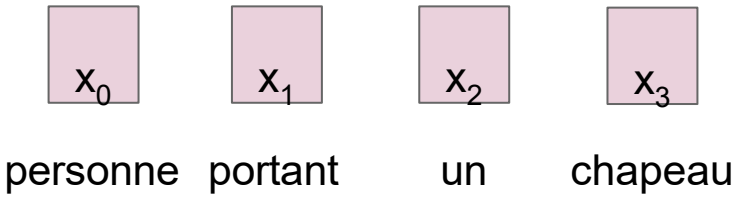

Similar tasks in NLP - Language translation example

Input: Sequence $\mathbf{x} = x_1, x_2, \ldots, x_T$
Output: Sequence $\mathbf{y} = y_1, y_2, \ldots, y_T$

Encoder: $h_0 = f_{\mathbf{W}}(\mathbf{z})$
where $z_t = \mathrm{RNN}(x_t, u_{t-1})$
$f_{\mathbf{W}}(.)$ is MLP
u is the hidden RNN state

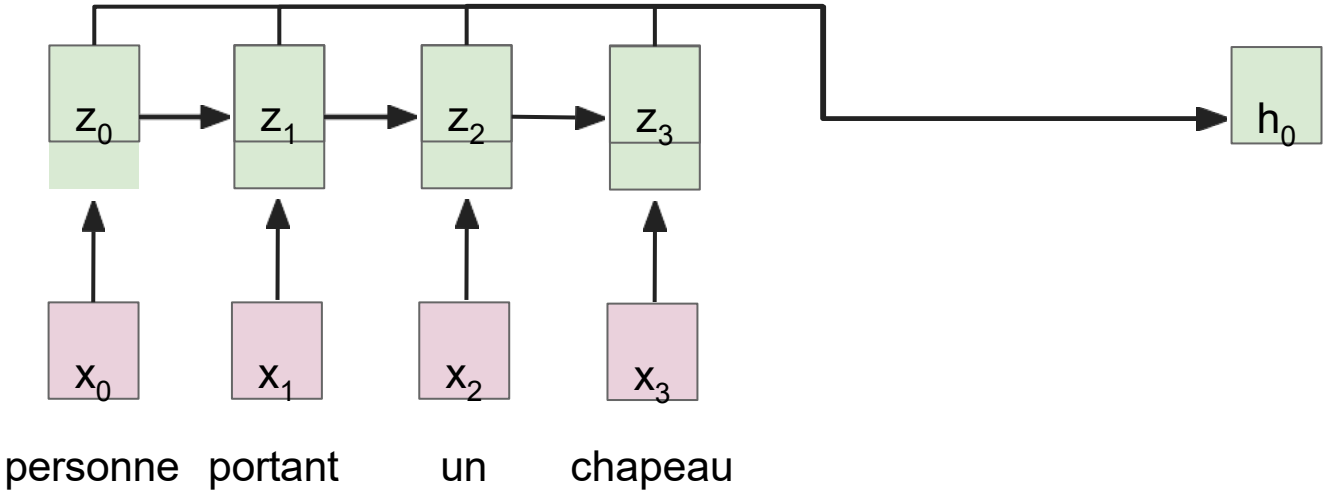

Similar tasks in NLP - Language translation example

Input: Sequence $\mathbf{x} = x_1, x_2, \ldots, x_T$
Output: Sequence $\mathbf{y} = y_1, y_2, \ldots, y_T$

Decoder: $y_t = g_{\mathbf{V}}(y_{t-1}, h_{t-1}, c)$
where context vector c is often $c = h_0$

Encoder: $h_0 = f_{\mathbf{W}}(\mathbf{z})$
where $z_t = \mathrm{RNN}(x_t, u_{t-1})$
$f_{\mathbf{W}}(.)$ is MLP
u is the hidden RNN state

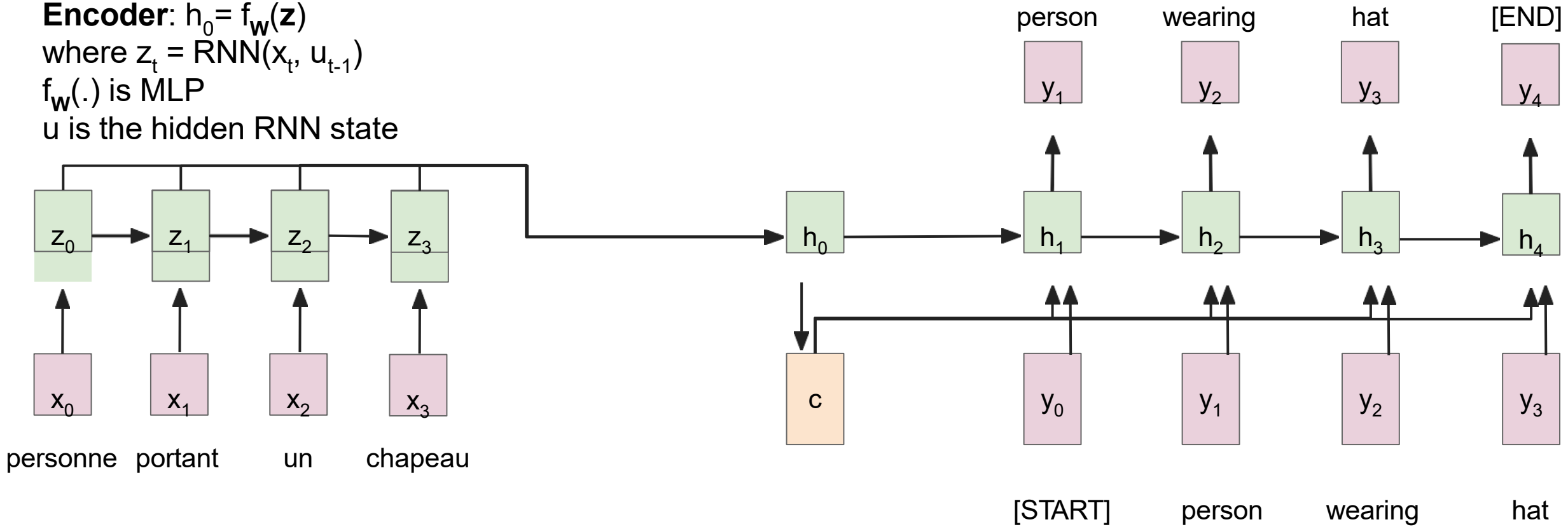

Attention in NLP - Language translation example

Compute alignments scores (scalars):

$$e_{t,i} = f_{att}(h_{t-1}, z_i)$$

$f_{att}(.)$ is an MLP

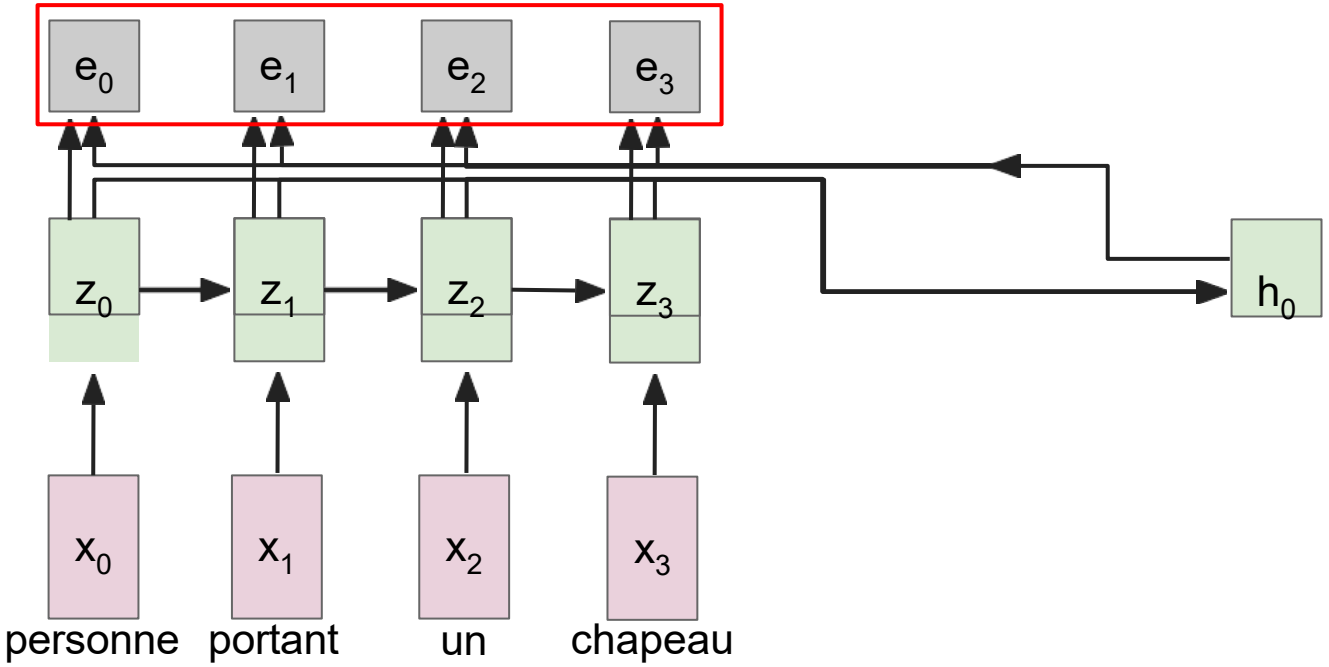

May 06, 2021

Attention in NLP - Language translation example

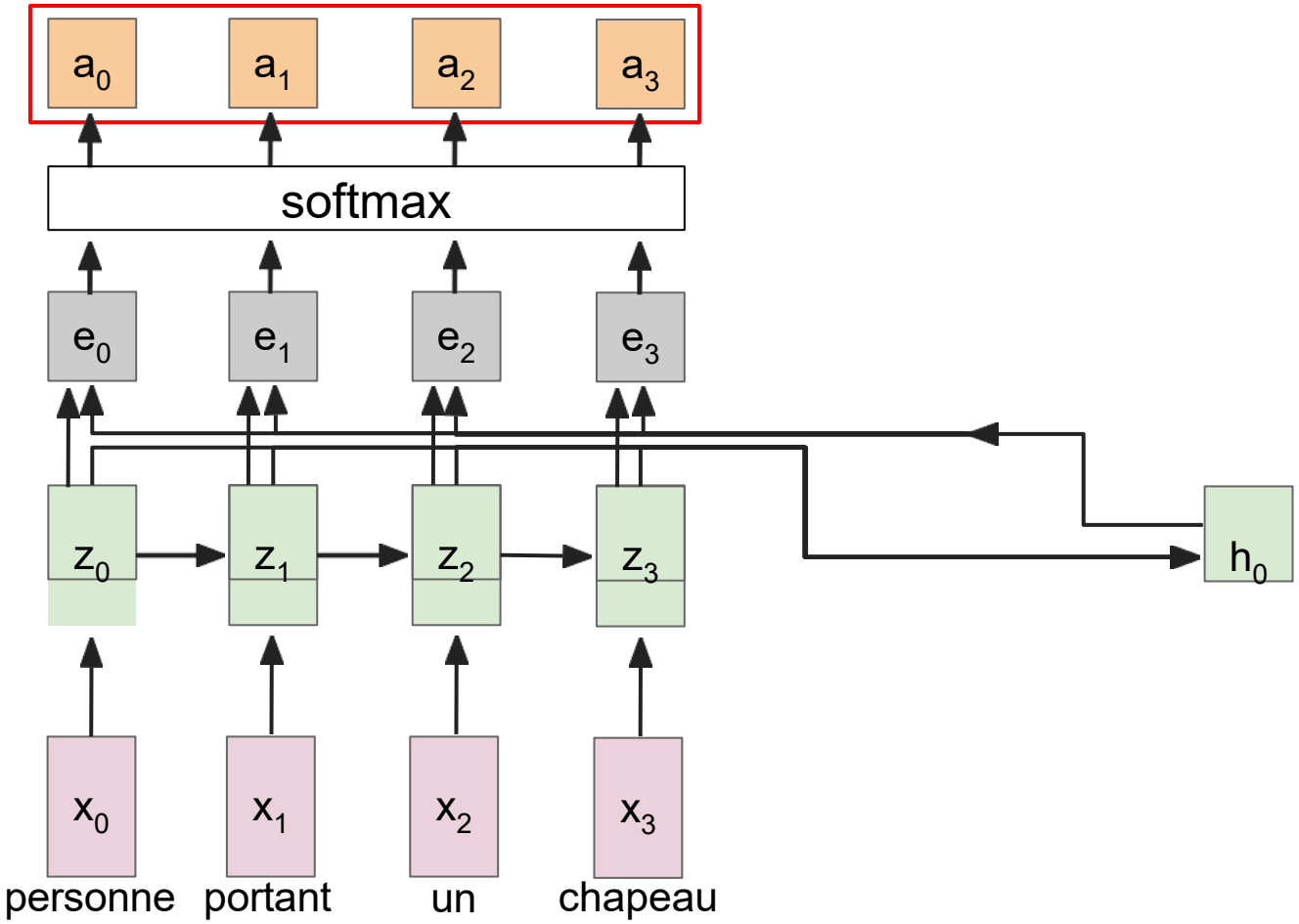

Compute alignments scores (scalars):

$$e_{t,i} = f_{att}(h_{t-1}, z_i)$$

$f_{att}(.)$ is an MLP

Normalize to get attention weights:

$$\boxed{a_{t,:} = softmax(e_{t,:})}$$

$0 < a_{t,i,j} < 1$,
attention values sum to 1

Attention in NLP - Language translation example

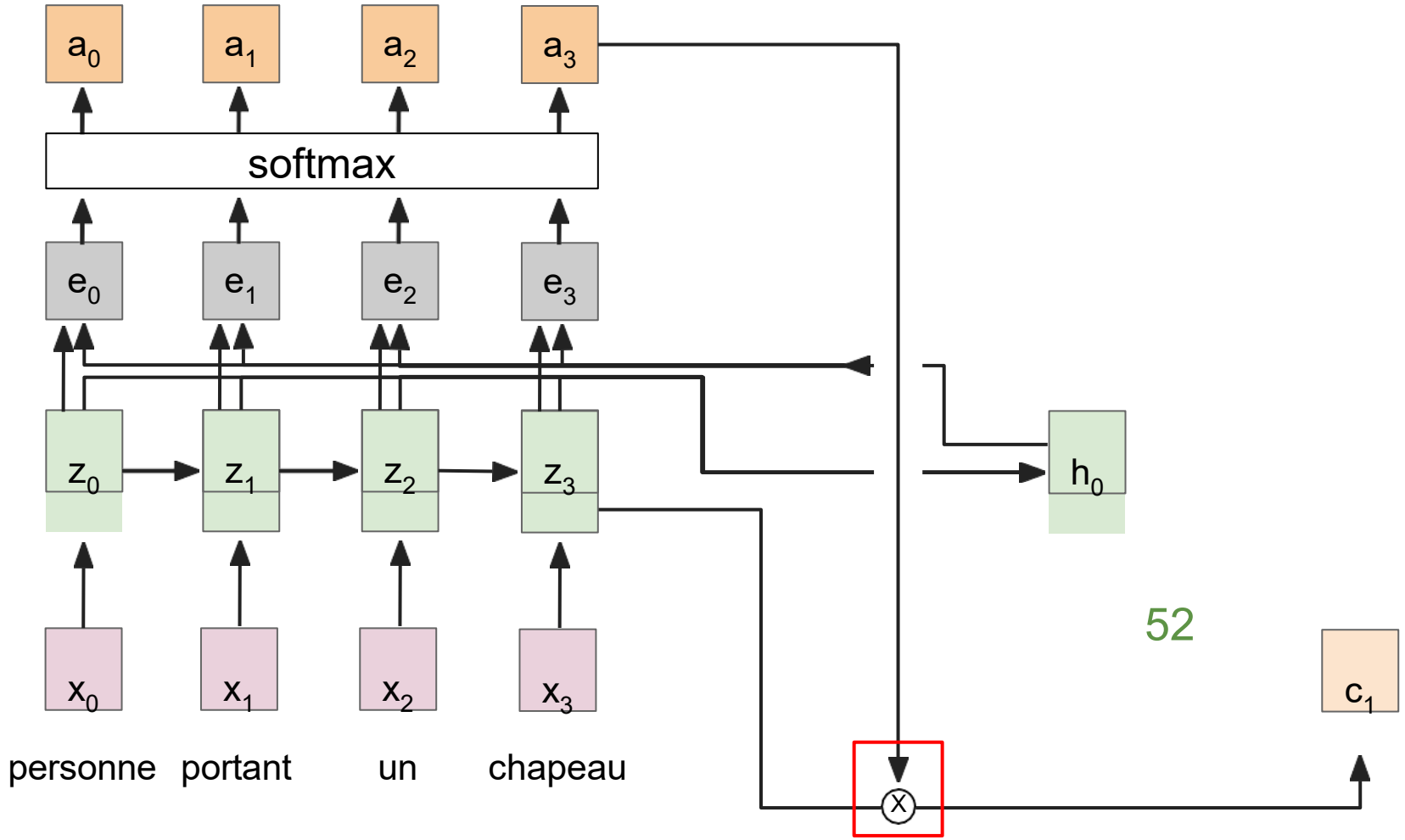

Compute alignments scores (scalars):

$$e_{t,i} = f_{att}(h_{t-1}, z_i)$$

$f_{att}(.)$ is an MLP

Normalize to get attention weights:

$$a_{t,:} = softmax(e_{t,:})$$

$0 < a_{t,i,j} < 1$,
attention values sum to 1

Compute context vector:

$$\boxed{c_t = \sum_i a_{t,i} z_{t,i}}$$

Attention in NLP - Language translation example

Decoder: $y_t = g_{\mathbf{V}}(y_{t-1}, h_{t-1}, c)$
where context vector c is often $c = h_0$

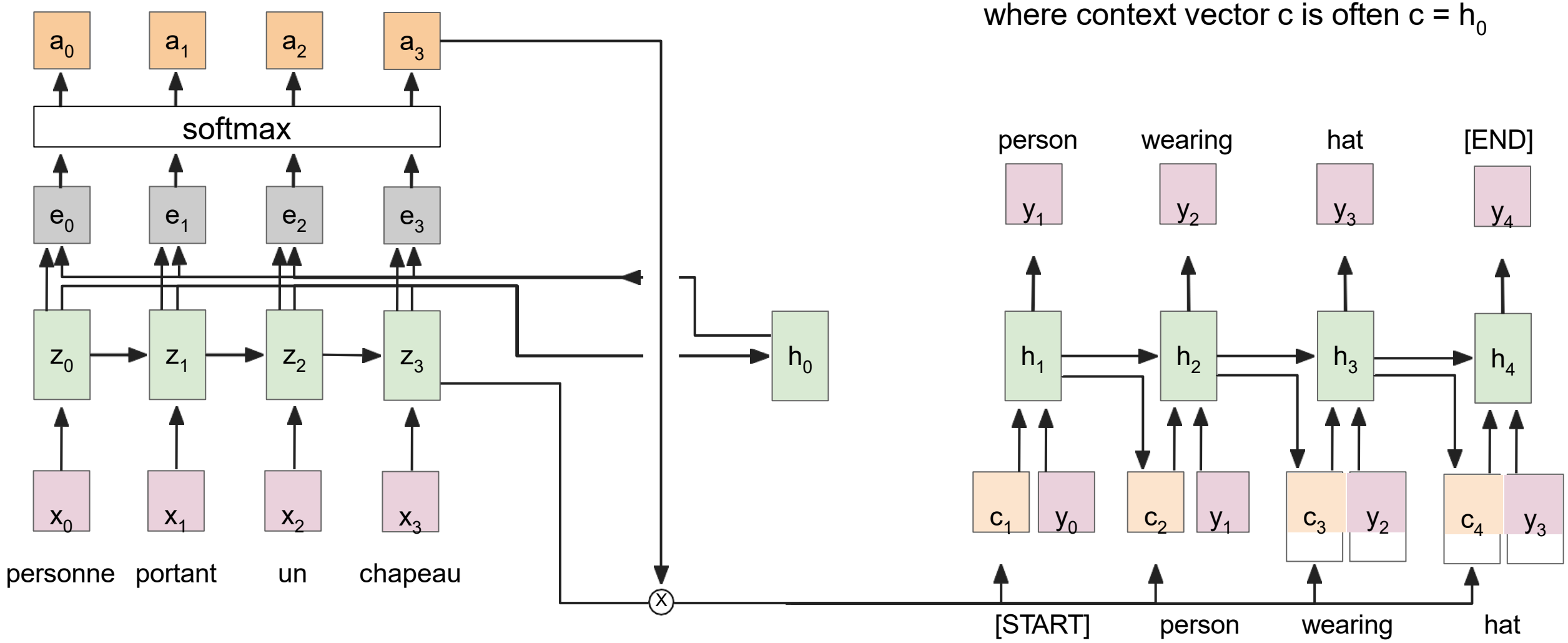

Similar visualization of attention weights

English to French translation example:

Input: "The agreement on the European Economic Area was signed in August 1992."

Output: "L'accord sur la zone économique européenne a été signé en août 1992."

Without any attention supervision, model learns different word orderings for different languages

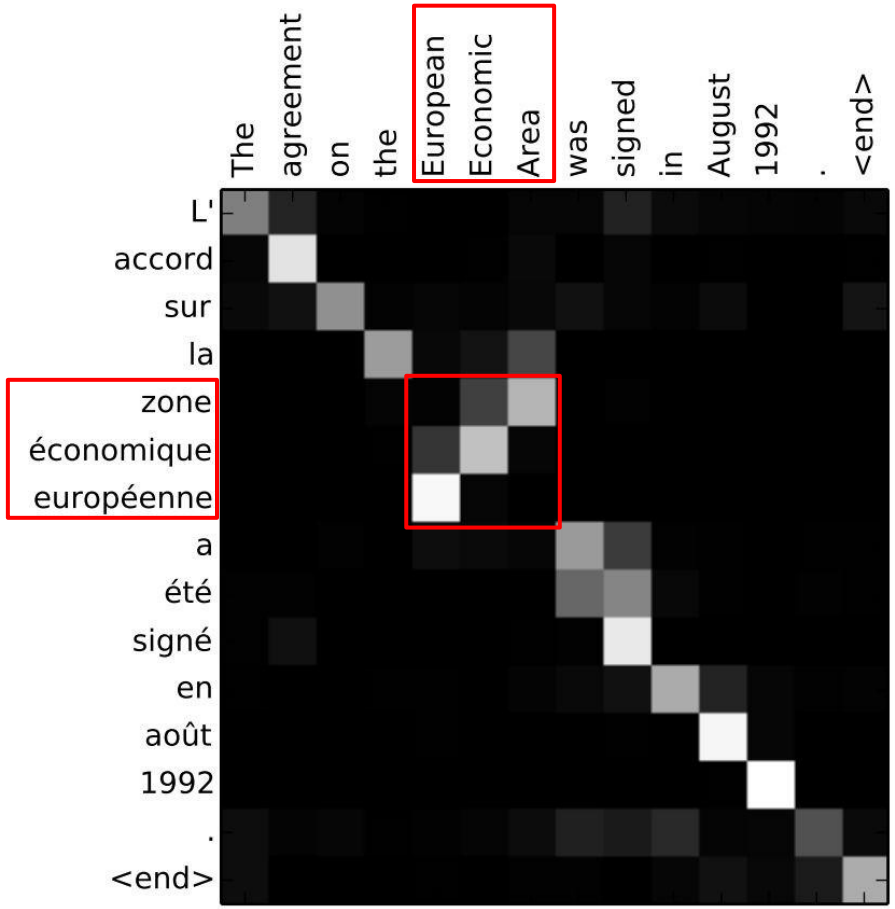

General Attention Layer

Attention we just saw in image captioning

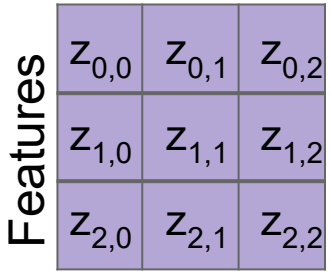

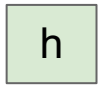

Inputs:
Features: **z** (shape: H x W x D)
Query: **h** (shape: D)

Attention we just saw in image captioning

Operations:
Alignment: $e_{i,j} = f_{att}(h, z_{i,j})$

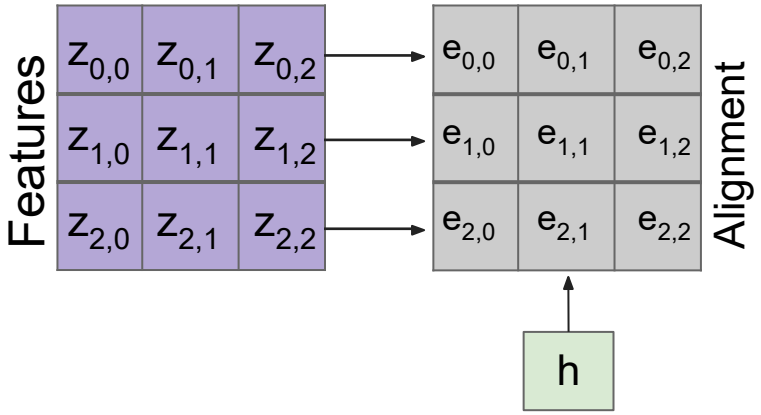

Inputs:
Features: **z** (shape: H x W x D)
Query: **h** (shape: D)

Attention we just saw in image captioning

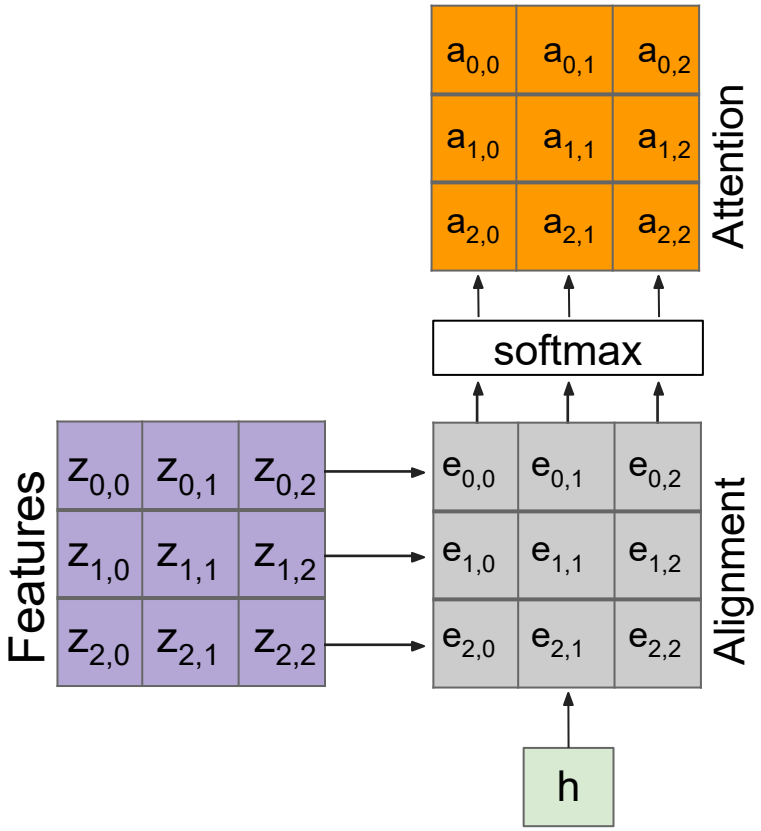

Operations:
Alignment: $e_{i,j} = f_{att}(h, z_{i,j})$
Attention: $\mathbf{a} = \text{softmax}(\mathbf{e})$

Inputs:
Features: **z** (shape: H x W x D)
Query: **h** (shape: D)

Attention we just saw in image captioning

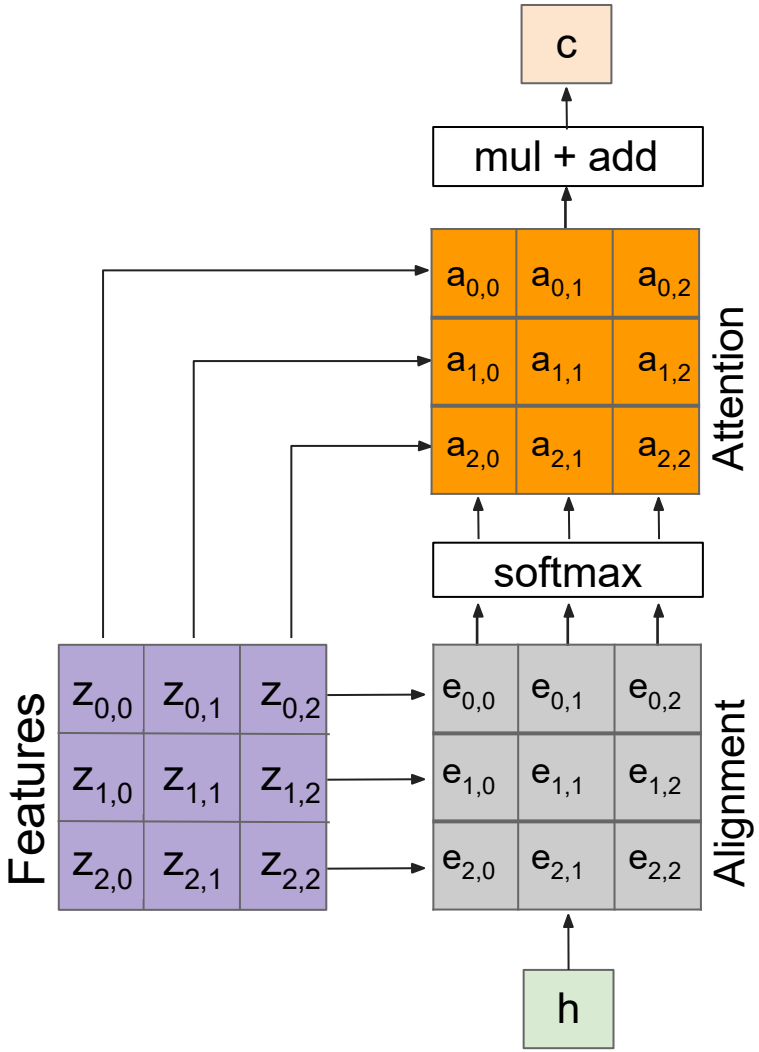

Outputs:
context vector: **c** (shape: D)

Operations:
Alignment: $e_{i,j} = f_{att}(h, z_{i,j})$
Attention: $\mathbf{a} = \text{softmax}(\mathbf{e})$
Output: $\mathbf{c} = \sum_{i,j} a_{i,j} z_{i,j}$

Inputs:
Features: **z** (shape: H x W x D)
Query: **h** (shape: D)

General attention layer

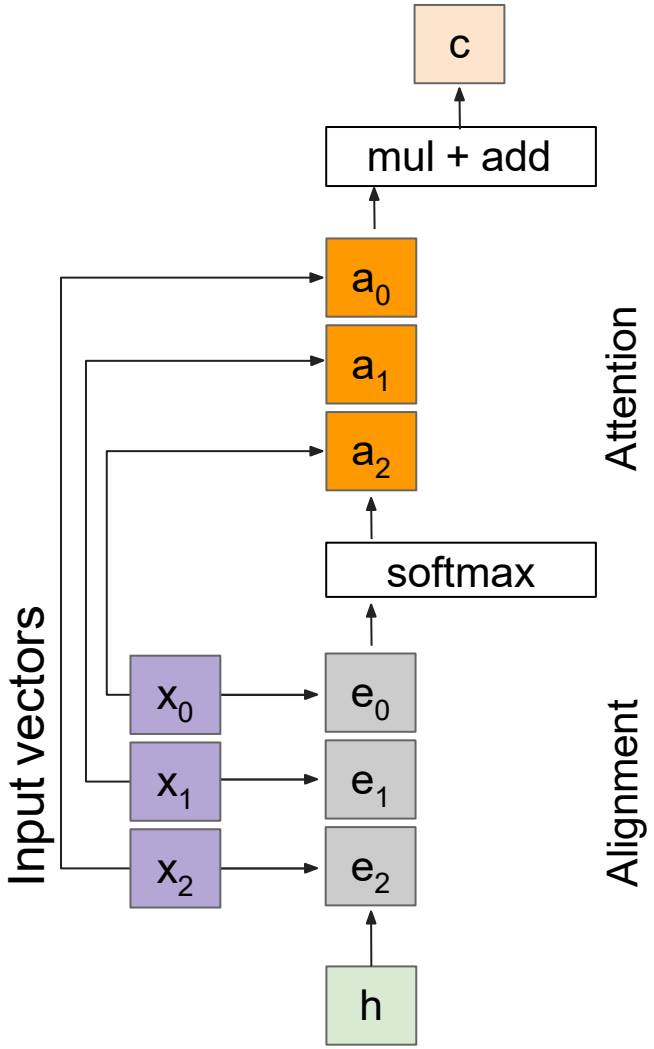

Outputs:
context vector: **c** (shape: D)

Operations:
Alignment: $e_i = f_{att}(h, x_i)$
Attention: **a** = softmax(**e**)
Output: **c** = $\sum_i a_i x_i$

Inputs:
Input vectors: **x** (shape: N x D)
Query: **h** (shape: D)

Attention operation is **permutation invariant.**

- Doesn't care about ordering of the features
- Stretch H x W = N into N vectors

General attention layer

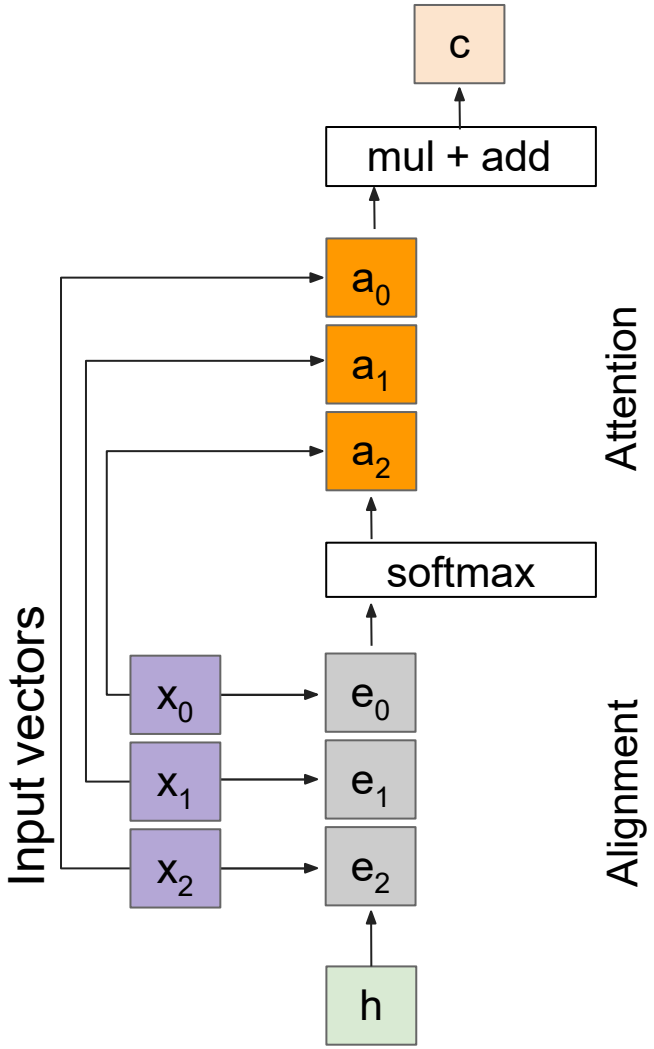

Outputs:
context vector: **c** (shape: D)

Operations:
Alignment: $e_i = h \cdot x_i$
Attention: **a** = softmax(**e**)
Output: **c** = $\sum_i a_i x_i$

Change $f_{att}(.)$ to a simple dot product
- only works well with key & value transformation trick (will mention in a few slides)

Inputs:
Input vectors: **x** (shape: N x D)
Query: **h** (shape: D)

General attention layer

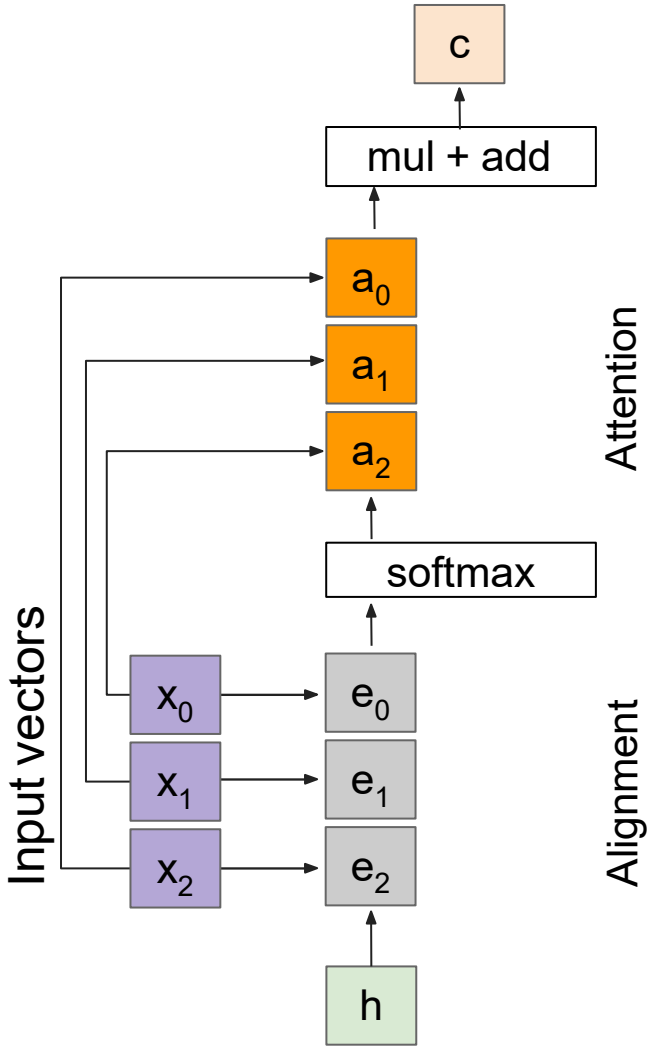

Outputs:
context vector: **c** (shape: D)

Operations:
Alignment: $e_i = h \cdot x_i / \sqrt{D}$
Attention: **a** = softmax(**e**)
Output: $\mathbf{c} = \sum_i a_i x_i$

Inputs:
Input vectors: **x** (shape: N x D)
Query: **h** (shape: D)

Change $f_{att}(.)$ to a scaled simple dot product

- Larger dimensions means more terms in the dot product sum.
- So, the variance of the logits is higher. Large magnitude vectors will produce much higher logits.
- So, the post-softmax distribution has lower-entropy, assuming logits are IID.
- Ultimately, these large magnitude vectors will cause softmax to peak and assign very little weight to all others
- Divide by $\sqrt{D}$ to reduce effect of large magnitude vectors

General attention layer

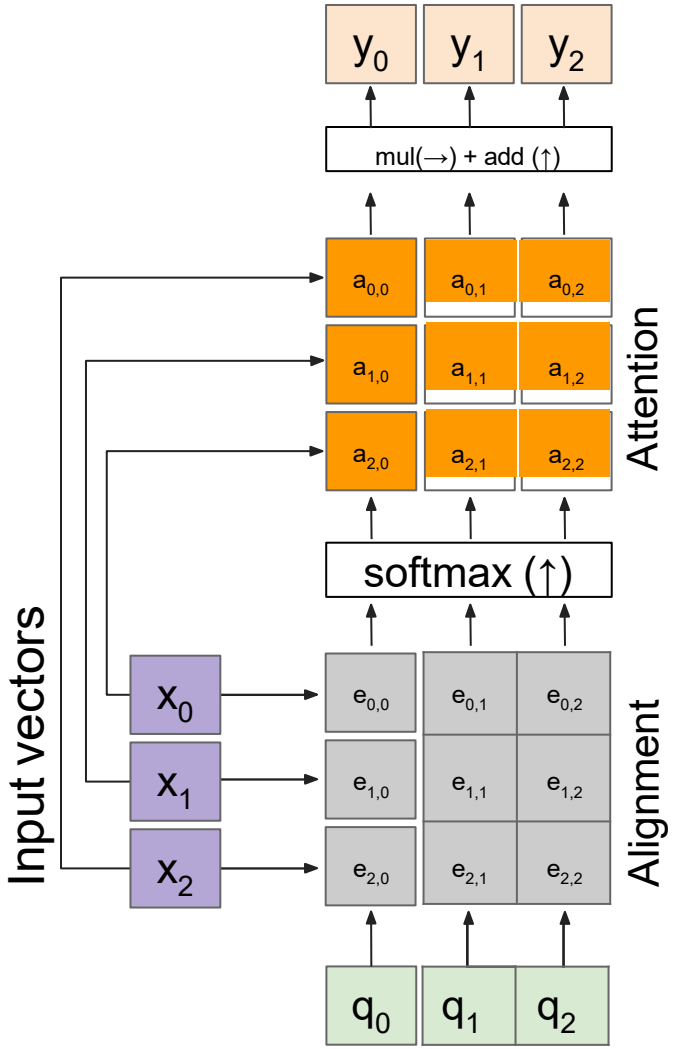

Outputs:
context vectors: **y** (shape: D)

Multiple query vectors
- each query creates a new output context vector

Operations:
Alignment: $e_{i,j} = q_j \cdot x_i / \sqrt{D}$
Attention: **a** = softmax(**e**)
Output: $y_j = \sum_i a_{i,j} x_i$

Multiple query vectors

Inputs:
Input vectors: **x** (shape: N x D)
Queries: **q** (shape: M x D)

General attention layer

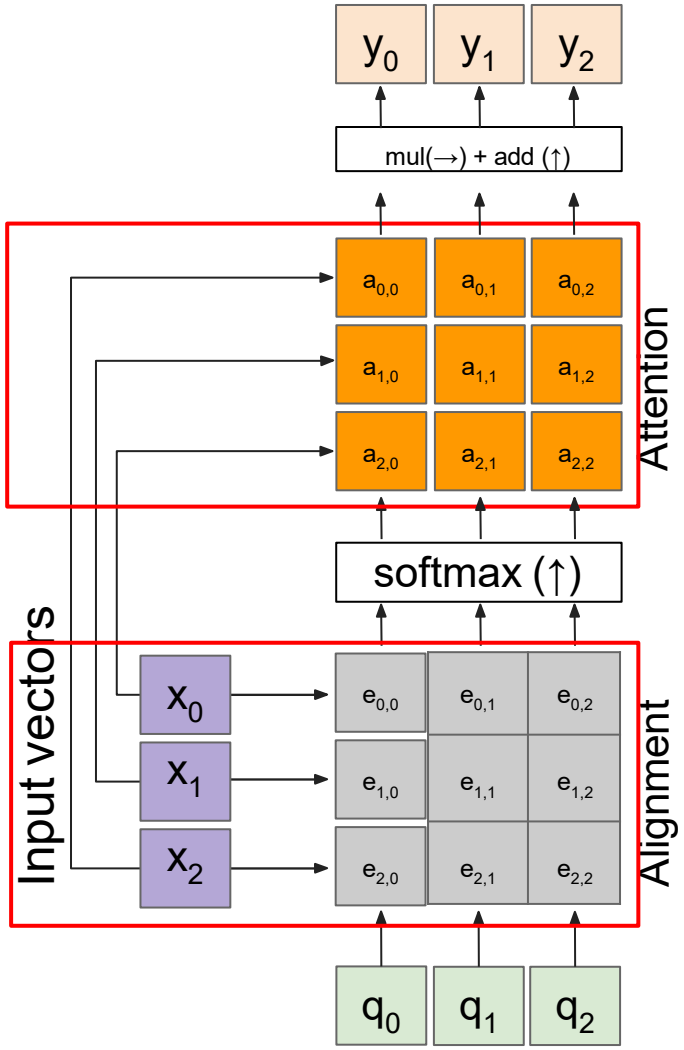

Outputs:
context vectors: **y** (shape: D)

Operations:
Alignment: $e_{i,j} = q_j \cdot x_i / \sqrt{D}$
Attention: **a** = softmax(**e**)
Output: $y_j = \sum_i a_{i,j} x_i$

Inputs:
Input vectors: **x** (shape: N x D)
Queries: **q** (shape: M x D)

Notice that the input vectors are used for both the alignment as well as the attention calculations.

- We can add more expressivity to the layer by adding a different FC layer before each of the two steps.

General attention layer

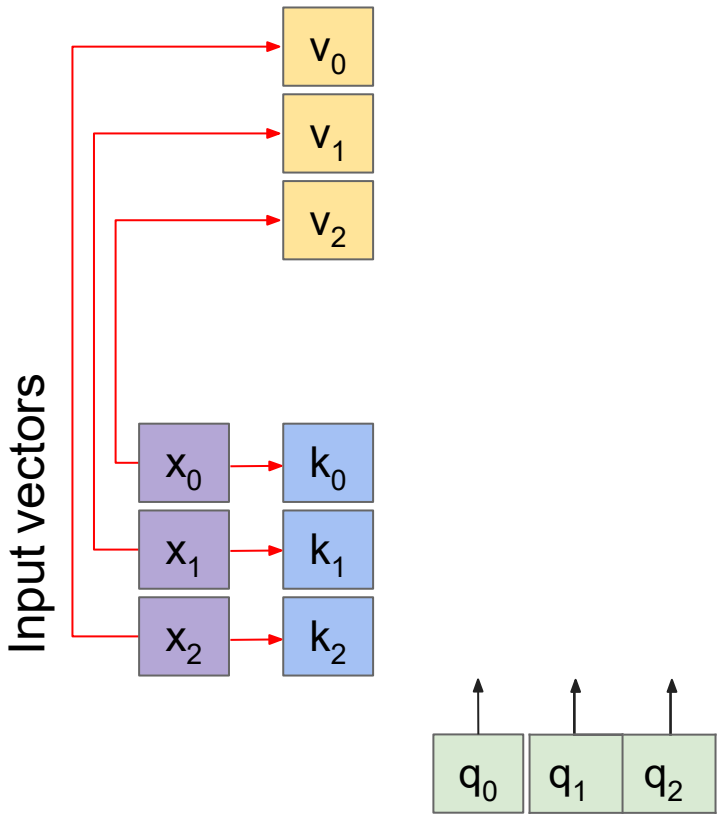

Operations:
Key vectors: $\mathbf{k} = \mathbf{x}\mathbf{W}_k$
Value vectors: $\mathbf{v} = \mathbf{x}\mathbf{W}_v$

Inputs:
Input vectors: **x** (shape: N x D)
Queries: **q** (shape: M x D_k)

Notice that the input vectors are used for both the alignment as well as the attention calculations.

- We can add more expressivity to the layer by adding a different FC layer before each of the two steps.

General attention layer

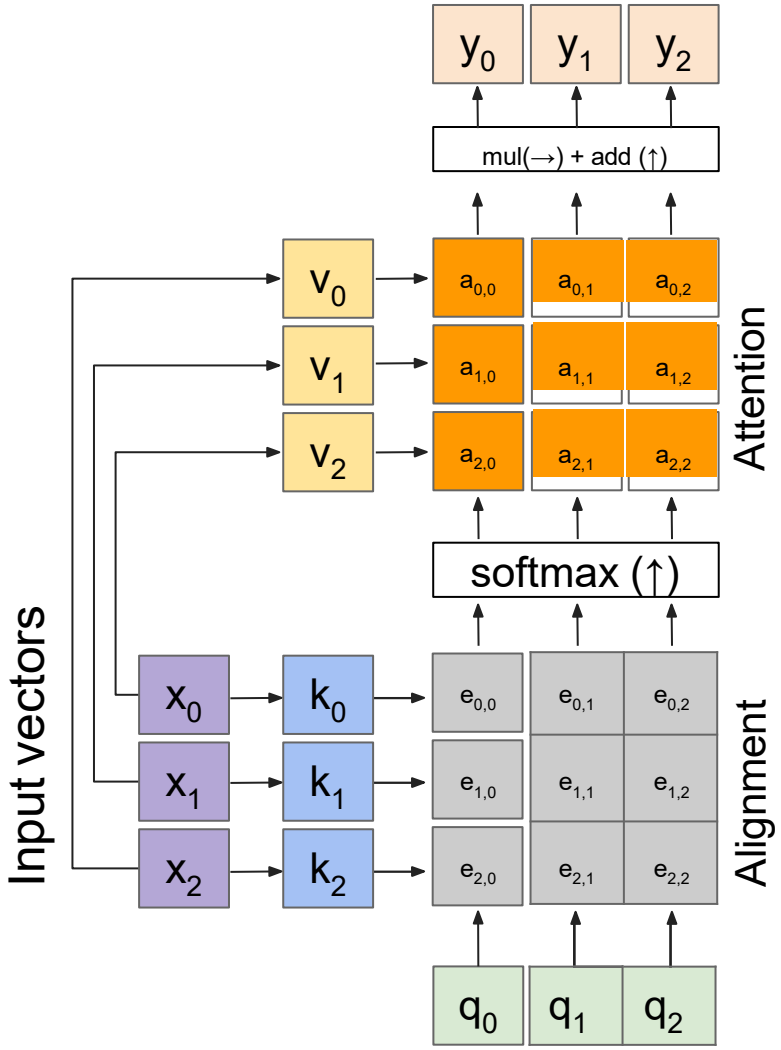

Outputs:
context vectors: **y** (shape: $\boxed{D_v}$)

Operations:
Key vectors: $\mathbf{k} = \mathbf{x}\mathbf{W}_k$
Value vectors: $\mathbf{v} = \mathbf{x}\mathbf{W}_v$
Alignment: $e_{i,j} = q_j \cdot k_i / \sqrt{D}$
Attention: $\mathbf{a} = \text{softmax}(\mathbf{e})$
Output: $y_j = \sum_i a_{i,j} v_i$

Inputs:
Input vectors: **x** (shape: N x D)
Queries: **q** (shape: M x $\boxed{D_k}$)

The input and output dimensions can now change depending on the key and value FC layers

Notice that the input vectors are used for both the alignment as well as the attention calculations.

- We can add more expressivity to the layer by adding a different FC layer before each of the two steps.

General attention layer

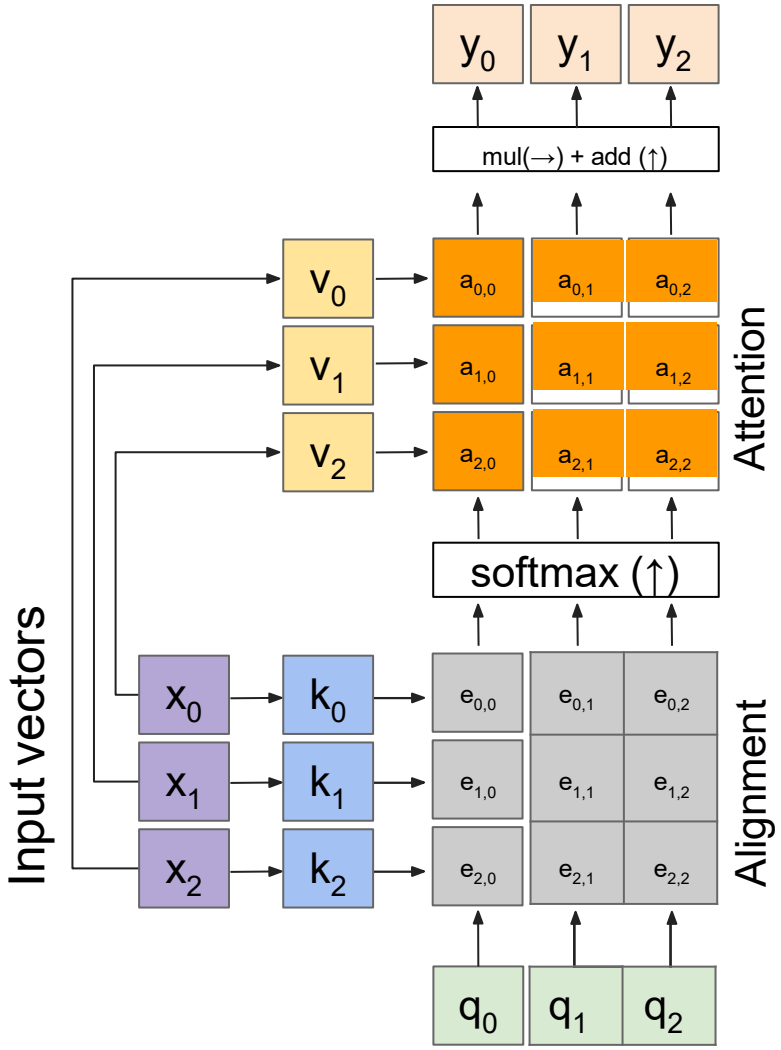

Outputs:
context vectors: **y** (shape: D_v)

Operations:
Key vectors: $\mathbf{k} = \mathbf{x}\mathbf{W}_k$
Value vectors: $\mathbf{v} = \mathbf{x}\mathbf{W}_v$
Alignment: $e_{i,j} = q_j \cdot k_i / \sqrt{D}$
Attention: $\mathbf{a} = \text{softmax}(\mathbf{e})$
Output: $y_j = \sum_i a_{i,j} v_i$

Inputs:
Input vectors: **x** (shape: N x D)
Queries: **q** (shape: M x D_k)

Recall that the query vector was a function of the input vectors

Encoder: $h_0 = f_{\mathbf{W}}(\mathbf{z})$
where **z** is spatial CNN features
$f_{\mathbf{W}}(.)$ is an MLP

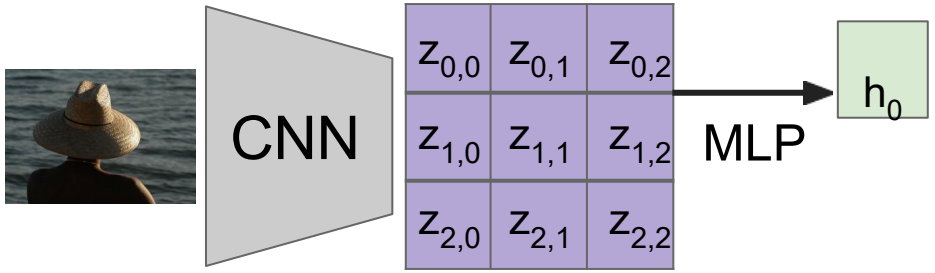

Self attention layer

We can calculate the query vectors from the input vectors, therefore, defining a "self-attention" layer.

Operations:
Key vectors: $\mathbf{k} = \mathbf{x}\mathbf{W}_k$
Value vectors: $\mathbf{v} = \mathbf{x}\mathbf{W}_v$
Query vectors: $\mathbf{q} = \mathbf{x}\mathbf{W}_q$
Alignment: $e_{i,j} = q_j \cdot k_i / \sqrt{D}$
Attention: $\mathbf{a} = \text{softmax}(\mathbf{e})$
Output: $y_j = \sum_i a_{i,j} v_i$

Instead, query vectors are calculated using a FC layer.

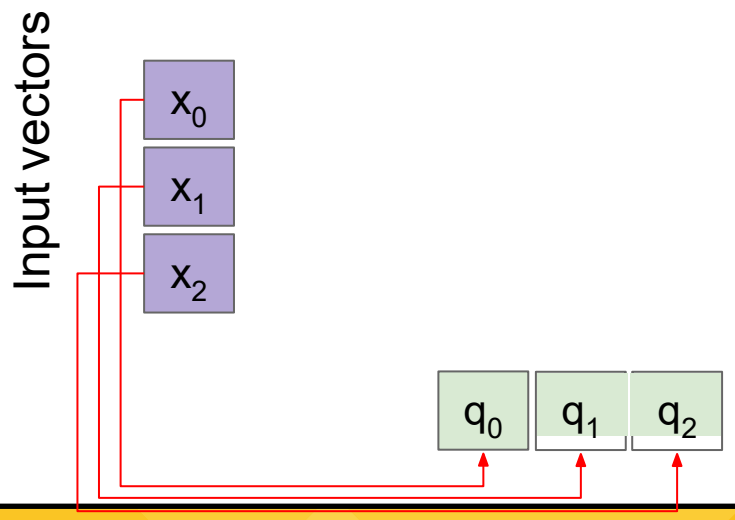

No input query vectors anymore

Inputs:
Input vectors: $\mathbf{x}$ (shape: N x D)
~~Queries: $\mathbf{q}$ (shape: M x D_k)~~

Self attention layer

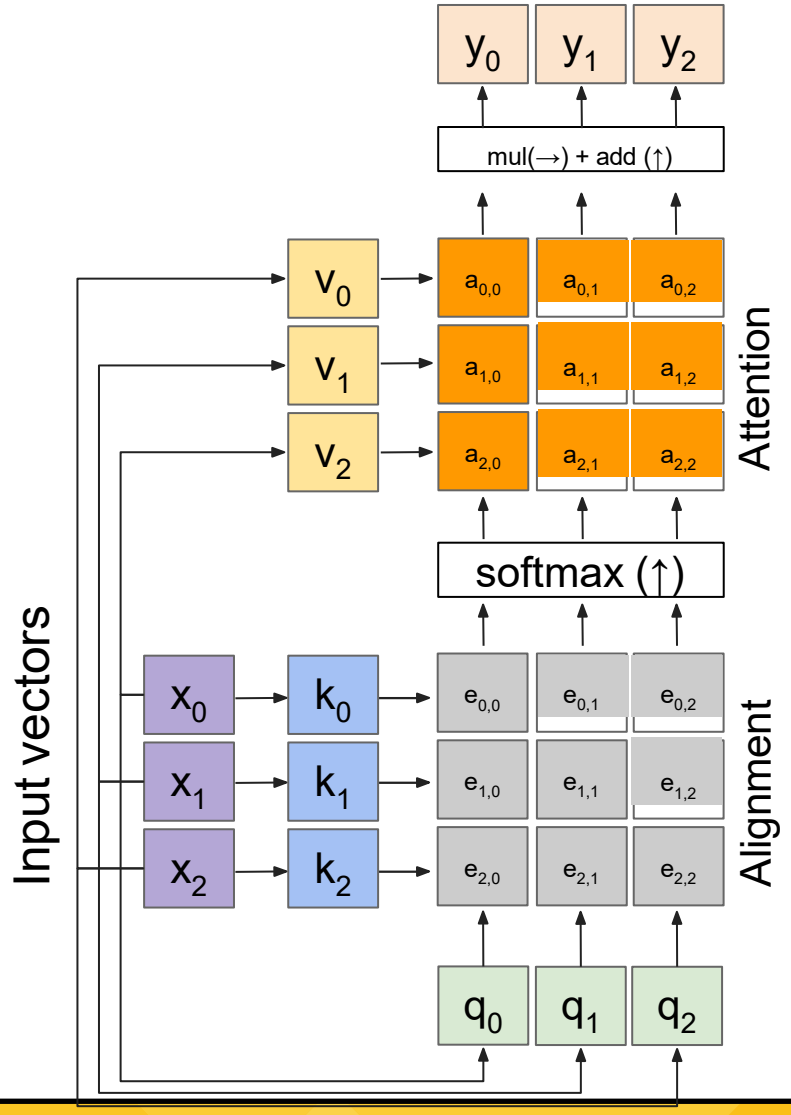

Outputs:
context vectors: **y** (shape: D_v)

Operations:
Key vectors: $\mathbf{k} = \mathbf{x}\mathbf{W}_k$
Value vectors: $\mathbf{v} = \mathbf{x}\mathbf{W}_v$
Query vectors: $\mathbf{q} = \mathbf{x}\mathbf{W}_q$
Alignment: $e_{i,j} = q_j \cdot k_i / \sqrt{D}$
Attention: $\mathbf{a} = \text{softmax}(\mathbf{e})$
Output: $y_j = \sum_i a_{i,j} v_i$

Inputs:
Input vectors: **x** (shape: N x D)

Self attention layer - attends over sets of inputs

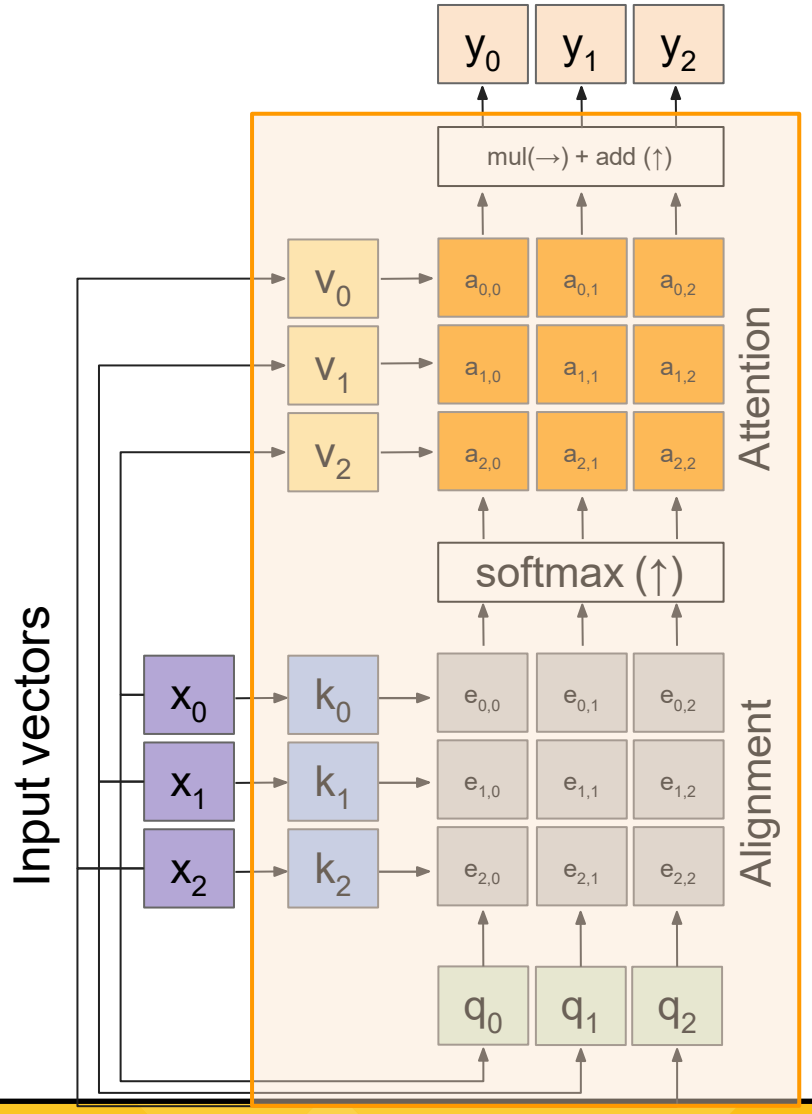

Outputs:
context vectors: **y** (shape: D_v)

Operations:
Key vectors: $\mathbf{k} = \mathbf{x}\mathbf{W}_k$
Value vectors: $\mathbf{v} = \mathbf{x}\mathbf{W}_v$
Query vectors: $\mathbf{q} = \mathbf{x}\mathbf{W}_q$
Alignment: $e_{i,j} = q_j \cdot k_i / \sqrt{D}$
Attention: $\mathbf{a} = \text{softmax}(\mathbf{e})$
Output: $y_j = \sum_i a_{i,j} v_i$

Inputs:
Input vectors: **x** (shape: N x D)

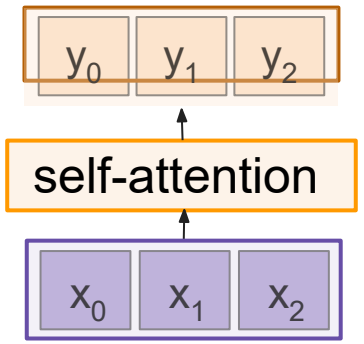

Self attention layer - attends over sets of inputs

Permutation invariant

Problem: how can we encode ordered sequences like language or spatially ordered image features?

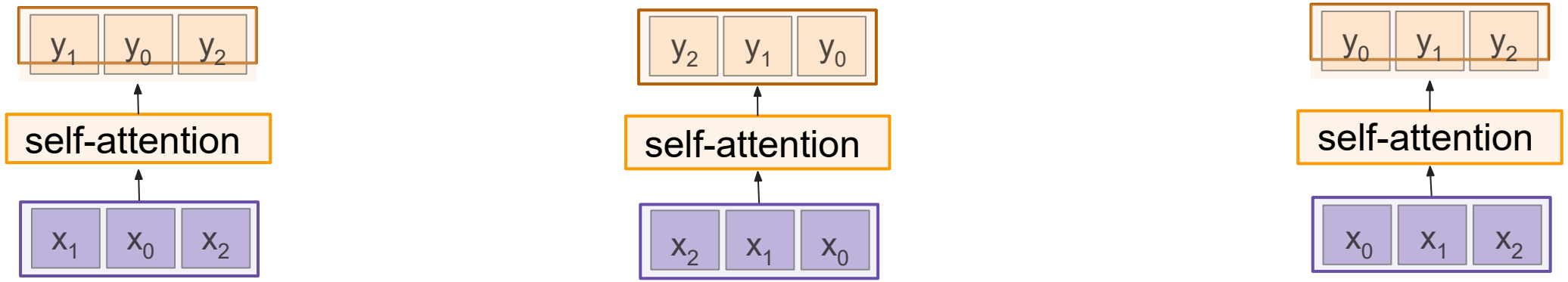

Positional encoding

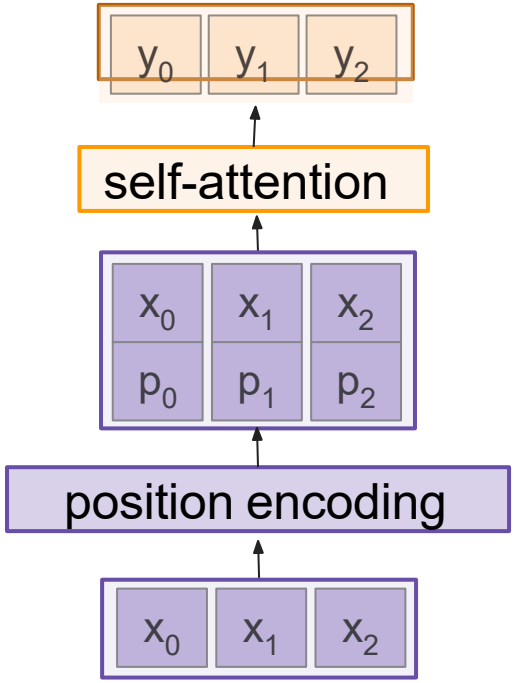

Concatenate special positional encoding p_j to each input vector x_j

We use a function *pos*: $N \rightarrow R^d$ to process the position j of the vector into a d-dimensional vector

So, $p_j = pos(j)$

Desiderata of *pos*(.) :

1. It should output a **unique** encoding for each time-step (word's position in a sentence)
2. **Distance** between any two time-steps should be consistent across sentences with different lengths.
3. Our model should generalize to **longer** sentences without any efforts. Its values should be bounded.
4. It must be **deterministic**.

Positional encoding

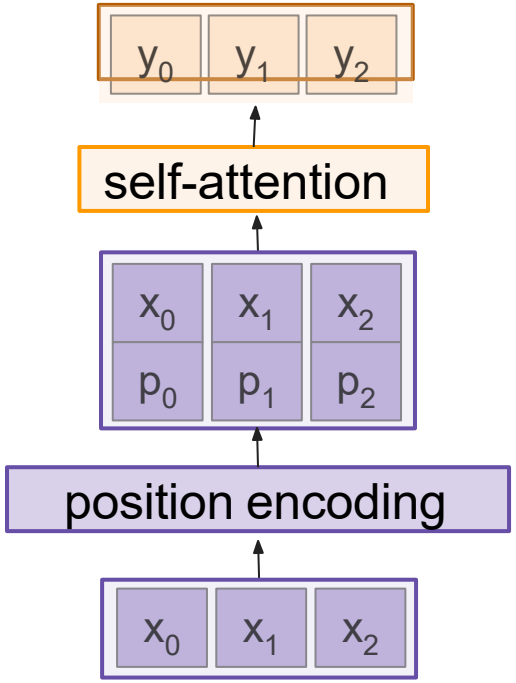

Concatenate special positional encoding p_j to each input vector x_j

We use a function *pos*: $N \rightarrow R^d$ to process the position j of the vector into a d-dimensional vector

Options for *pos*(.)

1. Learn a lookup table:
   - Learn parameters to use for *pos*(t) for $t \in [0, T)$
   - Lookup table contains T x d parameters.

Desiderata of *pos*(.) :

1. It should output a **unique** encoding for each time-step (word's position in a sentence)
2. **Distance** between any two time-steps should be consistent across sentences with different lengths.
3. Our model should generalize to **longer** sentences without any efforts. Its values should be bounded.
4. It must be **deterministic**.

Positional encoding

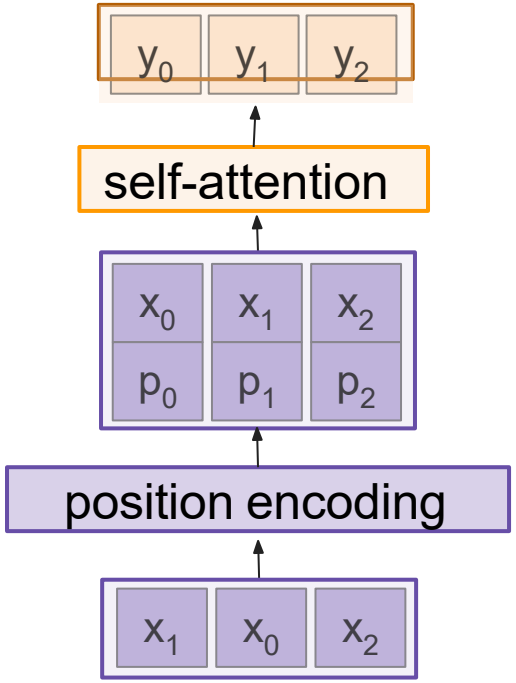

Concatenate special positional encoding p_j to each input vector x_j

We use a function *pos*: $N \rightarrow R^d$ to process the position j of the vector into a d-dimensional vector

Options for *pos*(.)

1. Learn a lookup table:
   - Learn parameters to use for *pos*(t) for $t \in [0, T)$
   - Lookup table contains T x d parameters.

2. Design a fixed function with the desiderata
   -

$$\mathbf{p(t)} = \begin{bmatrix} \sin(\omega_1 . t) \\ \cos(\omega_1 . t) \\ \\ \sin(\omega_2 . t) \\ \cos(\omega_2 . t) \\ \\ \vdots \\ \\ \sin(\omega_{d/2} . t) \\ \cos(\omega_{d/2} . t) \end{bmatrix}_d \quad \text{where } \omega_k = \frac{1}{10000^{2k/d}}$$

Positional encoding

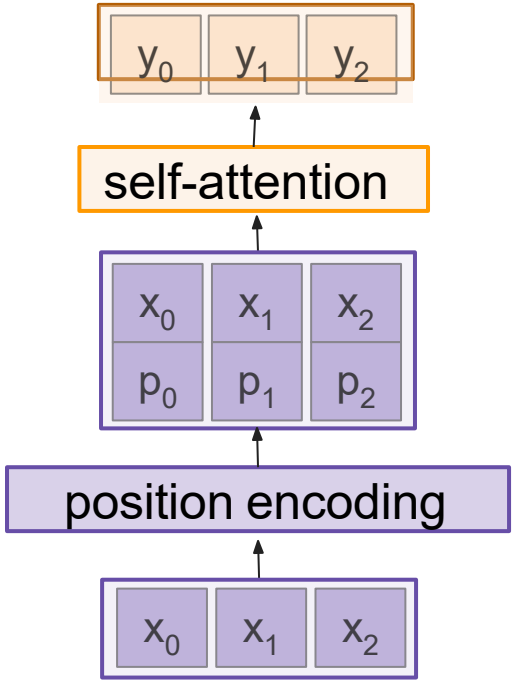

Concatenate special positional encoding p_j to each input vector x_j

We use a function *pos*: $N \rightarrow R^d$ to process the position j of the vector into a d-dimensional vector

Options for *pos*(.)

1. Learn a lookup table:
   - Learn parameters to use for *pos*(t) for $t \in [0, T)$
   - Lookup table contains T x d parameters.

2. Design a fixed function with the desiderata
   -

$$\mathbf{p(t)} = \begin{bmatrix} \sin(\omega_1 . t) \\ \cos(\omega_1 . t) \\ \\ \sin(\omega_2 . t) \\ \cos(\omega_2 . t) \\ \\ \vdots \\ \\ \sin(\omega_{d/2} . t) \\ \cos(\omega_{d/2} . t) \end{bmatrix}_d$$

where $\omega_k = \frac{1}{10000^{2k/d}}$

Intuition:

0 :	0	0	0	0	8 :	1	0	0	0
1 :	0	0	0	1	9 :	1	0	0	1
2 :	0	0	1	0	10 :	1	0	1	0
3 :	0	0	1	1	11 :	1	0	1	1
4 :	0	1	0	0	12 :	1	1	0	0
5 :	0	1	0	1	13 :	1	1	0	1
6 :	0	1	1	0	14 :	1	1	1	0
7 :	0	1	1	1	15 :	1	1	1	1

Masked self-attention layer

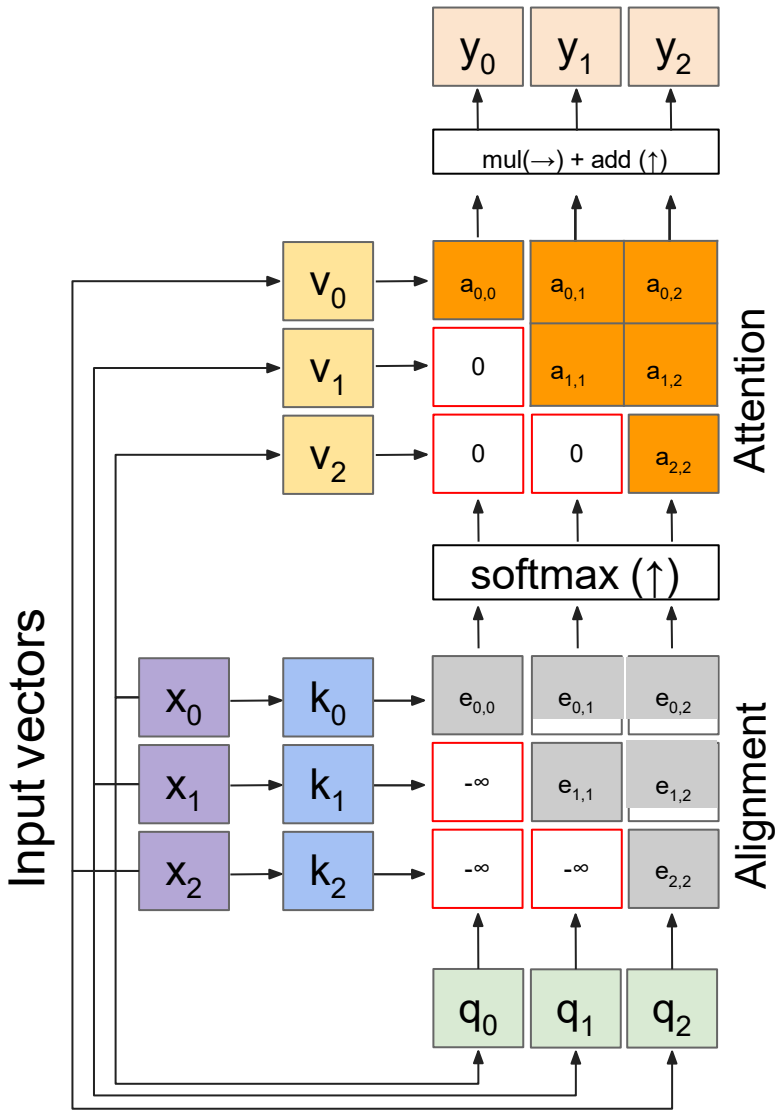

Outputs:
context vectors: **y** (shape: D_v)

Operations:
Key vectors: $\mathbf{k} = \mathbf{x}\mathbf{W}_k$
Value vectors: $\mathbf{v} = \mathbf{x}\mathbf{W}_v$
Query vectors: $\mathbf{q} = \mathbf{x}\mathbf{W}_q$
Alignment: $e_{i,j} = q_j \cdot k_i / \sqrt{D}$
Attention: $\mathbf{a} = \text{softmax}(\mathbf{e})$
Output: $y_j = \sum_i a_{i,j} v_i$

Inputs:
Input vectors: **x** (shape: N x D)

- Prevent vectors from looking at future vectors.
- Manually set alignment scores to -infinity

Multiple self-attention heads in parallel

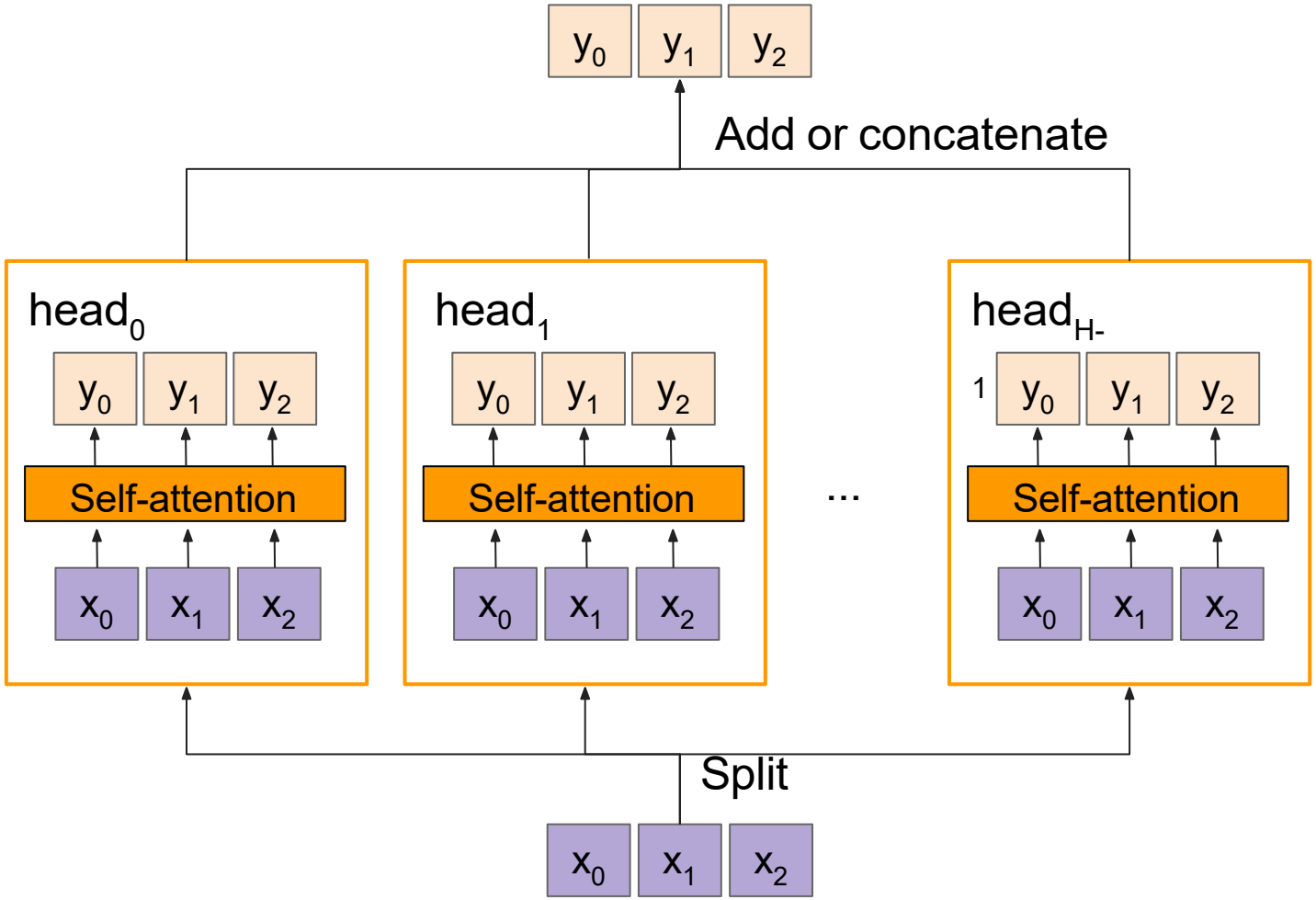

General attention versus self-attention

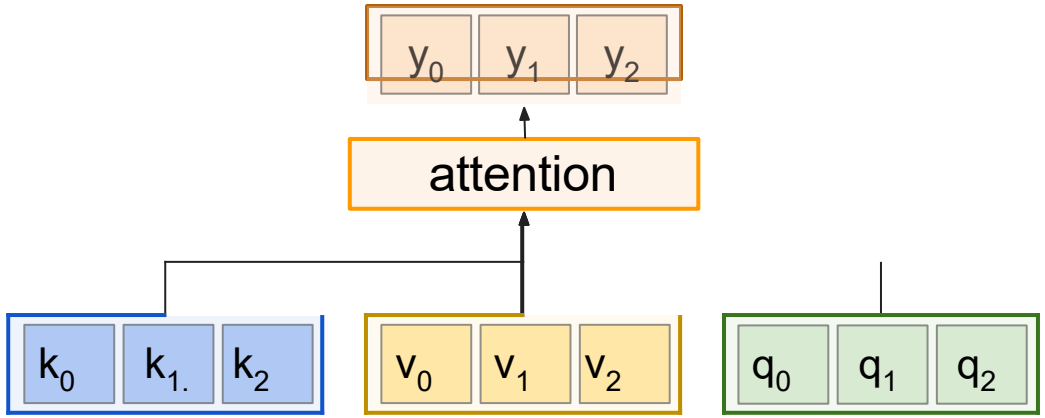

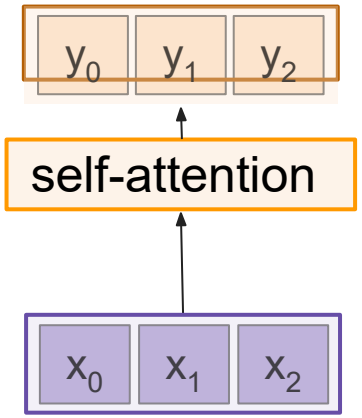

Comparing RNNs to Attention

- **RNNs**
- (+) LSTMs work reasonably well for long sequences.
- (-) Expects an ordered sequences of inputs
- (-) Sequential computation: subsequent hidden states can only be computed after the previous ones are done.

- **Attention**
- (+) Good at long sequences. Each attention calculation looks at all inputs.
- (+) Can operate over unordered sets or ordered sequences with positional encodings. (+) Parallel computation: All alignment and attention scores for all inputs can be done in parallel.
- (-) Requires a lot of memory: N x M alignment and attention scalers need to be calculated and stored for a single self-attention head. (but GPUs are getting bigger and better)

Transformers

Image Captioning using transformers

Input: Image **I**
Output: Sequence **y** = $y_1, y_2, \ldots, y_T$

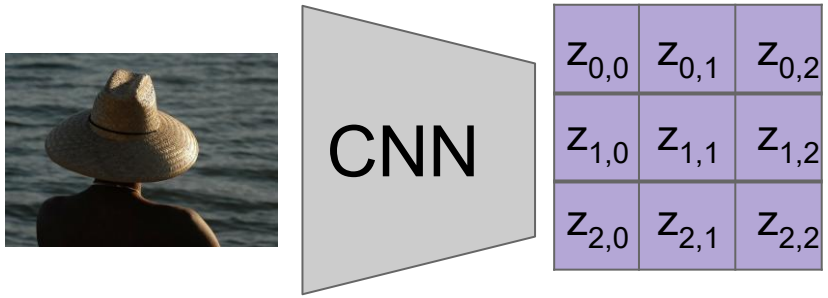

Extract spatial features from a pretrained CNN

Features: H x W x D

Image Captioning using transformers

Input: Image **I**
Output: Sequence **y** = $y_1, y_2, \ldots, y_T$

Encoder: **c** = $T_{\mathbf{w}}(\mathbf{z})$
where **z** is spatial CNN features
$T_{\mathbf{w}}(.)$ is the transformer encoder

Extract spatial features from a pretrained CNN

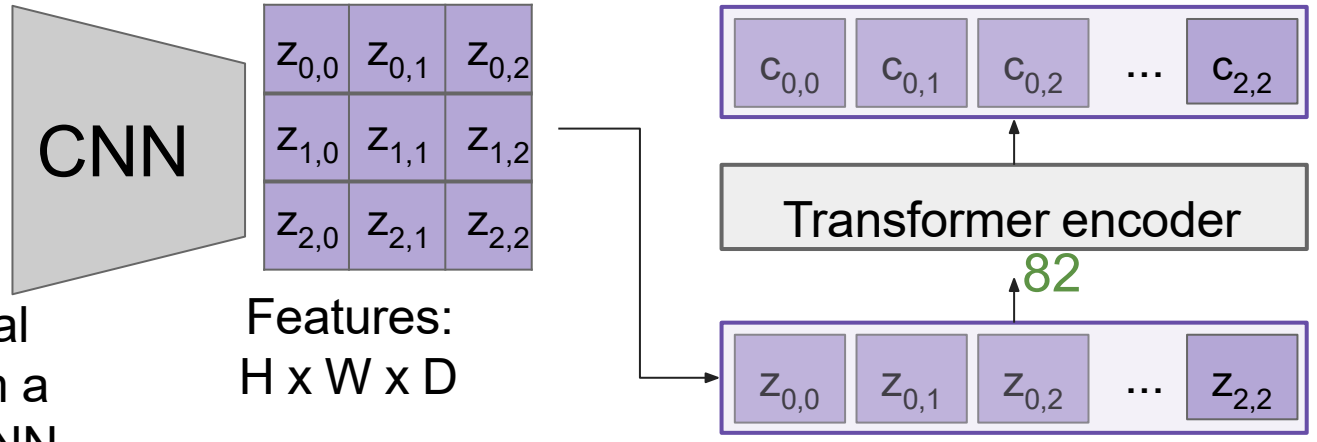

Image Captioning using transformers

Input: Image **I**
Output: Sequence $\mathbf{y} = y_1, y_2, \ldots, y_T$

Decoder: $y_t = T_D(\mathbf{y}_{0:t-1}, \mathbf{c})$
where $T_D(.)$ is the transformer decoder

Encoder: $\mathbf{c} = T_W(\mathbf{z})$
where **z** is spatial CNN features
$T_W(.)$ is the transformer encoder

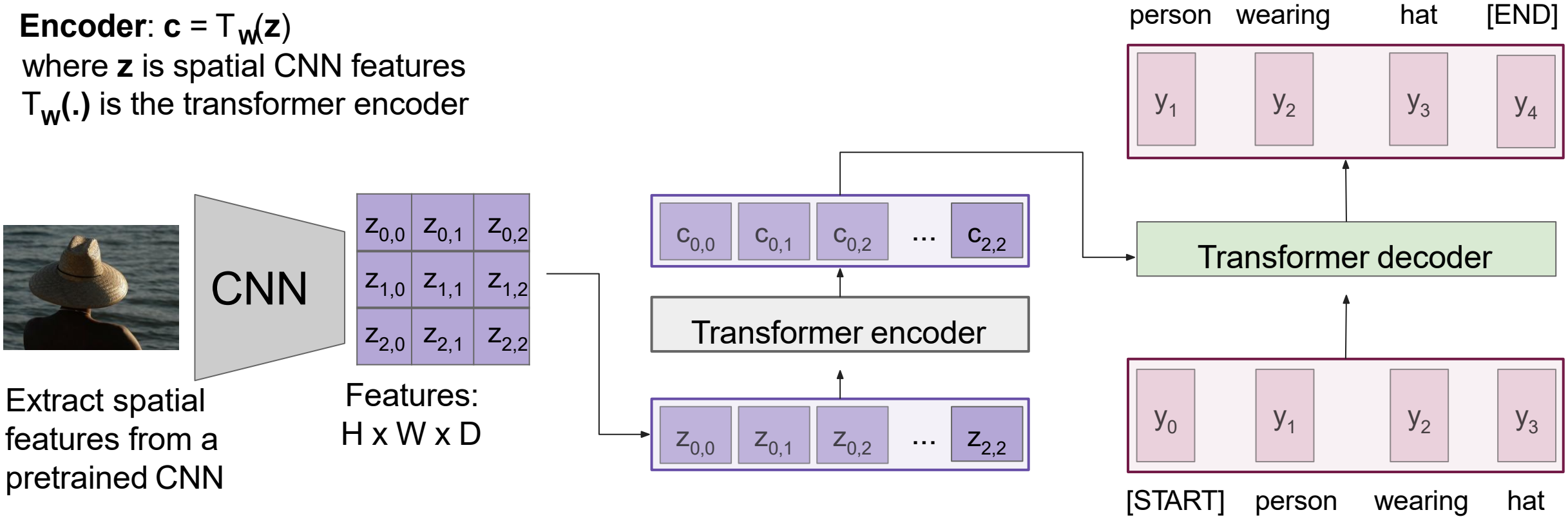

The Transformer encoder block

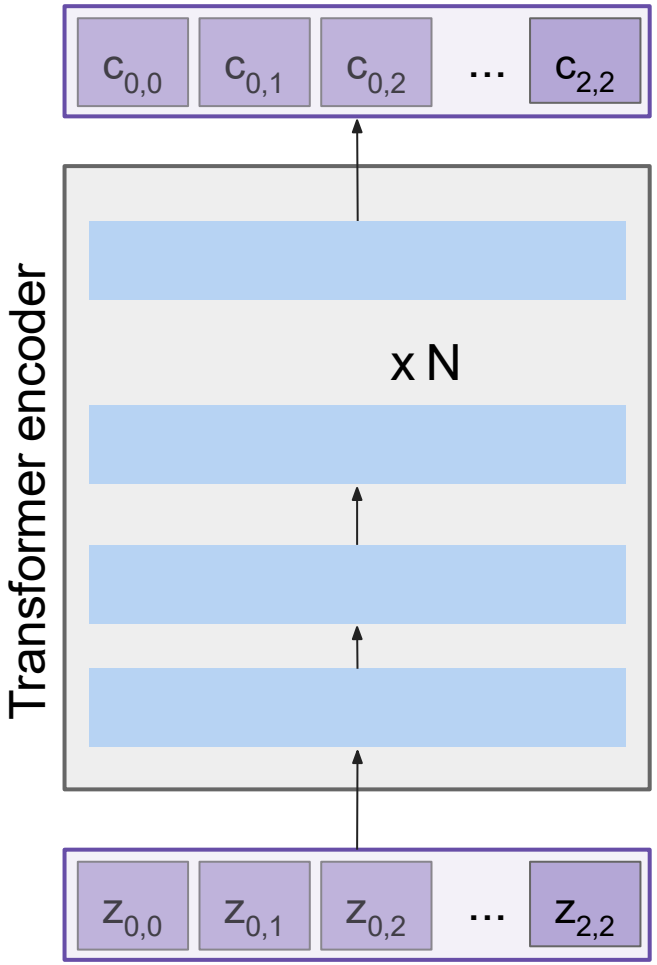

Made up of N encoder blocks.

In vaswani et al. $N = 6$, $D_q = 512$

The Transformer encoder block

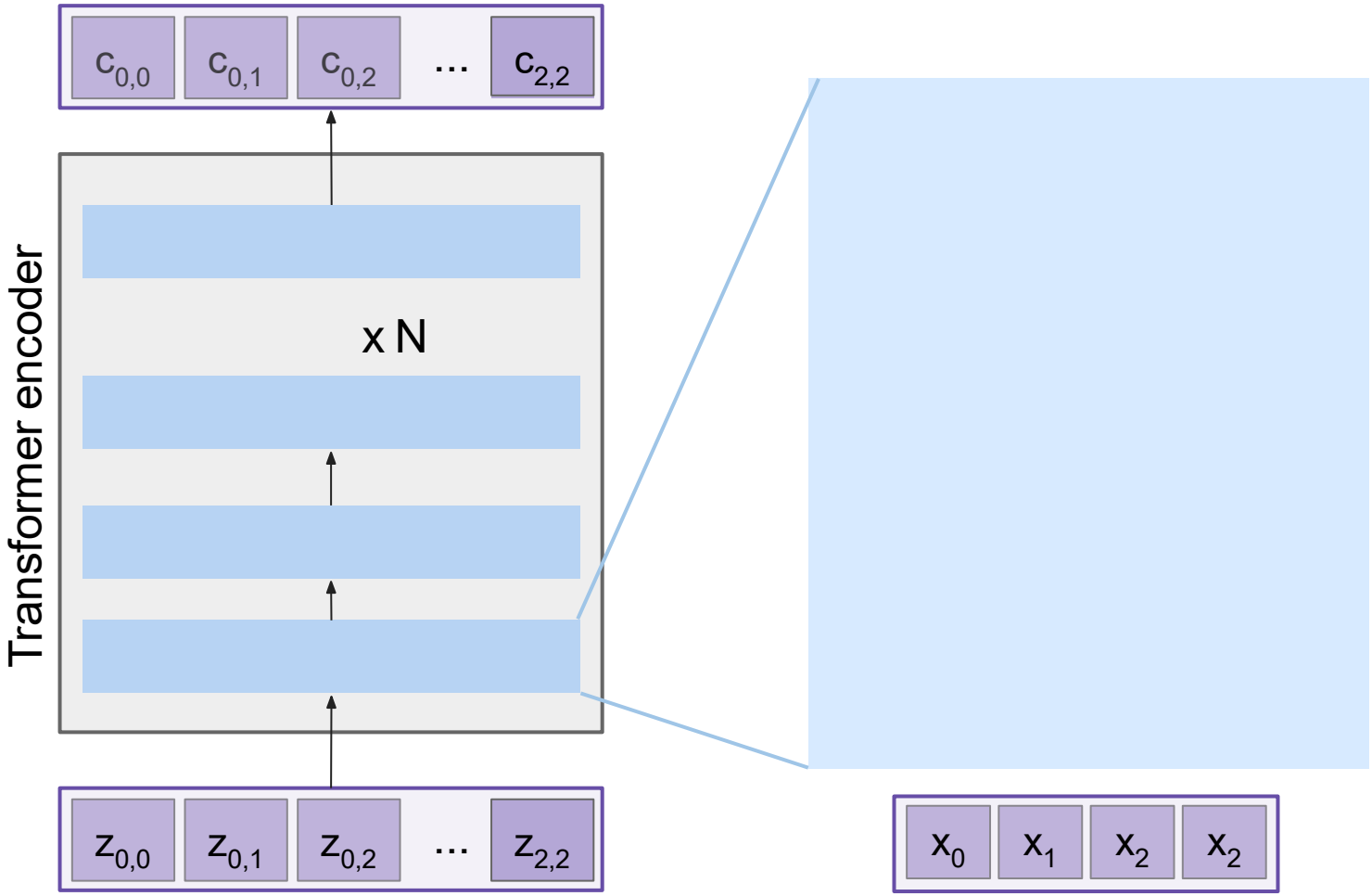

Let's dive into one encoder block

The Transformer encoder block

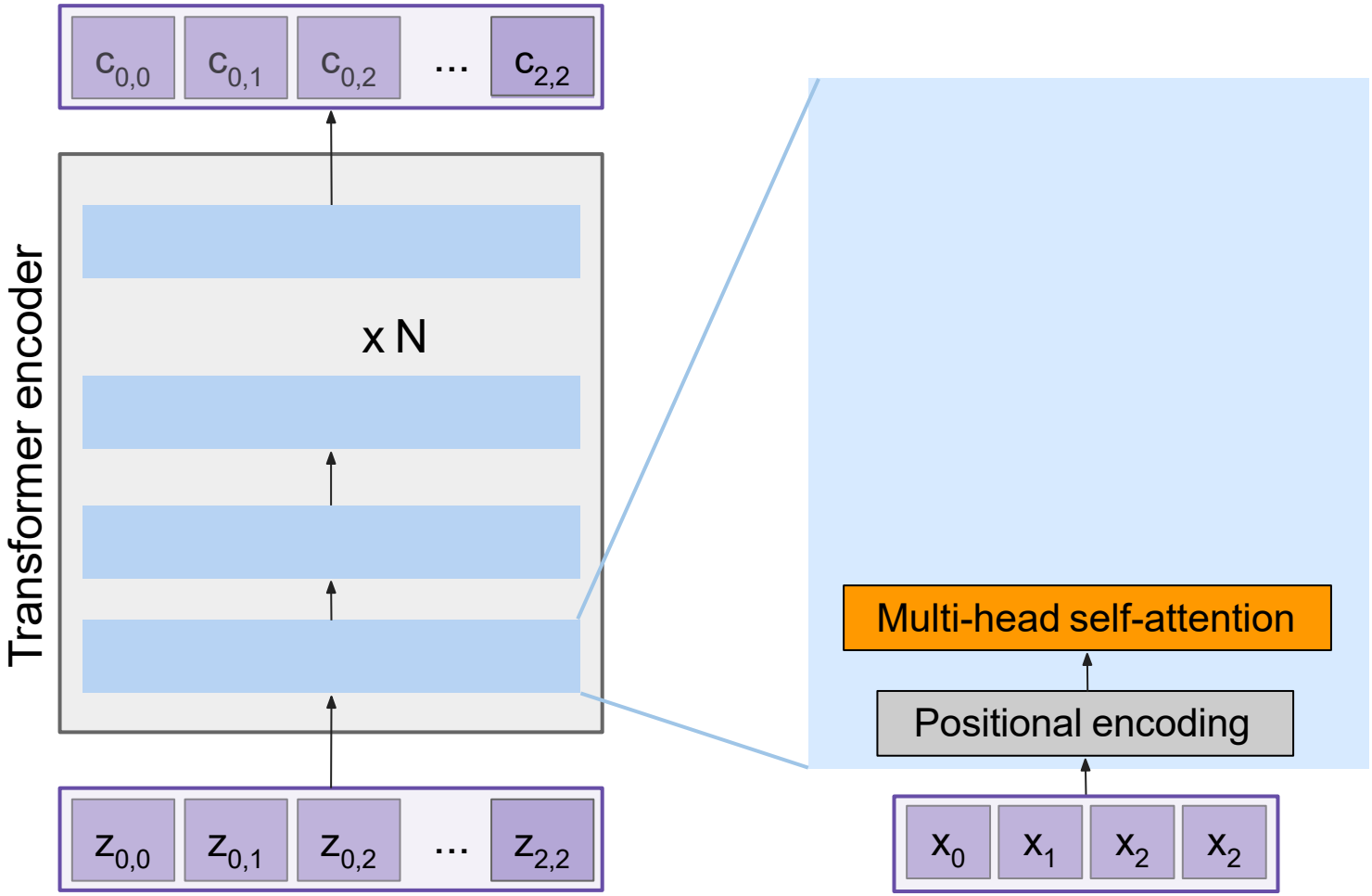

Attention attends over all the vectors

Add positional encoding

The Transformer encoder block

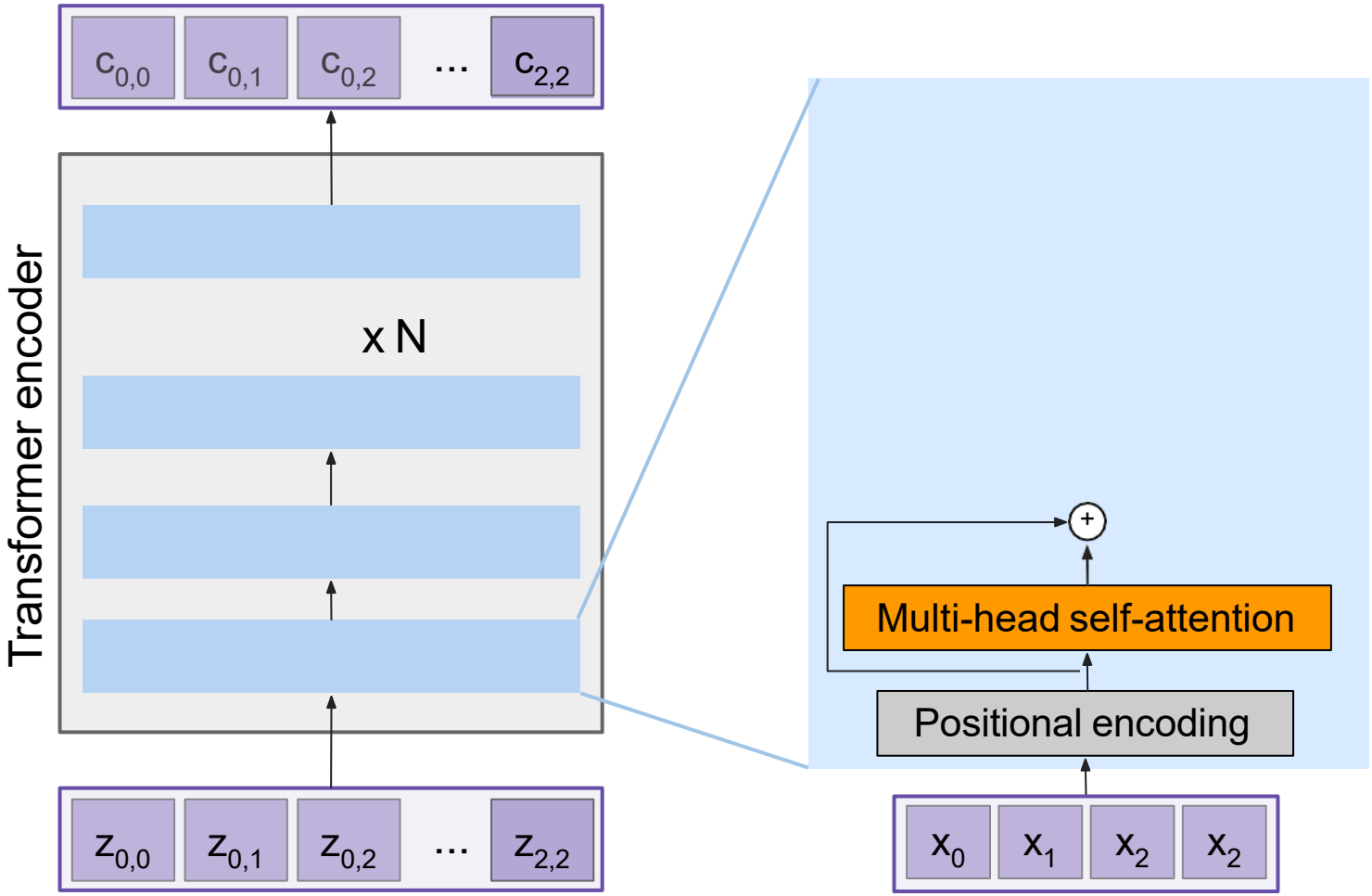

Residual connection

Attention attends over all the vectors

Add positional encoding

The Transformer encoder block

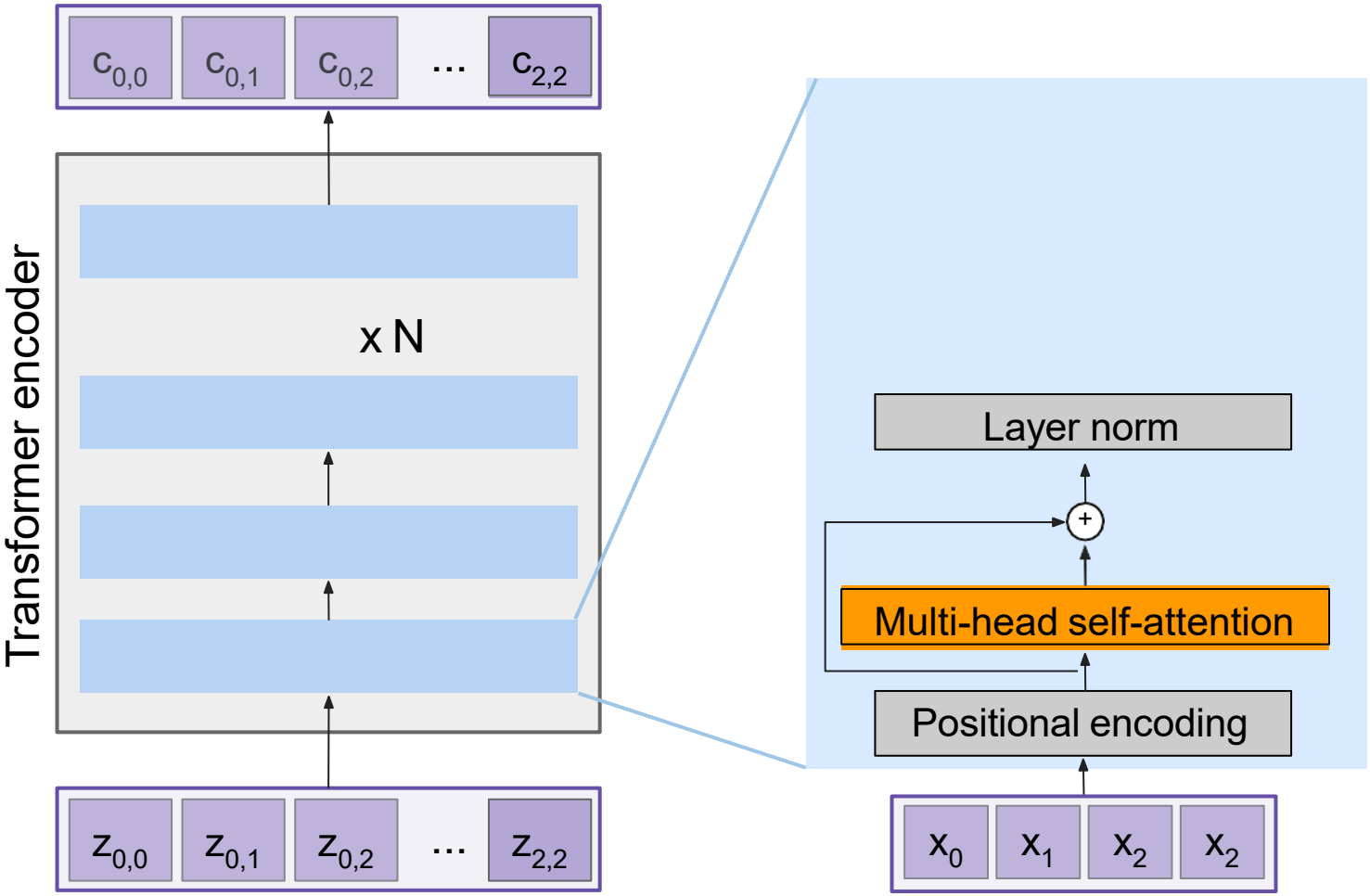

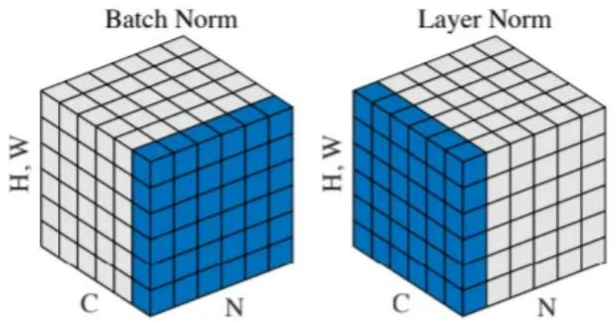

LayerNorm over each vector individually

Residual connection

Attention attends over all the vectors

Add positional encoding

The Transformer encoder block

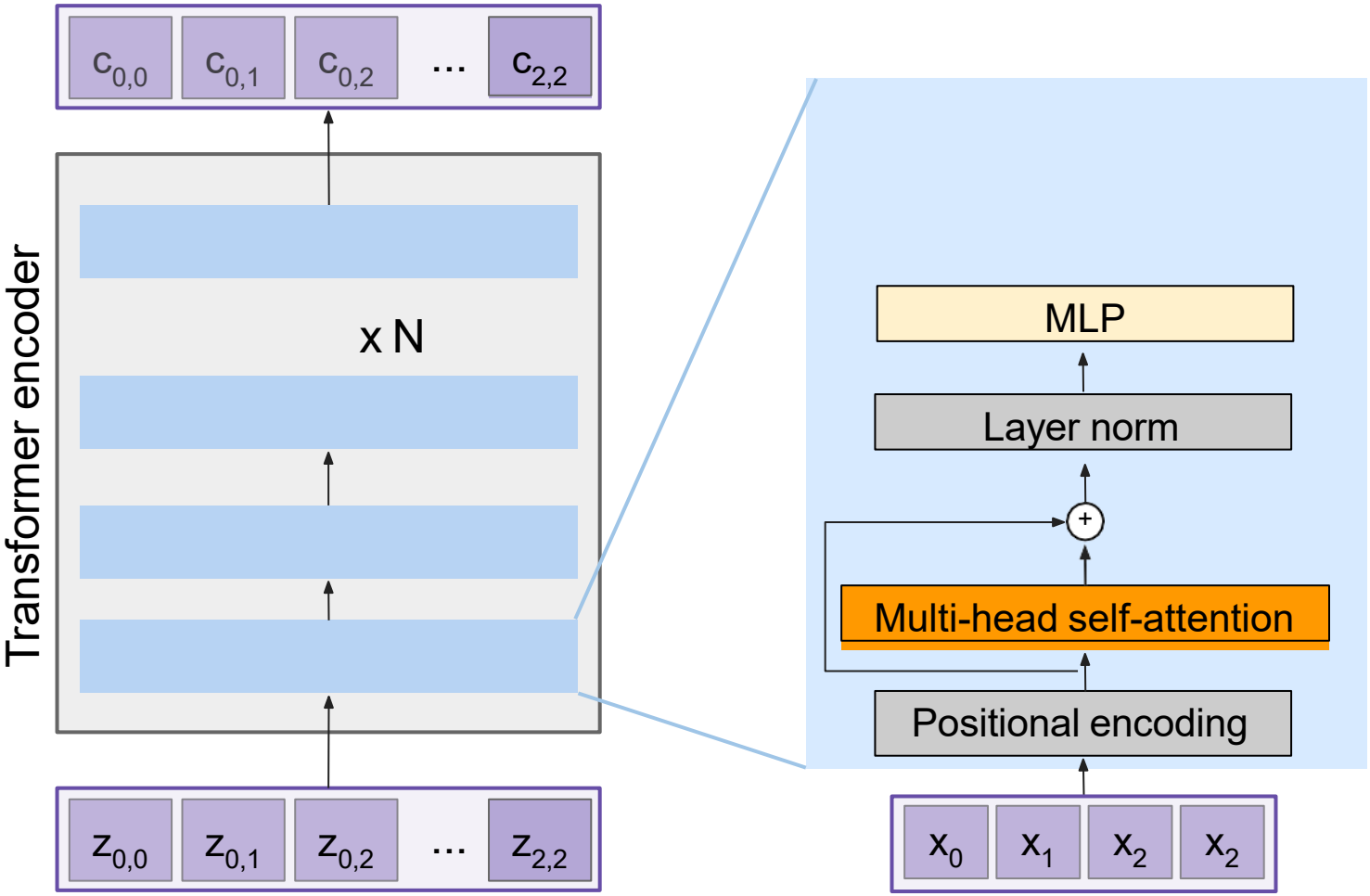

MLP over each vector individually

LayerNorm over each vector individually

Residual connection

Attention attends over all the vectors

Add positional encoding

The Transformer encoder block

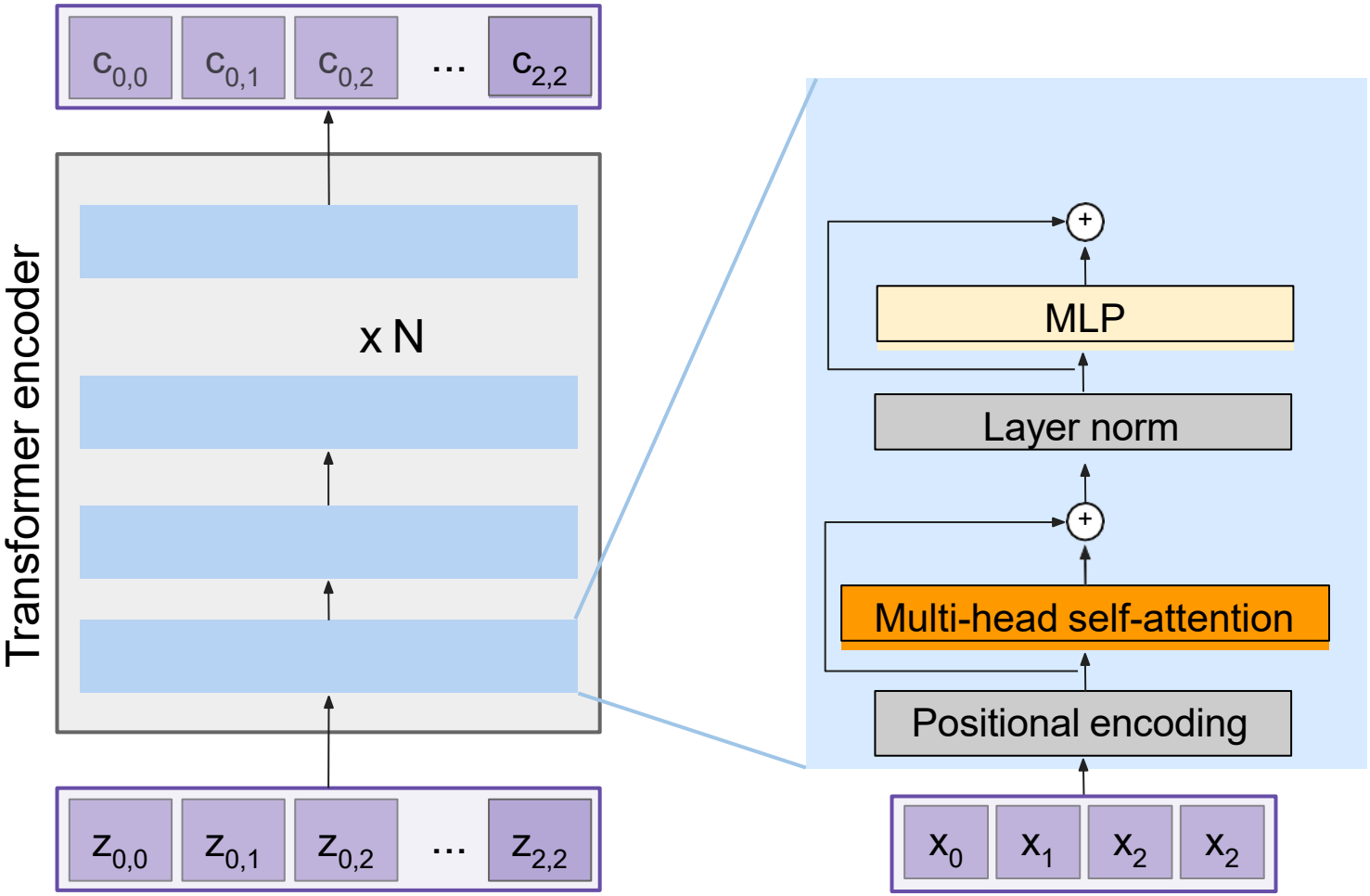

Residual connection

MLP over each vector individually

LayerNorm over each vector individually

Residual connection

Attention attends over all the vectors

Add positional encoding

The Transformer encoder block

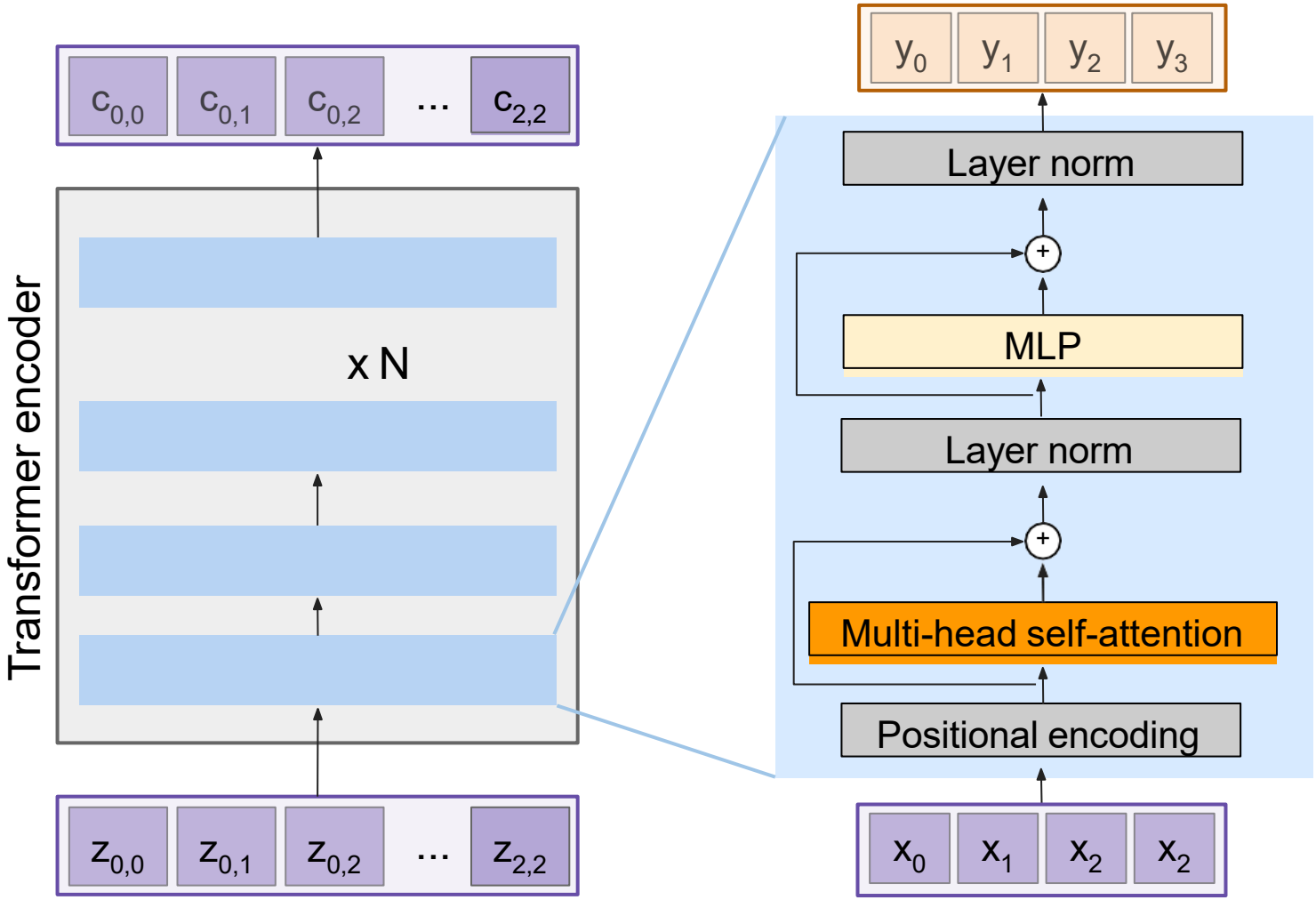

Transformer Encoder Block:

Inputs: Set of vectors **x**
Outputs: Set of vectors **y**

Self-attention is the only interaction between vectors.

Layer norm and MLP operate independently per vector.

Highly scalable, highly parallelizable, but high memory usage.

The Transformer Decoder block

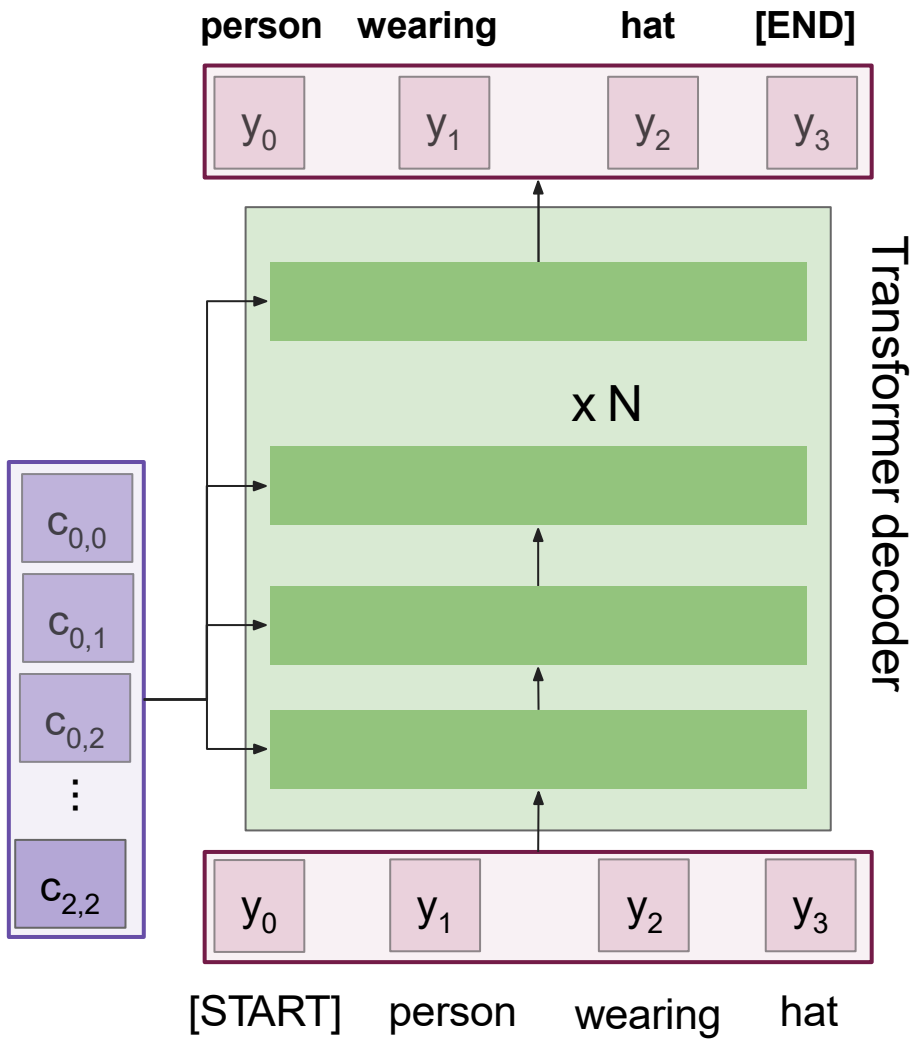

Made up of N decoder blocks.

In vaswani et al. N = 6, D_q= 512

The Transformer Decoder block

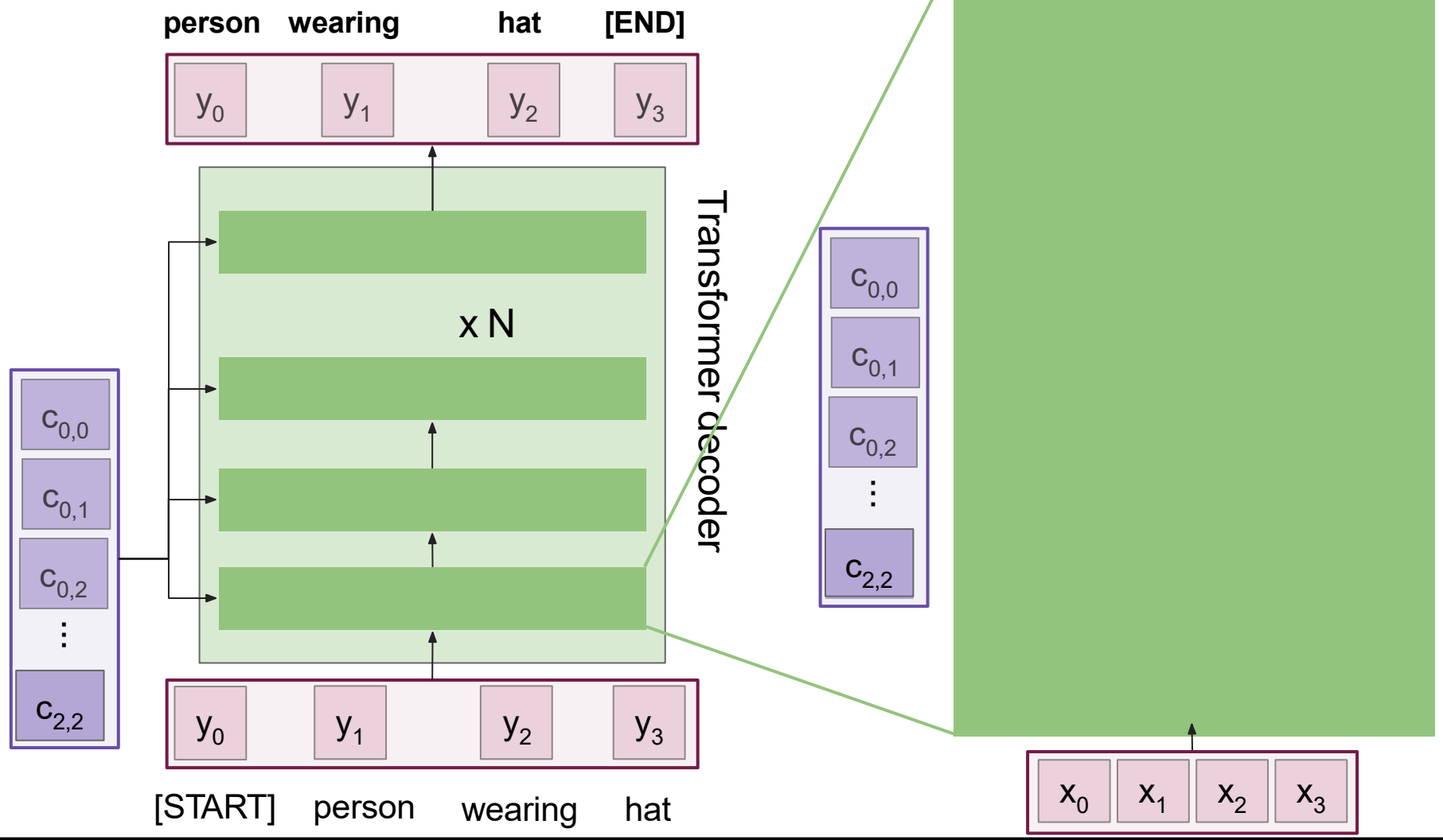

Let's dive into the transformer decoder block

The Transformer Decoder block

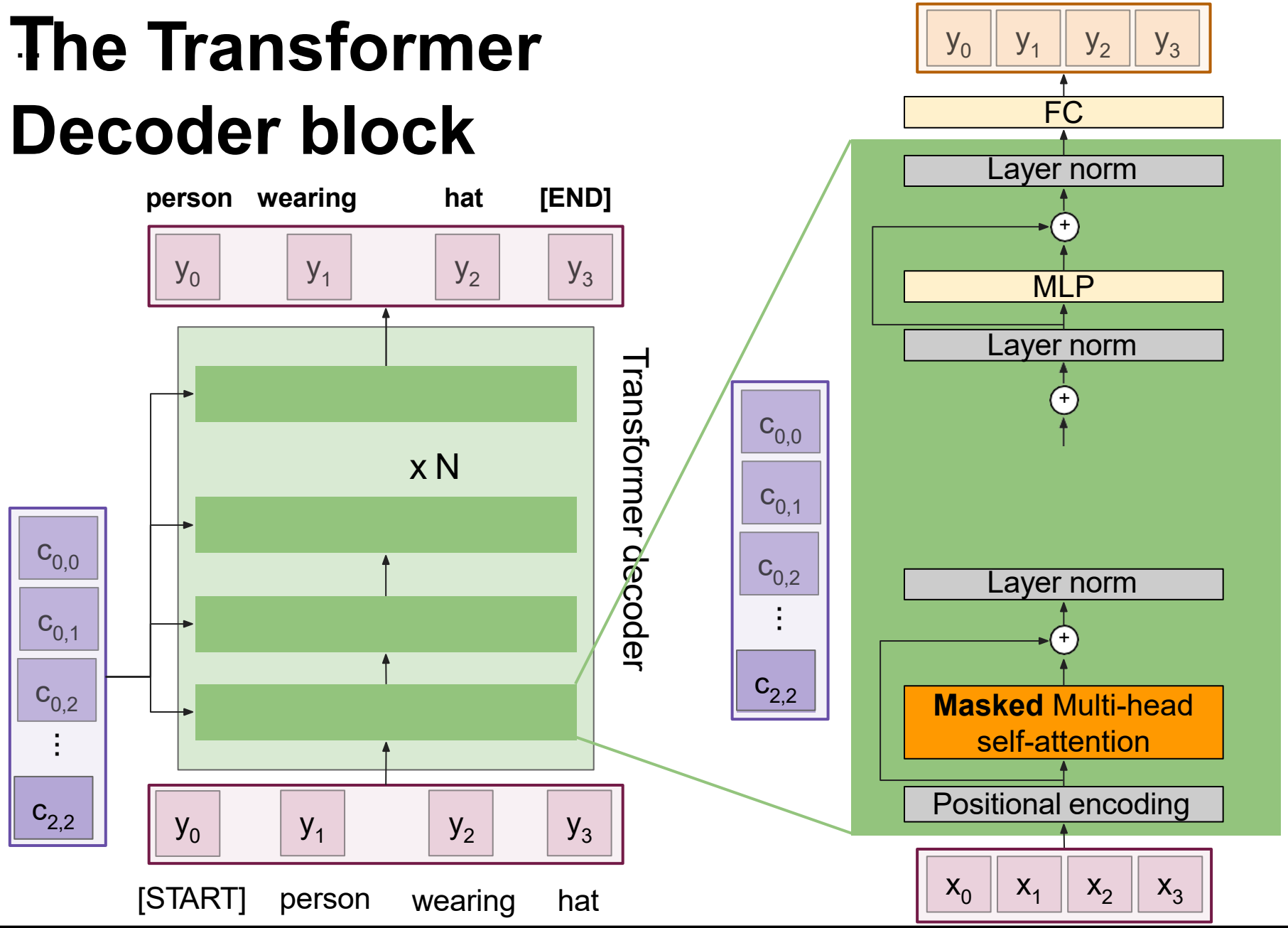

Most of the network is the same the transformer encoder.

The Transformer Decoder block

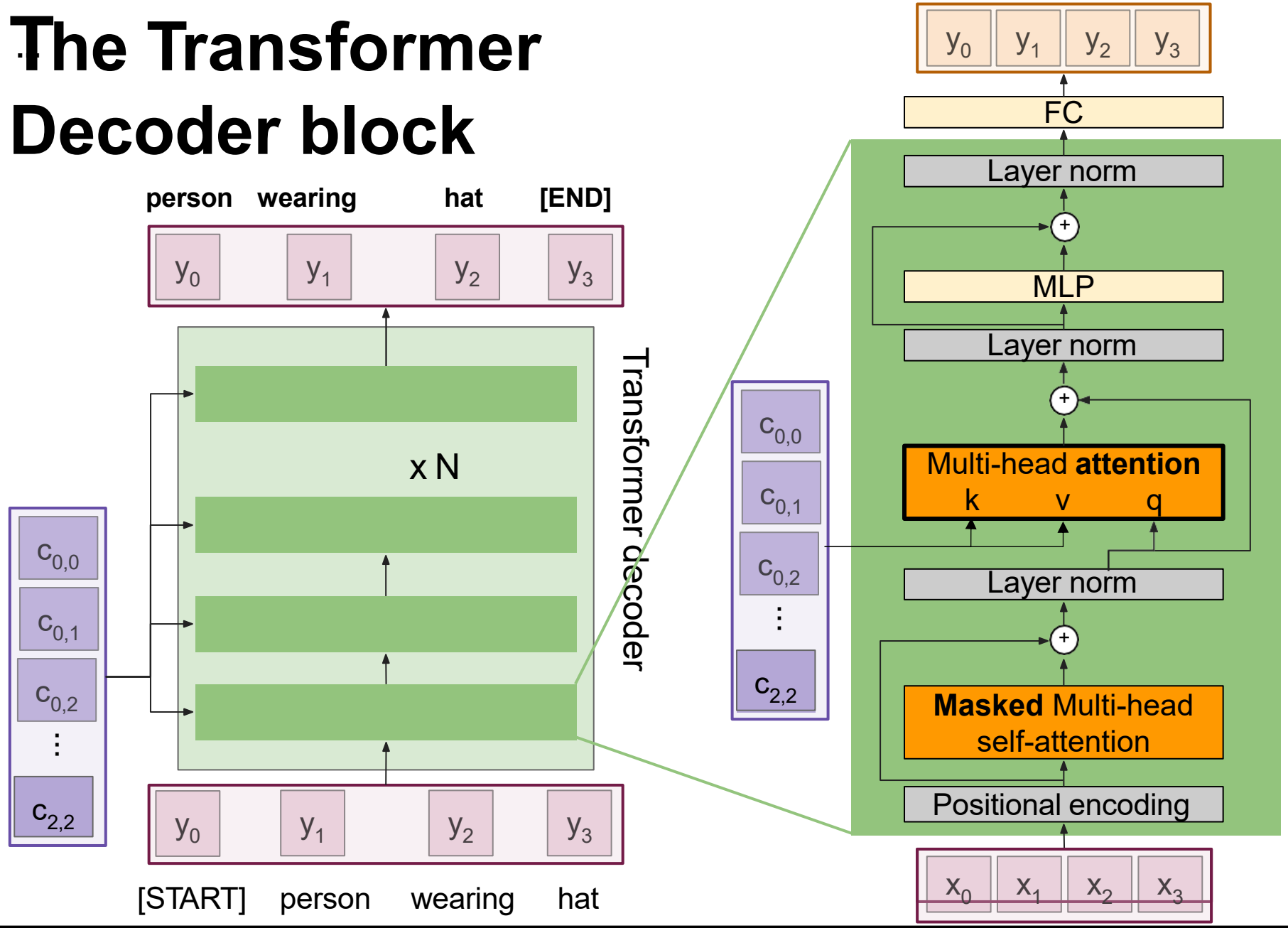

Multi-head attention block attends over the transformer encoder outputs.

For image captions, this is how we inject image features into the decoder.

The Transformer Decoder block

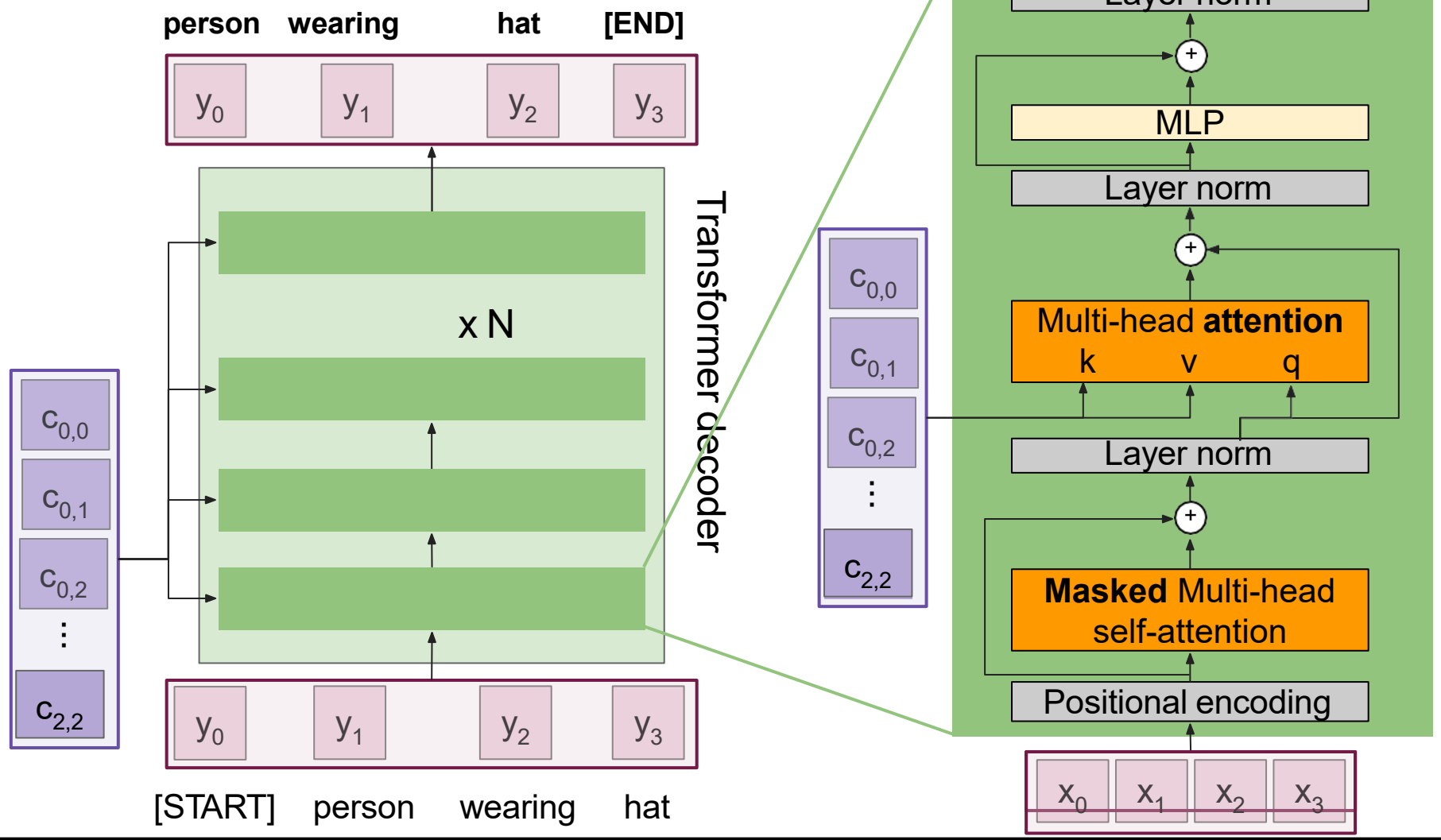

Transformer Decoder Block:

Inputs: Set of vectors **x** and Set of context vectors **c.**
Outputs: Set of vectors **y.**

Masked Self-attention only interacts with past inputs.

Multi-head attention block is NOT self-attention. It attends over encoder outputs.

Highly scalable, highly parallelizable, but high memory usage.

Image Captioning using transformers

- **No recurrence at all**

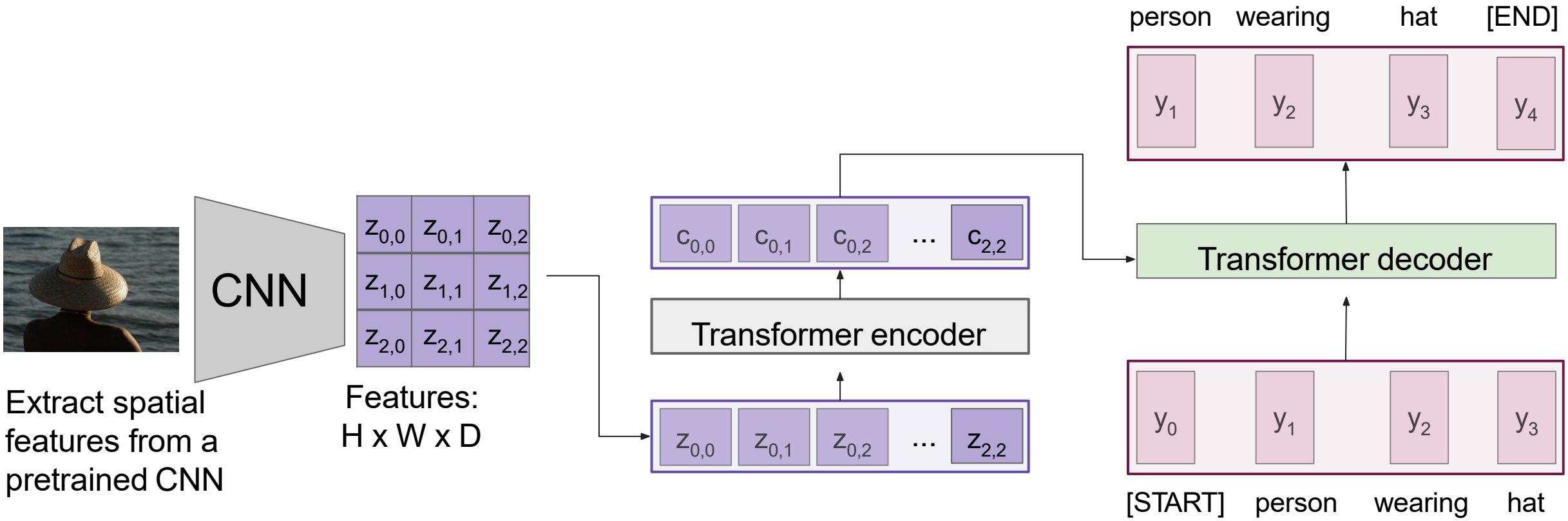

Image Captioning using transformers

- **Perhaps we don't need convolutions at all?**

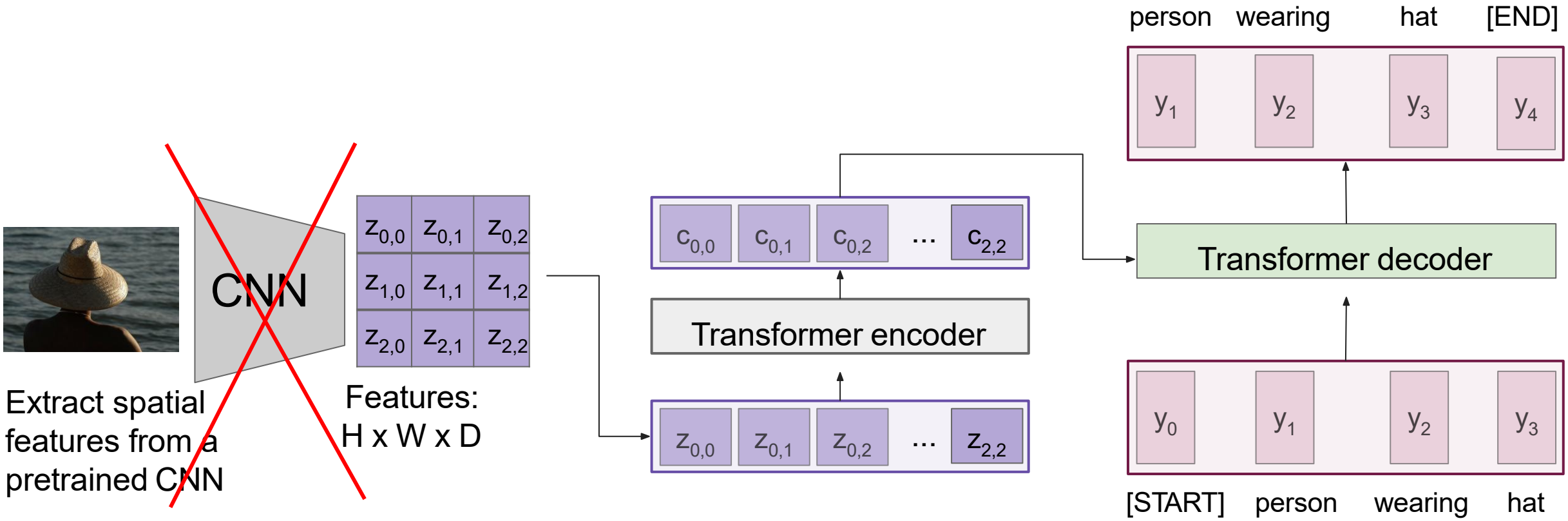

Image Captioning using ONLY transformers

- **Transformers from pixels to language**

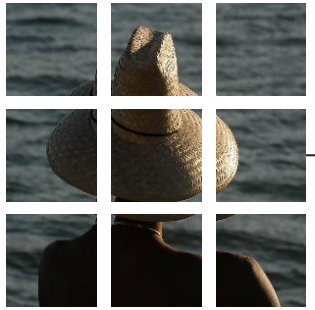

Fei-Fei Li, Ranjay Krishna, Danfei Xu

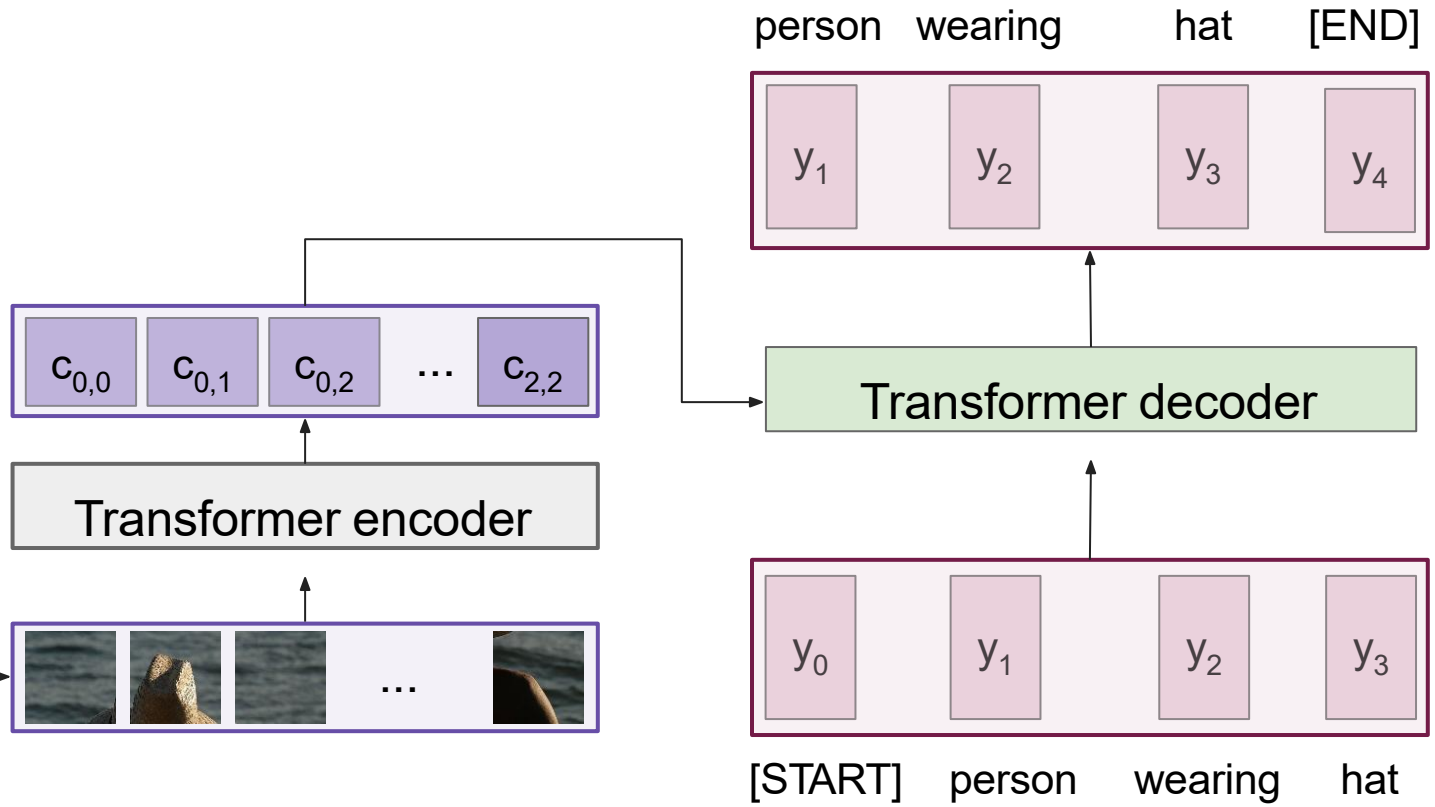

Image Captioning using ONLY transformers

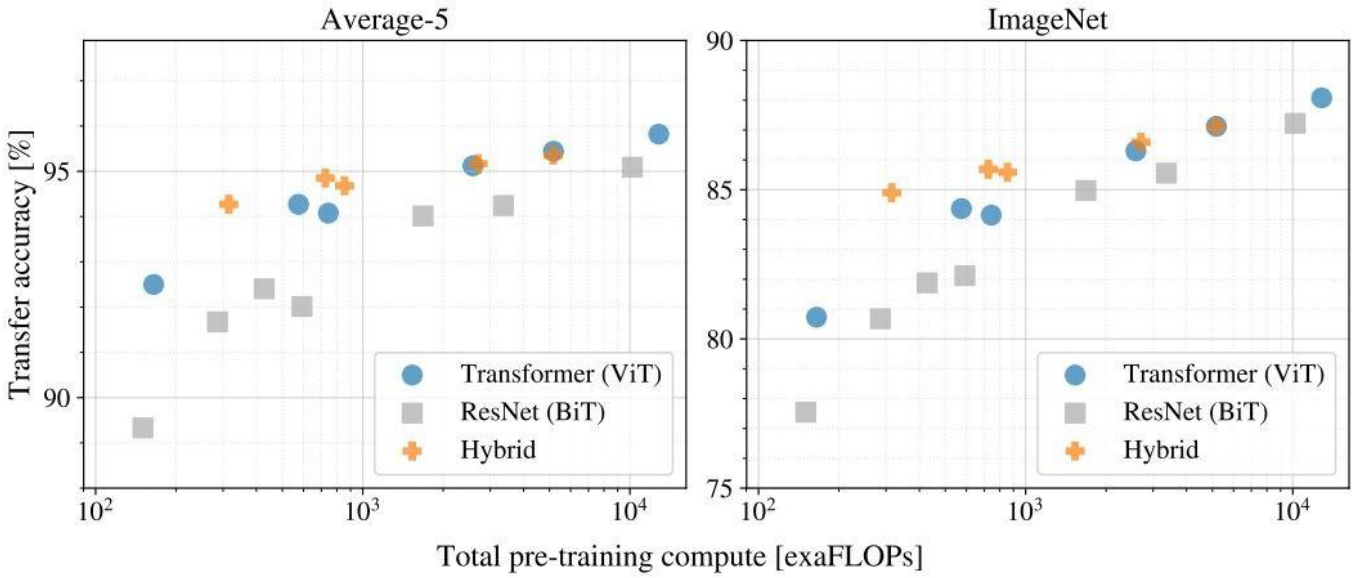

Figure 5: Performance versus cost for different architectures: Vision Transformers, ResNets, and hybrids. Vision Transformers generally outperform ResNets with the same computational budget. Hybrids improve upon pure Transformers for smaller model sizes, but the gap vanishes for larger models.

New large-scale transformer models

TEXT PROMPT

an illustration of a baby daikon radish in a tutu walking a dog

AI-GENERATED IMAGES

Edit prompt or view more images ↓

TEXT PROMPT

an armchair in the shape of an avocado [...]

AI-GENERATED IMAGES

Edit prompt or view more images ↓

link to more examples

Summary

- Adding attention to RNNs allows them to "attend" to different parts of the input at every time step
- The general attention layer is a new type of layer that can be used to design new neural network architectures
- Transformers are a type of layer that uses self-attention and layer norm.
  - It is highly scalable and highly parallelizable
  - Faster training, larger models, better performance across vision and language tasks
  - They are quickly replacing RNNs, LSTMs, and may even replace convolutions.

References

- Stanford CS231n
- Dr. Hafiz Khan