KENNESAW STATE UNIVERSITY

# CS 4277

# Large-Scale Distributed Training

Dr. Chen Zhao

czhao4@kennesaw.edu

Computer Science

College of Computing and Software Engineering

# Learning Objectives

- Inside a GPU
  - Example with NVIDIA H100
- How to train on lots of GPUs
  - Data Parallelism (DP): Split on $Batch$ dimension
  - Context Parallelism (CP): Split on $Sequence$ dimension
  - Pipeline Parallelism (PP): Split on $L$ dimension
  - Tensor Parallelism (TP): Split on $Dim$ dimension

# GPUs and How to Train On Them

A bit about GPU hardware

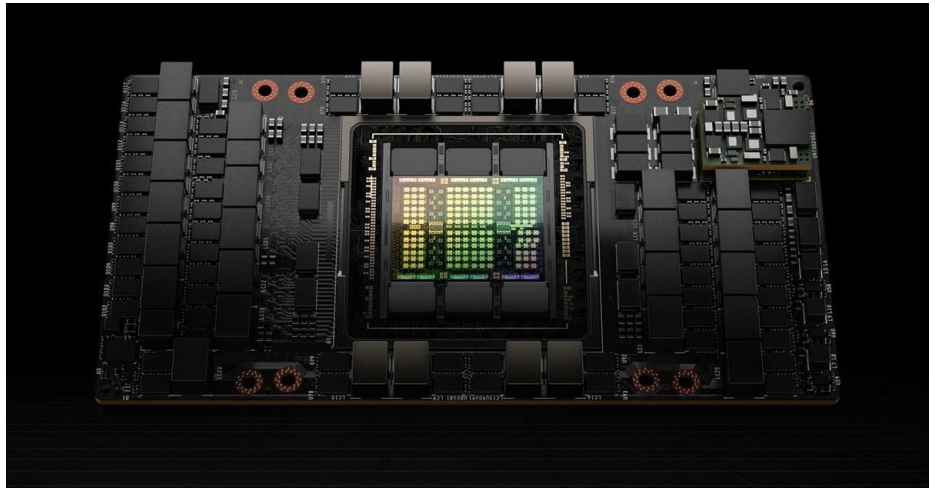

How to train on lots of GPUs

# Inside a GPU

# Inside a GPU: NVIDIA H100

- GPU = Graphics Processing Unit
- Originally for graphics
- Now a general parallel processor
- Compute cores
- 80 GB of HBM Memory
- 3352 GB/sec bandwidth to cores

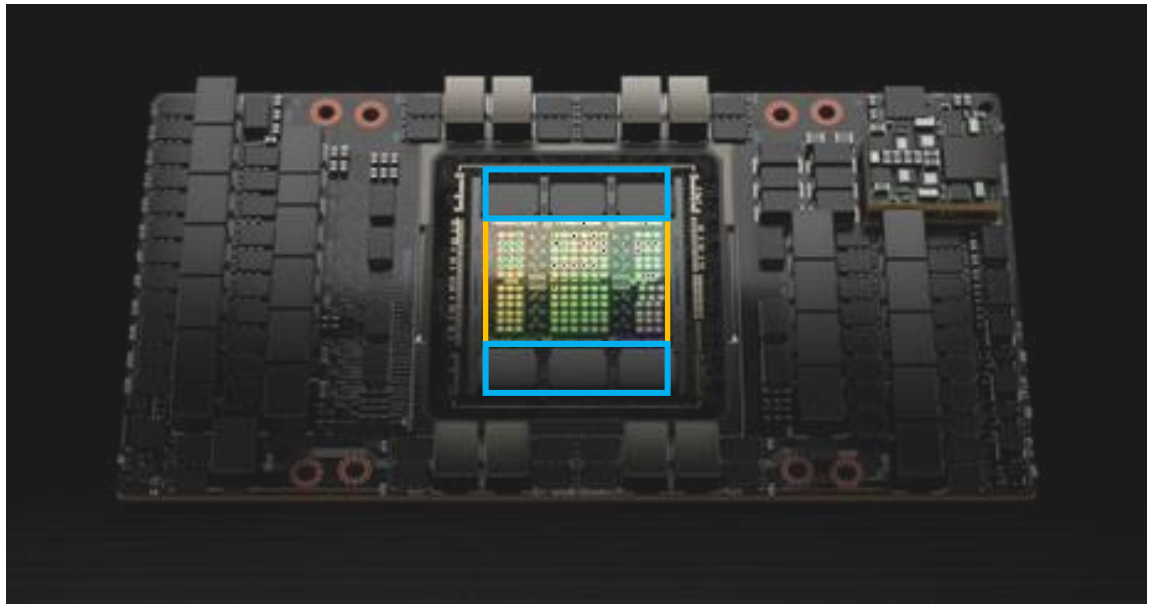

# Inside a GPU: NVIDIA H100

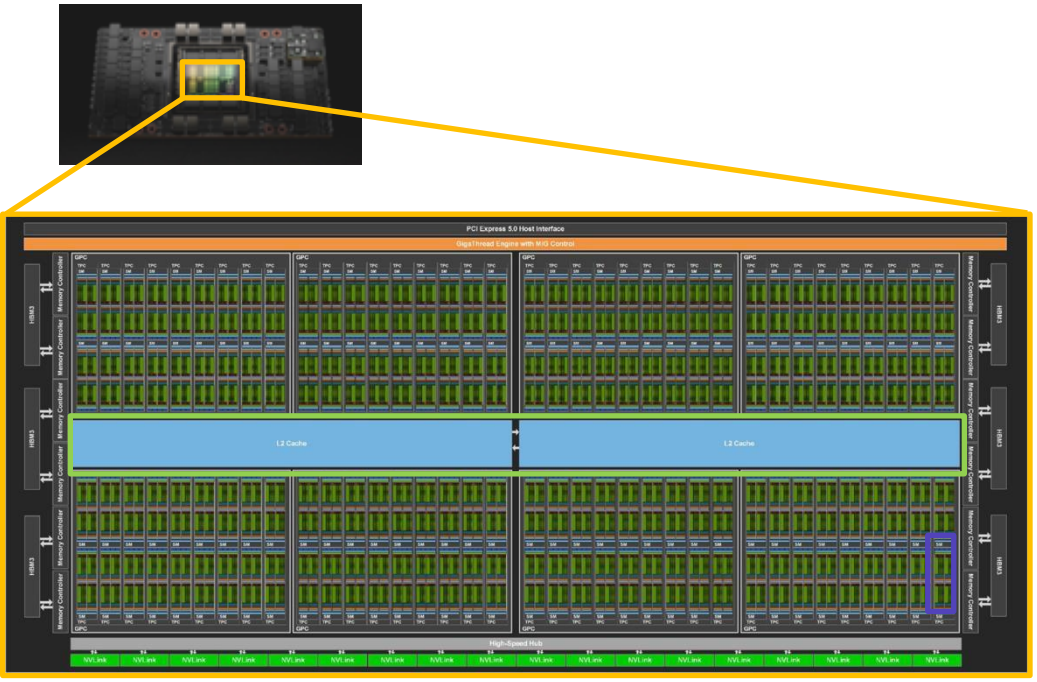


- H100 Compute Cores
- 50MB of L2 Cache
- 144 Streaming Multiprocessors (SMs)
- These are independent parallel cores

# Inside a GPU: NVIDIA H100

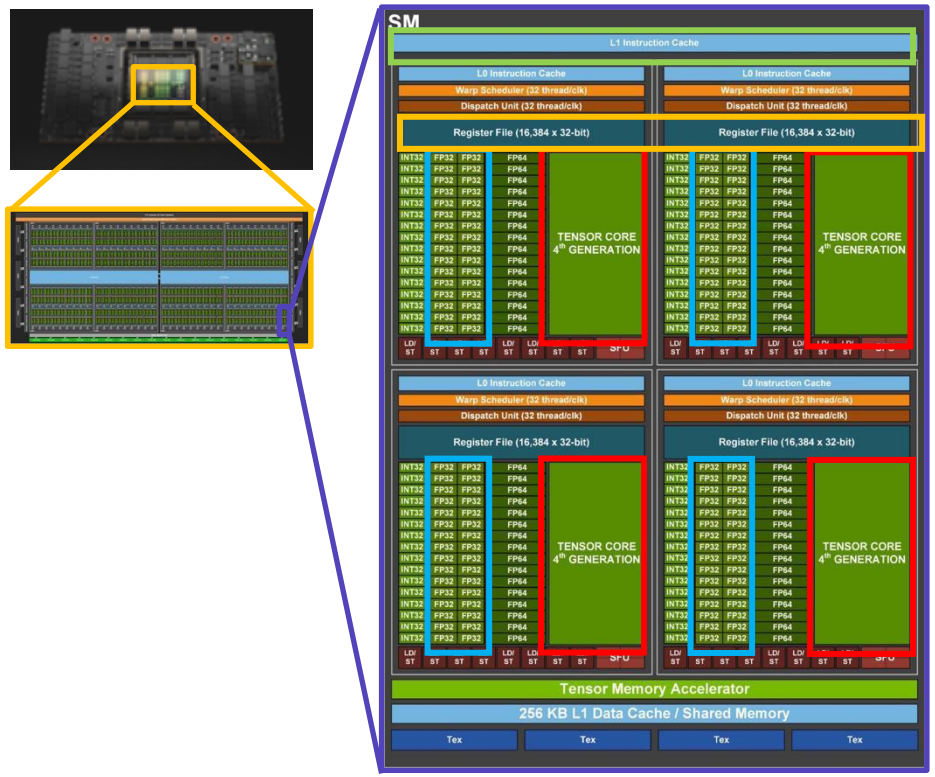


- H100 Streaming Multiprocessor
- 256 KB **L1 cache**, **256 KB registers**
- 128 FP32 Cores
  - Computes a*x + b per clock cycle
  - 2 FLOPs = Floating Point Operations
  - 256 FLOP/cycle per SM
- 4 Tensor Cores
  - Computes AX + B per clock cycle
    Matrix operation: [16x4][4x8] + [16x8]
    16*4*8*2 = 1024 FLOPs
  - 4096 FLOP/cycle per SM
  - Mixed precision: 16-bit / 32-bit

# GPUs Have Gotten Much Faster!

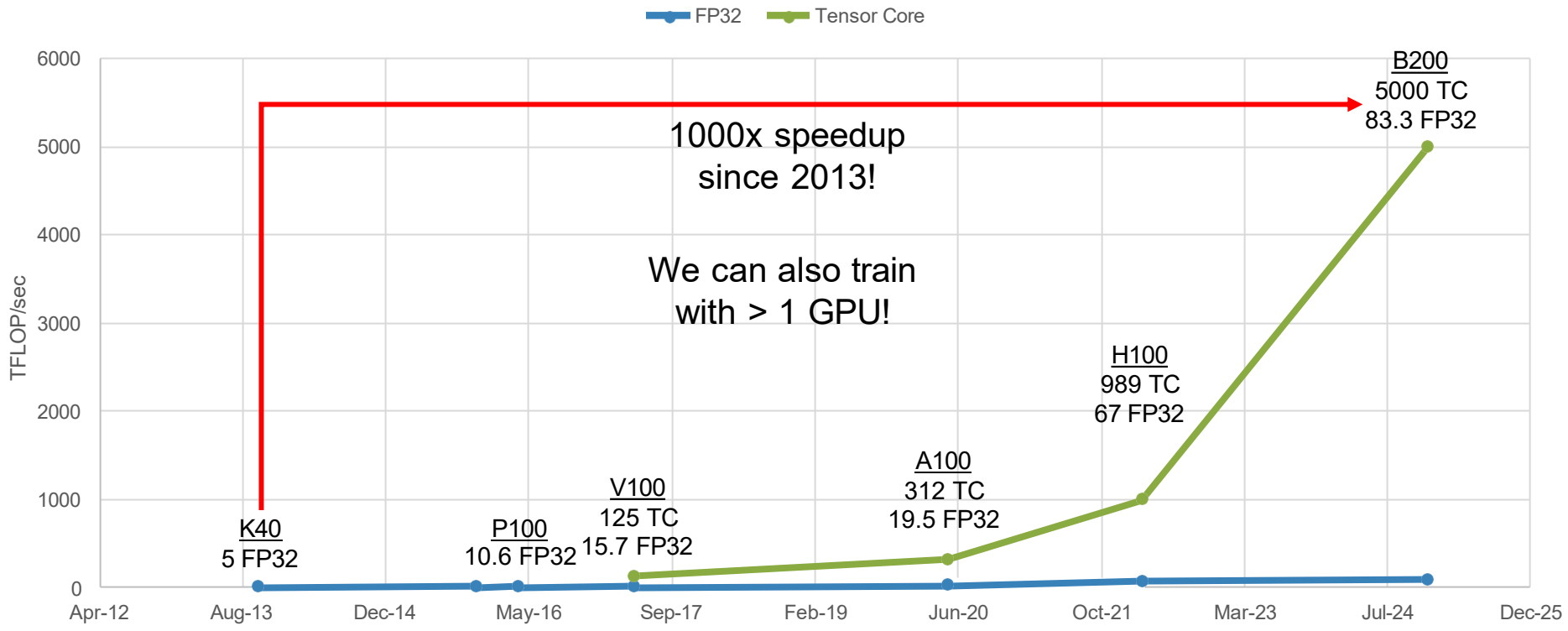

# NVIDIA H100 GPU

- **H100 GPU**: 3352 GB/sec inside the GPU
- **Server** = 8x GPU: 900 GB/sec between GPUs

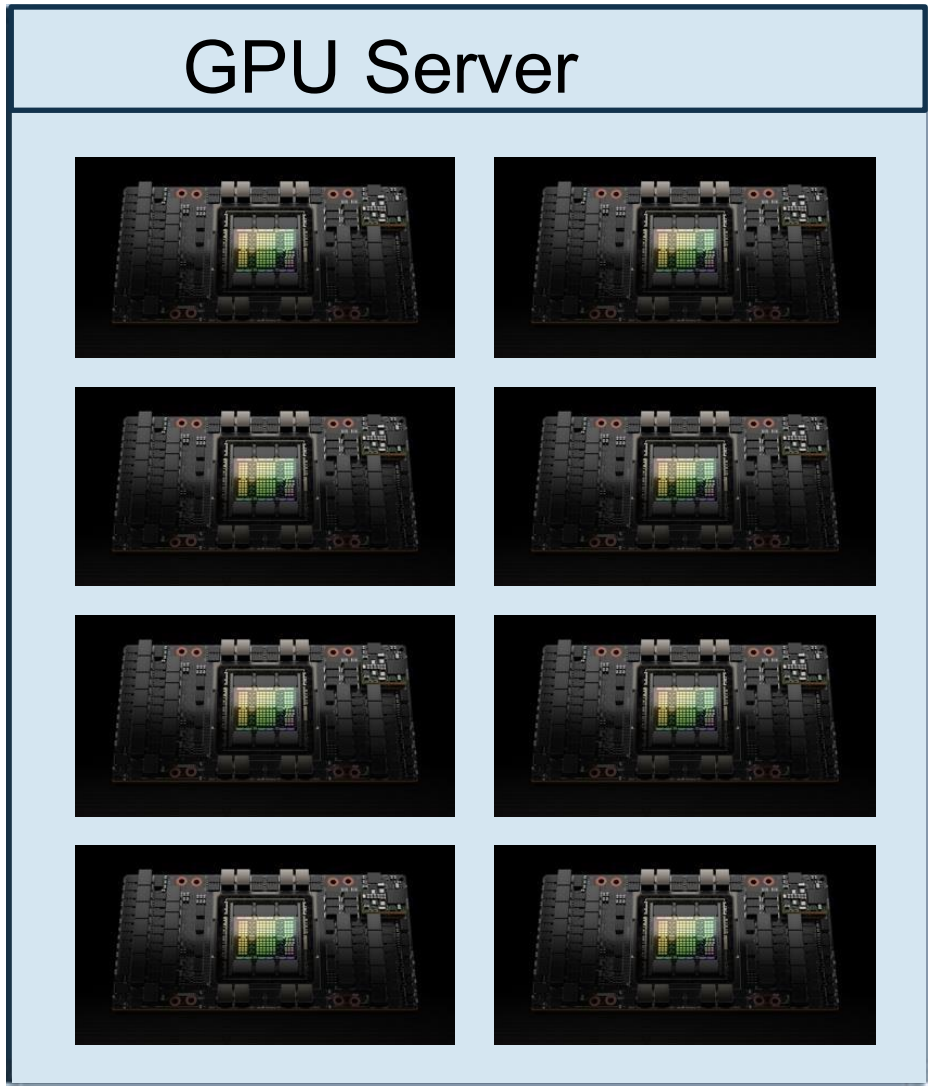

# Case Study: Meta's Llama3 Cluster

- **H100 GPU**: 3352 GB/sec inside the GPU
- **Server** = 8x GPU: 900 GB/sec between GPUs
- **Rack** = 2 Servers = 16x GPU

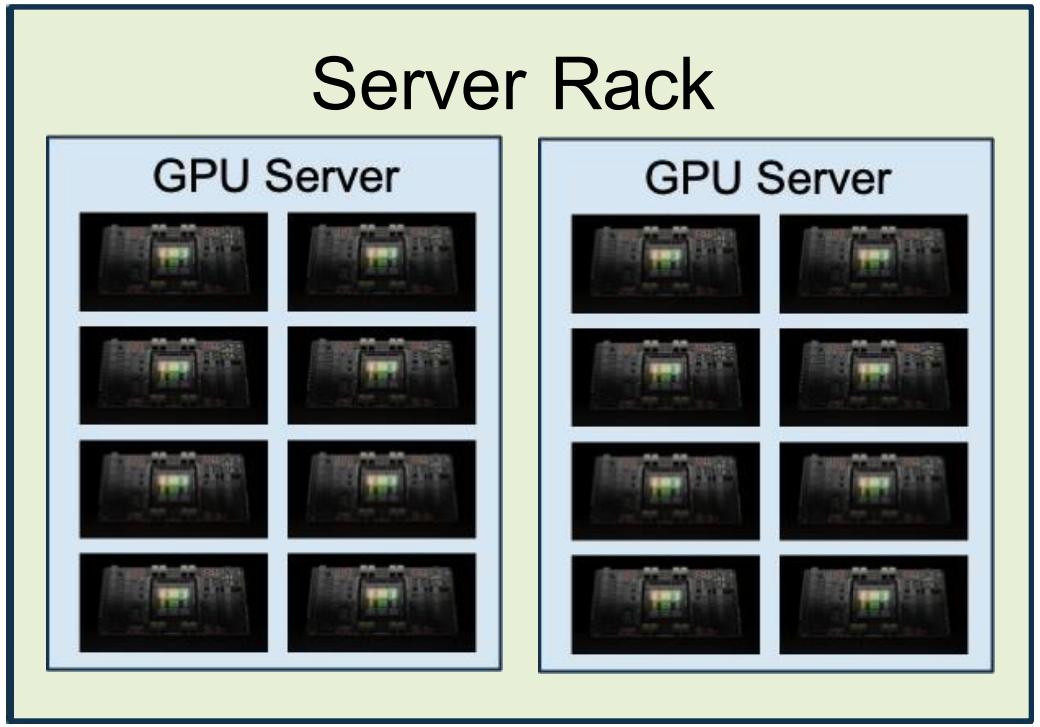

# Case Study: Meta's Llama3 Cluster

- **H100 GPU**: 3352 GB/sec inside the GPU
- **Server** = 8x GPU: 900 GB/sec between GPUs
- **Rack** = 2 Servers = 16x GPU
- **Pod** = 192 Racks = 3072 GPUs
  - 50 GB/sec between GPUs

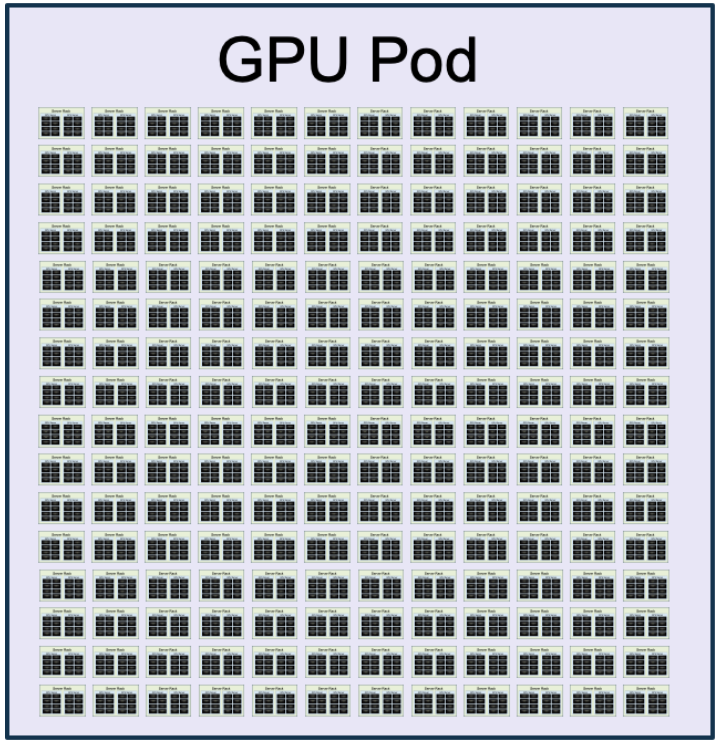


Llama Team, "The Llama 3 Herd of Models", LLama

# Case Study: Meta's Llama3 Cluster

- **H100 GPU**: 3352 GB/sec inside the GPU
- **Server** = 8x GPU: 900 GB/sec between GPUs
- **Rack** = 2 Servers = 16x GPU
- **Pod** = 192 Racks = 3072 GPUs
  - 50 GB/sec between GPUs
- **Cluster** = 8 Pods = 24,576 GPUs
  - < 50GB/sec between GPUs

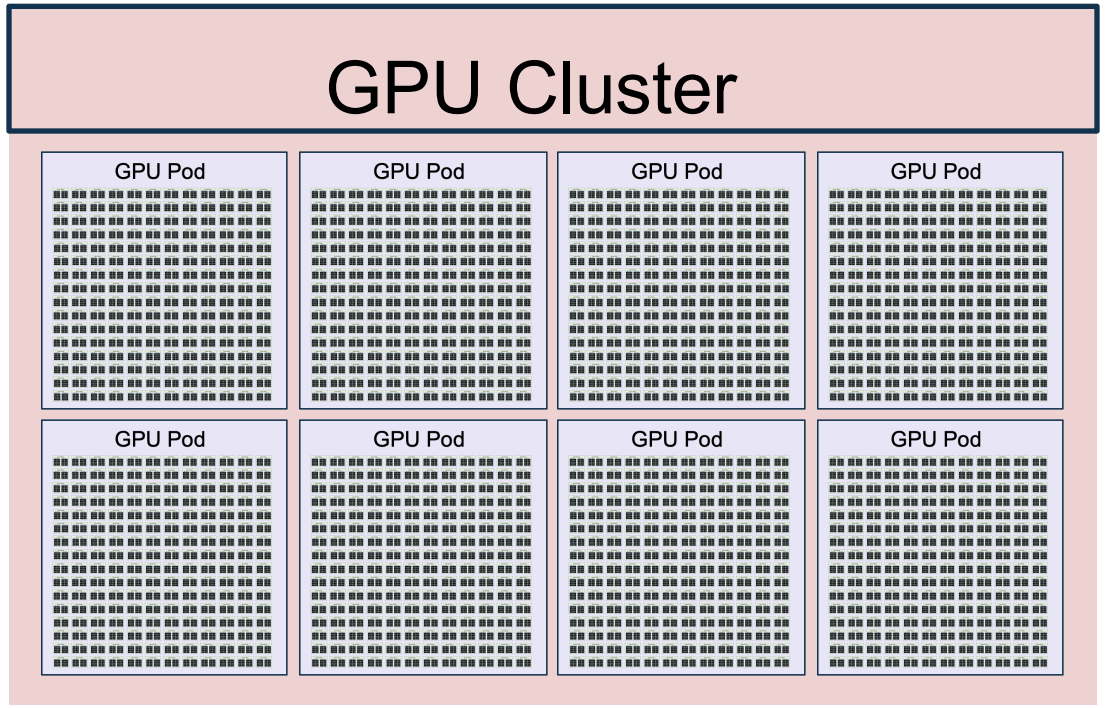

# GPU Cluster = One Big Computer

- **Total Cluster Stats**
- 24,576 GPUs
- 1.875 PB of GPU memory
- 415M FP32 cores
- 13M Tensor Cores
- 24.3 EFLOP/sec = 24.3 x 1018
- Goal: Train one giant neural network on this cluster

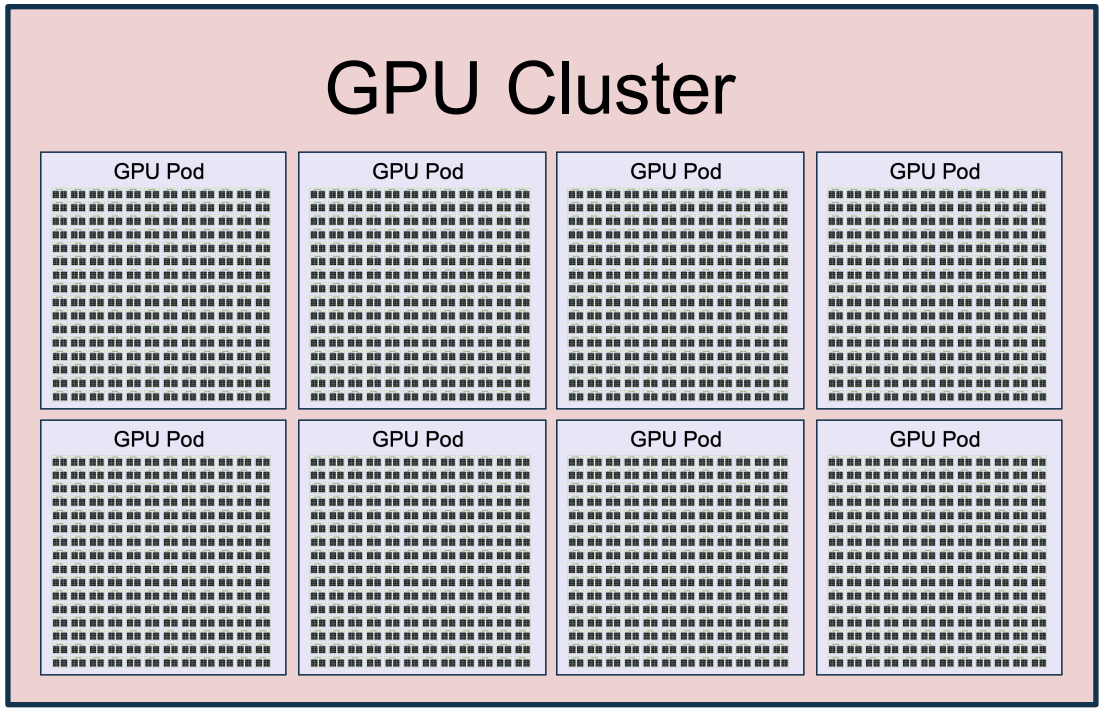

# Google: Tensor Processing Units (TPUs)

- Custom chips designed by Google

- TPU v5p:
- 459 TFLOP/sec BF16 per chip
  95GB of memory per chip
- Arranged in pods of 8960 chips

# Other Training Chips

**AMD MI325X**
1300 TFLOP/sec BF16
256GB memory

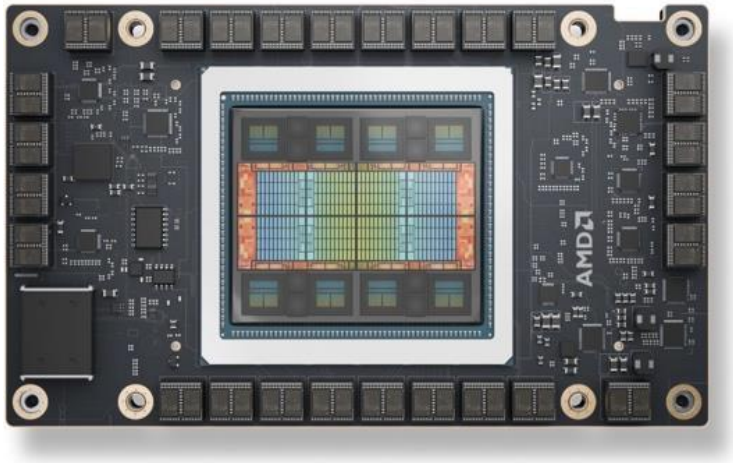


**AWS Trainium2**
667 TFLOP/sec BF16
96GB memory
Packed in UltraServers with 64 chips

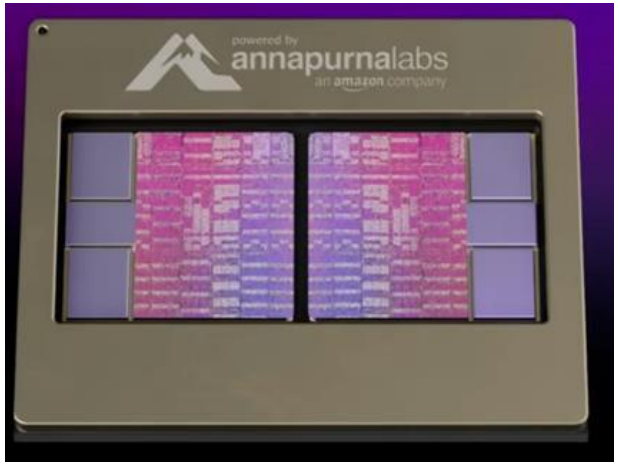

# How to train on lots of GPUs

# How to train on lots of GPUs

- A model with $L$ layers operates on tensors of shape $(Batch, Sequence, Dim)$

- Data Parallelism (DP): Split on $Batch$ dimension
- Context Parallelism (CP): Split on $Sequence$ dimension
- Pipeline Parallelism (PP): Split on $L$ dimension
- Tensor Parallelism (TP): Split on $Dim$ dimension

# Data Parallelism

- Recall: Loss is usually averaged over a minibatch of $N$ samples
- Idea: Use minibatch of $MN$ samples, split over $M$ GPUs
- Gradients are linear, so each GPU computes its own gradient:

- Each GPU computes gradient on $N$ examples

$$L = \frac{1}{MN} \sum_{i}^{M} \sum_{j}^{N} l(x_{ij}, W)$$

- Average gradients across $M$ GPUs

$$\frac{\partial L}{\partial W} = \frac{1}{M} \sum_{i}^{M} \left( \frac{1}{N} \sum_{j}^{N} \frac{\partial}{\partial W} l\left(x_{ij}, W\right) \right)$$

# Data Parallelism

- 1. Each GPU has it's own copy of model + optimizer
- 2. Each GPU loads its own batch of data
- 3. Each GPU runs forward to compute loss
- 4. Each GPU runs backward to compute gradients
- 5. Average gradients across all GPUs
- 6. Each GPU updates its own weights
- 4 and 5 run in parallel

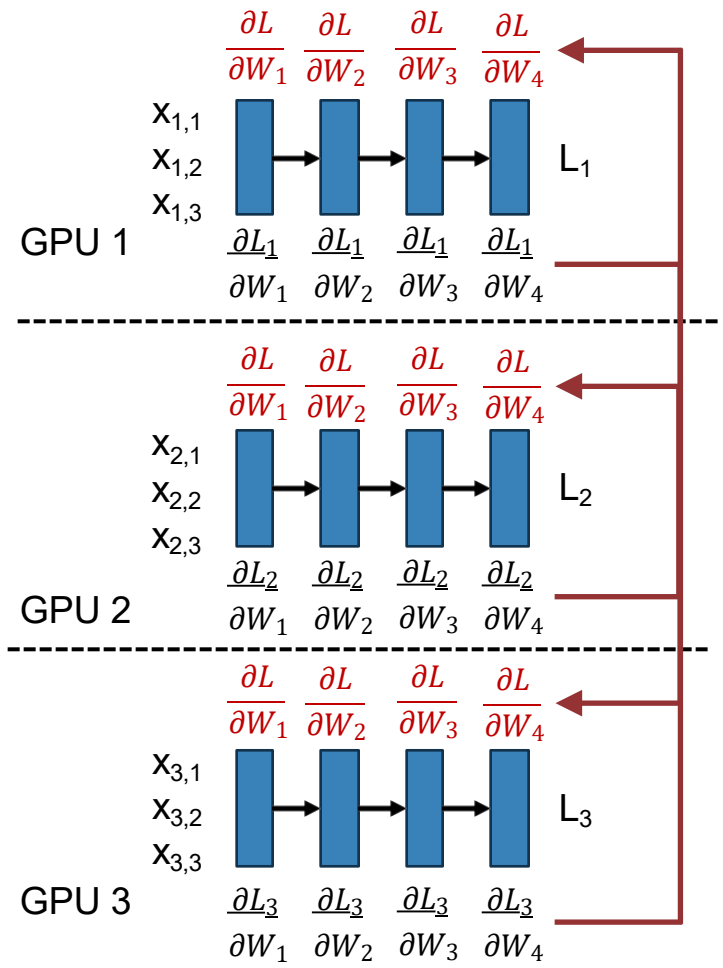

# Data Parallelism

- Problem: **Model size constrained by GPU memory**
- 1B params takes 8GB; 10B params fills up 80GB GPU
- **Solution**: Split model weights across GPUs

# Fully Sharded Data Parallelism (FSPD)

- Split model weights across GPUs
- Each weight $W_i$ is owned by one GPU, which also holds its grads and optim states

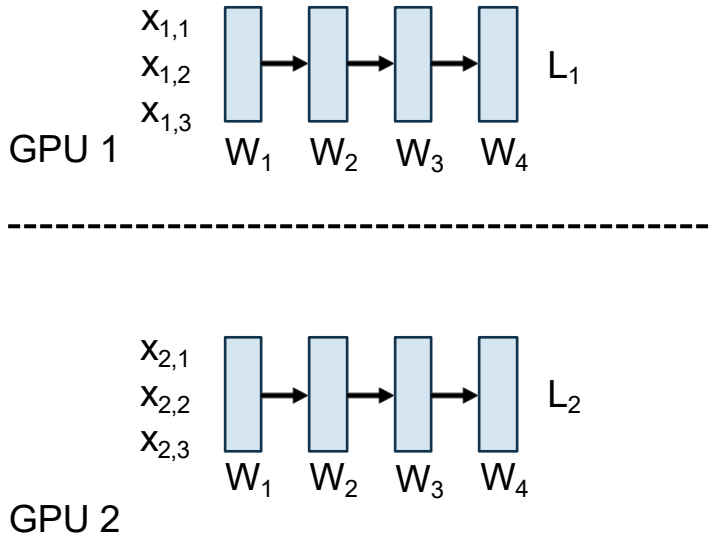

# Fully Sharded Data Parallelism (FSPD)

- Split model weights across GPUs
- Each weight $W_i$ is owned by one GPU, which also holds its grads and optim states
- 1. Before forward for layer $i$, the GPU that owns $W_i$ broadcasts it to all GPUs

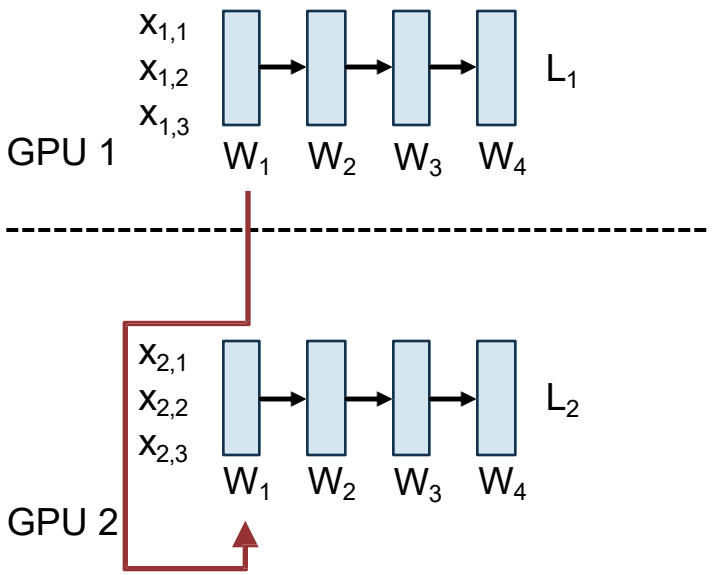

# Fully Sharded Data Parallelism (FSPD)

- Split model weights across GPUs
- Each weight $W_i$ is owned by one GPU, which also holds its grads and optim states
- 1. Before forward for layer $i$, the GPU that owns $W_i$ broadcasts it to all GPUs
- 2. All GPUs run forward for layer $i$, then delete their local copy of $W_i$
  - Fetch $W_{i+1}$ while computing forward with $W_i$

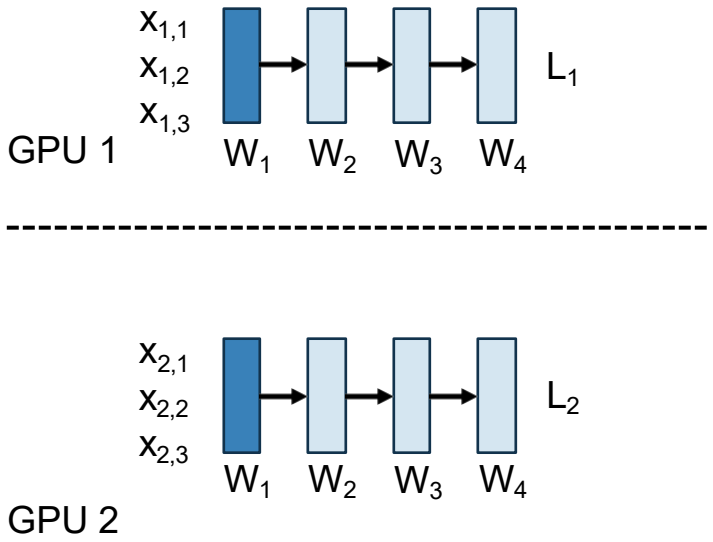

# Fully Sharded Data Parallelism (FSPD)

- Split model weights across GPUs
- Each weight $W_i$ is owned by one GPU, which also holds its grads and optim states
- 1. Before forward for layer $i$, the GPU that owns $W_i$ broadcasts it to all GPUs
- 2. All GPUs run forward for layer $i$, then delete their local copy of $W_i$
  - Fetch $W_{i+1}$ while computing forward with $W_i$

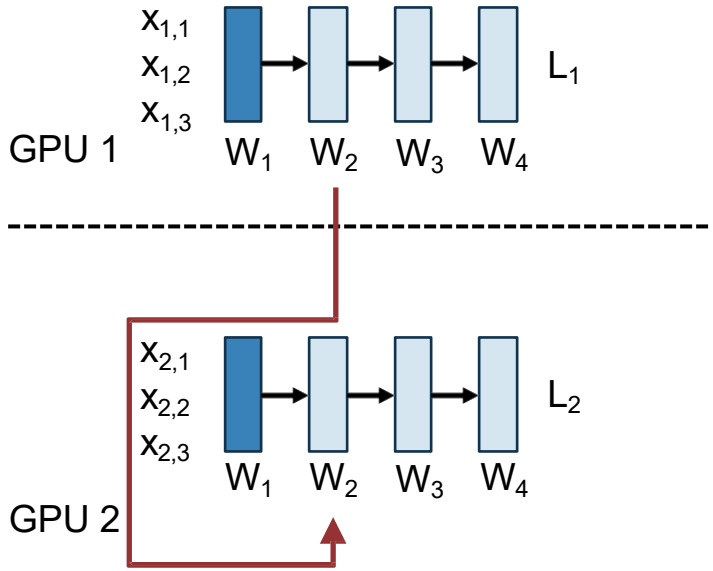

# Fully Sharded Data Parallelism (FSPD)

- Split model weights across GPUs
- Each weight $W_i$ is owned by one GPU, which also holds its grads and optim states
- 1. Before forward for layer $i$, the GPU that owns $W_i$ broadcasts it to all GPUs
- 2. All GPUs run forward for layer $i$, then delete their local copy of $W_i$
  - Fetch $W_{i+1}$ while computing forward with $W_i$

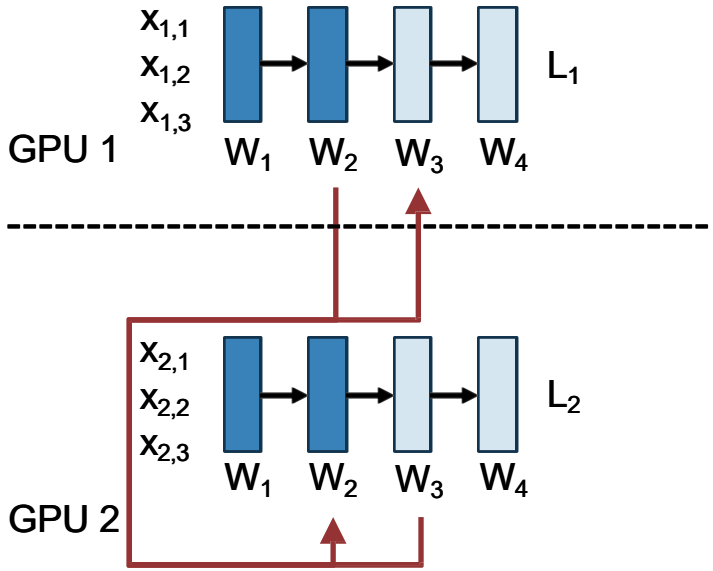

# Fully Sharded Data Parallelism (FSPD)

- Split model weights across GPUs
- Each weight $W_i$ is owned by one GPU, which also holds its grads and optim states
- 1. Before forward for layer $i$, the GPU that owns $W_i$ broadcasts it to all GPUs
- 2. All GPUs run forward for layer $i$, then delete their local copy of $W_i$
  - Fetch $W_{i+1}$ while computing forward with $W_i$

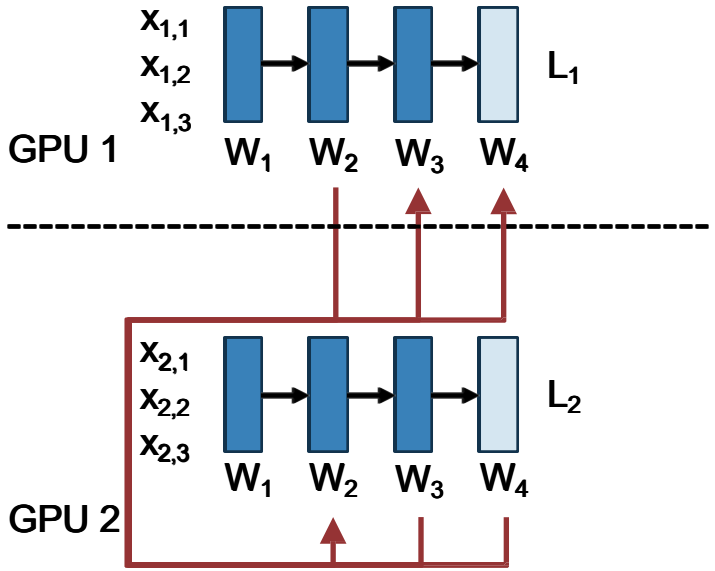

# Fully Sharded Data Parallelism (FSPD)

- Split model weights across GPUs
- Each weight $W_i$ is owned by one GPU, which also holds its grads and optim states
- 1. Before forward for layer $i$, the GPU that owns $W_i$ broadcasts it to all GPUs
- 2. All GPUs run forward for layer $i$, then delete their local copy of $W_i$
  - Fetch $W_{i+1}$ while computing forward with $W_i$

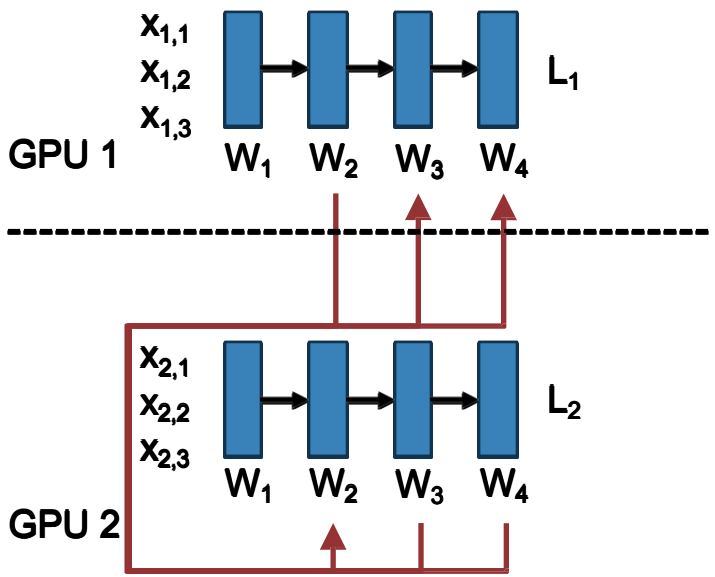

# Fully Sharded Data Parallelism (FSPD)

- Split model weights across GPUs
- Each weight $W_i$ is owned by one GPU, which also holds its grads and optim states
- 1. Before forward for layer $i$, the GPU that owns $W_i$ broadcasts it to all GPUs
- 2. All GPUs run forward for layer $i$, then delete their local copy of $W_i$
  - Fetch $W_{i+1}$ while computing forward with $W_i$
- 3. Before backward for layer $i$, owner broadcasts $W_i$ to all GPUs
  - Optimization: don't delete last weight at end of forward to avoid immediately resending it

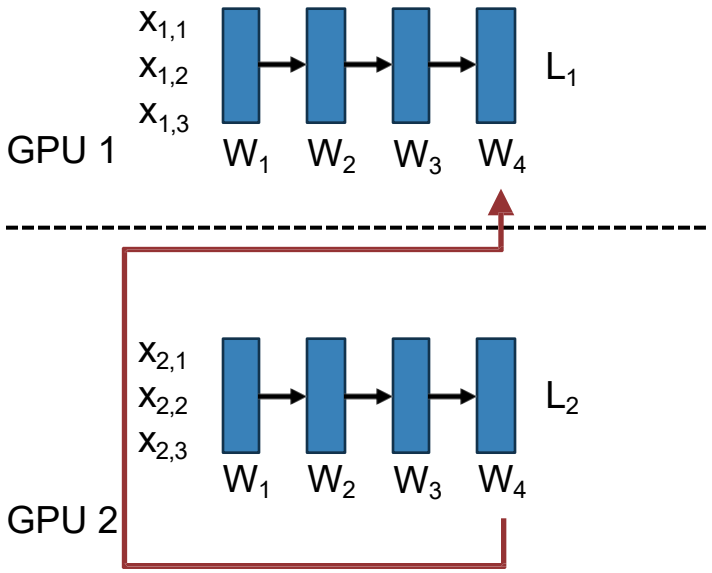

# Fully Sharded Data Parallelism (FSPD)

- Split model weights across GPUs
- Each weight $W_i$ is owned by one GPU, which also holds its grads and optim states
- 1. Before forward for layer $i$, the GPU that owns $W_i$ broadcasts it to all GPUs
- 2. All GPUs run forward for layer $i$, then delete their local copy of $W_i$
  - Fetch $W_{i+1}$ while computing forward with $W_i$
- 3. Before backward for layer $i$, owner broadcasts $W_i$ to all GPUs
  - Optimization: don't delete last weight at end of forward to avoid immediately resending it
- 4. All GPUs run backward for layer $i$ to compute local $dL/dW_i$ and delete $W_i$

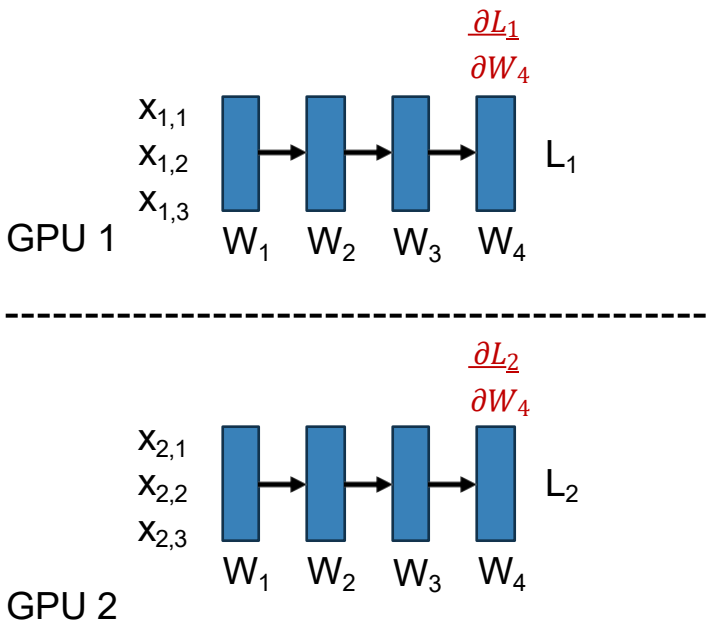

# Fully Sharded Data Parallelism (FSPD)

- Split model weights across GPUs
- Each weight $W_i$ is owned by one GPU, which also holds its grads and optim states
- 1. Before forward for layer $i$, the GPU that owns $W_i$ broadcasts it to all GPUs
- 2. All GPUs run forward for layer $i$, then delete their local copy of $W_i$
  - Fetch $W_{i+1}$ while computing forward with $W_i$
- 3. Before backward for layer $i$, owner broadcasts $W_i$ to all GPUs
  - Optimization: don't delete last weight at end of forward to avoid immediately resending it
- 4. All GPUs run backward for layer $i$ to compute local $dL/dW_i$ and delete $W_i$
- 5. After backward for layer $i$, all GPUs send local $dL/dW_i$ to owning GPU and delete local $dL/dW_i$

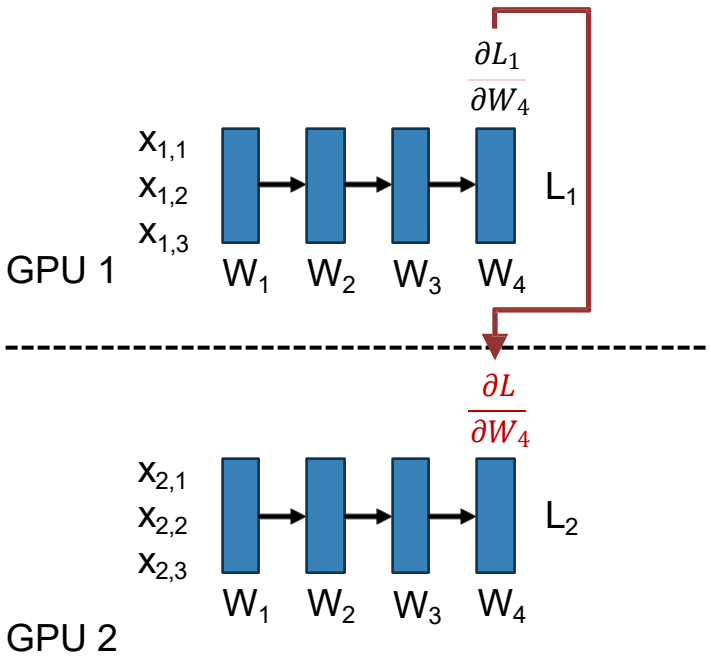

# Fully Sharded Data Parallelism (FSPD)

- Split model weights across GPUs
- Each weight $W_i$ is owned by one GPU, which also holds its grads and optim states
- 1. Before forward for layer $i$, the GPU that owns $W_i$ broadcasts it to all GPUs
- 2. All GPUs run forward for layer $i$, then delete their local copy of $W_i$
  - Fetch $W_{i+1}$ while computing forward with $W_i$
- 3. Before backward for layer $i$, owner broadcasts $W_i$ to all GPUs
  - Optimization: don't delete last weight at end of forward to avoid immediately resending it
- 4. All GPUs run backward for layer $i$ to compute local $dL/dW_i$ and delete $W_i$
- 5. After backward for layer $i$, all GPUs send local $dL/dW_i$ to owning GPU and delete local $dL/dW_i$
- 6. Owner of $W_i$ makes gradient update

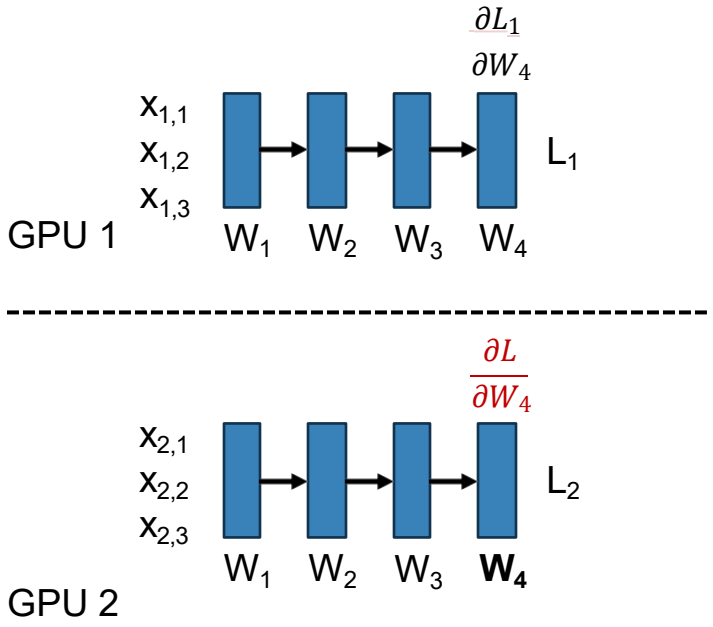

# Fully Sharded Data Parallelism (FSPD)

- Split model weights across GPUs
- Each weight $W_i$ is owned by one GPU, which also holds its grads and optim states
- 1. Before forward for layer $i$, the GPU that owns $W_i$ broadcasts it to all GPUs
- 2. All GPUs run forward for layer $i$, then delete their local copy of $W_i$
  - Fetch $W_{i+1}$ while computing forward with $W_i$
- 3. Before backward for layer $i$, owner broadcasts $W_i$ to all GPUs
  - Optimization: don't delete last weight at end of forward to avoid immediately resending it
- 4. All GPUs run backward for layer $i$ to compute local $dL/dW_i$ and delete $W_i$
- 5. After backward for layer $i$, all GPUs send local $dL/dW_i$ to owning GPU and delete local $dL/dW_i$
- 6. Owner of $W_i$ makes gradient update

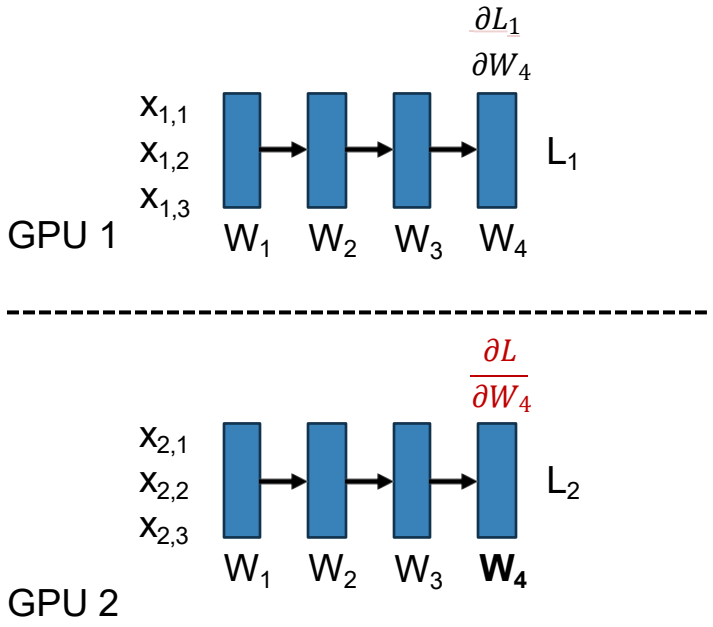


Fetch $W_i$ while computing with $W_{i+1}$; send $dL/dW_i$ and update $W_i$ while computing with $W_{i-1}$

# Fully Sharded Data Parallelism (FSPD)

- Split model weights across GPUs
- Each weight $W_i$ is owned by one GPU, which also holds its grads and optim states
- 1. Before forward for layer $i$, the GPU that owns $W_i$ broadcasts it to all GPUs
- 2. All GPUs run forward for layer $i$, then delete their local copy of $W_i$
  - Fetch $W_{i+1}$ while computing forward with $W_i$
- 3. Before backward for layer $i$, owner broadcasts $W_i$ to all GPUs
  - Optimization: don't delete last weight at end of forward to avoid immediately resending it
- 4. All GPUs run backward for layer $i$ to compute local $dL/dW_i$ and delete $W_i$
- 5. After backward for layer $i$, all GPUs send local $dL/dW_i$ to owning GPU and delete local $dL/dW_i$
- 6. Owner of $W_i$ makes gradient update

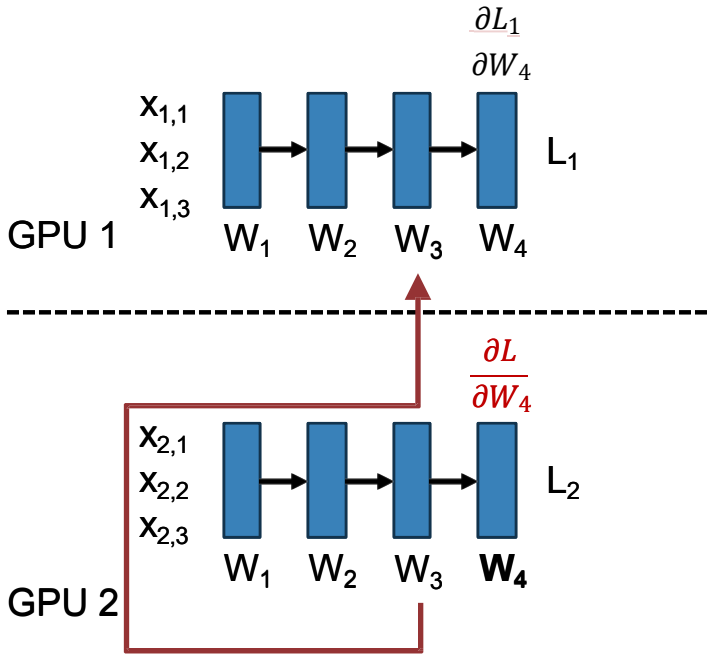


Fetch $W_i$ while computing with $W_{i+1}$; send $dL/dW_i$ and update $W_i$ while computing with $W_{i-1}$

# Fully Sharded Data Parallelism (FSPD)

- Split model weights across GPUs
- Each weight $W_i$ is owned by one GPU, which also holds its grads and optim states
- 1. Before forward for layer $i$, the GPU that owns $W_i$ broadcasts it to all GPUs
- 2. All GPUs run forward for layer $i$, then delete their local copy of $W_i$
  - Fetch $W_{i+1}$ while computing forward with $W_i$
- 3. Before backward for layer $i$, owner broadcasts $W_i$ to all GPUs
  - Optimization: don't delete last weight at end of forward to avoid immediately resending it
- 4. All GPUs run backward for layer $i$ to compute local $dL/dW_i$ and delete $W_i$
- 5. After backward for layer $i$, all GPUs send local $dL/dW_i$ to owning GPU and delete local $dL/dW_i$
- 6. Owner of $W_i$ makes gradient update

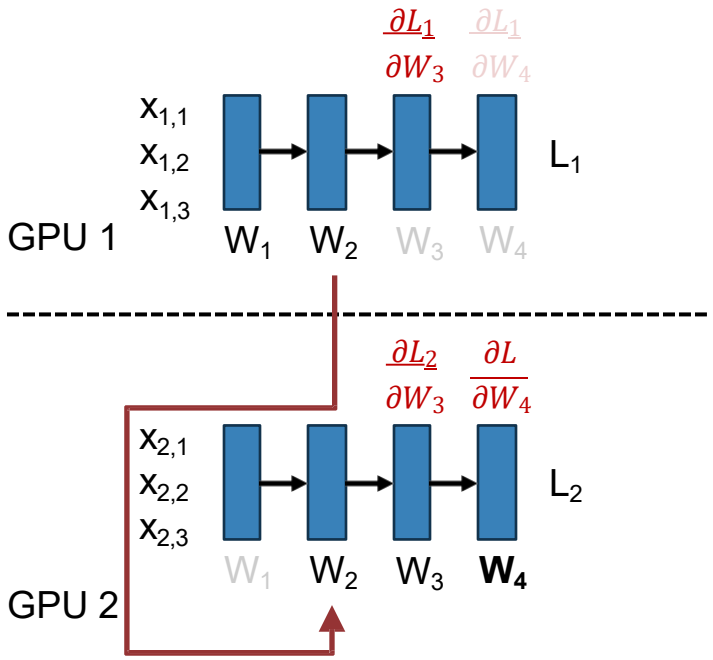


Fetch $W_i$ while computing with $W_{i+1}$; send $dL/dW_i$ and update $W_i$ while computing with $W_{i-1}$

# Fully Sharded Data Parallelism (FSPD)

- Split model weights across GPUs
- Each weight $W_i$ is owned by one GPU, which also holds its grads and optim states
- 1. Before forward for layer $i$, the GPU that owns $W_i$ broadcasts it to all GPUs
- 2. All GPUs run forward for layer $i$, then delete their local copy of $W_i$
  - Fetch $W_{i+1}$ while computing forward with $W_i$
- 3. Before backward for layer $i$, owner broadcasts $W_i$ to all GPUs
  - Optimization: don't delete last weight at end of forward to avoid immediately resending it
- 4. All GPUs run backward for layer $i$ to compute local $dL/dW_i$ and delete $W_i$
- 5. After backward for layer $i$, all GPUs send local $dL/dW_i$ to owning GPU and delete local $dL/dW_i$
- 6. Owner of $W_i$ makes gradient update

All at the same time:
- Send grads and update W3
- Run backward with W2
- Fetch W1

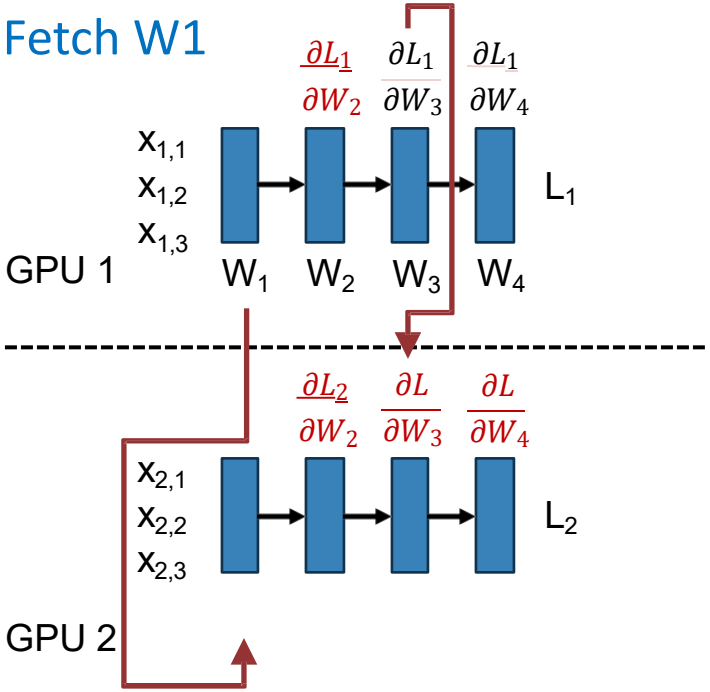


Fetch $W_i$ while computing with $W_{i+1}$; send $dL/dW_i$ and update $W_i$ while computing with $W_{i-1}$

# Fully Sharded Data Parallelism (FSPD)

- Split model weights across GPUs
- Each weight $W_i$ is owned by one GPU, which also holds its grads and optim states
- 1. Before forward for layer $i$, the GPU that owns $W_i$ broadcasts it to all GPUs
- 2. All GPUs run forward for layer $i$, then delete their local copy of $W_i$
  - Fetch $W_{i+1}$ while computing forward with $W_i$
- 3. Before backward for layer $i$, owner broadcasts $W_i$ to all GPUs
  - Optimization: don't delete last weight at end of forward to avoid immediately resending it
- 4. All GPUs run backward for layer $i$ to compute local $dL/dW_i$ and delete $W_i$
- 5. After backward for layer $i$, all GPUs send local $dL/dW_i$ to owning GPU and delete local $dL/dW_i$
- 6. Owner of $W_i$ makes gradient update

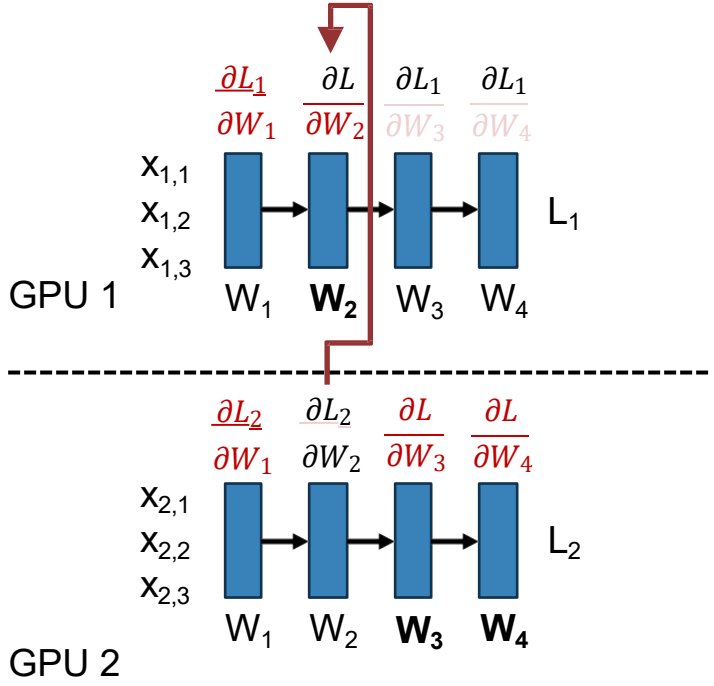


Fetch $W_i$ while computing with $W_{i+1}$; send $dL/dW_i$ and update $W_i$ while computing with $W_{i-1}$

# Fully Sharded Data Parallelism (FSPD)

- Split model weights across GPUs
- Each weight $W_i$ is owned by one GPU, which also holds its grads and optim states
- 1. Before forward for layer $i$, the GPU that owns $W_i$ broadcasts it to all GPUs
- 2. All GPUs run forward for layer $i$, then delete their local copy of $W_i$
  - Fetch $W_{i+1}$ while computing forward with $W_i$
- 3. Before backward for layer $i$, owner broadcasts $W_i$ to all GPUs
  - Optimization: don't delete last weight at end of forward to avoid immediately resending it
- 4. All GPUs run backward for layer $i$ to compute local $dL/dW_i$ and delete $W_i$
- 5. After backward for layer $i$, all GPUs send local $dL/dW_i$ to owning GPU and delete local $dL/dW_i$
- 6. Owner of $W_i$ makes gradient update

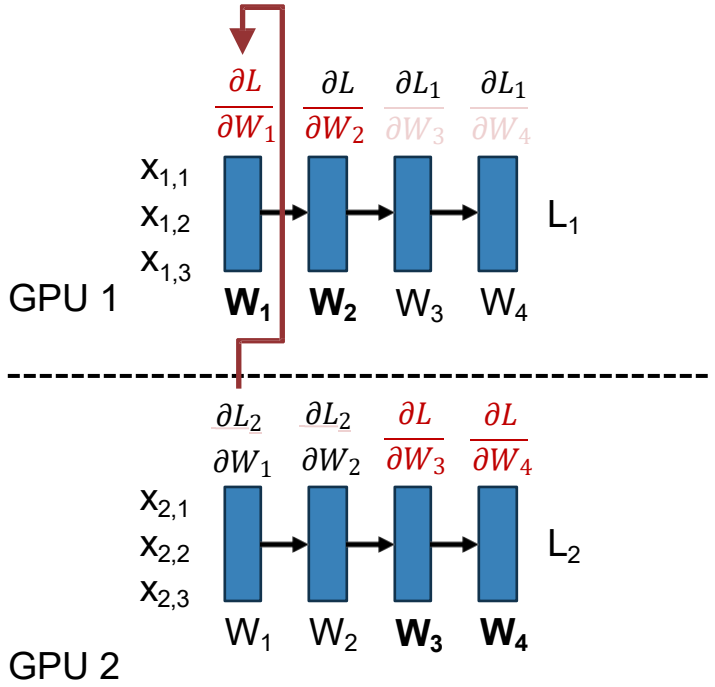


Fetch $W_i$ while computing with $W_{i+1}$; send $dL/dW_i$ and update $W_i$ while computing with $W_{i-1}$

# Hybrid Sharded Data Parallel (HSDP)

- Split $N = M * K$ GPUs into $M$ groups of $K$
- Each group of $K$ GPUs does FSDP, splits model weights across all $K$ GPUs. $K$ can be O(100) GPUs.
- Do DP across the $M$ groups.
- **Multidimensional parallelism**: Use different parallelism strategies at the same time! Organize GPUs in a 2D grid
  - 3x communication inside each group of $K$:
  - $W$ in forward, $W + dL/dW$ in backward. Keep them in the same node / pod.
  - 1x communication across the $M$ groups: $dL/dW$ in backward. Can use slower communication

Example: HSDP with M=2 groups of K=4 GPUs

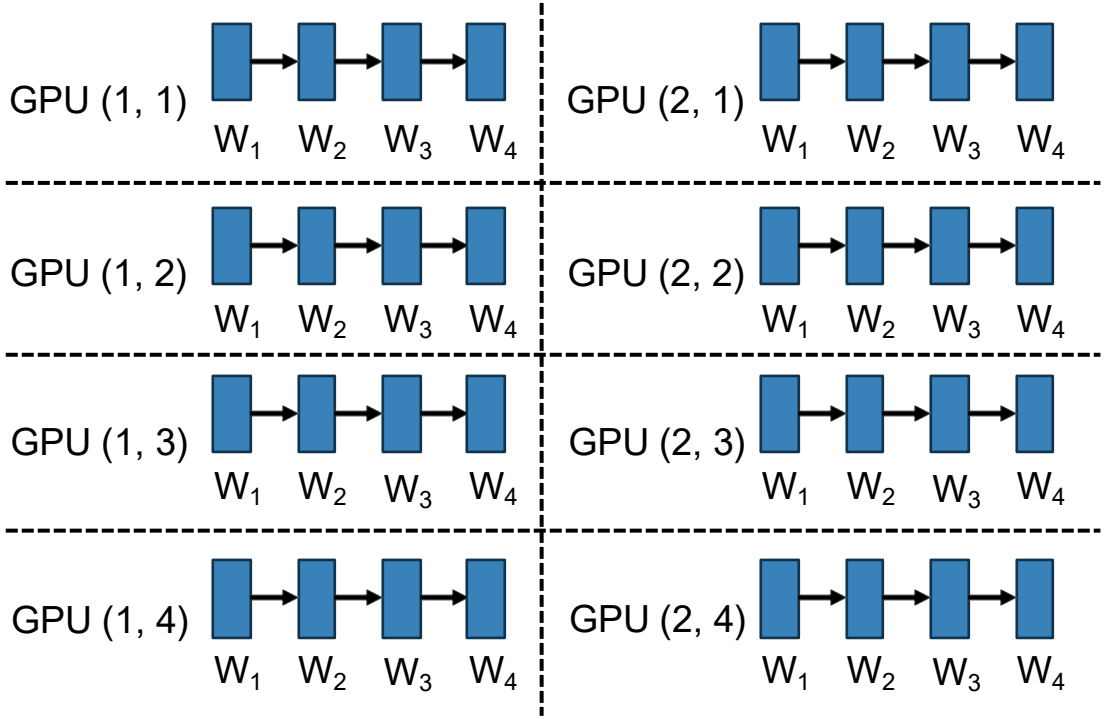

# Data Parallelism (DP, FSPD, HSDP)

- Split data and model weights across GPUs
- Can now scale up to big models that don't fit in a single GPU!
  - A model with 100B params needs 4 numbers per param (param, grad, Adam β1, β2) Why?;
  - Model parameters, gradient, Adam first order momentum, second order momentum
  - **2** bytes per number takes 800GB;
  - splitting over 80 GPUs is just 10GB per GPU!
- <u>Problem</u>: Model activations can fill up memory.
  - Llama3-405B Transformer has 126 layers, D=16,384, seq length 4096.
  - Just FFN hidden activations need **2***126*4*16384*4096 bytes= 63GB;
  - plus need other activations.
- <u>Solution</u>: Don't keep all activations in memory; recompute them **on the fly!**

# Activation Checkpointing

- Each layer in the network is two functions:
- <u>Forward</u>: Compute next-layer activations
$$A_{i+1} = F_i^{\rightarrow}(A_i)$$
- <u>Backward</u>: Compute prev-layer gradients
$$G_i = F_i^{\leftarrow}(A_i, G_{i+1})$$
- Q: How much compute and memory does this take? Assume each $F_i^{\rightarrow}$ and $F_i^{\leftarrow}$ is O(1) compute and memory.

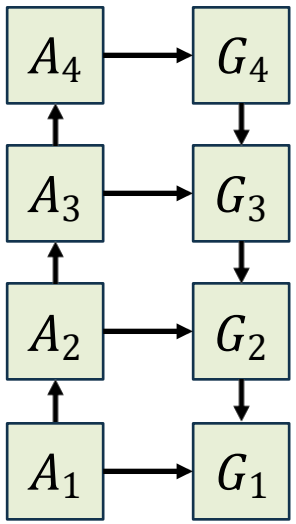

# Activation Checkpointing

- Each layer in the network is two functions:
- <u>Forward</u>: Compute next-layer activations

$$A_{i+1} = F_i^{\rightarrow}(A_i)$$

- <u>Backward</u>: Compute prev-layer gradients

$$G_i = F_i^{\leftarrow}(A_i, G_{i+1})$$

- Q: How much compute and memory does this take? Assume each $F_i^{\rightarrow}$ and $F_i^{\leftarrow}$ is O(1) compute and memory.

Compute: 1
Current Memory: 1
Peak Memory: 1

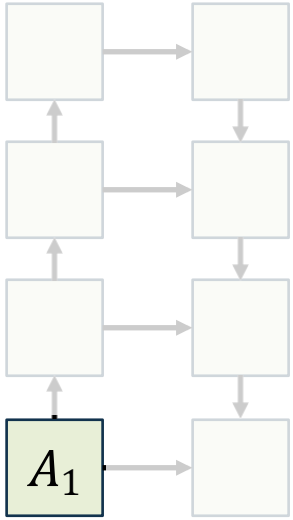

# Activation Checkpointing

- Each layer in the network is two functions:
- <u>Forward</u>: Compute next-layer activations

$$A_{i+1} = F_i^{\rightarrow}(A_i)$$

- <u>Backward</u>: Compute prev-layer gradients

$$G_i = F_i^{\leftarrow}(A_i, G_{i+1})$$

- Q: How much compute and memory does this take? Assume each $F_i^{\rightarrow}$ and $F_i^{\leftarrow}$ is O(1) compute and memory.

Compute: 2
Current Memory: 2
Peak Memory: 2

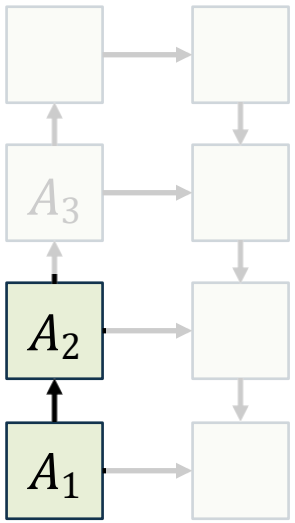

# Activation Checkpointing

- Each layer in the network is two functions:
- <u>Forward</u>: Compute next-layer activations

$$A_{i+1} = F_i^{\rightarrow}(A_i)$$

- <u>Backward</u>: Compute prev-layer gradients

$$G_i = F_i^{\leftarrow}(A_i, G_{i+1})$$

- Q: How much compute and memory does this take? Assume each $F_i^{\rightarrow}$ and $F_i^{\leftarrow}$ is O(1) compute and memory.

Compute: 3
Current Memory: 3
Peak Memory: 3

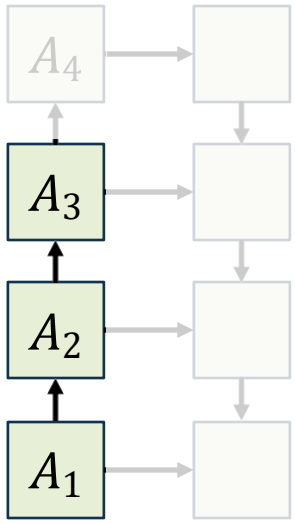

# Activation Checkpointing

- Each layer in the network is two functions:
- <u>Forward</u>: Compute next-layer activations

$$A_{i+1} = F_i^{\rightarrow}(A_i)$$

- <u>Backward</u>: Compute prev-layer gradients

$$G_i = F_i^{\leftarrow}(A_i, G_{i+1})$$

- Q: How much compute and memory does this take? Assume each $F_i^{\rightarrow}$ and $F_i^{\leftarrow}$ is O(1) compute and memory.

Compute: 4
Current Memory: 4
Peak Memory: 4

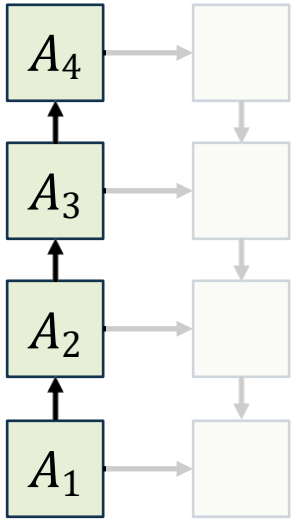

# Activation Checkpointing

- Each layer in the network is two functions:
- <u>Forward</u>: Compute next-layer activations

$$A_{i+1} = F_i^{\rightarrow}(A_i)$$

- <u>Backward</u>: Compute prev-layer gradients

$$G_i = F_i^{\leftarrow}(A_i, G_{i+1})$$

- Q: How much compute and memory does this take? Assume each $F_i^{\rightarrow}$ and $F_i^{\leftarrow}$ is O(1) compute and memory.

Compute: 5
Current Memory: 4
Peak Memory: 4

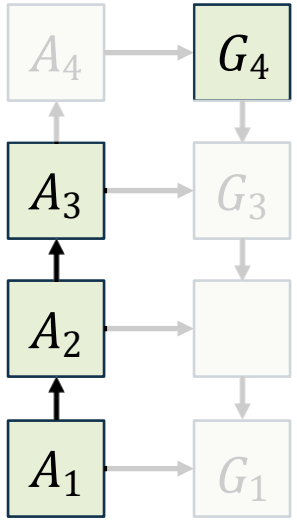

# Activation Checkpointing

- Each layer in the network is two functions:
- <u>Forward</u>: Compute next-layer activations

$$A_{i+1} = F_i^{\rightarrow}(A_i)$$

- <u>Backward</u>: Compute prev-layer gradients

$$G_i = F_i^{\leftarrow}(A_i, G_{i+1})$$

- Q: How much compute and memory does this take? Assume each $F_i^{\rightarrow}$ and $F_i^{\leftarrow}$ is O(1) compute and memory.

Compute: 6
Current Memory: 3
Peak Memory: 4

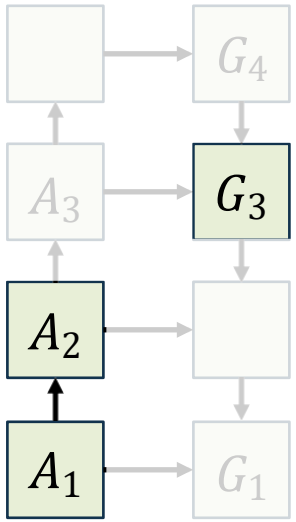

# Activation Checkpointing

- Each layer in the network is two functions:
- <u>Forward</u>: Compute next-layer activations

$$A_{i+1} = F_i^{\rightarrow}(A_i)$$

- <u>Backward</u>: Compute prev-layer gradients

$$G_i = F_i^{\leftarrow}(A_i, G_{i+1})$$

- Q: How much compute and memory does this take? Assume each $F_i^{\rightarrow}$ and $F_i^{\leftarrow}$ is O(1) compute and memory.

Compute: 7
Current Memory: 2
Peak Memory: 4

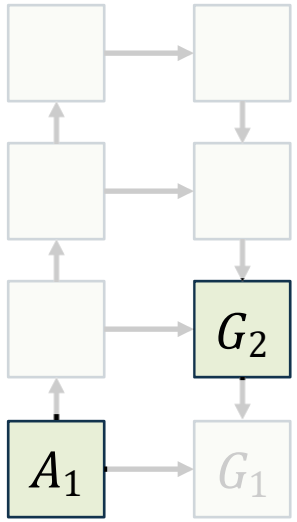

# Activation Checkpointing

- Each layer in the network is two functions:
- <u>Forward</u>: Compute next-layer activations

$$A_{i+1} = F_i^{\rightarrow}(A_i)$$

- <u>Backward</u>: Compute prev-layer gradients

$$G_i = F_i^{\leftarrow}(A_i, G_{i+1})$$

- Q: How much compute and memory does this take? Assume each $F_i^{\rightarrow}$ and $F_i^{\leftarrow}$ is O(1) compute and memory.

Compute: 8
Current Memory: 1
Peak Memory: 4

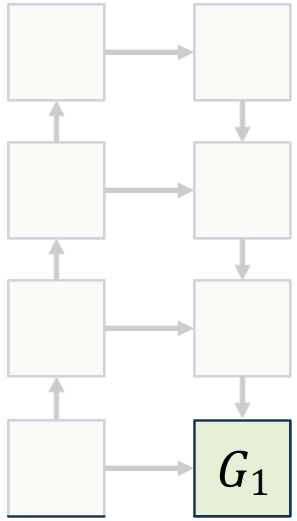

# Activation Checkpointing

- Each layer in the network is two functions:
- <u>Forward</u>: Compute next-layer activations

$$A_{i+1} = F_i^{\rightarrow}(A_i)$$

- <u>Backward</u>: Compute prev-layer gradients

$$G_i = F_i^{\leftarrow}(A_i, G_{i+1})$$

- Forward+backward: O(N) compute, O(N) memory
- Idea: Recompute activations during the backward pass

Compute: 8
Current Memory: 1
Peak Memory: 4

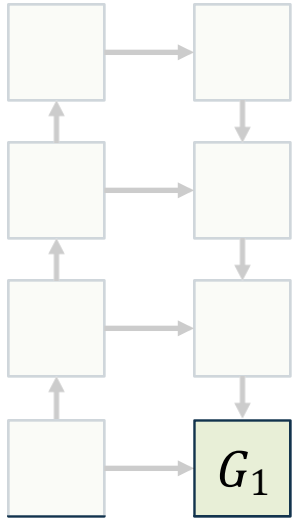

# Activation Checkpointing

- Each layer in the network is two functions:
- <u>Forward</u>: Compute next-layer activations

$$A_{i+1} = F_i^{\rightarrow}(A_i)$$

- <u>Backward</u>: Compute prev-layer gradients

$$G_i = F_i^{\leftarrow}(A_i, G_{i+1})$$

- Forward+backward: O(N) compute, O(N) memory
- Idea: Recompute activations during the backward pass

Compute: 1
Current Memory: 1
Peak Memory: 1

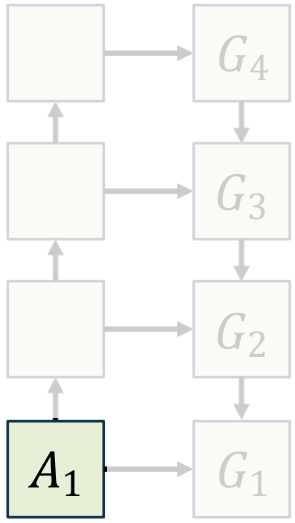

# Activation Checkpointing

- Each layer in the network is two functions:
- <u>Forward</u>: Compute next-layer activations

$$A_{i+1} = F_i^{\rightarrow}(A_i)$$

- <u>Backward</u>: Compute prev-layer gradients

$$G_i = F_i^{\leftarrow}(A_i, G_{i+1})$$

- Forward+backward: O(N) compute, O(N) memory
- Idea: Recompute activations during the backward pass

Compute: 2
Current Memory: 1
Peak Memory: 1

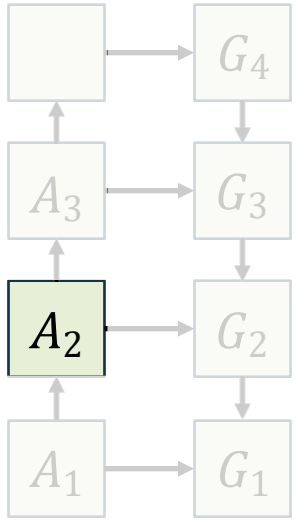

# Activation Checkpointing

- Each layer in the network is two functions:
- <u>Forward</u>: Compute next-layer activations

$$A_{i+1} = F_i^{\rightarrow}(A_i)$$

- <u>Backward</u>: Compute prev-layer gradients

$$G_i = F_i^{\leftarrow}(A_i, G_{i+1})$$

- Forward+backward: O(N) compute, O(N) memory
- Idea: Recompute activations during the backward pass

Compute: 3
Current Memory: 1
Peak Memory: 1

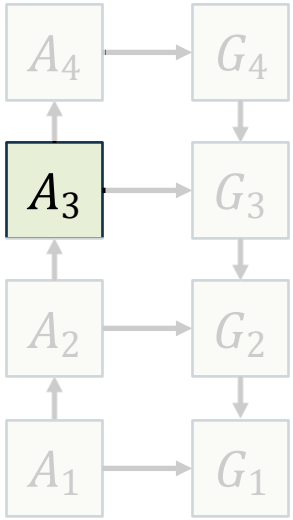

# Activation Checkpointing

- Each layer in the network is two functions:
- <u>Forward</u>: Compute next-layer activations

$$A_{i+1} = F_i^{\rightarrow}(A_i)$$

- <u>Backward</u>: Compute prev-layer gradients

$$G_i = F_i^{\leftarrow}(A_i, G_{i+1})$$

- Forward+backward: O(N) compute, O(N) memory
- Idea: Recompute activations during the backward pass

Compute: 4
Current Memory: 1
Peak Memory: 1

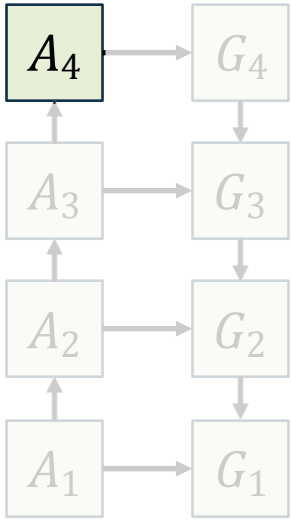

# Activation Checkpointing

- Each layer in the network is two functions:
- <u>Forward</u>: Compute next-layer activations

$$A_{i+1} = F_i^{\rightarrow}(A_i)$$

- <u>Backward</u>: Compute prev-layer gradients

$$G_i = F_i^{\leftarrow}(A_i, G_{i+1})$$

- Forward+backward: O(N) compute, O(N) memory
- Idea: Recompute activations during the backward pass

Compute: 5
Current Memory: 1
Peak Memory: 1

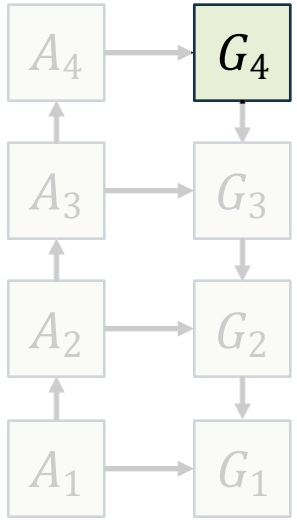

# Activation Checkpointing

- Each layer in the network is two functions:
- <u>Forward</u>: Compute next-layer activations

$$A_{i+1} = F_i^{\rightarrow}(A_i)$$

- <u>Backward</u>: Compute prev-layer gradients

$$G_i = F_i^{\leftarrow}(A_i, G_{i+1})$$

- Forward+backward: O(N) compute, O(N) memory
- Idea: Recompute activations during the backward pass

Compute: 6
Current Memory: 2
Peak Memory: 2

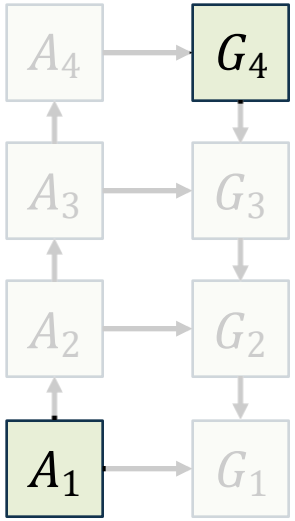

# Activation Checkpointing

- Each layer in the network is two functions:
- <u>Forward</u>: Compute next-layer activations

$$A_{i+1} = F_i^{\rightarrow}(A_i)$$

- <u>Backward</u>: Compute prev-layer gradients

$$G_i = F_i^{\leftarrow}(A_i, G_{i+1})$$

- Forward+backward: O(N) compute, O(N) memory
- Idea: Recompute activations during the backward pass

Compute: 7
Current Memory: 2
Peak Memory: 2

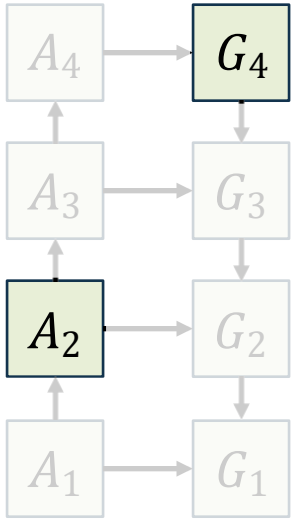

# Activation Checkpointing

- Each layer in the network is two functions:
- <u>Forward</u>: Compute next-layer activations

$$A_{i+1} = F_i^{\rightarrow}(A_i)$$

- <u>Backward</u>: Compute prev-layer gradients

$$G_i = F_i^{\leftarrow}(A_i, G_{i+1})$$

- Forward+backward: O(N) compute, O(N) memory
- Idea: Recompute activations during the backward pass

Compute: 8
Current Memory: 2
Peak Memory: 2

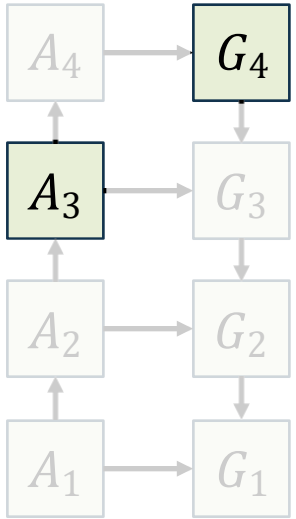

# Activation Checkpointing

- Each layer in the network is two functions:
- <u>Forward</u>: Compute next-layer activations

$$A_{i+1} = F_i^{\rightarrow}(A_i)$$

- <u>Backward</u>: Compute prev-layer gradients

$$G_i = F_i^{\leftarrow}(A_i, G_{i+1})$$

- Forward+backward: O(N) compute, O(N) memory
- Idea: Recompute activations during the backward pass

Compute: 9
Current Memory: 1
Peak Memory: 2

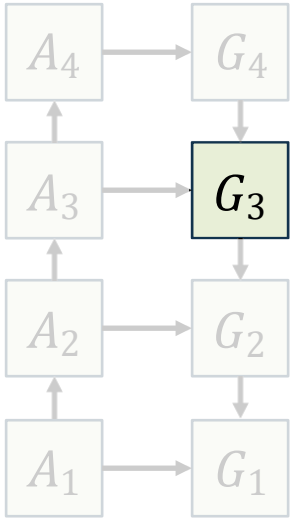

# Activation Checkpointing

- Each layer in the network is two functions:
- <u>Forward</u>: Compute next-layer activations

$$A_{i+1} = F_i^{\rightarrow}(A_i)$$

- <u>Backward</u>: Compute prev-layer gradients

$$G_i = F_i^{\leftarrow}(A_i, G_{i+1})$$

- Forward+backward: O(N) compute, O(N) memory
- Idea: Recompute activations during the backward pass

Compute: 10
Current Memory: 2
Peak Memory: 2

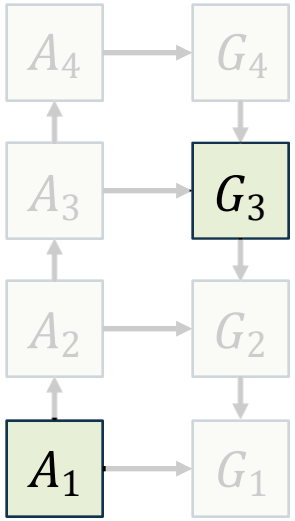

# Activation Checkpointing

- Each layer in the network is two functions:
- <u>Forward</u>: Compute next-layer activations

$$A_{i+1} = F_i^{\rightarrow}(A_i)$$

- <u>Backward</u>: Compute prev-layer gradients

$$G_i = F_i^{\leftarrow}(A_i, G_{i+1})$$

- Forward+backward: O(N) compute, O(N) memory
- Idea: Recompute activations during the backward pass

Compute: 11
Current Memory: 2
Peak Memory: 2

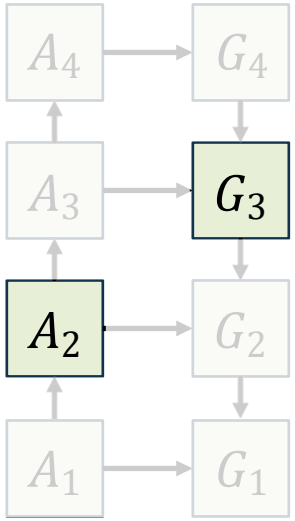

# Activation Checkpointing

- Each layer in the network is two functions:
- <u>Forward</u>: Compute next-layer activations

$$A_{i+1} = F_i^{\rightarrow}(A_i)$$

- <u>Backward</u>: Compute prev-layer gradients

$$G_i = F_i^{\leftarrow}(A_i, G_{i+1})$$

- Forward+backward: O(N) compute, O(N) memory
- Idea: Recompute activations during the backward pass

Compute: 12
Current Memory: 1
Peak Memory: 2

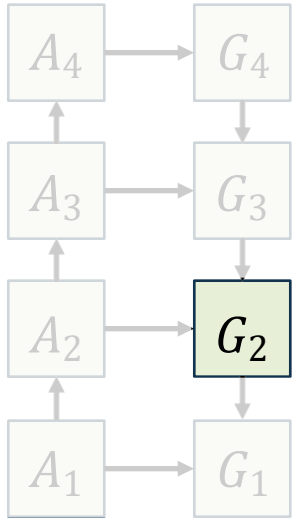

# Activation Checkpointing

- Each layer in the network is two functions:
- <u>Forward</u>: Compute next-layer activations

$$A_{i+1} = F_i^{\rightarrow}(A_i)$$

- <u>Backward</u>: Compute prev-layer gradients

$$G_i = F_i^{\leftarrow}(A_i, G_{i+1})$$

- Forward+backward: O(N) compute, O(N) memory
- Idea: Recompute activations during the backward pass

Compute: 13
Current Memory: 2
Peak Memory: 2

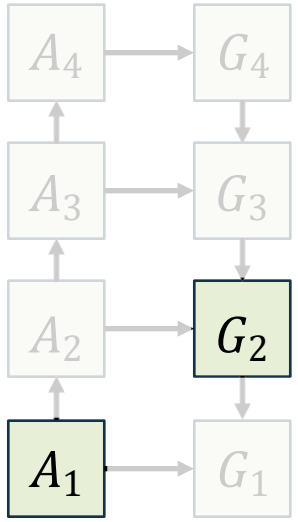

# Activation Checkpointing

- Each layer in the network is two functions:
- <u>Forward</u>: Compute next-layer activations

$$A_{i+1} = F_i^{\rightarrow}(A_i)$$

- <u>Backward</u>: Compute prev-layer gradients

$$G_i = F_i^{\leftarrow}(A_i, G_{i+1})$$

- Forward+backward: O(N) compute, O(N) memory
- Idea: Recompute activations during the backward pass

Compute: 14
Current Memory: 1
Peak Memory: 2

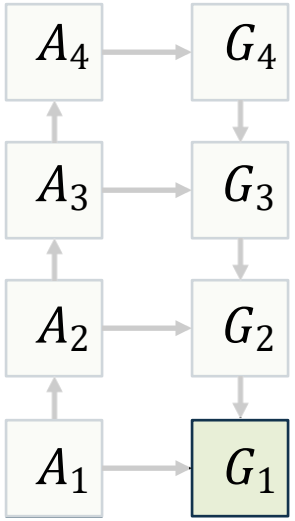

# Activation Checkpointing

- Each layer in the network is two functions:
- <u>Forward</u>: Compute next-layer activations

$$A_{i+1} = F_i^{\rightarrow}(A_i)$$

- <u>Backward</u>: Compute prev-layer gradients

$$G_i = F_i^{\leftarrow}(A_i, G_{i+1})$$

- Forward+backward: O(N) compute, O(N) memory
- Full Recomputation: O($N^2$) compute, O(1) memory
- Idea: Recompute activations during the backward pass
- Problem: N2 compute is bad!

Compute: 14
Current Memory: 1
Peak Memory: 2

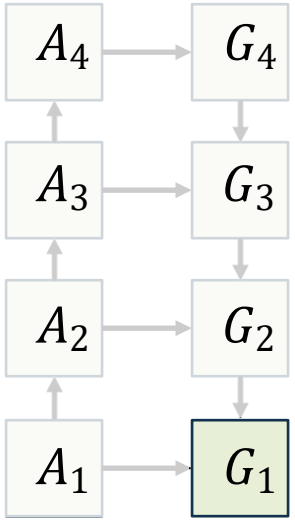

# Activation Checkpointing

- Each layer in the network is two functions:
- <u>Forward</u>: Compute next-layer activations

$$A_{i+1} = F_i^{\rightarrow}(A_i)$$

- <u>Backward</u>: Compute prev-layer gradients

$$G_i = F_i^{\leftarrow}(A_i, G_{i+1})$$

- Forward+backward: O(N) compute, O(N) memory
- Full Recomputation: O($N^2$) compute, O(1) memory
- Idea: Don't recompute everything; save a checkpoint every C layers
- Problem: N2 compute is bad!

Compute: 14
Current Memory: 1
Peak Memory: 2

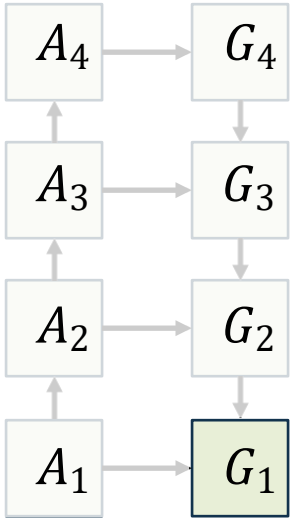

# Activation Checkpointing

- Each layer in the network is two functions:
- <u>Forward</u>: Compute next-layer activations

$$A_{i+1} = F_i^{\rightarrow}(A_i)$$

- <u>Backward</u>: Compute prev-layer gradients

$$G_i = F_i^{\leftarrow}(A_i, G_{i+1})$$

- Forward+backward: O(N) compute, O(N) memory
- Full Recomputation: O($N^2$) compute, O(1) memory
- Idea: Don't recompute everything; save a checkpoint every C layers
- C checkpoints: $O(N^2/C)$ compute, O(C) memory

Compute: 14
Current Memory: 2
Peak Memory: 2

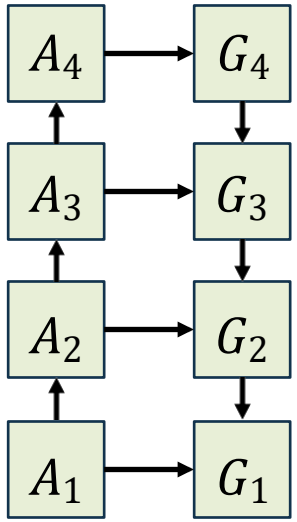

# How to train on lots of GPUs

- HSDP + Activation checkpointing can take you a long way!

- Scaling recipe:
  - Use data parallelism up to ~128 GPUs, models with ~1B params
  - Always set per-GPU batch size to max out GPU memory
  - If your model is >1B params, consider FSDP
  - Add activation checkpointing to fit larger batches per GPU
  - If you have >256 GPUs, consider HSDP
  - If you have >1K GPUs, models >50B params, or sequence lengths > 16K then use more advanced strategies (CP, PP, TP)
- Problem: Lots of knobs to tune! How should we set them?
- Solution: Maximize Model Flops Utilization (MFU)

# Hardware FLOPs Utilization (HFU)

- Recall: H100 can theoretically do 989.4 TFLOP/sec of 16-bit matrix multiplies on Tensor Cores
- Question: How much throughput can we see in practice?
- Hardware FLOPs Utilization (HFU): The fraction of theoretical matmul performance we actually achieve
- Problem: HFU does not account for activation checkpointing or "helper" computation like data augmentation, optimizer, preprocessing

Benchmark for the best-case scenario: only matrix multiply

```
h100_tflop_per_sec = 989.4
sizes = [512, 1024, 2048, 4096,
         8192, 16_384, 32_768]
for N in sizes:
    x = torch.randn(N, N, device="cuda",
                    dtype=torch.bfloat16)
    flops = 2 * N * N * N
    times = []
    for i in range(12):
        t0 = time.time()
        y = x @ x
        if i > 2: times.append(time.time() - t0)
    sec = np.mean(times)
    tflops_per_sec = flops / sec / 10 ** 12
    hfu = 100 * tflops_per_sec / h100_tflop_per_sec
    print(f"N: {N}, "
          f"TFLOP/sec: {tflops_per_sec:.2f}, "
          f"HFU: {hfu:.2f}%")
```

Large matrix multiply gets ~80% HFU on H100

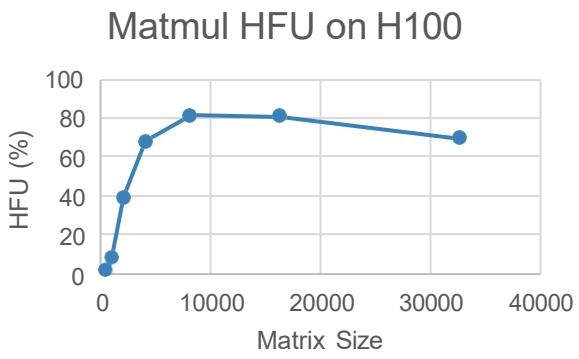


Chowdhery et al, "PaLM: Scaling Language Modeling with Pathways", arXiv 2022

# Model FLOPs Utilization (MFU)

- Idea: What fraction of the GPU's theoretical peak FLOPs is being used for "useful" model computation?
- Compute $FLOP_{theoretical}$ = total number of matrix multiply FLOPs in the forward + backward pass (can approximate backward = 2x forward)(Ignore nonlinearities, normalization, elementwise ops like residuals. They will run on FP32 cores)
- Look up $FLOP/sec_{theoretical}$ = theoretical max throughput of your device (H100: 989 TFLOP/sec)
- Compute $t_{theoretical} = FLOP_{theoretical} / FLOP/sec_{theoretical}$
- Measure $t_{actual}$ = Actual time for a full iteration of data loading, forward, backward, optimizer step
- $MFU = t_{theoretical} / t_{actual}$
- Optimize distributed training setup to maximize MFU!

# Model FLOPs Utilization (MFU)

- Idea: What fraction of the GPU's theoretical peak FLOPs is being used for "useful" model computation?
- MFU >30% is good, >40% is excellent

| Model | # of Parameters (in billions) | Accelerator chips | Model FLOPS utilization |
|---|---|---|---|
| GPT-3 | 175B | V100 | 21.3% |
| Gopher | 280B | 4096 TPU v3 | 32.5% |
| Megatron-Turing NLG | 530B | 2240 A100 | 30.2% |
| PaLM | 540B | 6144 TPU v4 | 46.2% |

Chowdhery et al, "PaLM: Scaling Language Modeling with Pathways", arXiv 2022

Example: Llama3-405B training on H100 GPUs

| GPUs | TFLOPs/GPU | BF16 MFU |
|---|---|---|
| 8,192 | 430 | 43% |
| 16,384 | 400 | 41% |
| 16,384 | 380 | 38% |

```python
L, D, N = 8, 8192, 8192

flop_fwd = N * L * 2 * D * D
flop_bwd = 2 * flop_fwd
flop_theoretical = flop_fwd + flop_bwd
t_theoretical = flop_theoretical / (989.4 * 10 ** 12)

layers = []
for _ in range(L):
    layers += [torch.nn.Linear(D, D), torch.nn.ReLU()]
model = torch.nn.Sequential(*layers).cuda()
optimizer = torch.optim.Adam(model.parameters(), lr=1e-4)

for _ in range(20):
    torch.cuda.synchronize()
    t0 = time.time()
    x = torch.randn(
        N, D, device="cuda",
        dtype=torch.float32
    )
    with torch.autocast(
        device_type="cuda",
        dtype=torch.bfloat16,
    ):
        y = model(x)
    loss = ((x - y) ** 2.0).sum()
    loss.backward()
    optimizer.step()
    optimizer.zero_grad()
    torch.cuda.synchronize()
    t_actual = time.time() - t0
    mfu = t_theoretical / t_actual
    print(f"MFU: {100*mfu:.2f}%")
```

Example: Wide MLP with big batch size gets ~49% MFU on H100

More recent devices sometimes get *worse* MFU since their peak FLOPs increase much faster than their memory bandwitdh

# How to train on lots of GPUs

- A model with $L$ layers operates on tensors of shape ($Batch$, $Sequence$, $Dim$)

- Data Parallelism (DP): Split on $Batch$ dimension
- Context Parallelism (CP): Split on $Sequence$ dimension

# Context Parallelism (CP)

- (Usually for Transformers)
- Idea: Transformers operate on L-length sequences.
- Use multiple GPUs to process a single long sequence
- Normalization, residual connections: Easy, they have no weights and trivially parallelizable
- MLP: Trivially parallelizable, but has weights. Each GPU keeps a copy of the weights and communicates gradients like in DP
- Attention: More complex, need to dig in

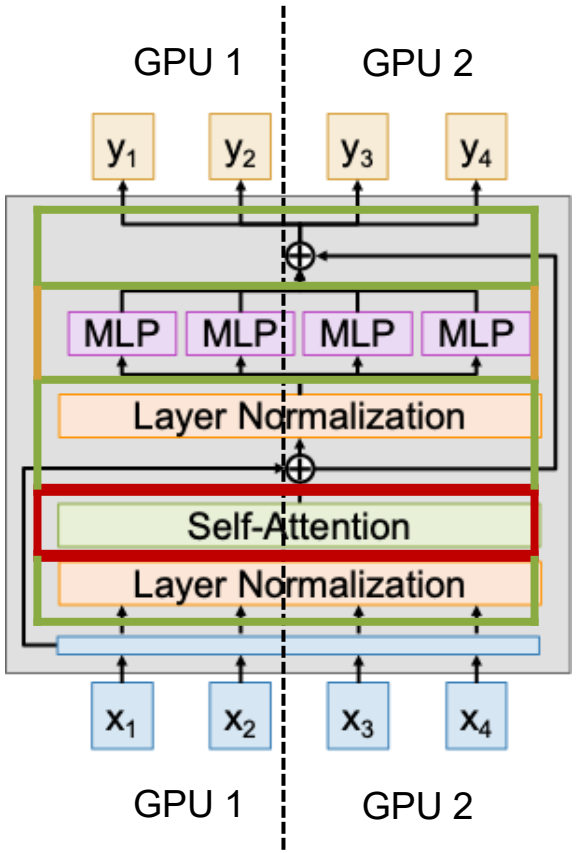

# Context Parallelism (CP)

- (Usually for Transformers)
- Idea: Transformers operate on S-length sequences. Use multiple GPUs to process a single long sequence
- QKV Projection: Same as MLP, parallelize over the sequence and sync gradients as in DP
- Attention operator: Hardest to parallelize
- (Option 1) Ring Attention: Divide into blocks and distribute over GPUs. Inner loop over keys/values, outer loop over queries. Complex to implement but can scale to very long sequences.

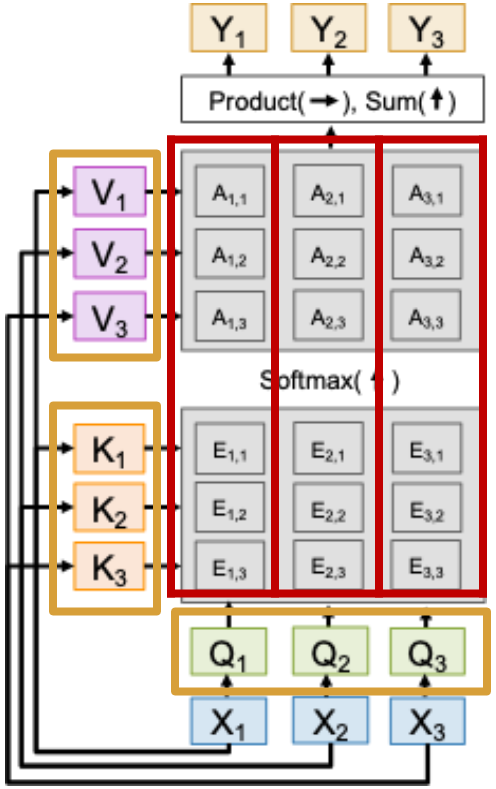


Liu et al, "Ring Attention with Blockwise Transformers for Near-Infinite Context", arXiv 2023

# Context Parallelism (CP)

- (Usually for Transformers)
- Idea: Transformers operate on S-length sequences. Use multiple GPUs to process a single long sequence
- QKV Projection: Same as MLP, parallelize over the sequence and sync gradients as in DP
- Attention operator: Hardest to parallelize
- (Option 2) Ulysses: Don't try to distribute attention matrix, instead parallelize over heads in multihead attention. Simpler, but max parallelism = number of heads

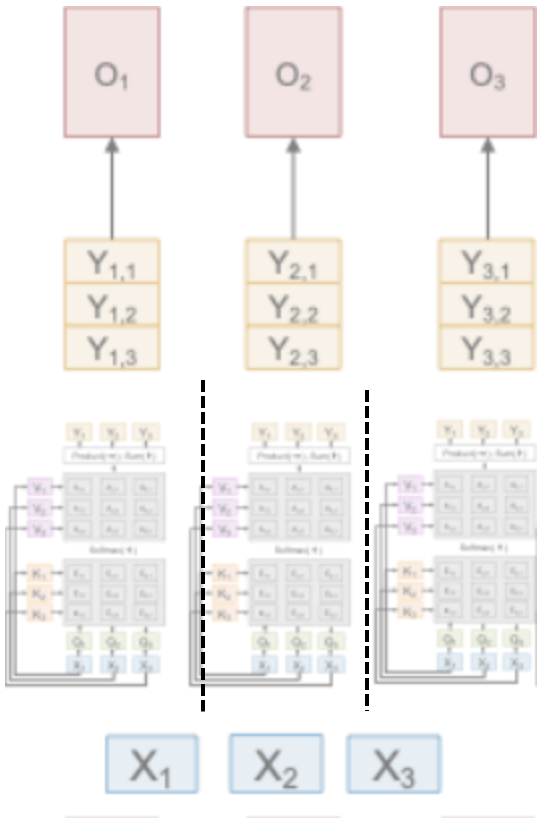


Jacobs et al, "DeepSpeed Ulysses: System Optimizations for Enabling Training of Extreme Long Sequence Transformer Models", arXiv 2023

# Context Parallelism (CP)

- (Usually for Transformers)

- Idea: Transformers operate on S-length sequences. Use multiple GPUs to process a single long sequence
- Often used for long-sequence finetuning. Example: Llama3-405B training:

- Stage 1: S=8192, no context-parallelism
- Stage 2: S=131,072, 16-way context-parallelism (8192 per GPU)

# How to train on lots of GPUs

- A model with $L$ layers operates on tensors of shape ($Batch$, $Sequence$, $Dim$)

- Data Parallelism (DP): Split on $Batch$ dimension
- Context Parallelism (CP): Split on $Sequence$ dimension
- Pipeline Parallelism (PP): Split on $L$ dimension

# Pipeline Parallelism (PP)

- Idea: Split the layers of the model across GPUs. Copy activations between layers at GPU boundaries.
- Problem: Sequential dependencies; GPUs are mostly sitting idle. Max MFU with N-way PP is 1/N
- Solution: Run multiple microbatches at the same time, pipeline them through the GPUs

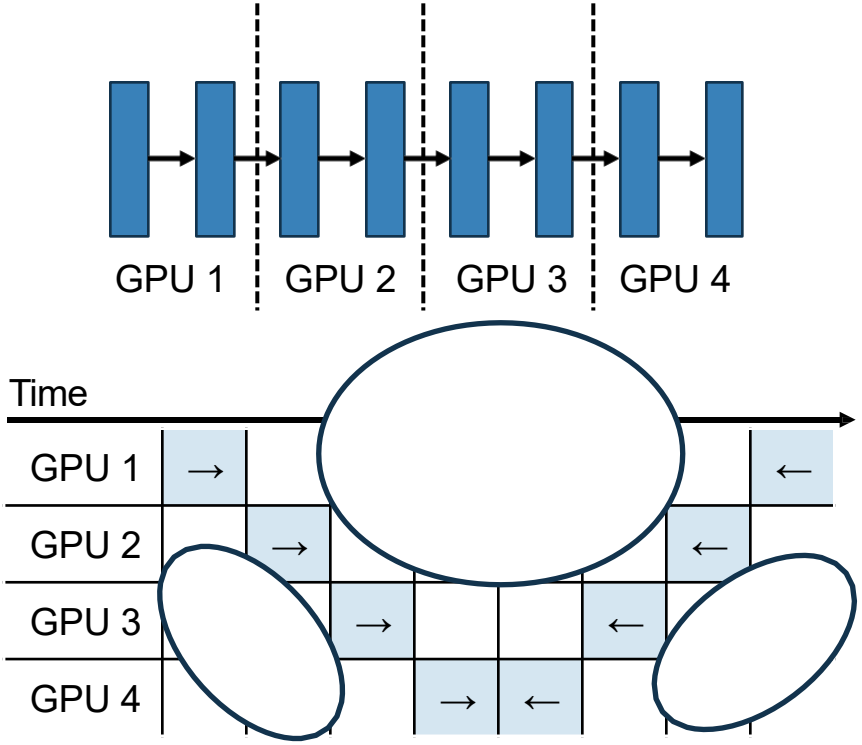


Huang et al, "Gpipe: Efficient Training of Giant Neural Networks using Pipeline Parallelism", arXiv 2018

# Pipeline Parallelism (PP) - Microbatches

- Idea: Split the layers of the model across GPUs. Copy activations between layers at GPU boundaries.
- Example:
- 4-way PP with 4 microbatches.
- Max MFU increases from 1/4 = 25%
- to 16/28 ≈ 57.1%

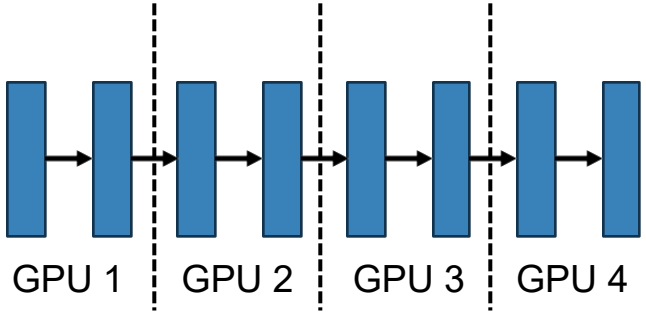


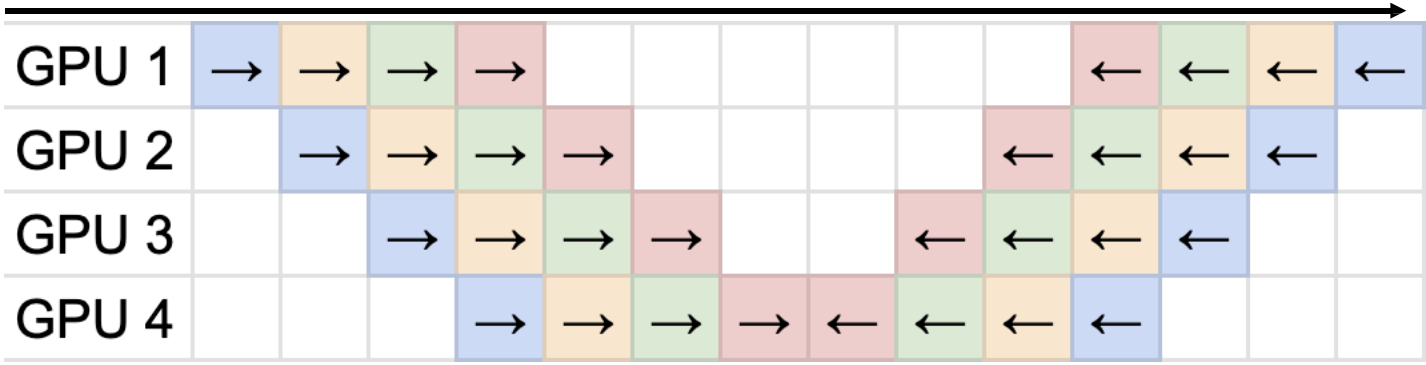


Huang et al, “Gpipe: Efficient Training of Giant Neural Networks using Pipeline Parallelism”, arXiv 2018

# How to train on lots of GPUs

- A model with $L$ layers operates on tensors of shape $(Batch, Sequence, Dim)$

- Data Parallelism (DP): Split on $Batch$ dimension
- Context Parallelism (CP): Split on $Sequence$ dimension
- Pipeline Parallelism (PP): Split on $L$ dimension
- Tensor Parallelism (TP): Split on $Dim$ dimension

# Tensor Parallelism (TP)

- Idea: Split the weights of each linear layer across GPUs, use block matrix multiply
- Problem: Need to gather parts of Y after forward, can't overlap with communication
- Trick: With 2 consecutive TP layers, shard first over row and second over column to avoid communication

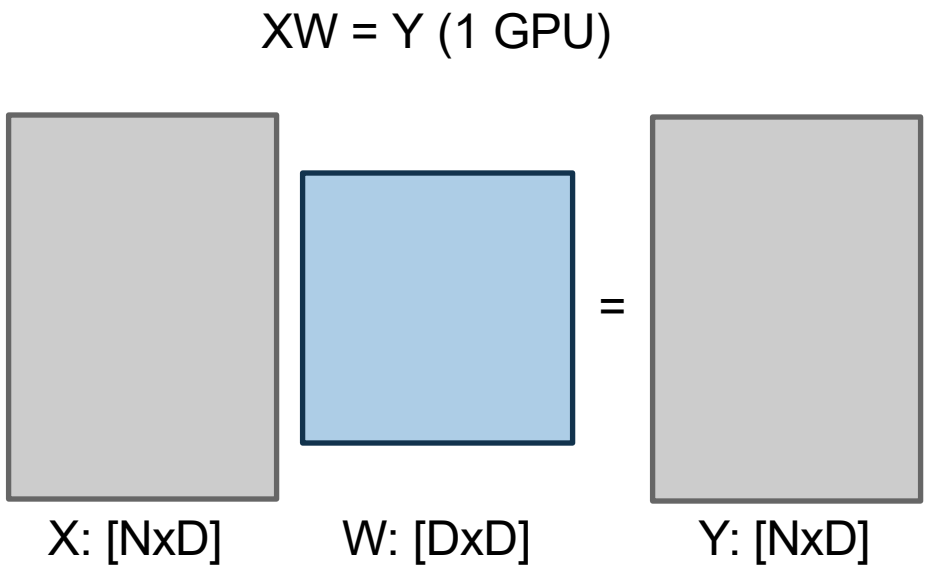


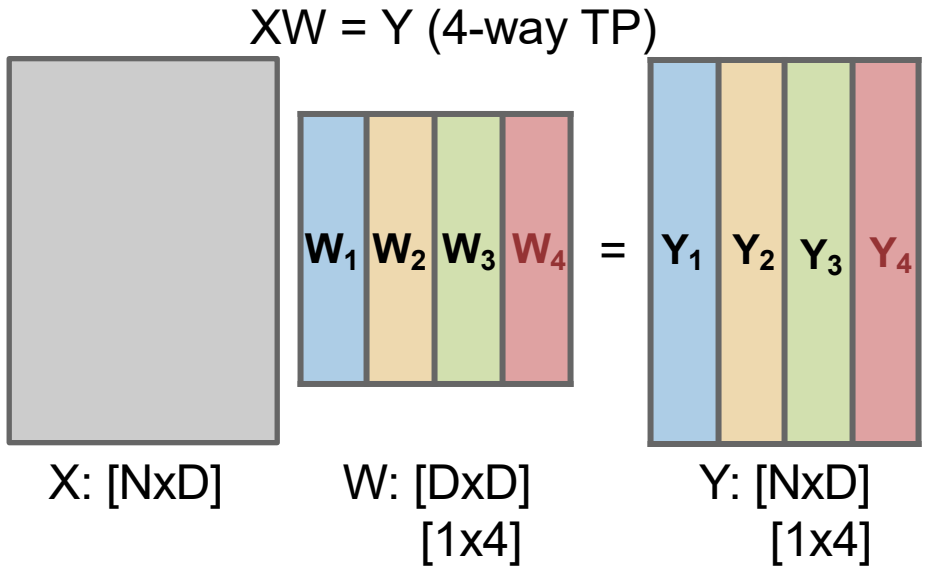


GPU i computes $XW_i = Y_i$

# Tensor Parallelism (TP) – Two Layers

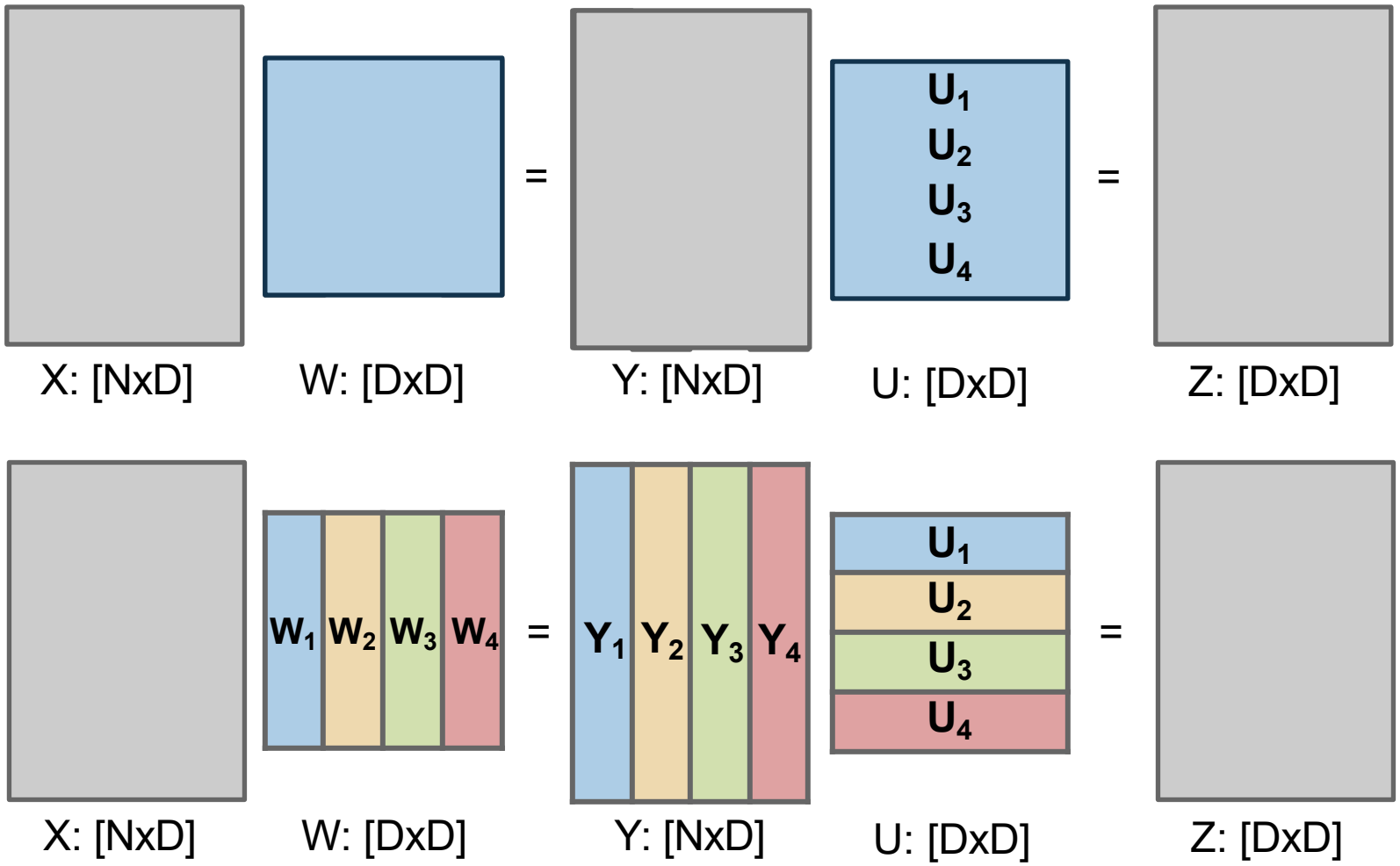


(4-way TP)
XW=Y (layer 1)
YU=Z (layer 2)

$Z = \mathbf{Y_1U_1} + \mathbf{Y_2U_2} + \mathbf{Y_3U_3} + \mathbf{Y_4U_4}$

GPU i computes
$XW_i = Y_i$

No need for communication after XW=Y! Each GPU computes one term of Z, then broadcasts to all other GPUs

GPU i computes
$Y_iU_i = Z_i$

| Block shapes: | [1x1] | [1x4] | [1x4] | [4x1] | [1x1] |
|---|---|---|---|---|---|

# In practice

- Which to use for largest models?
- All of them!
- Use TP, CP, PP, and DP all at the same time!
- Arrange GPUs in a 4D grid

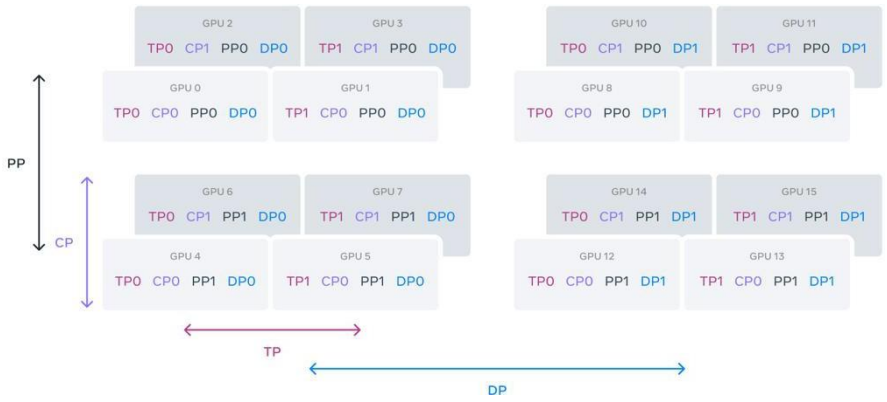


- GPUs index in the grid gives its rank along each parallelism dimension

Example: LLama3-405B

| GPUs | TP | CP | PP | DP | Seq. Len. | Batch size/DP | Tokens/Batch | TFLOPs/GPU | BF16 MFU |
|---|---|---|---|---|---|---|---|---|---|
| 8,192 | 8 | 1 | 16 | 64 | 8,192 | 32 | 16M | 430 | 43% |
| 16,384 | 8 | 1 | 16 | 128 | 8,192 | 16 | 16M | 400 | 41% |
| 16,384 | 8 | 16 | 16 | 8 | 131,072 | 16 | 16M | 380 | 38% |

- Optimize setup to maximize MFU

# Summary

- Inside a GPU
  - Example with NVIDIA H100
- How to train on lots of GPUs
  - Data Parallelism (DP): Split on $Batch$ dimension
  - Context Parallelism (CP): Split on $Sequence$ dimension
  - Pipeline Parallelism (PP): Split on $L$ dimension
  - Tensor Parallelism (TP): Split on $Dim$ dimension
- MFU: Tune parallelism recipe to maximize Model Flops Utilization (MFU)

# Reference

- CS231n from Standford