This full text paper was peer-reviewed at the direction of IEEE Instrumentation and Measurement Society prior to the acceptance and publication.

Smart Engine Speed Control System with ECU System Interface

Mohamed Afify
Department of Engineering & Physics
University of Central Oklahoma
Edmond, Ok, USA
mafify@uco.edu

Alaeddin S. A. Abuabed
Department of Engineering & Physics
University of Central Oklahoma
Edmond, Ok, USA
aabuabed@uco.edu

Nesreen Alsbou
Department of Engineering & Physics
University of Central Oklahoma
Edmond, Ok, USA
nalsbou@uco.edu

***Abstract*— Despite decades of reformative legislation regarding the safety of motorists and immense efforts by manufacturers to improve vehicle safety features, motor vehicle accidents related to speeding claim the lives of approximately 3000 teenagers (aged 16-19) each year. This study proposes an embedded smart control system to limit the vehicle speed to the maximum allowable road speed. This can be achieved by establishing a live communication between the cruise control system and the onboard GPS module. Using the Engine Control Unit (ECU) to control the electronic throttle and air valve, the maximum rotational velocity of the engine can be limited so that the vehicle's speed does not surpass a road speed limit. By implementing this embedded system to control the speed of the motor vehicle, this system has the potential to reduce the number of speeding-related accidents. This study evaluates the practicability of the proposed embedded system and discusses alternative controlling methods. For this purpose, a graphical user interface (GUI) module is also developed to make the system more user-friendly. The data used to test the system was collected through a GPS service from the streets around the campus of the University of Central Oklahoma.**

Keywords— Cruise control system, PID controller, GPS service, Simulink, Engine control unit, smart driving, internet of things,

I. INTRODUCTION

Cruise Control Systems are among the most powerful inventions in the modern mechanical systems. The cruise control theory relies on the idea of vehicle constant speed regulator that was invented in early 1900. The idea of the cruise control is based on maintaining the throttle angular position based on the engine load so the engine can secure a stable speed limit. This can be achieved by utilizing the driveshaft rotations on the road and positioning the throttle to maintain the vehicle speed at the referenced speed. The motor cruise control was later invented in 1948 but not commercialized until 1958. The demand on the vehicles equipped with cruise controllers increased in 1973. This increase in demand was driven by the increase in oil prices. A more sophisticated cruise control system was developed in 1992 by Mitsubishi Motors. This system allows for detecting the distance between vehicles and controlling the speed accordingly.

Nowadays, cars are designed with electromechanical throttles equipped with electric air valves (EAVs). A typical EAV gets an output signal from the Engine Control Unit (ECU) with fixed values to maintain the appropriate motor speed measured in revolutions-per-minute (RPM). The ECU is responsible for predicting the atmosphere the car is moving in and capable of maintaining the engine RPM to work in all conditions.

A new Cruise Control technology has been developed in 2013 by automakers to accommodate adaptive features, which resulted in the Adaptive Cruise Controller (ACC). The new features involve smart systems to monitors the surrounding atmosphere and controls the car accordingly. The control unit secures the speed of the car by adjusting the throttle according to the traffic. The modern technology behind the ACC is a radar system with low and high range to control the speed depending on the car [1]. Another innovation is the Cruise Control system design that relies on the Fuzzy PID technology. This technology will set the speed value by sending a signal to set the throttle valve and reduce the speed of the deviation of the valve plate which will regulate the vehicle speed [2].

This research paper introduces a smart embedded system that has the capability of communicating with the ECU and controlling the throttle position to limit the engine RPM. This can be realized by commanding the actuator to control the throttle so the speed will be controlled between an initial speed (typically zero) and a final speed (the road speed limit). In addition, a closed loop system with a PID controller is developed to control the actual throttle position that leads to the desired referenced speed. The PID controller will operate based on the information provided by an onboard GPS module. In return, the GPS module will detect the coordinates of the road and discover the speed limit of the road. This system also aims to control the behavior of the driver when attempting to bypass the embedded system and over speed the vehicle. Therefore, the proposed system is designed to host a GSM module to communicate with the registered number to alert about an attempt to bypass the system.

The simulated system architecture is implemented using a software design of MATLAB® Simulink to interface the throttle system and the PID controller. In addition, a micro C language is developed to control the embedded microchip. The system will have two communication devices that will collect data and send it to the module; a speedometer Vehicle Speed Sensor (VSS) and the GPS module. The VSS is usually located

XXX-X-XXXX-XXXX-X/XX/$XX.00 ©20XX IEEE

978-1-5386-2222-8/18/$31.00 ©2018 IEEE
Authorized licensed use limited to: Cheongju University. Downloaded on March 23,2026 at 22:29:18 UTC from IEEE Xplore. Restrictions apply.

in the transmission housing and will act as the feedback that reports the actual car speed to be compared with the reference speed provided by the GPS module. The PID controller will be implemented in the embedded system to control the input signal before it goes to the ECU. The PID controller is designed by Simulink suit to tune the proportional, integral and differential gains, k_P, k_I & k_D, of the controller from any error changes for every input.

II. System Description

The embedded system consists of a microcontroller that controls the GPS module, GSM module and an LCD screen for the user. The system controls the car intake/engine system that will be simulated by using the GUI to interface the implemented system as shown in Fig. 1.

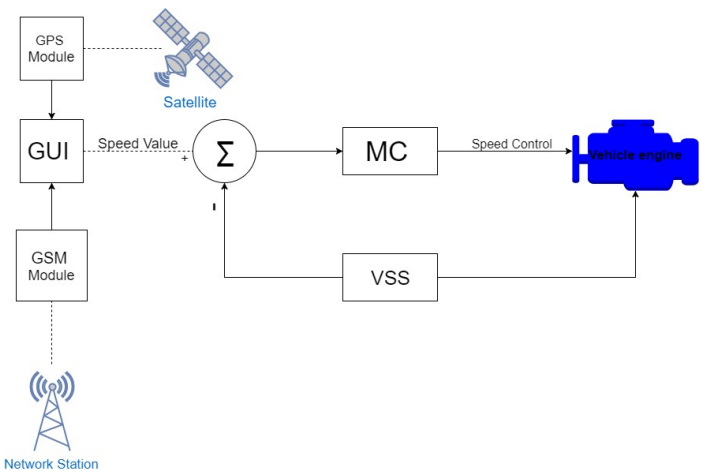

Fig. 1. Speed Control System Architecture

A. PIC18 Microchip

The PIC18 is microchip that hosts the microcontroller (MC) AN937. This chip is used to implement the PID system to control the ECU unit. The PID system is employed on a board with a 4 MHz clock, 4.7 kΩ resistor, two 22 pf capacitors, and a 7805 voltage regulator. To debug and burn the program on the microcontroller, we will use Pickit programmer to burn the code. The code is written in C language and it will be simulated and tested on proteus and debug by winpic800. The microcontroller has 5 main ports to communicate with the circuit.

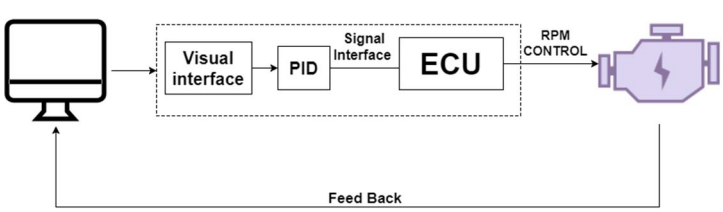

Fig. 2. Architecture of the MC rule

The microcontroller also has a Can BUS library to communicate with the ECU unit. A simple diagram showing the details of the MC unit is shown in Fig. 2.

B. Neo-6M GPS Module

The GPS Module will communicate with the Rx and Tx of the MC of the system to send commands. The main event of the system is to send the Coordinates of the vehicle location and, depending on the readings, it will limit the speed of the engine. The module is accurate in the serial data. According to the Neo-6M datasheet, the horizontal position accuracy is 2.5 m and the time pulse signal is 30 ns. The GPS Module is equipped with an antenna GPS 900-1 with a frequency of 1575.42 MHz to boost the power of signal to increase the accuracy of the Module [3].

C. SIM900 GSM Module

The module will play a role in monitoring the driver's behavior when attempting to disable the GPS module to bypass the speed-limiting controller. The GSM module is responsible for sending a signal, in the form of SMS message, to the cell phone associated with the module to alert about an attempt of disabling the service. This will help parents to monitor their teenager drivers and companies to monitor their business vehicle drivers [4].

D. LCD display

The display will alert the driver with the updates of the speed that the device is limiting the engine to. It will also display the current vehicle speed. The LCD is a graphics display for a 16 bit and 32 bit microcontrollers.

E. Power Supply

The system is operating at 5 volts. This voltage will be provided by the car battery. A 5 volts regulator will be used to make sure the system does not experience a delay in the case of any voltage drop or increase.

III. System Algorthim

The throttle is the main body of the vehicle electromechanical air intake system. The throttle is the responsible part of regulating the amount of air flowing into the combustion system. This is done in response to the gas accelerator pedal input. In this research effort, we propose using an Electronic Throttle Control (ETC) unit to electronically connect the accelerator pedal to the throttle. The ETC is directly operated by a DC drive motor and a gear box to control the position of the Valve plate as shown in Fig. 3. The PID controller will determine the reference throttle angle and send a signal to the ECU with a specific frequency to adjust the throttle plate. For this purpose, we developed a nonlinear PID control system, as the traditional PID will not provide the high precision of the plate control [5].

Authorized licensed use limited to: Cheongju University. Downloaded on March 23,2026 at 22:29:18 UTC from IEEE Xplore. Restrictions apply.

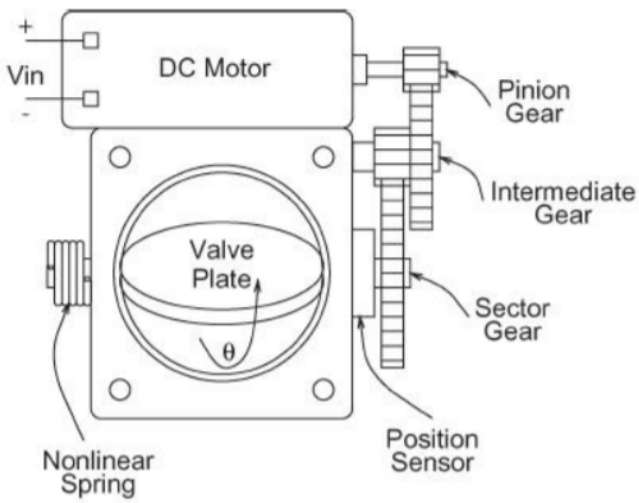

Fig. 3. ETC unit with Mechanical components

To control the electronic throttle through the mechanical parameters, we treated the throttle valve to have three acting torques; (1) the motor torque that operates the gearbox, (2) the spring torque that controls the plate, and (3) the damping torque that affects the mechanical system.

The system can be described mathematically using the questions [6]:

$$\begin{cases} M_{motor}(t) = \alpha C_s \\ M_{spring}(t) = -K_s(\varphi(t) - \varphi_{eq}) \\ M_{damping}(t) = -K_d\dot{\varphi}(t) \end{cases} \quad (1)$$

Equation (1) represents the torques of the motor, the spring, and the damping, respectively,
Where: K_s is the spring constant, K_D is a friction constant, and C_s is a torque. Where the differential equation in (2) represents the plate angle position of the electronic throttle with J is the throttle plate inertia.

$$\ddot{\theta}(t) = \frac{1}{J}\left[-K_s\big(\theta(t)\big) - \theta_{eq}\big) - K_d\dot{\theta}(t) + |\alpha C_s\right] \quad (2)$$

The PID communicates with the ECU unit which, in return, will regulate the throttle plate position. The throttle plate angle will be determined to provide a specific motor output RPM that leads to the desired vehicle speed in mile/hour. Therefore, the overall system is having two feedback-closed loops to continuously report the throttle angle position and the vehicle speed, as shown in Fig. 4.

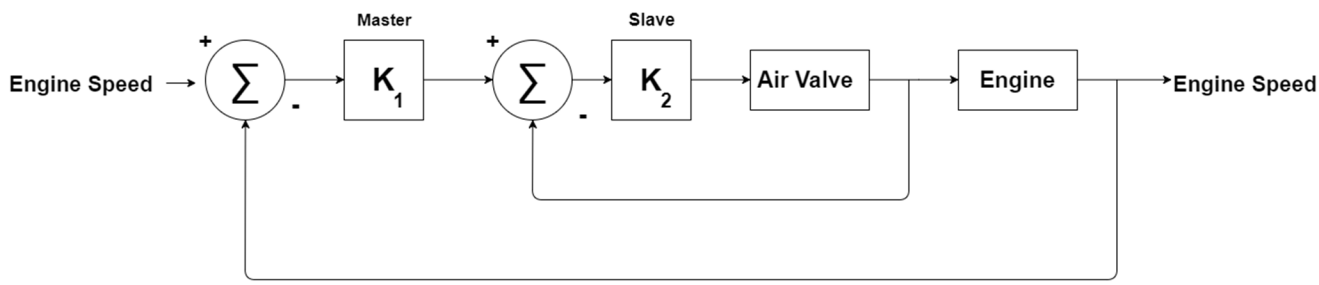

Fig. 4. Control system rule

IV. SYSTEM IMPLEMENTATION

A. PID Controller firmware Implementing

The Microcontroller that will control the system is AN937 [7], which is embedded in a pic18 microchip. This microchip has an implemented PID system. The PIC18 series Implemented code is fully functional system with a feedback that has the features needed in the Control unit. The PID functions that implemented in the system fits the simulations values of the calculated error and the PID interrupt. The firmware of the system can be modified to fit the embedded system as it receives an error in the range of percentage 0-100% (8-bit). The system has variable declarations of the proportional, integral and derivative that range between 0 and 15, the gain has a maximum of 8-bit with a max value of 255. The firmware is settled in the system through mathematical equations with a specific value that can be implemented by the software as shown in Fig. 5.

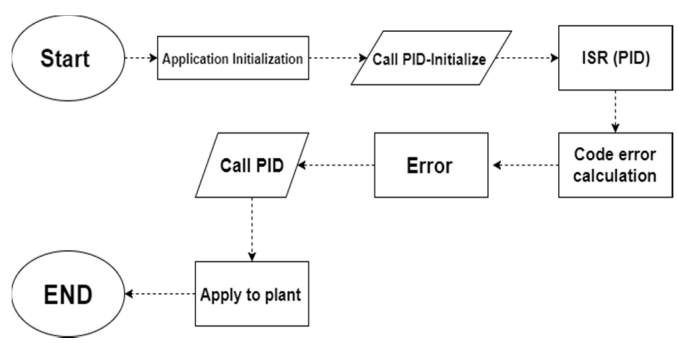

Fig. 5. PID firmware implementation

The proportional gain of the system is multiplied by the error and stored in a variable as in (4), and used later to calculate the overall value that is the output of the plate. The integral gain takes the past error and gets all the accumulative errors to add it up to another variable then it will have limits to

Authorized licensed use limited to: Cheongju University. Downloaded on March 23,2026 at 22:29:18 UTC from IEEE Xplore. Restrictions apply.

avoid any integral wind-up as shown in (5). The derivative gain is calculated in the same way of the integral gain but takes the difference of error between the recent and past one as in (6)

$$prop_o : prop_2 = K_p \times (error_o : error_1) \quad (4)$$
$$integ_o : integ_2 = K_i \times (a_{error_o} : a_{error_1}) \quad (5)$$
$$deriv_o : deriv_2 = K_d \times (d_{error_o} : d_{error_1}) \quad (6)$$

The embedded system tunes the PID controller through the firmware by checking when the errors are calculated, and it will indicate the loaded values in the system. The output is then calculated after the three gains are determined and they are added up and saved inside a variable that will drive the plant as shown in (7)

$$S_{Output} = prop_0 : prop_2 + integ_0 : integ_2 + deriv_0 : deriv_2 \quad (7)$$

B. GUI Interface

To test the proposed system with the electronic throttle, we used the engine speed model in the MATLAB that operates by taking throttle plate angle (in degrees) as an input and, through the car mechanical system, it converts it to engine speed, as shown in Fig. 6.

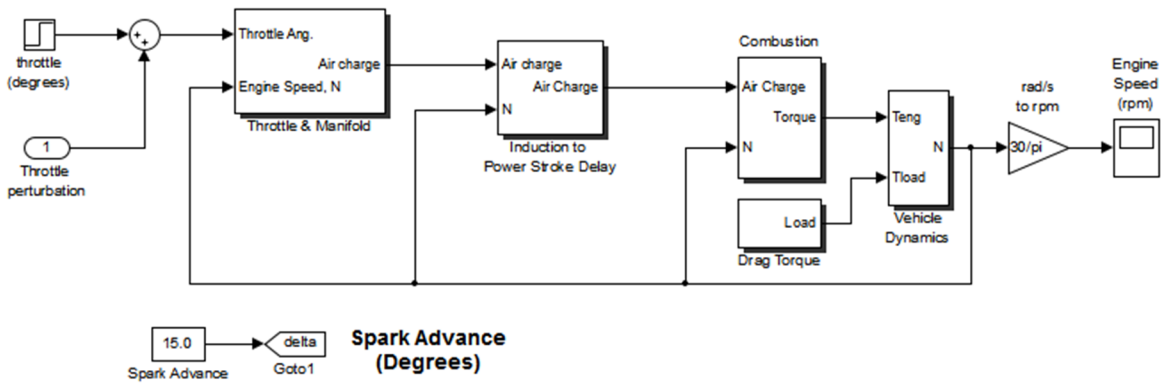

Fig.6. Engine Speed model using MATLAB Simulink

We planted the PID control system in the Model to act as a controller that will update the ECU to send the throttle angle value and get a feedback from the engine as shown in 7.

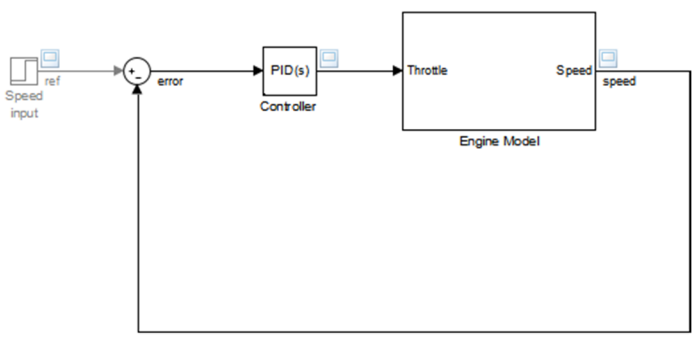

Fig. 7. PID control system

V. SIMULATION RESULTS

The proposed system takes a signal input and converts it into an angle position that limits the air flow through the engine to control the rpm of the car. To create a relation between the engine speed and the throttle position in degrees, we generated a linearization of an "engine speed model" through MATLAB to get the frequency values that operate the rpm values of the car engine, as shown in Fig. 8.

We tested the values based on three coordinate locations around the campus of the University of Central Oklahoma in Edmond, Oklahoma. A google map picture that shows the three test locations is shown in Fig. 9. The speed limit and the coordinates of the three test locations are reported in Table 1.

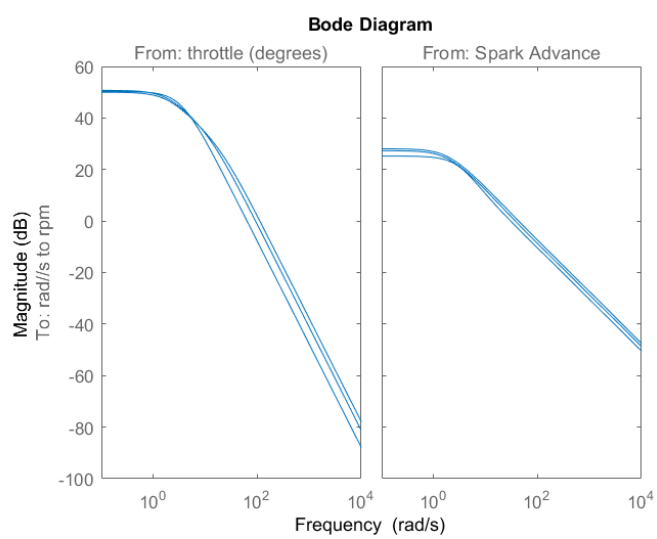

Fig. 8. Speed Model Linearization

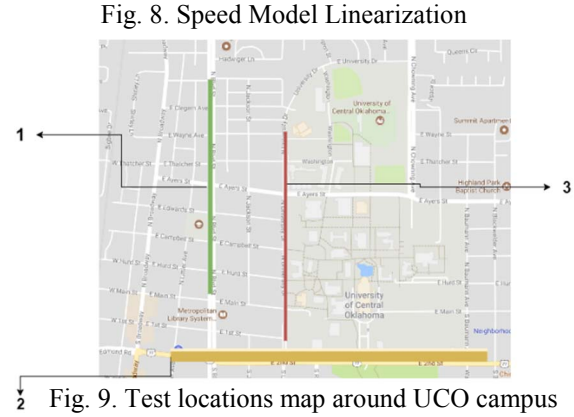

Fig. 9. Test locations map around UCO campus

Authorized licensed use limited to: Cheongju University. Downloaded on March 23,2026 at 22:29:18 UTC from IEEE Xplore. Restrictions apply.

Table 1. Test locations coordinates

Street no.	Coordinates
1 (45 mile/h)	35°39'27.3"N 97°28'41.9"W
2 (25 mile/h)	35°39'10.1"N 97°28'16.1"W
3 (60 mile/h)	35°39'30.1"N 97°28'30.2"W

To convert the speed limit values into rpm we used the equation (8) [6]

$$Vehicle_{speed}\left(\frac{miles}{hour}\right) = 0.00595 \times \frac{RPM.r}{R_1.R_2} \quad (8)$$

Where RPM is engine speed, r is the loaded tire radius, R1 is the transmission gear ratio, and R2 is the rear axle ratio.

For example, by calculating the parameters of a 2005 Honda Civic HX, the 3rd gear combination has the gear ratio of 1.241, the 4th gear is 0.970, and the differential drive is 4.412 [8]. The tire radius is 11 inches. Therefore, the values of the RPM are 5020 RPM at 60 mile/hour, 3770 RPM at 45 mile/hour and 2090 RPM at 25 miles/hour. We simulated the RPM values in the MATLAB to obtain the Throttle position values in degrees.

After evaluating the throttle angular position values, we implemented them in our GUI simulation to test the PID system and tune the gain values. Considering no PID tuning, the results of the desired and the actual engine speed (in RPM) are illustrated in Fig. 10.

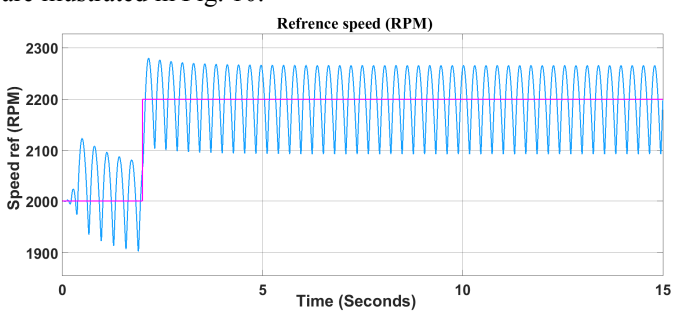

Fig. 10. Engine speed in RPM before tuning the PID

By tuning the PID controller to correct the overshoot and the oscillation of the output of the system, the following PID parameters are obtained, Kp = 0.006, Ki = 0.013, Kd = 0.00062 and N = 418.33 is a filter coefficient. The engine speed in RPM after tuning the PID is shown in Fig. 11.

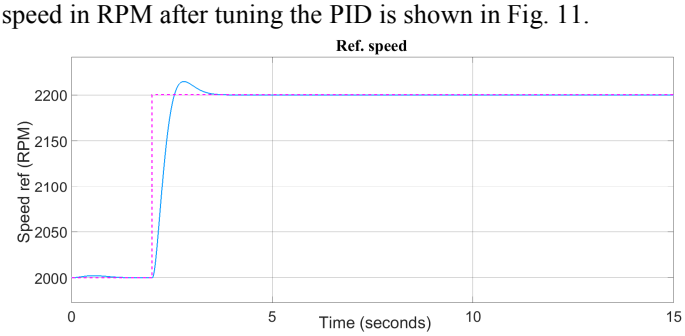

Fig. 11. Engine speed in RPM before tuning the PID

After tuning the PID controller, a spike in the throttle plate position was noticed before the system settled down, as in Fig. 12.

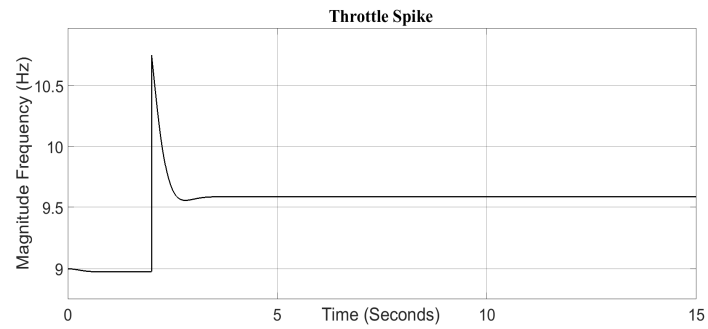

Fig. 12. A spike in the throttle plate position was noticed

By slowing the response time of the response, it reduced the spike and the throttle command had an acceptable output without a spike in the system, as shown in Fig. 13.

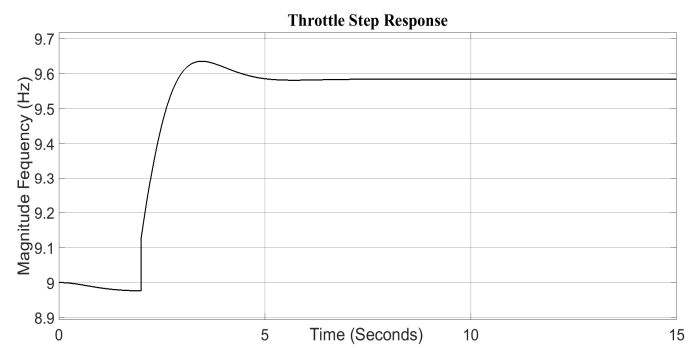

Fig. 13. An improved tuned throttle Step response

The tuned PID parameters simulated in the MATLAB are used in the system as a new subsystem that will linearize the values of the system, as shown in Fig. 14.

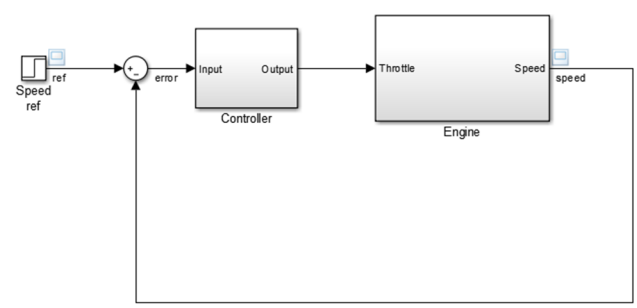

Fig. 14. Implemented controller system

We implemented the system in the GUI interface to simulate our main system. By implementing the coordinates of the vehicle location and using the maximum speed limit for that location, the system has proven to limit the speed to the maximum speed, as shown in Fig. 15

Authorized licensed use limited to: Cheongju University. Downloaded on March 23,2026 at 22:29:18 UTC from IEEE Xplore. Restrictions apply.

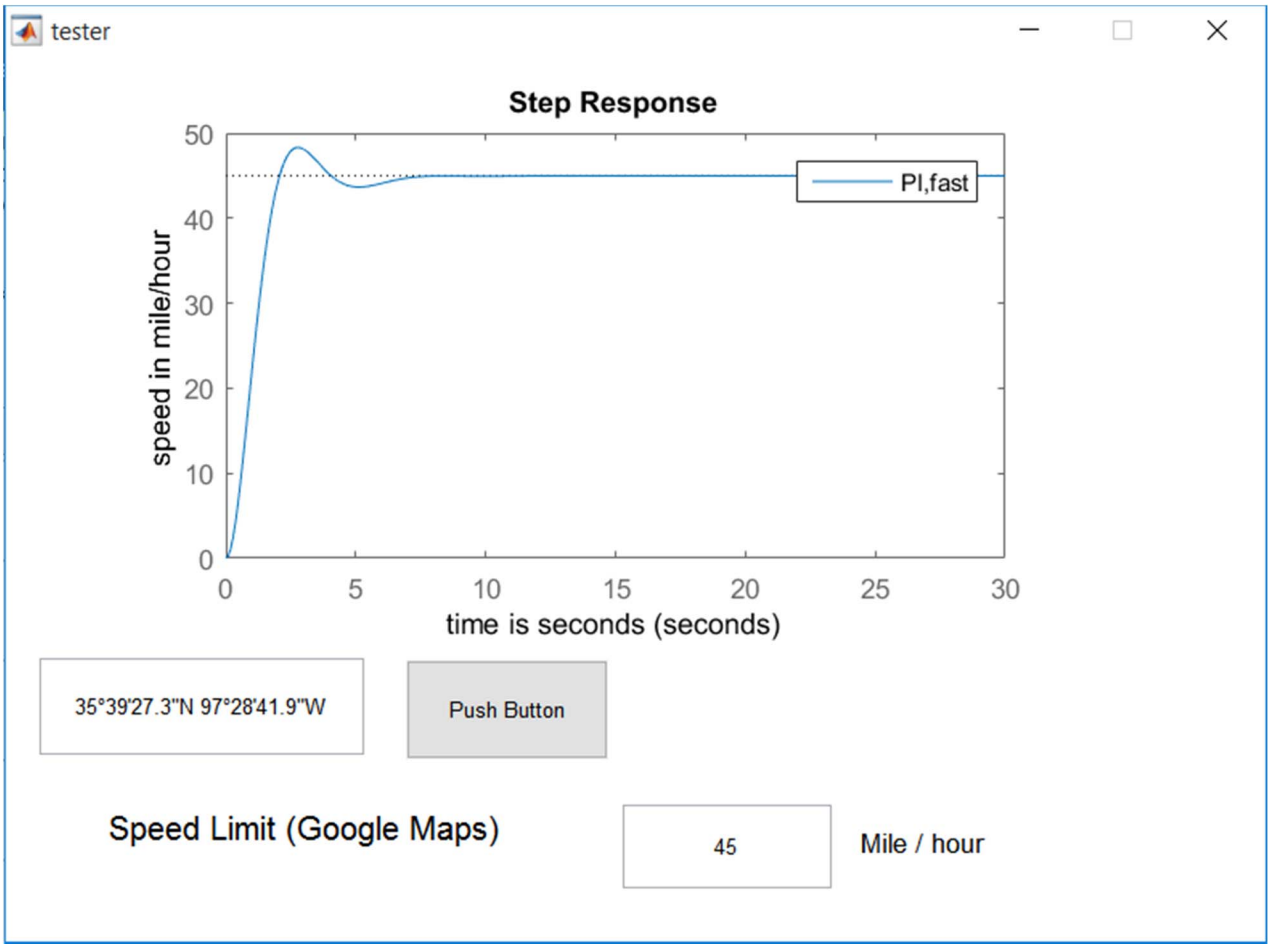

Fig.15. GUI interface of the system simulation

VI. Conclusion

This research paper presents an embedded smart cruise control system to limit the vehicle speed to the maximum allowable road speed. The paper has shown the feasibility of implementing this smart cruise control system by involving an onboard GPS module. Using the Engine Control Unit (ECU) to control the electronic throttle and air valve, the maximum rotational velocity of the engine can be limited so that the vehicle's speed does not surpass a road speed limit. By implementing this embedded system to control the speed of the motor vehicle, this system has the potential to reduce the number of speeding-related accidents. This study has revealed the practicability of the proposed embedded system and discussed the role of the electronic throttle in regulating the speed of the vehicle to the road limited speed. The graphical user interface used to compare the simulations with the referenced maximum speed. The results show that the system is stable and the steady state value of the response (or the actual vehicle speed) matches the reference speed. This promising project investigates a new technology in the speed controlling system that is equipped with smart modules. The system was simulated using MATLAB and data collected from three streets around the campus of the University of Central Oklahoma.

The team is now working on implementing the system and the hardware frame to road test it. This project aims to reduce car accidents and enhance the safety on the road.

References

[1] Bill Howard June 4, 2013. “What is adaptive cruise control, and how does itwork (www.extremetech.com/extreme/157172-what-is-adaptive-cruise-control-and-how-does-it-work/2).

[2] Qiu, C. (2014). A design of automobile cruise control system based on fuzzy PID. 2014 International Conference on Information Science, ElectronicsandElectricalEngineering.doi:10.1109/infoseee.2014.694811

[3] UBLOX,” Neo-6 6 GPS Module”, GPS.G6-HW-09005-E datasheet, Aug.2009 [Revised Dec. 2011]

[4] http://www.propox.com/download/docs/SIM900.pdf

[5] Q. Zeng and J. Wan, “Nonlinear PID control of electronic throttle valve,” 2011 International Conference on Electrical and Control Engineering, 2011.

[6] Loh, Robert N. K., Witt Thanom, Jan S. Pyko, and Anson Lee. "Electronic Throttle Control System: Modeling, Identification and Model-Based Control Designs." Engineering 05.07 (2013): 587-600. Web. 15 Nov. 2017.

[7] MICROSHIP, “Implementing a PID Controller Using a PIC18 MCU” AN937 Datasheet, 2004

[8] Speed versus RPM calculator,

wahiduddin.net/calc/calc_speed_rpm.htm.

“Honda Manual Transmission Specifications&Gear Ratios - Fuel Economy, Hypermiling, EcoModding News and Forum.” EcoModder wordmark,ecomodder.com/forum/showthread.php/hondamanualtransmission-specifications-gear-ratios 26279.html.

Authorized licensed use limited to: Cheongju University. Downloaded on March 23,2026 at 22:29:18 UTC from IEEE Xplore. Restrictions apply.