archive.today
webpage capture
Saved from https://levelup.gitconnected.com/top-large-language-models-llms-interview-q search
no other snapshots from this url
17 Sep 2023 17:16:15 UTC
All snapshots from host levelup.gitconnected.com
Webpage Screenshot
share download .zip report bug or abuse Buy me a coffee

Search Medium
Writ
Summarize
Chat With This Website

Member-only story

Top Large Language Models (LLMs) Interview Questions & Answers

Demystifying Large Language Models (LLMs): Key Interview Questions and Expert Answers

Youssef Hosni · Follow
Published in Level Up Coding · 42 min read · Sep 5

470 3

In data science and natural language processing engineering interviews, you can expect a variety of questions to assess your knowledge and skills related to large language models. These interviews often comprise a wide range of questions designed to evaluate your proficiency in handling large language models, understanding NLP fundamentals, and grasping the intricacies of Transformer-based architectures.

In this article, we will delve into the essential interview questions that you might encounter during your data science and NLP engineering interviews. We've categorized these questions into three distinct sections, each focusing on different aspects of NLP and large language models: NLP basics, Transformer-based inquiries, and large language model-specific queries.

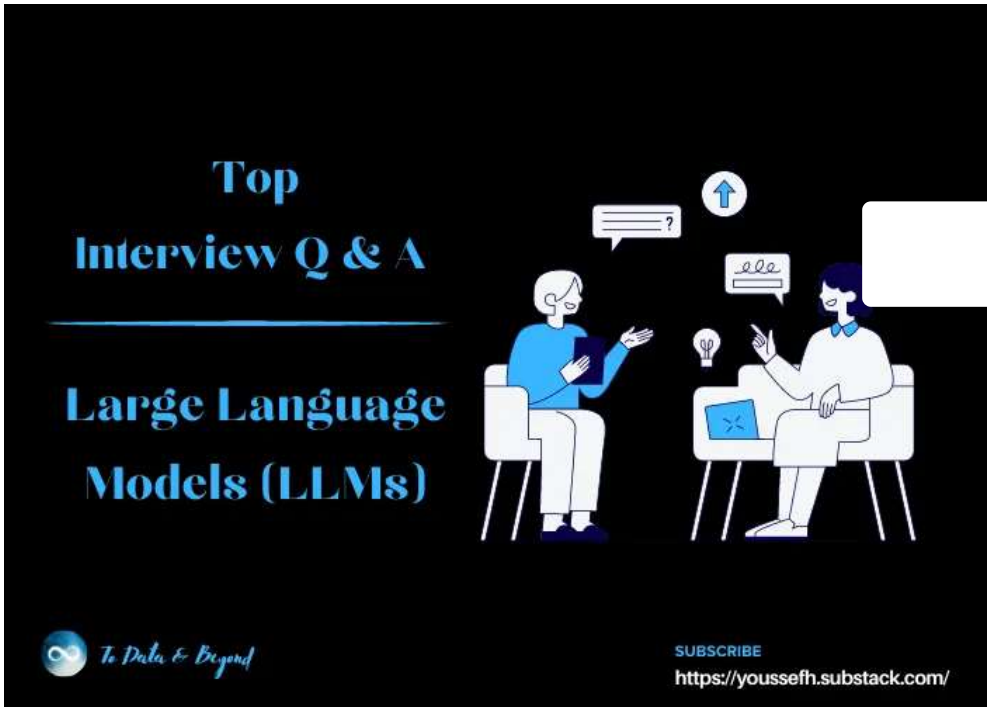

Table of Contents:

1. **NLP Basics Interview Questions & Answers**
   1.1. Describe the process of tokenization in NLP. Why is it important, and what challenges can arise during tokenization?
   1.2. How do you handle the problem of bias in NLP models, and what techniques can be used to mitigate it?
   1.3. What are the key evaluation metrics for assessing the performance of NLP models, especially in tasks like text classification and machine translation?
   1.4. Explain the concept of word embeddings, and how are they used in NLP models like Word2Vec and GloVe.
   1.5. Explain the concept of transfer learning in NLP and its importance in building effective NLP models.
   1.6. Can you discuss some common techniques for handling out-of-vocabulary (OOV) words in NLP tasks?
   1.7. How do you choose the appropriate architecture or model size for a specific NLP task?
   1.8. What are the differences between supervised, unsupervised, and semi-supervised learning in NLP, and when would you use each approach?
   1.9. In the context of NLP, what are some common techniques for text data preprocessing and cleaning?
   1.10. Describe some popular libraries and frameworks used for working with NLP tasks, such as spaCy, NLTK, or Hugging Face Transformers.
   1.11. Explain the concept of sequence-to-sequence models in NLP and

their applications, especially in tasks like language translation and text summarization.

2. **Transformer-Based Interview Questions &Answers**
   2.1. Explain the Transformer architecture and its significance in NLP.
   2.2. What is the purpose of attention mechanisms in Transforme models, and how do they work?
   2.3. Can you provide an overview of the attention mechanism's evolution, from the original Transformer to more recent variations like BERT and GPT models?

3. **Large Language Models Questions & Answers**
   3.1. Can you explain how a large language model like GPT-3 works, and what are some of its key applications and limitations?
   3.2. What is the difference between pre-training and fine-tuning in the context of large language models like BERT or GPT-3?
   3.3. What are the limitations of large language models like GPT-3, and how can those limitations be addressed?

1. NLP Basics Interview Questions & Answers

1.1. Describe the process of tokenization in NLP. Why is it important, and what challenges can arise during tokenization?

Answer:

Tokenization is a fundamental preprocessing step in Natural Language Processing (NLP) that involves breaking down text into smaller units, called tokens. Tokens are typically words, subwords, or characters, and they serve as the building blocks for various NLP tasks.

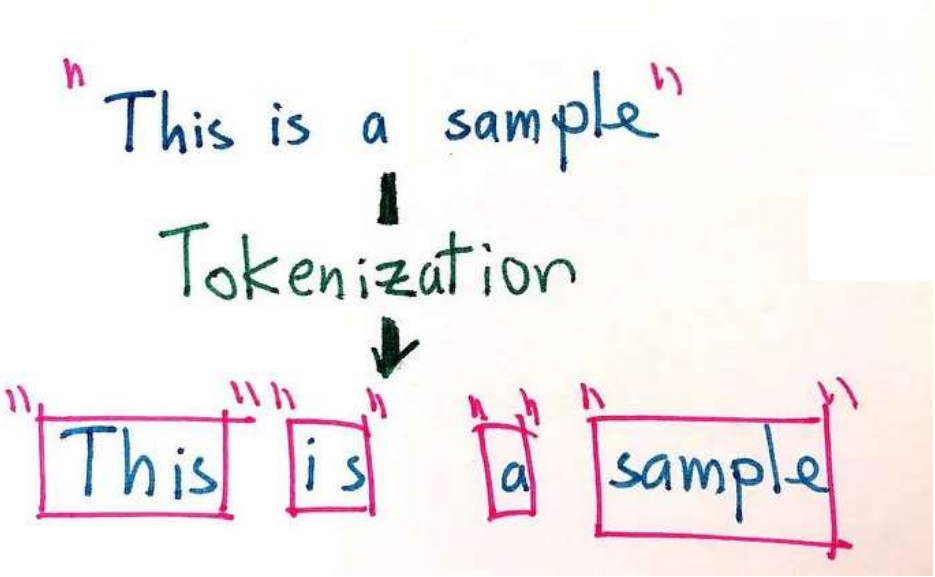

Here's an overview of the tokenization process, its importance, and the challenges that can arise:

Tokenization Process:

1. ***Text Input***: The process begins with a raw text input, which could be a sentence, paragraph, or entire document.
2. ***Sentence Splitting***: In some cases, the text may be split into sentences, especially when dealing with tasks like text summarization or sentiment analysis at the sentence level.
3. ***Word Tokenization***: The primary step involves breaking the text into word-level tokens. Words are separated by spaces or punctuation marks. For example, the sentence "I love NLP!" would be tokenized into ["I", "love", "NLP", "!"].
4. ***Subword Tokenization (optional)***: In cases where a vocabulary may not cover all words (e.g., rare or out-of-vocabulary words), subword tokenization methods like Byte-Pair Encoding (BPE) or WordPiece are used to break words into smaller units or subword tokens.
5. ***Character Tokenization (optional)***: In some scenarios, character-level tokenization may be employed, where each character is treated as a token. This can be useful for tasks like text generation.

Importance of Tokenization:

1. ***Text Processing***: Tokenization is a crucial step for text processing because it structures the text data into units that can be manipulated and analyzed

more easily.

2. *Feature Extraction*: Tokens serve as the basis for extracting features from text, enabling the use of machine learning algorithms for NLP tasks.
3. *Vocabulary Management*: Tokenization is closely tied to vocabulary management, as tokens correspond to entries in the vocabulary embeddings.
4. *Language Understanding*: It helps in understanding the syntactic and semantic structure of the text, which is essential for many NLP tasks like part-of-speech tagging, named entity recognition, and sentiment analysis.

Challenges in Tokenization:

1. *Ambiguity*: Some words may have multiple meanings or be part of different phrases, leading to ambiguity during tokenization. For instance, “book” can refer to a noun or a verb.
2. *Contractions and Apostrophes*: Words with contractions and possessive forms can be challenging. For example, “can’t” could be tokenized as “can” and “’t” or as a single token “can’t.”
3. *Hyphenated Words*: Words with hyphens, such as “state-of-the-art,” pose a challenge as they can be tokenized differently depending on the context.
4. *Languages with No Spaces*: In languages like Chinese and Japanese, words are not separated by spaces, making word tokenization more complex.
5. *Out-of-Vocabulary (OOV) Words*: Tokenization may not handle OOV words well, especially when using fixed vocabularies or subword tokenization methods.
6. *Domain-Specific Jargon*: Tokenizing domain-specific terms and jargon correctly can be challenging, as they may not appear in standard language models’ vocabularies.
7. *Special Characters*: Tokenization of special characters, emojis, or code snippets can require specialized handling.

Addressing these challenges often involves using advanced tokenization techniques, customizing tokenizers for specific tasks, or employing subword tokenization methods like Byte-Pair Encoding or WordPiece to handle OOV words and linguistic nuances more effectively. Tokenization is a critical preprocessing step in NLP, and its accuracy can significantly impact the performance of downstream NLP tasks.

1.2. How do you handle the problem of bias in NLP models, and what techniques can be used to mitigate it?

Answer:

Handling bias in NLP models is a critical ethical and technical chall
Bias can arise from the training data and language used, reflecting
cultural, and historical biases present in the text corpora. Addressi
important to ensure fairness and equity in NLP applications. Here are some techniques and strategies to mitigate bias in NLP models:

1. Diverse and Representative Training Data:

- Use diverse and representative training data that covers a wide range of demographics, cultures, and languages.
- Over-sample underrepresented groups to ensure equal representation.

2. Bias-Aware Preprocessing:

- Conduct bias-aware data preprocessing to identify and mitigate biased language and terms in the text.
- Remove or neutralize potentially biased words and phrases.

3. Debiasing Techniques:

- Apply debiasing techniques during pre-processing or post-processing to reduce bias in the data.
- One common approach is to reweight training examples or modify embeddings to reduce bias along specific dimensions.

4. Fairness Metrics:

- Use fairness metrics to quantitatively measure bias in model predictions, such as disparate impact, equal opportunity, and statistical parity.
- Continuously monitor these metrics during model development and deployment.

5. Bias Auditing:

- Conduct bias audits to assess the model's performance on different demographic groups.

- Investigate cases where the model exhibits bias and take corrective actions.

6. Fair Data Annotation:

- Ensure that data annotation is performed by diverse and unbiased annotators who follow guidelines to avoid introducing bias.

7. Contextualization:

- Consider the context of language use. A term may be neutral in one context but biased in another.
- Use contextual embeddings like BERT to capture context-sensitive information.

8. Human-in-the-Loop:

- Involve human reviewers to evaluate model outputs and make judgments regarding potential bias.
- Implement feedback loops to continuously improve the model's fairness.

9. Mitigate Stereotyping:

- Develop models that actively avoid stereotyping or reinforce positive stereotypes.
- Encourage inclusive language use.

10. Bias Reporting Mechanisms:

- Implement mechanisms for users to report and provide feedback on biased model outputs.
- Address reported issues promptly.

11. Education and Sensitization:

- Educate developers, data scientists, and reviewers about bias and its implications.
- Sensitize teams to potential bias pitfalls.

12. Transparency and Documentation:

- Document the data sources, preprocessing steps, and any bias mitigation techniques used during model development.
- Make model behavior transparent and interpretable.

13. External Auditing:

- Engage external auditors or third-party organizations to assess the fairness of your models independently.

14. Regular Re-Evaluation:

- Regularly re-evaluate and retrain models with new data to ensure that they remain fair and unbiased.

15. Legal and Ethical Compliance:

- Ensure compliance with relevant legal and ethical guidelines, such as anti-discrimination laws and privacy regulations.

It's important to note that addressing bias in NLP models is an ongoing process that requires continuous vigilance and improvement. No single technique can completely eliminate bias, but a combination of these approaches can help reduce bias and promote fairness in NLP applications. Additionally, interdisciplinary collaboration between NLP researchers, ethicists, and domain experts is crucial to effectively address bias in NLP models.

1.3. What are the key evaluation metrics for assessing the performance of NLP models, especially in tasks like text classification and machine translation?

Answer:

Evaluating the performance of Natural Language Processing (NLP) models is crucial to assess their effectiveness in various tasks. The choice of evaluation metrics depends on the specific NLP task you are working on. Here are some key evaluation metrics commonly used for assessing the performance of NLP models in tasks like text classification and machine translation:

Text Classification Metrics:

1. *Accuracy*: It measures the proportion of correctly classified instances out of the total. However, accuracy can be misleading when dealing with

imbalanced datasets.

2. ***Precision***: Precision calculates the ratio of true positive predictions to the total positive predictions made by the model. It is particularly important when minimizing false positives is crucial.
3. ***Recall***: Recall measures the ratio of true positive predictions to t actual positives. It is essential when you want to ensure that as n positives as possible are captured.
4. ***F1-Score***: The F1-score is the harmonic mean of precision and recall. It balances both metrics and is useful when you want to strike a balance between precision and recall.
5. ***AUC-ROC***: ROC curves visualize the trade-off between true positive rate and false positive rate at different classification thresholds. AUC-ROC quantifies the overall performance of the model, especially in binary classification.

Machine Translation Metrics:

1. ***BLEU (Bilingual Evaluation Understudy):*** BLEU measures the quality of machine-generated translations by comparing them to reference translations. It is based on precision, capturing how many n-grams in the machine-generated output match those in the reference translations.
2. ***METEOR (Metric for Evaluation of Translation with Explicit ORdering):*** METEOR is another metric that considers precision, recall, stemming, and synonymy. It also includes a penalty for unigram recall.
3. ***ROUGE (Recall-Oriented Understudy for Gisting Evaluation):*** ROUGE measures the similarity of machine-generated text to reference text in terms of n-gram overlap, word overlap, and other metrics. It is often used in text summarization and machine translation tasks.
4. ***CIDEr (Consensus-based Image Description Evaluation):*** CIDEr evaluates the quality of image captions or text generation tasks by comparing the similarity between generated text and human-generated references.
5. ***TER (Translation Edit Rate):*** TER calculates the minimum number of edits (insertions, deletions, substitutions) required to change the machine-generated translation into the reference translation.
6. ***WER (Word Error Rate):*** WER measures the number of word-level errors in the machine-generated translation compared to the reference.

7. *PER (Position-independent Error Rate):* Similar to WER, PER is a metric used to evaluate the quality of automatic speech recognition (ASR) systems.

The choice of evaluation metric should align with the specific goals characteristics of your NLP task. For example, in text classification, might prioritize precision and recall if false positives and false negatıves have different consequences, while in machine translation, BLEU is commonly used to assess translation quality. It's also important to consider domain-specific metrics and subjective evaluation when necessary, especially for tasks where human judgment plays a crucial role in determining success.

1.4. Explain the concept of word embeddings, and how are they used in NLP models like Word2Vec and GloVe.

Answer:

Word embeddings are a fundamental technique in NLP that transforms words or tokens into dense vector representations in a continuous vector space. These embeddings capture semantic and syntactic information about words, enabling NLP models to work with words in a more meaningful and computationally efficient way. Word embeddings have become a cornerstone in various NLP applications, and they are used to represent words in models like Word2Vec and GloVe (Global Vectors for Word Representation).

1. **Word Embeddings Concept:**

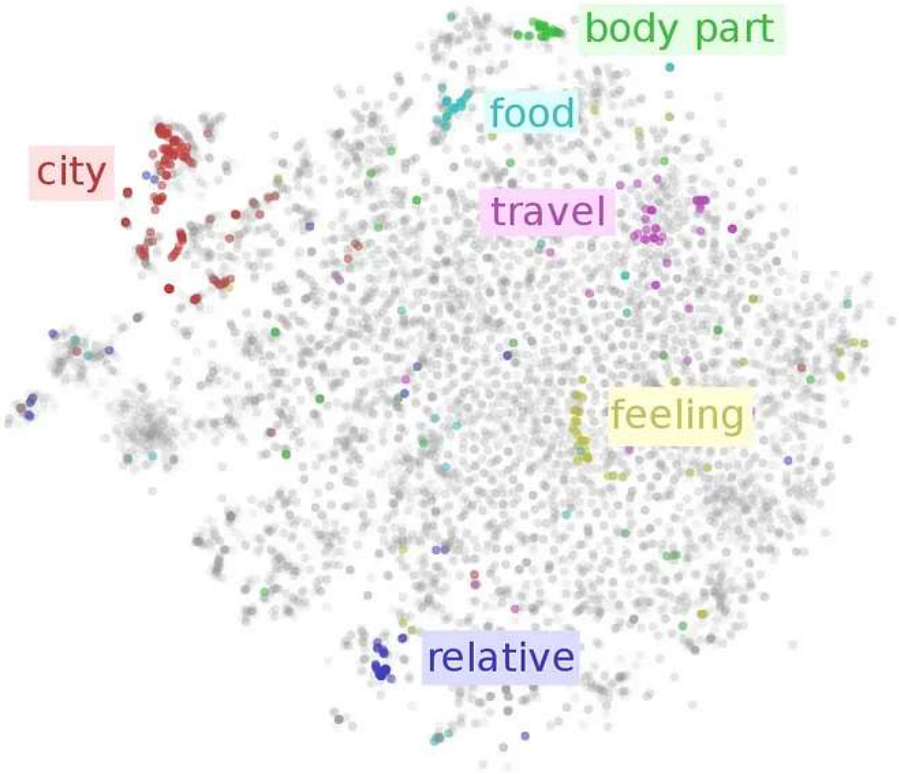

Word embeddings are numerical representations of words in a continuous vector space. The key idea is that words with similar meanings or usage patterns in a given context should have similar vector representations, meaning their embeddings should be close together in the vector space. Conversely, words with different meanings or usage patterns should have dissimilar embeddings, meaning they are farther apart in the vector space.

Word embeddings capture semantic relationships between words, such as analogies ("king" — "man" + "woman" ≈ "queen") and contextual similarity ("apple" and "fruit" have similar embeddings when used in a fruit-related context).

2. Word2Vec:

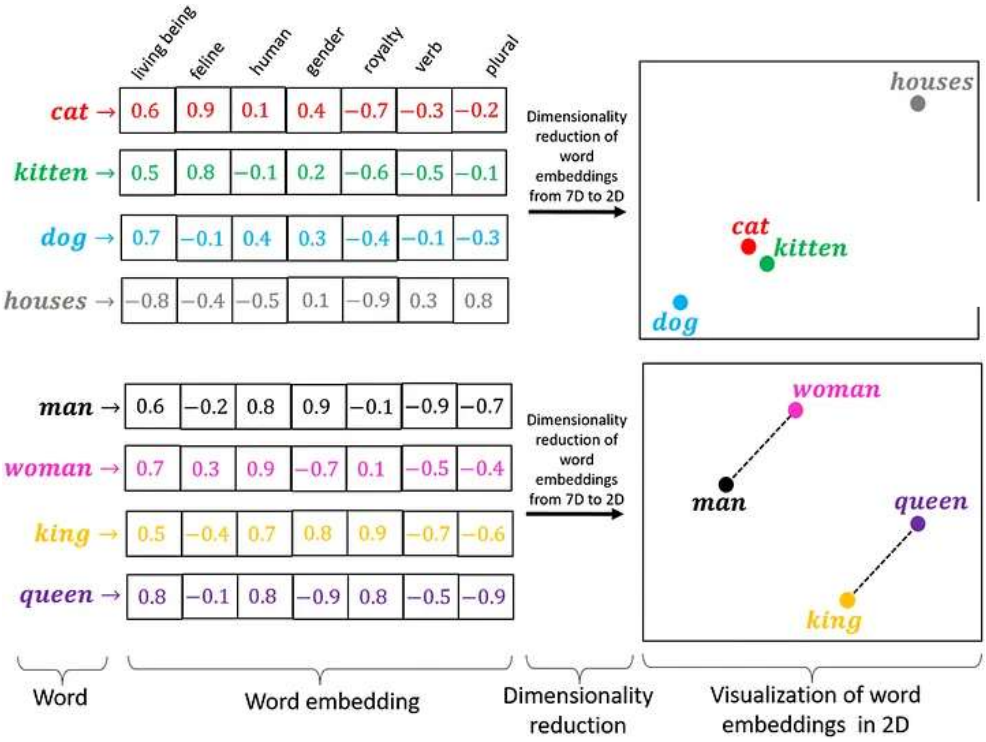

Word2Vec is a popular word embedding technique introduced by Tomas Mikolov and his team at Google in 2013. Word2Vec offers two main approaches to learning word embeddings:

1. **Continuous Bag of Words (CBOW)**: CBOW predicts a target word based on the context words surrounding it. It learns to represent words by training the model to minimize the difference between the predicted word and the actual target word.
2. **Skip-gram**: Skip-gram predicts context words based on a target word. It learns to represent words by training the model to predict the context words given a target word.

Word2Vec models are shallow neural networks with one hidden layer, and they can be trained efficiently on large text corpora. The resulting word vectors capture word similarity and are widely used in various NLP tasks, such as text classification, sentiment analysis, and machine translation.

3. GloVe (Global Vectors for Word Representation):

GloVe is another popular word embedding method introduced by researchers at Stanford University. Unlike Word2Vec, which is based on neural networks, GloVe is based on matrix factorization techniques. The key idea behind GloVe is to build a global co-occurrence matrix that captures word-word co-occurrence statistics in a large corpus.

The main steps in GloVe's training process include:

1. Constructing a Co-Occurrence Matrix: Count the co-occurrence of words within a specific context window in the corpus to build a word-word co-occurrence matrix.
2. Defining a Loss Function: Define a loss function that measures t difference between the dot product of word embeddings and the logarithm of the word co-occurrence probabilities.
3. Optimizing the Loss Function: Use optimization techniques to minimize the loss function and learn the word embeddings.

GloVe's embeddings are based on global statistics, making them particularly effective at capturing semantic relationships between words, such as word analogies and synonymy.

Both Word2Vec and GloVe produce high-dimensional word embeddings, typically with hundreds of dimensions. These embeddings can be used as features for downstream NLP tasks, enabling models to understand and work with the semantic and syntactic characteristics of words in a continuous vector space, which often leads to improved performance in various NLP applications.

1.5. Explain the concept of transfer learning in NLP and its importance in building effective NLP models.

Answer:

Transfer learning is a machine learning paradigm where a model trained on one task or dataset is adapted or fine-tuned to perform a different but related task.

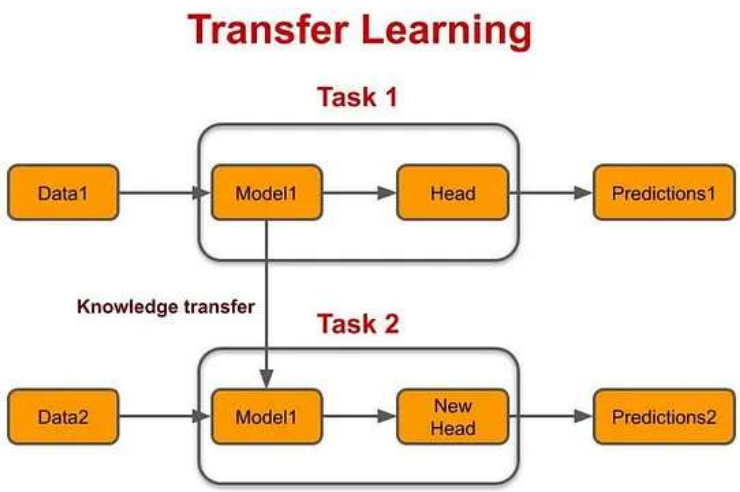

In Natural Language Processing (NLP), transfer learning has played a transformative role by leveraging pre-trained language models to boost the performance of various NLP tasks. Here's an explanation of the concept and its importance:

1. Concept of Transfer Learning in NLP:

In NLP, transfer learning involves pre-training a language model on a large corpus of text data and then fine-tuning it on a specific downstream task. The pre-trained model, often referred to as a "base model" or "pre-trained model," learns rich linguistic representations of words, phrases, and sentences. These learned representations capture semantic, syntactic, and contextual information from the text.

The fine-tuning process adapts the pre-trained model to the target task by updating its parameters using task-specific data. This fine-tuned model can then be used to make predictions or perform tasks like text classification, named entity recognition, sentiment analysis, machine translation, and more.

2. Importance of Transfer Learning in NLP:

1. *Efficient Use of Data*: Large-scale pre-training allows models to learn general language understanding from vast text corpora. This is especially beneficial when labeled data for a specific task is limited, as the model can leverage its general language knowledge.
2. *Improved Performance*: Transfer learning has consistently led to significant performance improvements in NLP tasks. Pre-trained models

capture a wide range of linguistic features, reducing the need for extensive task-specific feature engineering.

3. *Reduced Computational Cost*: Training large-scale language models from scratch requires substantial computational resources. Transfer learning allows for the reuse of pre-trained models, reducing the comput cost for downstream tasks.
4. *Faster Development*: Fine-tuning pre-trained models for specific tasks is typically faster than developing custom architectures for each task. It accelerates the model development cycle.
5. *Interpretable Representations*: Transfer learning can result in more interpretable word embeddings and contextual representations, which can enhance model understanding and interpretability.
6. *Domain Adaptation*: Pre-trained models can be fine-tuned on domain-specific data to adapt to particular industries or domains, making them highly versatile.
7. *State-of-the-Art Results*: Many state-of-the-art NLP models and solutions, such as BERT, GPT-3, and T5, are built using transfer learning techniques. These models have demonstrated groundbreaking performance across a wide range of NLP tasks.
8. *Continual Learning*: Transfer learning supports continual learning scenarios where models can be updated and improved over time as new data becomes available.

1.6. Can you discuss some common techniques for handling out-of-vocabulary (OOV) words in NLP tasks?

Answer:

Handling out-of-vocabulary (OOV) words is a common challenge in Natural Language Processing (NLP) tasks. OOV words are words that are not present in the vocabulary or word embeddings used by a model. Dealing with OOV words is crucial because encountering such words during inference can lead to model errors. Here are some common techniques for handling OOV words in NLP tasks:

1. Fallback to a Special Token:

- Reserve a special token (e.g., `<UNK>`) in the vocabulary to represent OOV words. When an OOV word is encountered during tokenization, replace it with this special token.

2. Character-Level Embeddings:

- Represent OOV words at the character level by breaking them down into individual characters or subword units (morphemes). Use character-level embeddings or subword embeddings (e.g., Byte-Pair Encoding, WordPiece) to capture their meaning and context.

3. Subword Tokenization:

- Use subword tokenization techniques like Byte-Pair Encoding (BPE) or WordPiece to tokenize text into smaller subword units. This reduces the chances of encountering OOV words because most subword units are shared across words.

4. Spell Correction/Completion:

- Apply spell correction or completion algorithms to OOV words to transform them into known words. Techniques like Levenshtein distance or language model-based correction can be helpful.

4. Synonym Mapping:

- Maintain a list of synonyms or word mappings in your application and replace OOV words with their closest synonyms or mapped words.

5. Dictionary-Based Expansion:

- Use an external dictionary or knowledge base to expand OOV words. For example, you can use WordNet or Wikipedia to find synonyms or related words for OOV terms.

6. Embedding Alignment:

- Align the pre-trained word embeddings with your task-specific data. You can use techniques like retrofitting or post-processing to make OOV words more similar to in-vocabulary words.

7. Contextual Word Embeddings:

- Utilize contextual word embeddings like ELMo, BERT, or GPT, which can handle OOV words by taking into account their context in the sentence.

8. Zero-Shot Learning:

- Use zero-shot or few-shot learning techniques to adapt the model to OOV words by providing a few examples of the OOV class during inference.

9. Ensemble Models:

- Combine multiple models with different tokenization strategies or vocabularies, including one with a rich vocabulary and another specialized in handling OOV words.

10. Data Augmentation:

- Augment your training data with variations of OOV words, creating synthetic examples that the model can learn from.

11. Adaptive Vocabulary Expansion:

- Dynamically expand the model's vocabulary during training by adding OOV words encountered during data preprocessing or tokenization.

12. Retraining:

- Periodically retrain your NLP model with updated data to incorporate new words into the vocabulary and embeddings.

The choice of OOV handling technique depends on the specific NLP task, the characteristics of your data, and the resources available. In many cases, a combination of these techniques may be necessary to effectively address OOV words and improve the robustness of NLP models, especially in real-world applications where encountering new and unexpected terms is common.

1.7. How do you choose the appropriate architecture or model size for a specific NLP task?

Answer:

Choosing the appropriate architecture or model size for a specific NLP task is a crucial decision, as it can significantly impact the performance and efficiency of your model. The choice depends on several factors, and here's a step-by-step guide to help you make an informed decision:

1. ***Understand the Task:*** Begin by thoroughly understanding the nature of the NLP task you are working on. Is it a text classification task, machine translation, sentiment analysis, text generation, or something else? The requirements and challenges of each task can vary.

2. ***Analyze the Data***: Examine your dataset. Consider its size, comp and diversity. Large datasets may support more complex models smaller datasets may require simpler architectures to avoid overfitting.

3. ***Review Existing Literature***: Look at published research and benchmark results for similar NLP tasks. This can provide insights into which architectures and model sizes have performed well in the past.

4. ***Consider Computational Resources***: Assess the computational resources available to you. Larger models with more parameters require more memory, computational power, and longer training times. Ensure that your resources can handle the chosen architecture.

5. ***Start with Baseline Models***: Begin with smaller, simpler models as a baseline. These models are faster to train and can help you quickly assess the task's difficulty and the feasibility of using more complex architectures.

6. ***Experiment and Iterate***: Conduct experiments with different architectures and model sizes. Train and evaluate models on your dataset to identify the point of diminishing returns regarding model size. Sometimes, simpler models perform nearly as well as larger ones.

7. ***Regularization Techniques***: If you find that a larger model is overfitting or requires more data than available, consider using regularization techniques like dropout, weight decay, or early stopping to prevent overfitting.

8. ***Model Interpretability***: Consider the interpretability of your model. Smaller models with simpler architectures are often more interpretable, which can be important for applications where model transparency is required.

9. ***Fine-Tuning Pre-trained Models***: For many NLP tasks, fine-tuning pre-trained models (e.g., BERT, GPT, or T5) can be highly effective. These models come in different sizes, and you can choose one based on your data and task. Smaller variants are faster and require less data but may offer slightly reduced performance.

10. ***Cross-Validation***: Use cross-validation to assess the generalization performance of different model sizes. This helps you avoid overfitting and provides a more robust estimate of model performance.

11. *Ensemble Models*: In some cases, combining multiple models with different architectures or sizes can lead to improved performance. Ensemble techniques can help mitigate the weaknesses of individual models.

12. *Budget Constraints*: Consider any budget constraints, including computational costs and time constraints. Smaller models are ty more cost-effective and faster to train.

13. **Early Experimentation:** When in doubt, it's often a good practice to start with a mid-sized model and then adjust the size based on experimental results. This approach balances performance and resource requirements.

1.8. What are the differences between supervised, unsupervised, and semi-supervised learning in NLP, and when would you use each approach?

Answer:

Supervised, unsupervised, and semi-supervised learning are three fundamental learning paradigms in the field of Natural Language Processing (NLP). They differ in terms of the type and amount of labeled data used during training and the goals they aim to achieve. Here are the key differences between these approaches and when to use each one:

Supervised Learning:

1. *Labeled Data*: Supervised learning requires a large amount of labeled data, where each example in the training dataset is associated with a known target or label. In NLP, this typically means having text data paired with predefined categories or labels.

2. *Objective*: The primary objective of supervised learning in NLP is to train a model to make predictions or classifications based on input text data. Common tasks include text classification (e.g., spam detection, sentiment analysis), named entity recognition, and machine translation.

3. *Use Cases*: Use supervised learning when you have a sufficient amount of labeled data for your specific NLP task. It is suitable for tasks where you want the model to learn explicit patterns and relationships between input and output data.

Unsupervised Learning:

1. *Labeled Data*: Unsupervised learning does not require labeled data during training. Instead, it focuses on finding hidden patterns, structures, or representations within the data without explicit guidance.
2. *Objective*: The main goal of unsupervised learning in NLP is to discover patterns or groupings within the text data. Common tasks inclu clustering similar documents, topic modeling, and word embed (e.g., Word2Vec, GloVe).
3. *Use Cases*: Unsupervised learning is useful when you want to explore and understand the underlying structure of your text data, such as identifying common themes or clusters. It can also be applied to dimensionality reduction or feature extraction.

Semi-Supervised Learning:

1. *Labeled Data:* Semi-supervised learning combines both labeled and unlabeled data during training. It uses a smaller amount of labeled data and a larger amount of unlabeled data, which is often easier to obtain in NLP.
2. *Objective*: Semi-supervised learning aims to leverage the additional information from unlabeled data to improve model performance on tasks that require labeled data. It bridges the gap between the data-rich supervised learning and data-scarce unsupervised learning.
3. *Use Cases*: Use semi-supervised learning when you have limited labeled data but access to a significant amount of unlabeled data. It is valuable for tasks where obtaining labeled data is costly or time-consuming. Common techniques include self-training, co-training, and multi-view learning.

1.9. In the context of NLP, what are some common techniques for text data preprocessing and cleaning?

Answer:

Text data preprocessing and cleaning are essential steps in Natural Language Processing (NLP) to prepare raw text data for analysis and modeling. Proper preprocessing can improve the quality of the data and the performance of NLP models. Here are some common techniques for text data preprocessing and cleaning:

1. *Lowercasing*: Convert all text to lowercase to ensure consistent representation of words. This helps in reducing the vocabulary size and

treating words with different cases as identical.

2. ***Tokenization***: Break the text into individual words or tokens. Tokenization is a fundamental step in NLP and is used to segment text into manageable units for analysis.
3. ***Stopword Removal***: Remove common stopwords (e.g., "and," "the that do not carry significant meaning in the context of the analy reduces noise in the data.
4. ***Punctuation and Special Character Removal:*** Remove punctuation marks, special characters, and symbols, as they may not be relevant for many NLP tasks. Be cautious when dealing with text where punctuation carries meaning, such as social media text.
5. ***Whitespace Removal***: Eliminate extra whitespaces and normalize spaces to a single space between words.
6. ***Lemmatization***: Reduce words to their base or root form (lemma). For example, "running" becomes "run." This helps in reducing word variation and grouping related words.
7. ***Stemming***: Similar to lemmatization, stemming reduces words to their root form, but it uses heuristics to chop off word endings. Stemming may be more aggressive than lemmatization.
8. ***Spell Checking and Correction***: Apply spell-checking and correction techniques to fix typos and spelling errors in the text.
9. ***Removing HTML Tags***: If dealing with web data, remove HTML tags and entities to extract the text content.
10. ***Handling Contractions and Abbreviations***: Expand contractions (e.g., "can't" to "cannot") and abbreviations (e.g., "Dr." to "Doctor") to ensure consistent representation.
11. ***Handling Numbers and Digits***: Decide whether to keep numbers as-is, replace them with placeholders (e.g., "123" to "<NUMBER>"), or remove them, depending on the task.
12. ***Handling URLs and Email Addresses***: Replace URLs and email addresses with placeholders or remove them if they are not relevant to the analysis.
13. ***Removing or Masking Personal Information***: In cases involving sensitive data, remove or mask personally identifiable information (PII) to ensure privacy compliance.
14. ***Encoding and Decoding***: Encode text data to a consistent character encoding format (e.g., UTF-8) and decode it if necessary.

15. *Handling Emoji and Emoticons*: Decide whether to keep, replace, or remove emojis and emoticons based on their relevance to the analysis.
16. *Handling Rare or Infrequent Words*: Consider replacing rare words with a special token to reduce the vocabulary size and the impact of rare words on the model.
17. *Normalizing Dates and Times*: Standardize date and time formats present in the text.
18. *Text Length Normalization*: Normalize text lengths, such as padding or truncating sentences to a fixed length for model input.
19. *Removing Duplicate Text*: Identify and remove duplicate or near-duplicate text entries, as they can bias the analysis.
20. *Domain-Specific Preprocessing*: In some cases, domain-specific preprocessing steps may be necessary, such as handling code in software-related text or addressing domain-specific jargon.

The choice of preprocessing steps depends on the specific NLP task and the characteristics of the data. It's often a good practice to iteratively preprocess and clean the data, inspect the results, and adjust the preprocessing steps accordingly to ensure that the data is suitable for the task at hand.

1.10. Describe some popular libraries and frameworks used for working with NLP tasks, such as spaCy, NLTK, or Hugging Face Transformers.

Answer:

There are several popular libraries and frameworks used for working with Natural Language Processing (NLP) tasks, each with its own strengths and capabilities. Here are descriptions of some of the most widely used NLP libraries and frameworks:

1. **spaCy:**

- *Description*: spaCy is an open-source NLP library designed for efficiency, accuracy, and ease of use. It provides pre-trained models for various languages and supports a wide range of NLP tasks, including tokenization, part-of-speech tagging, named entity recognition, dependency parsing, and more.
- *Key Features*: Fast and efficient, dependency parsing, named entity recognition, customizable pipeline, support for various languages, and

pre-trained word vectors.

- *Use Case*: spaCy is suitable for a wide range of NLP tasks, including text analysis, information extraction, and natural language understanding.

2. NLTK (Natural Language Toolkit):

- *Description*: NLTK is a comprehensive library for NLP written in Python. It offers various tools, resources, and libraries for linguistic data processing, text classification, tokenization, stemming, and more. It is widely used in education and research.
- *Key Features*: Tokenization, stemming, part-of-speech tagging, syntactic and semantic analysis, text classification, and extensive linguistic resources.
- *Use Case*: NLTK is often used for educational purposes, research, and prototyping of NLP solutions.

3. Hugging Face Transformers:

- *Description*: Hugging Face Transformers is an NLP library focused on transformer-based models, including BERT, GPT, RoBERTa, and more. It provides easy access to pre-trained models, fine-tuning capabilities, and a wide range of model architectures.
- *Key Features*: Pre-trained transformer models, easy model loading and fine-tuning, support for various NLP tasks (e.g., text classification, question answering), and a large community-contributed model repository.
- *Use Case*: Hugging Face Transformers is excellent for leveraging state-of-the-art transformer-based models for a wide range of NLP tasks, including sentiment analysis, text generation, and language understanding.

4. Gensim:

- *Description*: Gensim is an open-source library for topic modeling and document similarity analysis. It specializes in word embedding techniques like Word2Vec and Doc2Vec for generating word vectors and document embeddings.
- *Key Features*: Word embedding models (Word2Vec, Doc2Vec), topic modeling (LDA), similarity analysis, and support for large text corpora.

- *Use Case*: Gensim is primarily used for word embedding and document similarity tasks, making it suitable for topic modeling and information retrieval applications.

5. TextBlob:

- *Description*: TextBlob is a simplified and beginner-friendly NLP library built on top of NLTK and Pattern. It provides an easy-to-use API for common NLP tasks like part-of-speech tagging, sentiment analysis, and translation.
- *Key Features*: Simple API, part-of-speech tagging, sentiment analysis, translation, and text classification.
- *Use Case:* TextBlob is ideal for users who want to perform basic NLP tasks quickly and easily without delving into the complexities of lower-level libraries.

1.11. Explain the concept of sequence-to-sequence models in NLP and their applications, especially in tasks like language translation and text summarization.

Answer:

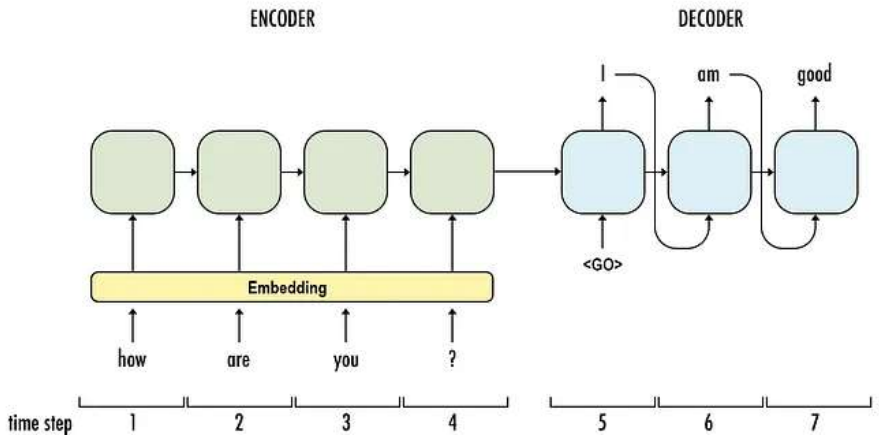

Sequence-to-sequence (Seq2Seq) models are a class of neural networks commonly used in Natural Language Processing (NLP) to process sequences of data and generate sequences of data as output. Seq2Seq models consist of two main components: an encoder and a decoder. These models have found applications in various NLP tasks, with prominent use cases in language translation and text summarization.

1. **Components of Sequence-to-Sequence Models:**

- *Encoder*: The encoder is responsible for processing and encoding the input sequence into a fixed-length representation or context vector. It reads the input sequence one element at a time, updating its internal state (often referred to as a hidden state) at each step. The final state of the encoder captures the context of the entire input sequence.
- *Decoder*: The decoder takes the context vector produced by the e and generates the output sequence one element at a time. It initializes its hidden state with the context vector and generates each element of the output sequence based on the previously generated elements and the context.
- *Variable-Length Input and Output*: Seq2Seq models are capable of handling variable-length input and output sequences, making them suitable for tasks where the length of the input and output may differ.

2. Applications of Seq2Seq Models:

1. **Language Translation:**

- *Task*: Seq2Seq models are commonly used for machine translation tasks, where they translate a sentence or sequence of text from one language to another.
- *How it works*: The input sentence is processed by the encoder, which produces a context vector. The decoder uses this context vector to generate the translated sentence.
- *Example*: Given the English sentence “Hello, how are you?” as input, a Seq2Seq model can generate the French translation, “Bonjour, comment ça va ?”

2. Text Summarization:

- *Task*: Seq2Seq models are used for text summarization tasks, where they generate a concise summary of a longer document or article.
- *How it works*: The input document is encoded by the encoder, and the decoder generates a summary by selecting and generating important sentences or phrases.
- *Example*: Given a news article as input, a Seq2Seq model can produce a concise summary of the article’s main points and key information.

3. Speech Recognition:

- *Task*: Seq2Seq models are applied in automatic speech recognition (ASR), where they convert spoken language into written text.
- *How it works*: The input audio signal is processed to extract acoustic features, which are then fed into the encoder. The decoder generates the corresponding text transcription.
- *Example*: A Seq2Seq model can transcribe spoken words or sente into written text, facilitating applications like voice assistants and transcription services.

4. Conversational Agents and Chatbots:

- *Task*: Seq2Seq models are used to build conversational agents and chatbots that can understand user input and generate human-like responses.
- *How it works*: The encoder processes the user's input message, and the decoder generates an appropriate response. The model can maintain context over multiple turns of conversation.
- *Example*: When a user asks a chatbot, "What's the weather like today?" the Seq2Seq model can generate a response like "The weather in your location is sunny with a high of 25°C."

5. Question Answering:

- *Task:* Seq2Seq models can be applied to question-answering tasks, where they take a question as input and generate a relevant answer.
- *How it works*: The encoder processes the question, and the decoder generates the answer based on the knowledge it has been trained on.
- *Example*: Given the question, "Who is the author of 'To Kill a Mockingbird'?" the Seq2Seq model can generate the answer, "Harper Lee."

Seq2Seq models have significantly advanced various NLP applications, enabling machines to handle tasks that require understanding and generation of human language. Their flexibility in processing variable-length sequences makes them adaptable to a wide range of applications beyond those mentioned here.

2. Transformer-Based Interview Questions

2.1. Explain the Transformer architecture and its significance in NLP.

Answer:

The Transformer architecture is a deep learning model architecture that was introduced in the paper "Attention Is All You Need" by Vaswani et al. in 2017. It has had a profound impact on the field of Natural Language Processing (NLP) and has become the foundation for many state-of-the-art models in NLP. The key components of a transformer architecture are as follows:

1. *Encoder*: The encoder processes the input sequence, such as a sentence or a document, and transforms it into a set of representations that capture the contextual information of each input element. The encoder consists of multiple identical layers, each containing a self-attention mechanism and position-wise feed-forward neural networks. The self-attention mechanism allows the model to attend to different parts of the input sequence while encoding it.
2. *Decoder:* The decoder takes the encoded representations generated by the encoder and generates an output sequence. It also consists of multiple identical layers, each containing a self-attention mechanism and additional cross-attention mechanisms. The cross-attention mechanisms enable the decoder to attend to relevant parts of the encoded input sequence when generating the output.
3. *Self-Attention*: Self-attention is a mechanism that allows the transformer to weigh the importance of different elements in the input sequence when generating representations. It computes attention scores between each element and every other element in the sequence, resulting in a weighted sum of the values. This process allows the model to capture dependencies and relationships between different elements in the sequence.
4. *Positional Encoding*: Transformers incorporate positional encoding to provide information about the order or position of elements in the input sequence. This encoding is added to the input embeddings and allows the model to understand the sequential nature of the data.
5. *Feed-Forward Networks*: Transformers utilize feed-forward neural networks to process the representations generated by the attention mechanisms. These networks consist of multiple layers of fully

connected neural networks with activation functions, enabling non-linear transformations of the input representations.

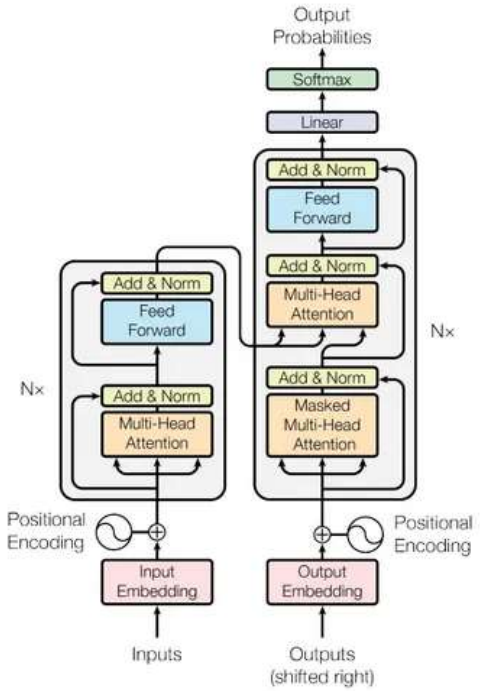

The transformer architecture is widely used in NLP tasks due to several reasons:

- ***Self-Attention Mechanism***: Transformers leverage a self-attention mechanism that allows the model to focus on different parts of the input sequence during processing. This mechanism enables the model to capture long-range dependencies and contextual information efficiently, making it particularly effective for tasks that involve understanding and generating natural language.
- ***Parallelization***: Transformers can process the elements of a sequence in parallel, as opposed to recurrent neural networks (RNNs) that require sequential processing. This parallelization greatly accelerates training and inference, making transformers more computationally efficient.
- ***Scalability***: Transformers scale well with the length of input sequences, thanks to the self-attention mechanism. Unlike RNNs, transformers do not suffer from the vanishing or exploding gradient problem, which can hinder the modeling of long sequences. This scalability makes transformers suitable for tasks that involve long texts or documents.
- ***Transfer Learning***: Transformers have shown great success in pre-training and transfer learning. Models like BERT (Bidirectional Encoder Representations from Transformers) and GPT (Generative Pre-trained

Transformer) are pre-trained on massive amounts of text data, enabling them to learn rich representations of language. These pre-trained models can then be fine-tuned on specific downstream tasks with comparatively smaller datasets, leading to better generalization and improved performance.

- *Contextual Understanding*: Transformers excel in capturing the contextual meaning of words and sentences. By considering the entire input sequence simultaneously, transformers can generate more accurate representations that incorporate global context, allowing for better language understanding and generation.

2.2. What is the purpose of attention mechanisms in Transformer models, and how do they work?

Answer:

Attention mechanisms in Transformer models serve the fundamental purpose of enabling the model to focus on different parts of the input sequence when making predictions. These mechanisms allow Transformers to capture dependencies between words or elements in a sequence regardless of their positions. Attention mechanisms are crucial for the success of Transformers in various Natural Language Processing (NLP) tasks, as they provide a way to weigh the importance of different input elements during computation. Here's how attention mechanisms work and their purpose:

Purpose of Attention Mechanisms: The primary purposes of attention mechanisms in Transformer models are as follows:

1. *Capture Long-Range Dependencies*: Attention mechanisms enable the model to capture relationships between words or elements in a sequence that are distant from each other. This is especially important in NLP, where understanding the context and dependencies between words is crucial for tasks like language translation, text summarization, and text generation.
2. *Handle Variable-Length Sequences*: Attention mechanisms allow Transformers to process variable-length input sequences effectively. They adaptively focus on relevant parts of the input sequence without relying on fixed-size windows or receptive fields, as seen in convolutional neural networks (CNNs).

3. ***Enhance Contextual Understanding***: Attention mechanisms provide a context vector that summarizes the important information from the input sequence, which is then used in subsequent layers of the model. This enhanced contextual understanding is valuable for various NLP tasks, such as sentiment analysis, machine translation, and ques answering.

How Attention Mechanisms Work: Attention mechanisms work through a series of mathematical operations, often involving queries, keys, and values. Here's a simplified overview of how they operate:

1. ***Query, Key, and Value***: In attention mechanisms, each input element (e.g., word) is associated with three vectors: a query vector, a key vector, and a value vector. These vectors are learned during training.
2. ***Scoring***: To compute the attention weight for a given query with respect to a key, a scoring function is used, such as the dot product, a scaled dot product, or a learned compatibility function. This scoring function quantifies how well the query and key match or relate to each other.
3. ***Attention Weights***: The scores are transformed into attention weights through a softmax function, which normalizes them to sum to 1. These attention weights represent the importance or relevance of each key with respect to the query.
4. ***Context Vector***: The attention weights are used to compute a weighted sum of the value vectors. This weighted sum is the context vector, which captures the relevant information from the input sequence for a particular query.
5. ***Multi-Head Attention***: In Transformer models, multiple attention heads are typically used in parallel. Each attention head learns different relationships and focuses on different parts of the input sequence. The outputs from multiple attention heads are concatenated and linearly transformed to produce the final context vector.
6. ***Positional Encoding***: In the Transformer architecture, positional encodings are added to the input embeddings to provide information about the position of each element in the sequence. This allows the model to distinguish between elements with the same content but different positions.
7. ***Layer Stacking***: Transformers often stack multiple layers of attention mechanisms and feedforward neural networks to capture complex relationships and hierarchies in the data.

2.3. Can you provide an overview of the attention mechanism's evolution, from the original Transformer to more recent variations like BERT and GPT models?

Answer:

The attention mechanism has undergone significant evolution from original introduction in the Transformer model to more recent vari like BERT (Bidirectional Encoder Representations from Transformers) and GPT (Generative Pre-trained Transformer) models. Each evolution has contributed to improving the capabilities and performance of Transformer-based models in Natural Language Processing (NLP) tasks. Here's an overview of the evolution of attention mechanisms in these models:

1. **Original Transformer (Vaswani et al., 2017):**

- *Attention Type*: The original Transformer introduced the self-attention mechanism, sometimes referred to as scaled dot-product attention.
- *Key Contributions:*
  1. The concept of self-attention allowed the model to capture dependencies between words or elements in a sequence without relying on fixed-size windows or local context.
  2. The Transformer architecture provided a scalable and parallelizable framework, making it suitable for processing long sequences efficiently.
  3. Positional encodings were introduced to provide information about the position of words in the sequence.

2. BERT (Devlin et al., 2018):

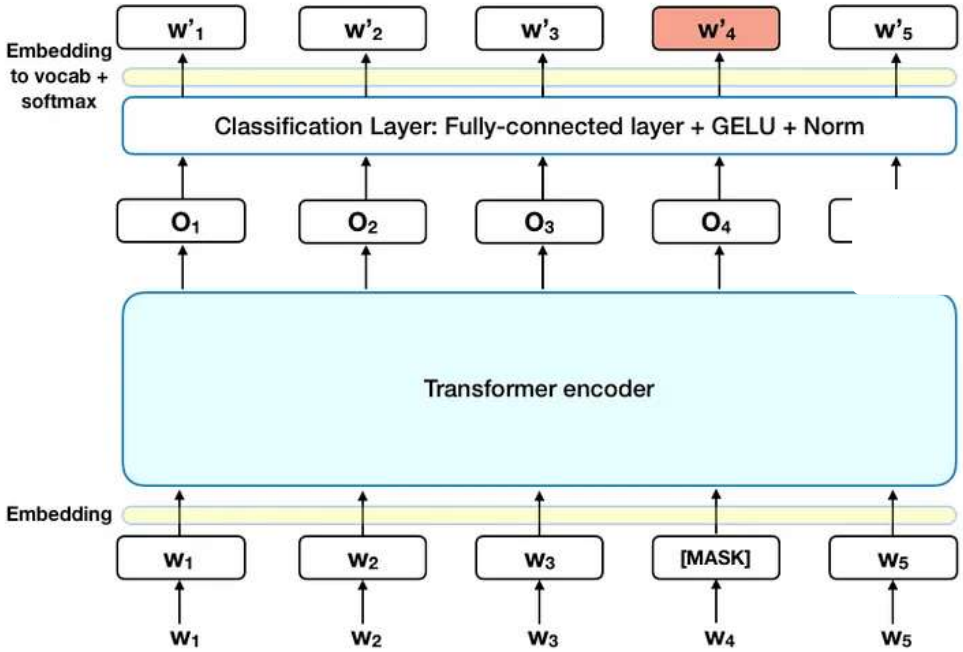

- *Attention Type:* BERT introduced the concept of bidirectional attention. It uses masked multi-head self-attention to attend to both the left and right context in a sequence.
- *Key Contributions:*
  1. Bidirectional attention allowed BERT to capture contextual information from the entire input sequence, leading to significant improvements in a wide range of NLP tasks.
  2. Pre-training on large text corpora followed by fine-tuning on specific tasks became a dominant paradigm, enabling BERT to achieve state-of-the-art results across various benchmarks.
  3. BERT-based models like RoBERTa and DistilBERT further refined the training strategies and architectures.

3. GPT (Radford et al., 2018, 2019, 2020):

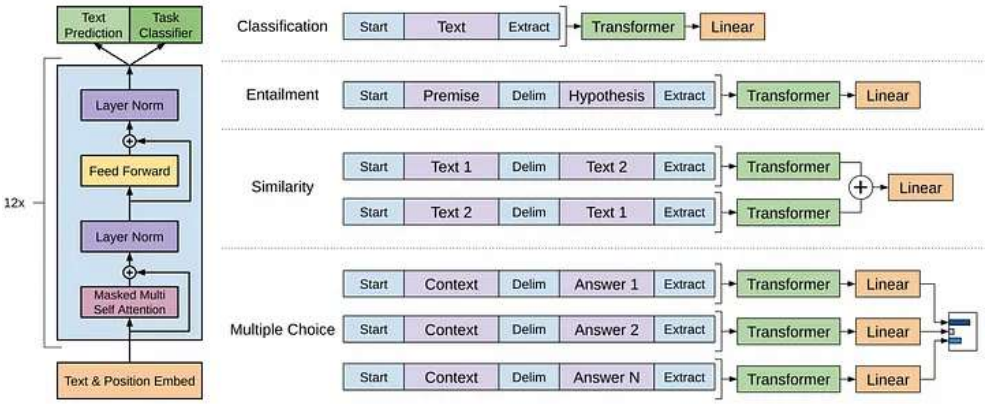

- *Attention Type*: The GPT series (GPT-1, GPT-2, GPT-3) primarily used unidirectional (left-to-right) causal self-attention in autoregressive language modeling.
- **Key Contributions:**
  1. The GPT models demonstrated the effectiveness of autoregres language modeling, where each token is generated conditioned previously generated tokens.
  2. GPT-2 and GPT-3 scaled up the model size and demonstrated impressive capabilities in natural language understanding and generation, even without task-specific fine-tuning.
  3. GPT-3, in particular, is one of the largest language models to date, with 175 billion parameters.

4. Transformers for Specific NLP Tasks:

- The evolution of attention mechanisms in Transformer-based models has led to a proliferation of task-specific models. These models adapt and specialize the original Transformer architecture for various NLP tasks such as text classification, question-answering summarization, and translation.
- Examples include the T5 (Text-to-Text Transfer Transformer) and BART (Bidirectional and Auto-Regressive Transformers) models.

5. Hybrid Models and Beyond:

- Recent advancements have seen the development of hybrid models that combine elements of BERT-style pre-training with autoregressive decoding similar to GPT models. These hybrid models aim to capture the benefits of both approaches.
- The field continues to explore novel architectures, training techniques, and model sizes to push the boundaries of NLP performance.

The evolution of attention mechanisms in Transformer models has significantly improved the capabilities of NLP models, enabling them to handle a wide range of tasks with state-of-the-art performance. Researchers and practitioners continue to build upon these advances, leading to ongoing innovations in the field of natural language understanding and generation.

3. Large Language Models Questions

3.1. Can you explain how a large language model like GPT-3 works, and what are some of its key applications and limitations?

Answer:

GPT-3 (Generative Pre-trained Transformer 3) is a state-of-the-art la language model developed by OpenAI. It is part of the Transformer models and is known for its impressive capabilities in natural language understanding and generation. Here's an overview of how GPT-3 works, along with its key applications and limitations:

How GPT-3 Works:

1. *Pre-training*: GPT-3 is pre-trained on a massive corpus of text data from the internet. During pre-training, the model learns to predict the next word in a sentence, effectively learning grammar, syntax, world knowledge, and some level of common sense reasoning.
2. *Architecture*: GPT-3 uses a deep neural network with a Transformer architecture, which includes multiple layers of self-attention mechanisms and feedforward neural networks. These components allow it to capture dependencies and relationships in text data.
3. *Contextual Understanding*: GPT-3 excels in understanding the context of a given input. It can take in a sequence of text and generate coherent and contextually relevant text as output.
4. *Autoregressive Generation*: GPT-3 generates text in an autoregressive manner, meaning that it predicts one word at a time while conditioning the previously generated words. This allows it to produce coherent and contextually consistent text.

Key Applications:

1. *Text Generation*: GPT-3 can be used for text generation tasks, including creative writing, content generation, and text completion. It has been used to generate articles, poems, stories, and more.
2. *Language Translation*: GPT-3 can be fine-tuned for language translation tasks. It can translate text from one language to another, similar to traditional machine translation models.
3. *Question Answering*: GPT-3 can answer questions posed in natural language based on the context provided. It has been used in chatbots and virtual assistants to answer user queries.

4. *Text Summarization*: GPT-3 can generate concise summaries of longer pieces of text, making it useful for summarizing news articles, research papers, and other documents.
5. *Sentiment Analysis*: GPT-3 can analyze the sentiment of a given text, determining whether it is positive, negative, or neutral. This is u social media monitoring and customer feedback analysis.

Limitations:

1. *Large Model Size:* GPT-3 is a massive model with 175 billion parameters, making it computationally expensive and resource-intensive to train and deploy.
2. *Lack of Common Sense*: While GPT-3 demonstrates impressive language understanding, it lacks true common sense reasoning and may generate plausible-sounding but incorrect or nonsensical answers.
3. *Bias*: GPT-3, like many language models, can exhibit bias present in its training data, potentially leading to biased or unfair outputs.
4. *Lack of Explanation*: The model operates as a black box, and it is challenging to explain its decision-making process or to provide detailed rationales for its answers.
5. *Need for Fine-Tuning*: To adapt GPT-3 to specific tasks and to mitigate some of its limitations, fine-tuning on task-specific data is often required, which can be resource-intensive.
6. *Data-Driven*: GPT-3's responses are data-driven, meaning that they are based on patterns in the training data and may not always reflect true understanding.

3.2. What is the difference between pre-training and fine-tuning in the context of large language models like BERT or GPT-3?

Answer:

In the context of large language models like BERT and GPT-3, pre-training and fine-tuning are two distinct phases of model development that involve training the model on different types of data and tasks. Here's an explanation of the differences between pre-training and fine-tuning:

1. **Pre-training:**

- ***What is it***: Pre-training is the initial phase of training a large language model. During this phase, the model is trained on a massive corpus of unlabeled text data from the internet. The goal is to get the model to learn general language understanding and representation.
- ***Objective***: The main objective of pre-training is to make the mod knowledgeable about language, including grammar, syntax, sem and some level of common sense reasoning. The model learns to predict the next word in a sentence based on the context provided by the surrounding words.
- ***Unsupervised Learning***: Pre-training is an unsupervised learning task, meaning that the model doesn't have access to specific labeled tasks or target outputs during this phase. It learns from the raw text data without human-provided annotations.
- ***Output***: The output of the pre-training phase is a "pre-trained" model with learned parameters (weights and biases) that capture general language knowledge. This model is capable of understanding and generating text but is not specialized for any specific task.

2. Fine-tuning:

- ***What is it:*** Fine-tuning is the subsequent phase after pre-training. During this phase, the pre-trained model is further trained on task-specific labeled data. Fine-tuning adapts the general language model to perform well on specific downstream tasks.
- ***Objective***: The objective of fine-tuning is to specialize the model for specific NLP tasks, such as text classification, named entity recognition, sentiment analysis, question answering, or language translation. Fine-tuning involves providing the model with labeled task data and fine-tuning its parameters to make task-specific predictions.
- ***Supervised Learning***: Fine-tuning is a supervised learning task, meaning that it uses labeled data with known task-specific targets (e.g., class labels for classification tasks). The model learns to make predictions based on the provided input data and target labels.
- ***Output***: The output of the fine-tuning phase is a task-specific model that has inherited the language understanding capabilities from the pre-trained model. This task-specific model is fine-tuned to perform well on the particular task it was trained for.

3.3. What are the limitations of large language models like GPT-3, and how can those limitations be addressed?

Answer:

Large language models like GPT-3 offer remarkable capabilities in natural language understanding and generation, but they also come with se limitations. Here are some of the key limitations of large language r like GPT-3 and potential ways to address them:

1. Lack of Common Sense Reasoning:

- *Limitation*: GPT-3, despite its language understanding, often lacks true common sense reasoning. It can generate plausible-sounding but incorrect or nonsensical responses.
- *Addressing*: To address this limitation, combining large language models with external knowledge bases and fact-checking mechanisms can help verify the correctness of generated content.

2. Bias and Fairness:

- *Limitation*: Large language models can learn biases present in their training data, leading to outputs that may reflect these biases and exhibit unfair behavior.
- *Addressing*: Mitigating bias involves carefully curating and diversifying training data, adopting fairness-aware training techniques, and conducting regular audits of model behavior to identify and rectify biases.

3. Ethical Concerns:

- *Limitation*: Large language models can be used unethically to generate harmful or misleading content, such as deepfake text, misinformation, or hate speech.
- *Addressing*: Implementing ethical guidelines, content moderation, and user reporting mechanisms can help mitigate the spread of unethical or harmful content generated by these models.

4. Resource Intensity:

- *Limitation*: Training and deploying large language models like GPT-3 require significant computational resources and energy consumption.

- *Addressing*: Research into more efficient model architectures, model distillation techniques, and reducing the environmental impact of training can help address resource intensity concerns.

5. Lack of Explainability:

- *Limitation*: Large language models operate as black boxes, making it challenging to explain their decision-making processes or provide detailed rationales for their outputs.
- *Addressing*: Developing explainability techniques, interpretability tools, and transparency initiatives can make it easier to understand and trust model behavior.

6. Fine-Tuning Challenges:

- *Limitation*: Fine-tuning GPT-3 for specific tasks can be resource-intensive and may require substantial task-specific data.
- *Addressing*: Leveraging transfer learning from publicly available pre-trained models and sharing fine-tuning datasets can democratize access to advanced language capabilities and reduce the cost of adaptation.

7. Data Privacy:

- *Limitation*: GPT-3 can generate text based on user input, which may include sensitive personal information.
- *Addressing*: Implementing strong data privacy practices, user consent mechanisms, and secure data handling can protect user privacy and data.

8. Evaluation Challenges:

- *Limitation*: Measuring the performance and quality of GPT-3 and similar models can be challenging, as traditional evaluation metrics may not fully capture model limitations.
- *Addressing*: Developing better evaluation benchmarks and metrics specific to language understanding and generation tasks can help assess model performance more accurately.

9. Contextual Understanding:

- *Limitation*: While GPT-3 exhibits strong contextual understanding, it may still struggle with nuanced and context-dependent tasks.
- *Addressing*: Task-specific fine-tuning and enhancing the diversity and relevance of training data can improve contextual understanding.

10. Safety and Security:

- *Limitation*: Large language models can be vulnerable to adversarial attacks, where input text is carefully crafted to manipulate model behavior.
- *Addressing:* Developing robustness against adversarial attacks, such as using adversarial training, can enhance model safety and security.

Addressing these limitations requires a concerted effort from the research community, organizations, and policymakers to ensure the responsible and ethical use of large language models while actively working to improve their capabilities and mitigate their shortcomings.

3.4. How would you approach building a chatbot using large language models, and what considerations should be kept in mind for a successful chatbot implementation?

Answer:

Building a chatbot using large language models like GPT-3 or BERT requires a thoughtful approach and consideration of various factors to ensure a successful implementation. Here's a step-by-step guide on how to approach building a chatbot and key considerations to keep in mind:

1. *Define the Purpose and Scope:* Clearly define the purpose and goals of your chatbot. What tasks or questions should it handle? Determine the scope of its capabilities and limitations.

2. *Data Collection and Preparation*: Gather relevant data and content that the chatbot will use to respond to user queries. This may include FAQs, knowledge bases, and training data for fine-tuning. Next clean and preprocess the data to ensure it's in a format suitable for training and integration with the chatbot.

3. *Choose a Language Model*: Decide on the language model that best suits your needs. You can choose from pre-trained models like GPT-3, BERT, or others, depending on the complexity of your chatbot's tasks.

4. ***Pre-training and Fine-tuning***: If using a pre-trained model, fine-tune it on your specific chatbot task and data. This helps the model adapt to your domain and provide contextually relevant responses. Design a supervised fine-tuning dataset that includes user queries and corresponding model responses. Ensure a diverse range of user inputs to cover potential c interactions.

5. ***Integration***: Integrate the chatbot into your chosen platform or application, whether it's a website, messaging app, or other user interface. Ensure a smooth user experience.

6. ***Natural Language Understanding (NLU):*** Implement NLU components to extract user intents, entities, and context from user queries. This helps the chatbot understand user input effectively.

7. ***Dialog Management***: Design a dialog management system to keep track of the conversation context and manage multi-turn interactions. Maintain a history of the conversation to provide coherent responses.

8. ***Personalization and User Context***: Implement personalization mechanisms to tailor responses to individual users or user groups. Use user data and preferences to enhance the user experience.

9. ***Error Handling***: Create a robust error-handling system to gracefully handle user queries that the chatbot cannot answer or misunderstand. Provide informative error messages or suggestions.

10. ***User Feedback and Monitoring***: Implement mechanisms for users to provide feedback on chatbot interactions. Monitor user feedback and chatbot performance regularly to identify areas for improvement.

11. ***Privacy and Security***: Implement strong data privacy measures, especially if the chatbot handles sensitive information. Ensure user data is handled securely and in compliance with data protection regulations.

12. ***Ethical Considerations***: Be aware of ethical considerations, including the potential for bias and the responsible use of AI. Regularly review and audit chatbot interactions to mitigate ethical risks.

13. ***Testing and Evaluation***: Conduct extensive testing and evaluation of the chatbot's performance. Test for various scenarios, user inputs, and edge cases to identify and fix issues.

14. *Continuous Improvement*: Chatbots are not a one-time project; they require ongoing maintenance and improvement. Continuously gather user feedback, monitor performance, and update the chatbot as needed.

15. *User Training and Documentation*: Provide clear instructions to u how to interact with the chatbot effectively. Offer user training mat documentation to enhance user adoption.

16. *Scalability*: Ensure that the chatbot infrastructure can scale to handle increased user loads as your user base grows.

3.5. Discuss the challenges and ethical considerations of using large language models, especially in generating text and content that could be harmful or misleading.

Answer:

The use of large language models, such as GPT-3, BERT, and similar models, has brought about transformative capabilities in Natural Language Processing (NLP). However, along with their benefits, there are significant challenges and ethical considerations associated with these models, particularly when they are used to generate text and content. Here are some of the key challenges and ethical considerations:

1. Bias and Fairness:

- *Challenge*: Large language models can learn biases present in the training data, which may perpetuate stereotypes or exhibit unfair behavior, particularly towards marginalized groups.
- *Ethical Consideration*: It is essential to mitigate and address bias in model training data and algorithms. Fairness audits, diverse training data, and responsible AI practices are necessary to reduce bias.

2. Misinformation and Fake News:

- *Challenge*: These models can generate plausible-sounding but false information, which can contribute to the spread of misinformation and fake news.
- *Ethical Consideration*: There's a responsibility to ensure that AI-generated content is accurate and not misleading. Fact-checking, content moderation, and algorithms designed to flag potentially false information are necessary.

3. Malicious Use:

- *Challenge*: Malicious actors can misuse large language models to generate harmful, abusive, or malicious content, including hate speech, phishing emails, or deepfake text.
- *Ethical Consideration*: It's important to monitor and prevent mal use while balancing the need for privacy and free expression. Clear guidelines, community standards, and proactive detection mechanisms are vital.

4. Loss of Jobs and Content Quality:

- *Challenge*: Large language models can automate content creation, potentially leading to job displacement in content production industries. There's also concern about the quality of automatically generated content.
- *Ethical Consideration*: Ethical AI usage should prioritize human well-being. Mitigation strategies include reskilling, upholding content quality standards, and using AI to augment human creativity rather than replace it.

5. Data Privacy and Informed Consent:

- *Challenge*: Language models can generate text based on user input, which may include sensitive personal information. Protecting user privacy and obtaining informed consent are challenges.
- *Ethical Consideration*: Respecting user privacy and obtaining consent for data usage is essential. Clear privacy policies, user controls, and data anonymization practices are ethical solutions.

6. Amplification of Harmful Views:

- *Challenge*: AI-generated content can amplify extremist views and hate speech, leading to polarization and division.
- *Ethical Consideration*: Platforms and organizations need to implement measures to curb the spread of extremist or harmful content generated by AI while respecting freedom of expression.

7. Intellectual Property and Plagiarism:

- *Challenge*: AI-generated text can sometimes unintentionally plagiarize or infringe upon intellectual property rights.
- *Ethical Consideration*: Safeguards against plagiarism, adherence to copyright laws, and proper attribution should be maintained in AI-generated content.

8. Accountability and Transparency:

- **Challenge**: Determining accountability when AI-generated content causes harm or ethical issues can be challenging, especially when the decision-making process of these models is not transparent.
- *Ethical Consideration*: Transparency in AI systems and clear lines of accountability are crucial. Organizations should document model behavior and make efforts to explain the reasoning behind AI-generated content.

Addressing these challenges and ethical considerations requires a collaborative effort involving researchers, developers, policymakers, and society at large. Striking a balance between the immense potential of large language models and the responsible and ethical use of AI is essential for the continued progress and positive impact of AI in the field of NLP and beyond.

Level Up Coding

Thanks for being a part of our community! Before you go:

- 👏 Clap for the story and follow the author 👉
- 📰 View more content in the Level Up Coding publication

🔔 Follow us: Twitter | LinkedIn | Newsletter

🧠 **AI Tools ⇒ Become an AI prompt engineer**

Data Science AI Large Format Printing Interview NLP

470 3