gametiny

Modified by Billy Cheung 2018 Nov 18 to add a header for USBasp programmer that doubles up as a socket for the OLED.
A switch (DP3) is added to allow INT to be used for PB3 (fully pulled down when down button is pressed), allowing it support attiny arcade game.
by simply swapping the button pins in the program while keeping most part of the interrupt codes unchanged.
*** WARNING ***
Inserting the battery or the OLED or the header in the wrong direction may cause permanent damage to the ATTiny85 chip and/or the OLED, and/or the USB port of your computer
Beware of different pin layout of OLED from different manfacturers that may swap the positions of GND and VCC, and SCL and SDA.
ATtiny85 boards with USB ports are NOT suitable for this project. The bootloader on such boards uses up almost half of the program memory space with insufficient space for game program.
Unless you know how to solder surface mount components (SMD), buy the raw/bare dual in line ATtin85 for this project. and use an IC socket.
Programming the ATtiny85 is a bit tricky. Not every Arduino UNO, NANO board will work. Clone Nano/Uno from China may not work.
USBasp programmer is preferred. You need to create the cable to connect the Tiny Boy header to the USBasp header as shown in the schematics at the bottom right
*** TIPS ***
Game buttons are all 6x6 silent buttons. The up/down/left/right buttons can be replaced by a 5-direction mini joystick-like integrated button.
Use small PC speakers or piezo-electric buzzors without an internal beeper circuit as sound output,
Test out the circuit on a breadboard first before soldering on a circuit board.
Use laminated (isolated) wire for connection between points. Use the small soldering tip and apply flux.
Based on original version of Attiny Joypad created by Daniel C. (Electro L.I.B) 2018 GPL V3

insert the OLED to the middle 4 pins of the gametiny header
There are two types of OLED pint out depending on manufacturer.
VCC and GND are swapped.
This schematic only support the type of OLED shown below
(GND on pin1, VCC on pin2)
If you are using other types ofOLED (VCC on pin 1) then
swap the VCC and the GND pin on the headers on the gametiny board
as well as that on the cable for the USBasp programmer.
Incorrect VCC/GND will cause permanent damage to the kit.

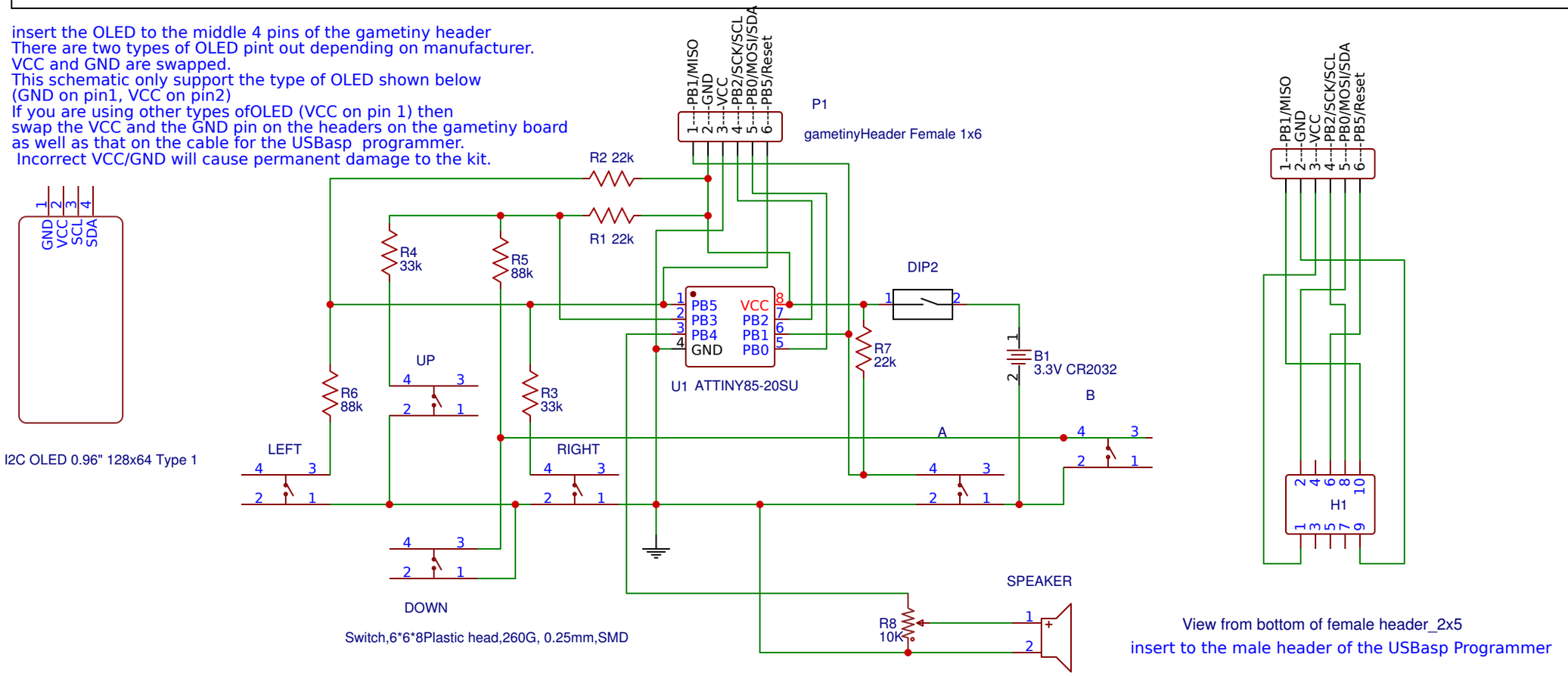

TITLE: gametiny	REV: 1.2
Date: 2019-01-21	Sheet: 1/1
EasyEDA V5.8.20	Drawn By: Billy Cheung