College of Engineering, Design and Physical Science
Electronic and Computer Engineering

Assignment
Java Testing and Measuring

Distributed Computing Systems Engineering Msc

Author: Christoph Gschrey

Lab-Partner: Matthias Gebert

Date: 22. September 2017

Supervisor: Prof. Dr. Peter Väterlein

College of Engineering, Design and Physical Sciences

Department of Engineering and Design

ASSIGNMENT SUBMISSION FORM

Please note: that no course work will be accepted without this cover sheet.

Please ensure: that you keep a copy of work submitted and retain your receipt in case of query.

Student Number:	**SPO ID Number** (Office use only):
Course:	**Level:**

MODULE	
Module Code:	**Module Title:**
Lab / Assignment:	**Deadline:**
Lab group (if applicable):	**Date Stamp** (Office use only):
Academic Responsible:	
Administrator:	

Please note: that detailed feedback will be provided on a feedback form.

✂.....

RECEIPT SECTION (Office Copy)	
Student Number:	**SPO ID Number** (Office use only):
Student First Name:	**Student Last Name:**
Module Code:	**Module Title:**
Lab / Assignment:	
Lab group (if applicable):	**Deadline:**
Academic Responsible:	**Number of Days late:**

DECLARATION	
I have read and I understand the guidelines on plagiarism and cheating in the Handbook and I certify that my contribution to this report fully complies with these guidelines. I confirm that I have kept a copy of my work and that I have not lent my work to any other students.	
Signed:	**Date Stamp** (Office use only):

✂.....

RECEIPT SECTION (Student Copy)	
Student Number:	**Student Name**:
Lab / Assignment:	
Lab group (if applicable):	**Module Title:**
Academic Responsible:	**Deadline:**
Module Code:	**Date Stamp** (Office use only):

The University penalty system will be applied to any work submitted late.

IMPORTANT: You **MUST** keep this receipt in a safe place as you may be asked to produce it at any time as proof of submission of the assignment. Please submit this form with the assignment attached to theDepartment of Design Education Office in the Michael Sterling Building, room MCST 055.

Contents

1 Introduction **1**

2 IP/ICMP analysis **2**

2.1 Node configuration . . . 3

2.2 Subnet internal IP Destination . . . 4

2.2.1 a) Basic PING command . . . 5

2.2.2 b) PING command with large data package . . . 8

2.2.3 c) PING command with 'don't fragment' flag . . . 11

2.3 Subnet external IP Destination . . . 11

2.3.1 d) Basic PING command with destination in another subnet . . . 12

2.3.2 e) PING command with reduced 'time to live' . . . 16

2.3.3 f) PING command with timestamps . . . 19

2.4 ARP analysis . . . 22

2.4.1 a) Deleting the ARP cache . . . 24

2.4.2 b) Shutting down one PC . . . 27

2.4.3 c) Reconnect after Reboot . . . 28

2.5 IP multicast addressing . . . 28

3 TCP analysis **31**

3.1 Traffic generator handling . . . 32

3.2 Simple TCP Communication . . . 32

3.2.1 Connection establishment . . . 32

3.2.2 Data transfer . . . 34

3.2.3 Connection release . . . 36

3.3 TCP flow control . . . 37

3.4 TCP transmission error recovery/abort . . . 38

3.4.1 transmission error recovery . . . 39

3.4.2 transmission error abort . . . 42

3.5 TCP protocol errors (synchronization errors) . . . 43

4 IPv6/ICMPv6 analysis **45**

4.1 Node configuration . . . 46

4.1.1 IPv4 and IPv6 configuration . . . 46

4.1.2 interfaces for IPv6 . . . 46

4.2 PING commands 46
4.2.1 a) Basic ICMPv6 PING command 46
4.2.2 b) ICMPv6 PING command with large data package 46
4.2.3 c) Rebooting PC 46
4.2.4 d) Enforcing Neighbor discovery 46
4.2.5 e) ICMPv6 PING command with destination in another subnet 46
4.2.6 f) PING to a remote tunnel end 46

5 Conclusion **47**

Bibliography **48**

1 Introduction

The following report refers to the Computer network assignment and is structured into three parts. The first part's topic is an analysis of the network protocols ICMP and IP (both v4), while the second part covers the exercises related to TCP. The final chapter describes the exercises for the new versions of ICMP and IP (v6). These exercises were done together with my lab-partner Antonio Parotta.

2 IP/ICMP analysis

In this first part of the laboratory the program Wireshark was used to capture and analyse packages of different network protocols. The traffic was generated by PING-commands to send the observable packages from one lab PC to another. The following network protocols were analyzed:

- Internet Protocol version 4 (IPv4)
- Internet Control Message Protocol version 4 (ICMPv4)
- Address Resolution Protocol (ARP)
- Carrier Sense Multiple Access/Collision Detection (CSMA/CD)

To understand how these protocols work and to be able to explain how they behave in different situations, having a look on the protocol's headers is necessary.

The PING-commands generate packages consisting of different protocol headers and transferable data. Each Ping is transformed into an Ethernet frame containing the IP and ICMP headers. Table **??** is an representation of the basic ICMP Header while Table **??** shows the header for the echo request/reply packages that can be observed via Wireshark when executing the PING-commands.

bits	0-7	8-15	16-23	24-31
bytes	1	2	3	4
offset 0	Type	Code	Checksum	
offset 32	Data			

Table 2.1: ICMP header

bits	0-7	8-15	16-23	24-31
bytes	1	2	3	4
offset 0	Type	Code	Checksum	
offset 32	Identifier		Sequence Number	
offset 64	data			

Table 2.2: ICMP type 8 echo request/reply packet

Table **??** shows the header for the Internet Protocol v4. Noteable here are the entered destination address as well as the source address of the sender. The Time to Live is also an important

segment of the header, which will be significant later on for an specific PING-Command. IP provides the possibility to specify options for the transfered packet. This will also be used in one of the PING-Commands.

<table>
<tr><td>bits</td><td>0-3</td><td>4-7</td><td>8-11</td><td>12-15</td><td>16-18</td><td>19-23</td><td>24-27</td><td>28-31</td></tr>
<tr><td>bytes</td><td colspan="2">1</td><td colspan="2">2</td><td colspan="2">3</td><td colspan="2">4</td></tr>
<tr><td>offset 0</td><td>Version</td><td>IHL</td><td colspan="2">Type of Service</td><td colspan="4">Total Length</td></tr>
<tr><td>offset 32</td><td colspan="4">Identification</td><td>Flags</td><td colspan="3">Fragment Offset</td></tr>
<tr><td>offset 64</td><td colspan="2">Time to Live</td><td colspan="2">Protocol</td><td colspan="4">Header Checksum</td></tr>
<tr><td>offset 96</td><td colspan="8">Source Address</td></tr>
<tr><td>offset 128</td><td colspan="8">Destination Address</td></tr>
<tr><td>offset 160</td><td colspan="8">Options</td></tr>
</table>

Table 2.3: IPv4 Header

Table **??** shows the abstract Ethernet II frame. This frame contains the MAC-addresses for source and destination, a type segment as well as the checksum for the frame. Interesting here is the Payload field. This segments contains the headers for ICMP and IP as well as the transferable data. The maximal size for this segment is 1500 bytes for one packet. But because is must contain the headers for each networking protocol (ICMP and IP), it can't be fully occupied by transferable data. This is why the Maximum Transmission Unit (MTU) is smaller. It is only 1472 bytes, because the size of the headers must be subtracted from the payload field.
MTU = Payload − IP Header − ICMP Header
1500 byte − 20 byte − 8 byte = 1472 byte

Size in bit	24	24	8	184-6000	16
Size in byte	6	6	2	46 - 1500	4
Frame segments	Destination Address	Source Address	Type	Payload (Data)	FCS

Table 2.4: Ethernet II frame

2.1 Node configuration

Figure 2.1 shows the node configuration and settings for the computer used for the exercises in this workshop:

```
Ethernet-Adapter IPV4-priv:

   Verbindungsspezifisches DNS-Suffix:
   IPv4-Adresse  . . . . . . . . . . : 192.168.31.6
   Subnetzmaske  . . . . . . . . . . : 255.255.255.0
   Standardgateway . . . . . . . . . :

Ethernet-Adapter IPV4-pub:

   Verbindungsspezifisches DNS-Suffix: rznt.rzdir.fht-esslingen.de
   Verbindungslokale IPv6-Adresse  . : fe80::6051:d005:7784:47fd%11
   IPv4-Adresse  . . . . . . . . . . : 134.108.8.37
   Subnetzmaske  . . . . . . . . . . : 255.255.252.0
   Standardgateway . . . . . . . . . : 134.108.11.254

Ethernet-Adapter VMware Network Adapter VMnet1:

   Verbindungsspezifisches DNS-Suffix:
   Verbindungslokale IPv6-Adresse  . : fe80::38b3:236d:ff8:8a19%16
   IPv4-Adresse  . . . . . . . . . . : 192.168.110.1
   Subnetzmaske  . . . . . . . . . . : 255.255.255.0
   Standardgateway . . . . . . . . . :

Ethernet-Adapter VMware Network Adapter VMnet8:

   Verbindungsspezifisches DNS-Suffix:
   Verbindungslokale IPv6-Adresse  . : fe80::811e:824c:7506:61c8%17
   IPv4-Adresse  . . . . . . . . . . : 192.168.71.1
   Subnetzmaske  . . . . . . . . . . : 255.255.255.0
   Standardgateway . . . . . . . . . :

Ethernet-Adapter VirtualBox Host-Only Network:

   Verbindungsspezifisches DNS-Suffix:
   Verbindungslokale IPv6-Adresse  . : fe80::4917:2bb5:aa97:a5fa%19
   IPv4-Adresse  . . . . . . . . . . : 192.168.56.1
   Subnetzmaske  . . . . . . . . . . : 255.255.255.0
   Standardgateway . . . . . . . . . :

Ethernet-Adapter IPV6:

   Verbindungsspezifisches DNS-Suffix:
   IPv6-Adresse. . . . . . . . . . . : 2001:7c0:c00:19d:3c3d:b555:99e1:2a35
   Verbindungslokale IPv6-Adresse  . : fe80::3c3d:b555:99e1:2a35%12
   Standardgateway . . . . . . . . . : fe80::2e0:29ff:fe24:f2be%12
```

Figure 2.1: Node configuration for 134.108.8.37

2.2 Subnet internal IP Destination

In the first exercise we created traffic by using the PING-Command to send packets to another PC within the same subnet. Figure 2.2 shows the simplified architecture for this environment:

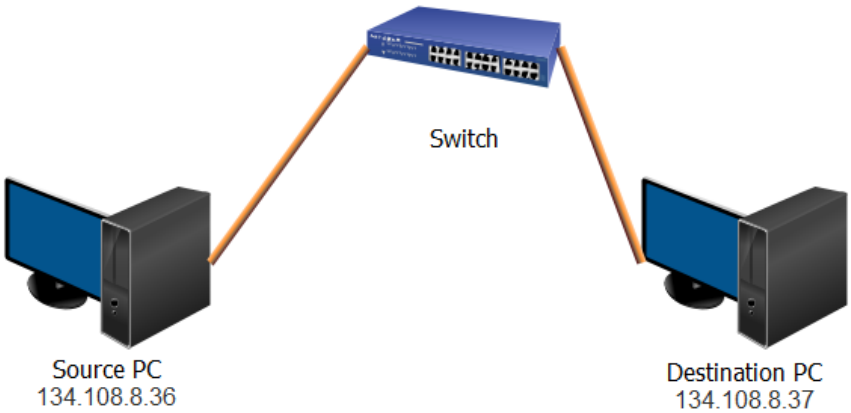

Figure 2.2: Source and Destination PC connected with a switch in the network lab

2.2.1 a) Basic PING command

The first task was sending a basic ping from one PC to another within the same subnet and capturing the sent packets using Wireshark. The PING-Command was:

ping -n 1 -l 64 134.108.8.37

Listing **??** shows the Wireshark trace for the captured packets. For this simple PING command, two ICMP packet were captured. One ICMP echo request was send from the source PC to the Destination PC and after this the Destination PC answers with an ICMP echo reqly. Both packets contain the Ethernet II frame as well as the IP and ICMP headers as discussed in chapter 2. Each packet has the source and destination address from the IP header as well as same sequence number. The total size of each packet is 106. It contains the source and target MAC-addresses from the Ethernet frame (both 6 byte), the type of the Ethernet frame (2 byte), the IP-header (20 byte), the ICMP-header (8 byte) and the transmitted data (64 byte).

,

```
No.     Time          Source              Destination    Protocol  Length Info
445 32.125568    134.108.8.36        134.108.8.37        ICMP     106    Echo (ping) request id=0x0001
    , seq=25/6400, ttl=128 (reply in 448)

Frame 445: 106 bytes on wire (848 bits), 106 bytes captured (848 bits) on interface 0
    Interface id: 0 (\\Device\\NPF\_{55902047-E973-4FFC-B9C0-B0FAC2DA73AF})
        Interface name: \\Device\\NPF\_{55902047-E973-4FFC-B9C0-B0FAC2DA73AF}
    Encapsulation type: Ethernet (1)
    Arrival Time: Nov 17, 2017 09:46:22.558509000 MitteleuropÃ¤ische Zeit
    [Time shift for this packet: 0.000000000 seconds]
    Epoch Time: 1510908382.558509000 seconds
    [Time delta from previous captured frame: 0.000092000 seconds]
    [Time delta from previous displayed frame: 0.000000000 seconds]
    [Time since reference or first frame: 32.125568000 seconds]
    Frame Number: 445
    Frame Length: 106 bytes (848 bits)
    Capture Length: 106 bytes (848 bits)
    [Frame is marked: True]
    [Frame is ignored: False]
    [Protocols in frame: eth:ethertype:ip:icmp:data]
    [Coloring Rule Name: ICMP]
    [Coloring Rule String: icmp || icmpv6]
Ethernet II, Src: Dell\_87:b7:aa (90:b1:1c:87:b7:aa), Dst: Dell\_88:97:76 (90:b1:1c:88:97:76)
    Destination: Dell\_88:97:76 (90:b1:1c:88:97:76)
        Address: Dell\_88:97:76 (90:b1:1c:88:97:76)
        .... ..0. .... .... .... .... = LG bit: Globally unique address (factory default)
        .... ...0 .... .... .... .... = IG bit: Individual address (unicast)
    Source: Dell\_87:b7:aa (90:b1:1c:87:b7:aa)
```

```
        Address: Dell\_87:b7:aa (90:b1:1c:87:b7:aa)
        .... ..0. .... .... .... .... = LG bit: Globally unique address (factory default)
        .... ...0 .... .... .... .... = IG bit: Individual address (unicast)
    Type: IPv4 (0x0800)
Internet Protocol Version 4, Src: 134.108.8.36, Dst: 134.108.8.37
    0100 .... = Version: 4
    .... 0101 = Header Length: 20 bytes (5)
    Differentiated Services Field: 0x00 (DSCP: CS0, ECN: Not-ECT)
        0000 00.. = Differentiated Services Codepoint: Default (0)
        .... ..00 = Explicit Congestion Notification: Not ECN-Capable Transport (0)
    Total Length: 92
    Identification: 0x30fb (12539)
    Flags: 0x00
        0... .... = Reserved bit: Not set
        .0.. .... = DonÂ´t fragment: Not set
        ..0. .... = More fragments: Not set
    Fragment offset: 0
    Time to live: 128
    Protocol: ICMP (1)
    Header checksum: 0xec84 [validation disabled]
    [Header checksum status: Unverified]
    Source: 134.108.8.36
    Destination: 134.108.8.37
    [Source GeoIP: Unknown]
    [Destination GeoIP: Unknown]
Internet Control Message Protocol
    Type: 8 (Echo (ping) request)
    Code: 0
    Checksum: 0x856a [correct]
    [Checksum Status: Good]
    Identifier (BE): 1 (0x0001)
    Identifier (LE): 256 (0x0100)
    Sequence number (BE): 25 (0x0019)
    Sequence number (LE): 6400 (0x1900)
    [Response frame: 448]
    Data (64 bytes)

0000  61 62 63 64 65 66 67 68 69 6a 6b 6c 6d 6e 6f 70 abcdefghijklmnop
0010  71 72 73 74 75 76 77 61 62 63 64 65 66 67 68 69 qrstuvwabcdefghi
0020  6a 6b 6c 6d 6e 6f 70 71 72 73 74 75 76 77 61 62 jklmnopqrstuvwab
0030  63 64 65 66 67 68 69 6a 6b 6c 6d 6e 6f 70 71 72 cdefghijklmnopqr
    Data: 6162636465666768696a6b6c6d6e6f707172737475767761...
    [Length: 64]

No.    Time          Source              Destination         Protocol Length Info
448 32.125797    134.108.8.37        134.108.8.36        ICMP     106    Echo (ping) reply  id=0x0001,
     seq=25/6400, ttl=128 (request in 445)

Frame 448: 106 bytes on wire (848 bits), 106 bytes captured (848 bits) on interface 0
    Interface id: 0 (\\Device\\NPF\_{55902047-E973-4FFC-B9C0-B0FAC2DA73AF})
```

```
        Interface name: \\Device\\NPF\_{55902047-E973-4FFC-B9C0-B0FAC2DA73AF}
    Encapsulation type: Ethernet (1)
    Arrival Time: Nov 17, 2017 09:46:22.558738000 MitteleuropÃ¤ische Zeit
    [Time shift for this packet: 0.000000000 seconds]
    Epoch Time: 1510908382.558738000 seconds
    [Time delta from previous captured frame: 0.000005000 seconds]
    [Time delta from previous displayed frame: 0.000229000 seconds]
    [Time since reference or first frame: 32.125797000 seconds]
    Frame Number: 448
    Frame Length: 106 bytes (848 bits)
    Capture Length: 106 bytes (848 bits)
    [Frame is marked: True]
    [Frame is ignored: False]
    [Protocols in frame: eth:ethertype:ip:icmp:data]
    [Coloring Rule Name: ICMP]
    [Coloring Rule String: icmp || icmpv6]
Ethernet II, Src: Dell\_88:97:76 (90:b1:1c:88:97:76), Dst: Dell\_87:b7:aa (90:b1:1c:87:b7:aa)
    Destination: Dell\_87:b7:aa (90:b1:1c:87:b7:aa)
        Address: Dell\_87:b7:aa (90:b1:1c:87:b7:aa)
        .... ..0. .... .... .... .... = LG bit: Globally unique address (factory default)
        .... ...0 .... .... .... .... = IG bit: Individual address (unicast)
    Source: Dell\_88:97:76 (90:b1:1c:88:97:76)
        Address: Dell\_88:97:76 (90:b1:1c:88:97:76)
        .... ..0. .... .... .... .... = LG bit: Globally unique address (factory default)
        .... ...0 .... .... .... .... = IG bit: Individual address (unicast)
Type: IPv4 (0x0800)
Internet Protocol Version 4, Src: 134.108.8.37, Dst: 134.108.8.36
    0100 .... = Version: 4
    .... 0101 = Header Length: 20 bytes (5)
    Differentiated Services Field: 0x00 (DSCP: CS0, ECN: Not-ECT)
        0000 00.. = Differentiated Services Codepoint: Default (0)
        .... ..00 = Explicit Congestion Notification: Not ECN-Capable Transport (0)
    Total Length: 92
    Identification: 0x3021 (12321)
    Flags: 0x00
        0... .... = Reserved bit: Not set
        .0.. .... = DonÂ´t fragment: Not set
        ..0. .... = More fragments: Not set
    Fragment offset: 0
    Time to live: 128
    Protocol: ICMP (1)
    Header checksum: 0x0000 [validation disabled]
    [Header checksum status: Unverified]
    Source: 134.108.8.37
    Destination: 134.108.8.36
    [Source GeoIP: Unknown]
    [Destination GeoIP: Unknown]
Internet Control Message Protocol
    Type: 0 (Echo (ping) reply)
    Code: 0
```

```
    Checksum: 0x8d6a [correct]
    [Checksum Status: Good]
    Identifier (BE): 1 (0x0001)
    Identifier (LE): 256 (0x0100)
    Sequence number (BE): 25 (0x0019)
    Sequence number (LE): 6400 (0x1900)
    [Request frame: 445]
    [Response time: 0.229 ms]
    Data (64 bytes)

0000  61 62 63 64 65 66 67 68 69 6a 6b 6c 6d 6e 6f 70 abcdefghijklmnop
0010  71 72 73 74 75 76 77 61 62 63 64 65 66 67 68 69 qrstuvwabcdefghi
0020  6a 6b 6c 6d 6e 6f 70 71 72 73 74 75 76 77 61 62 jklmnopqrstuvwab
0030  63 64 65 66 67 68 69 6a 6b 6c 6d 6e 6f 70 71 72 cdefghijklmnopqr
    Data: 6162636465666768696a6b6c6d6e6f707172737475767761...
    [Length: 64]
```

Listing 2.1: Wireshark trace for simple PING command

2.2.2 b) PING command with large data package

For the second exercise we had to execute a PING-Command with a very large data package of 2000 byte. The PING-Command was:

ping -n 1 -l 2000 134.108.8.36

Figure 2.3 shows the console output for this ping:

```
C:\Users\rn-labor>ping -n 1 -l 2000 134.108.8.36

Ping wird ausgeführt für 134.108.8.36 mit 2000 Bytes Daten:
Antwort von 134.108.8.36: Bytes=2000 Zeit<1ms TTL=128

Ping-Statistik für 134.108.8.36:
    Pakete: Gesendet = 1, Empfangen = 1, Verloren = 0
    (0% Verlust),
Ca. Zeitangaben in Millisek.:
    Minimum = 0ms, Maximum = 0ms, Mittelwert = 0ms
```

Figure 2.3: Console output for PING-Command with 2000 bytes data

It seems that the protocol ICMP does not have any problems with this as the console output shows no warning. IP however does have a problem with this large packet size. As the data exceeds the Maximum Transmission Unit, the packet must be fragmented and separated into two packets. The following listing is shortened, but shows the four packages sent between both lab-PCs:

,

```
No.     Time       Source              Destination         Protocol Length DestPort Info
                                                          Delta Time
236 0.000000   134.108.8.37        134.108.8.36        ICMP     1514           Echo (ping) request id=0
    x0001, seq=25/6400, ttl=128 (reply in 240) 0.000000

Frame 236: 1514 bytes on wire (12112 bits), 1514 bytes captured (12112 bits) on interface 0
    Interface id: 0 (\\Device\\NPF\_{55902047-E973-4FFC-B9C0-B0FAC2DA73AF})
    Interface name: \\Device\\NPF\_{55902047-E973-4FFC-B9C0-B0FAC2DA73AF}
    Encapsulation type: Ethernet (1)
    Arrival Time: Nov 17, 2017 09:58:38.374317000 MitteleuropÃ¤ische Zeit
    [Time shift for this packet: 0.000000000 seconds]
    Epoch Time: 1510909118.374317000 seconds
    [Time delta from previous captured frame: 0.000024000 seconds]
    [Time delta from previous displayed frame: 0.000000000 seconds]
    [Time since reference or first frame: 36.388239000 seconds]
    Frame Number: 236
    Frame Length: 1514 bytes (12112 bits)
    Capture Length: 1514 bytes (12112 bits)
    [Frame is marked: True]
    [Frame is ignored: False]
    [Protocols in frame: eth:ethertype:ip:icmp:data]
    [Coloring Rule Name: ICMP]
    [Coloring Rule String: icmp || icmpv6]
Ethernet II, Src: 90:b1:1c:88:97:76, Dst: 90:b1:1c:87:b7:aa
    Destination: 90:b1:1c:87:b7:aa
        Address: 90:b1:1c:87:b7:aa
        .... ..0. .... .... .... .... = LG bit: Globally unique address (factory default)
        .... ...0 .... .... .... .... = IG bit: Individual address (unicast)
    Source: 90:b1:1c:88:97:76
        Address: 90:b1:1c:88:97:76
        .... ..0. .... .... .... .... = LG bit: Globally unique address (factory default)
        .... ...0 .... .... .... .... = IG bit: Individual address (unicast)
    Type: IPv4 (0x0800)
Internet Protocol Version 4, Src: 134.108.8.37, Dst: 134.108.8.36
    0100 .... = Version: 4
    .... 0101 = Header Length: 20 bytes (5)
    Differentiated Services Field: 0x00 (DSCP: CS0, ECN: Not-ECT)
    0000 00.. = Differentiated Services Codepoint: Default (0)
    .... ..00 = Explicit Congestion Notification: Not ECN-Capable Transport (0)
    Total Length: 1500
    Identification: 0x3e7e (15998)
    Flags: 0x01 (More Fragments)
        0... .... = Reserved bit: Not set
        .0.. .... = DonÂ´t fragment: Not set
        ..1. .... = More fragments: Set
    Fragment offset: 0
    Time to live: 128
    Protocol: ICMP (1)
    Header checksum: 0x0000 [validation disabled]
```

```
    [Header checksum status: Unverified]
    Source: 134.108.8.37
    Destination: 134.108.8.36
    [Source GeoIP: Unknown]
    [Destination GeoIP: Unknown]
Internet Control Message Protocol
    Type: 8 (Echo (ping) request)
    Code: 0
    Checksum: 0x7b5e [unverified] [fragmented datagram]
    [Checksum Status: Unverified]
    Identifier (BE): 1 (0x0001)
    Identifier (LE): 256 (0x0100)
    Sequence number (BE): 25 (0x0019)
    Sequence number (LE): 6400 (0x1900)
    [Response frame: 240]
    Data (1472 bytes)

No.    Time       Source              Destination         Protocol Length DestPort Info
                                                         Delta Time
237 0.000007  134.108.8.37        134.108.8.36        IPv4    562            Fragmented IP protocol (
    proto=ICMP 1, off=1480, ID=3e7e)  0.000007

No.    Time       Source              Destination         Protocol Length DestPort Info
                                                         Delta Time
240 0.000488  134.108.8.36        134.108.8.37        ICMP    1514           Echo (ping) reply  id=0
    x0001, seq=25/6400, ttl=128 (request in 236) 0.000488

No.    Time       Source              Destination         Protocol Length DestPort Info
                                                         Delta Time
241 0.000002  134.108.8.36        134.108.8.37        IPv4    562            Fragmented IP protocol (
    proto=ICMP 1, off=1480, ID=332d)  0.000002
```

Listing 2.2: Wireshark trace for PING command with 2000 bytes data

It can be observed that the first packet occupies all 1514 bytes that can be sent in one ICMP packet. Subtracting the segments from the Ethernet frame (14 byte), the IP-header (20 byte) and the ICMP-header (8 byte), there is room for 1472 byte of raw data. The remaining 528 byte of data can't be transmitted in the same packet. So the data must be fragmented and sent inside another packet. As ICMP doesn't play a role in the fragmentation, it's header isn't needed anymore in the second packet. However the second packet contains the IP-header (20 byte) as it is the protocol that manages the fragmentation and transmission controlling. The segments for the Ethernet frame (14 byte) are also included, because without that there could not be any transmission at all. So summed up the second packet has a size of 562 byte.

2.2.3 c) PING command with 'don't fragment' flag

For this last exercise another PING with 2000 byte of data was executed. But this time the 'don't fragment' flag **-f** was set:

ping -n 1 -l 2000 134.108.8.36 -f

This causes a problem, because as discussed in the previous chapter this large amount of data cannot be transmitted in one single packet. So IP needs to fragment it into two separate packets. But in this case it receives the 'don't fragment' command. This contradicts the functionality of IP and it throws and error that ICMP recognizes and displays a message in the console:

```
C:\Users\rn-labor>ping -n 1 -l 2000 134.108.8.36 -f

Ping wird ausgeführt für 134.108.8.36 mit 2000 Bytes Daten:
Paket müsste fragmentiert werden, DF-Flag ist jedoch gesetzt.

Ping-Statistik für 134.108.8.36:
    Pakete: Gesendet = 1, Empfangen = 0, Verloren = 1
    (100% Verlust),
```

Figure 2.4: Console output for PING-Command with 2000 bytes data

There is no Wireshark trace for this exercise, because there were no packets sent to the destination PC.

2.3 Subnet external IP Destination

For this second part of the laboratory, we moved on to PING-commands where the destination address was located in another subnet. Both subnets were connected by a router that assigned a range of addresses to the computers inside each subnet. Each computer inside one of these subnets was connected to a switch that had a connection to the router and the router provided a host IP-address for both subnets. Figure 2.5 shows all involved network node and their IP-addresses.

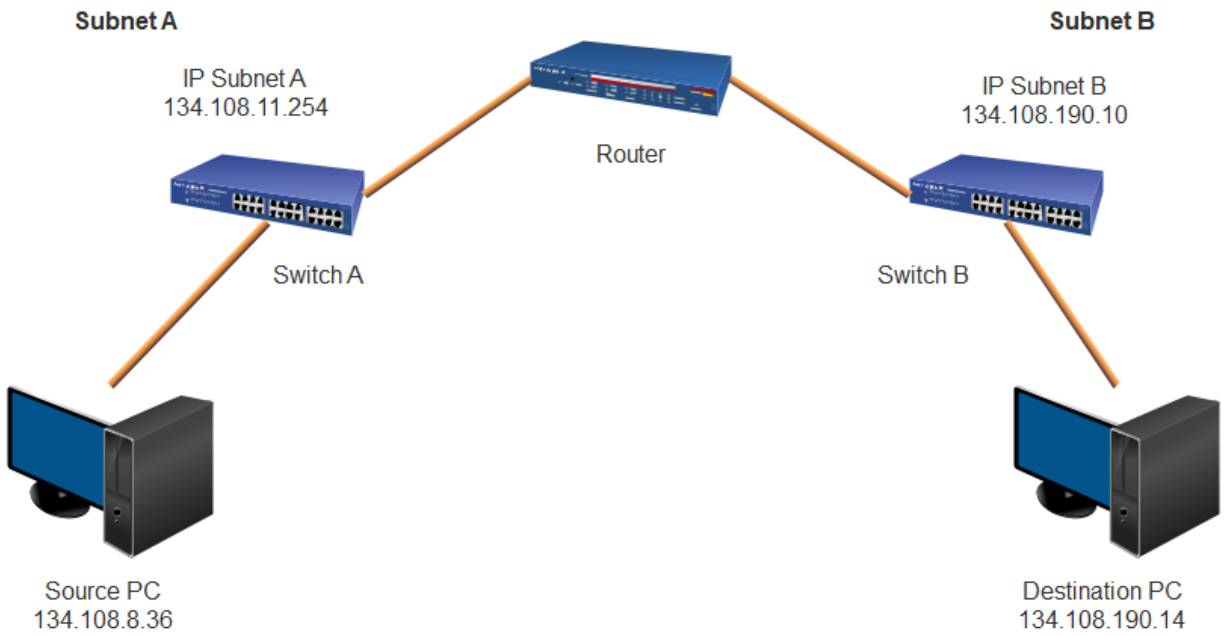

Figure 2.5: Two subnets in the network lab

2.3.1 d) Basic PING command with destination in another subnet

For this exercise the following PING-Command was used:

ping -n 1 -i 2 -r 4 134.108.190.10

The parameter **-r** activates the recoding of the route and sets the maximal number of records. **-i** indicates the 'Time to Live' in the IP-header (s. Chapter 2) and is basically nothing more than a hop-count that decrements, when the packet passes a network node (PCs or Routers in this case). When 'Time to Live' reaches zero, the packet will be abandoned. Figure 2.6 shows the output of the console command:

```
C:\Users\rn-labor>ping -n 1 -i 2 -r 4 134.108.190.10

Ping wird ausgeführt für 134.108.190.10 mit 32 Bytes Daten:
Antwort von 134.108.190.10: Bytes=32 Zeit<1ms TTL=63
    Route: 134.108.190.14 ->
           134.108.190.10 ->
           134.108.190.10 ->
           134.108.11.254

Ping-Statistik für 134.108.190.10:
    Pakete: Gesendet = 1, Empfangen = 1, Verloren = 0
    (0% Verlust),
Ca. Zeitangaben in Millisek.:
    Minimum = 0ms, Maximum = 0ms, Mittelwert = 0ms
```

Figure 2.6: PING Command with Destination in another subnet

The output shows the recorded route, the reply packet from the destination PC took trough the network. The sent packets are shown in the following listing:

,

```
No.     Time       Source              Destination         Protocol Length DestPort Info
                                                          Delta Time
49 0.000000   134.108.8.37        134.108.190.10      ICMP     94             Echo (ping) request id=0
    x0001, seq=37/9472, ttl=2 (reply in 50) 0.000000

Frame 49: 94 bytes on wire (752 bits), 94 bytes captured (752 bits) on interface 0
    Interface id: 0 (\\Device\\NPF\_{55902047-E973-4FFC-B9C0-B0FAC2DA73AF})
        Interface name: \\Device\\NPF\_{55902047-E973-4FFC-B9C0-B0FAC2DA73AF}
    Encapsulation type: Ethernet (1)
    Arrival Time: Nov 17, 2017 10:21:22.503562000 MitteleuropÃ¤ische Zeit
    [Time shift for this packet: 0.000000000 seconds]
    Epoch Time: 1510910482.503562000 seconds
    [Time delta from previous captured frame: 0.187068000 seconds]
    [Time delta from previous displayed frame: 0.000000000 seconds]
    [Time since reference or first frame: 2.480985000 seconds]
    Frame Number: 49
    Frame Length: 94 bytes (752 bits)
    Capture Length: 94 bytes (752 bits)
    [Frame is marked: True]
    [Frame is ignored: False]
    [Protocols in frame: eth:ethertype:ip:icmp:data]
    [Coloring Rule Name: ICMP]
    [Coloring Rule String: icmp || icmpv6]
    Ethernet II, Src: 90:b1:1c:88:97:76, Dst: 00:23:04:52:1c:00
    Destination: 00:23:04:52:1c:00
        Address: 00:23:04:52:1c:00
        .... ..0. .... .... .... .... = LG bit: Globally unique address (factory default)
        .... ...0 .... .... .... .... = IG bit: Individual address (unicast)
    Source: 90:b1:1c:88:97:76
        Address: 90:b1:1c:88:97:76
        .... ..0. .... .... .... .... = LG bit: Globally unique address (factory default)
        .... ...0 .... .... .... .... = IG bit: Individual address (unicast)
    Type: IPv4 (0x0800)
Internet Protocol Version 4, Src: 134.108.8.37, Dst: 134.108.190.10
    0100 .... = Version: 4
    .... 1010 = Header Length: 40 bytes (10)
    Differentiated Services Field: 0x00 (DSCP: CS0, ECN: Not-ECT)
    0000 00.. = Differentiated Services Codepoint: Default (0)
    .... ..00 = Explicit Congestion Notification: Not ECN-Capable Transport (0)
    Total Length: 80
    Identification: 0x42d5 (17109)
    Flags: 0x00
        0... .... = Reserved bit: Not set
        .0.. .... = DonÃ´t fragment: Not set
        ..0. .... = More fragments: Not set
    Fragment offset: 0
```

```
    Time to live: 2
    [Expert Info (Note/Sequence): "Time To Live" only 2]
    ["Time To Live" only 2]
    [Severity level: Note]
    [Group: Sequence]
    Protocol: ICMP (1)
    Header checksum: 0x0000 [validation disabled]
    [Header checksum status: Unverified]
    Source: 134.108.8.37
    Destination: 134.108.190.10
    [Source GeoIP: Unknown]
    [Destination GeoIP: Unknown]
    Options: (20 bytes), Record Route
        IP Option - Record Route (19 bytes)
            Type: 7
            0... .... = Copy on fragmentation: No
            .00. .... = Class: Control (0)
            ...0 0111 = Number: Record route (7)
            Length: 19
            Pointer: 4
            Empty Route: 0.0.0.0 <- (next)
            Empty Route: 0.0.0.0
            Empty Route: 0.0.0.0
            Empty Route: 0.0.0.0
        IP Option - End of Options List (EOL)
            Type: 0
            0... .... = Copy on fragmentation: No
            .00. .... = Class: Control (0)
            ...0 0000 = Number: End of Option List (EOL) (0)
Internet Control Message Protocol
    Type: 8 (Echo (ping) request)
    Code: 0
    Checksum: 0x4d36 [correct]
    [Checksum Status: Good]
    Identifier (BE): 1 (0x0001)
    Identifier (LE): 256 (0x0100)
    Sequence number (BE): 37 (0x0025)
    Sequence number (LE): 9472 (0x2500)
    [Response frame: 50]
    Data (32 bytes)

    0000  61 62 63 64 65 66 67 68 69 6a 6b 6c 6d 6e 6f 70 abcdefghijklmnop
    0010  71 72 73 74 75 76 77 61 62 63 64 65 66 67 68 69 qrstuvwabcdefghi
    Data: 6162636465666768696a6b6c6d6e6f707172737475767761...
    Text: abcdefghijklmnopqrstuvwabcdefghi
    [Length: 32]

No.    Time       Source              Destination         Protocol Length DestPort Info
                                                          Delta Time
```

```
50 0.000692   134.108.190.10      134.108.8.37        ICMP    94            Echo (ping) reply  id=0
    x0001, seq=37/9472, ttl=63 (request in 49) 0.000692

Frame 50: 94 bytes on wire (752 bits), 94 bytes captured (752 bits) on interface 0
    Interface id: 0 (\\Device\\NPF\_{55902047-E973-4FFC-B9C0-B0FAC2DA73AF})
        Interface name: \\Device\\NPF\_{55902047-E973-4FFC-B9C0-B0FAC2DA73AF}
    Encapsulation type: Ethernet (1)
    Arrival Time: Nov 17, 2017 10:21:22.504254000 MitteleuropÃ¤ische Zeit
    [Time shift for this packet: 0.000000000 seconds]
    Epoch Time: 1510910482.504254000 seconds
    [Time delta from previous captured frame: 0.000692000 seconds]
    [Time delta from previous displayed frame: 0.000692000 seconds]
    [Time since reference or first frame: 2.481677000 seconds]
    Frame Number: 50
    Frame Length: 94 bytes (752 bits)
    Capture Length: 94 bytes (752 bits)
    [Frame is marked: True]
    [Frame is ignored: False]
    [Protocols in frame: eth:ethertype:ip:icmp:data]
    [Coloring Rule Name: ICMP]
    [Coloring Rule String: icmp || icmpv6]
Ethernet II, Src: 00:23:04:52:1c:00, Dst: 90:b1:1c:88:97:76
    Destination: 90:b1:1c:88:97:76
        Address: 90:b1:1c:88:97:76
        .... ..0. .... .... .... .... = LG bit: Globally unique address (factory default)
        .... ...0 .... .... .... .... = IG bit: Individual address (unicast)
    Source: 00:23:04:52:1c:00
        Address: 00:23:04:52:1c:00
        .... ..0. .... .... .... .... = LG bit: Globally unique address (factory default)
        .... ...0 .... .... .... .... = IG bit: Individual address (unicast)
        Type: IPv4 (0x0800)
Internet Protocol Version 4, Src: 134.108.190.10, Dst: 134.108.8.37
    0100 .... = Version: 4
    .... 1010 = Header Length: 40 bytes (10)
    Differentiated Services Field: 0x00 (DSCP: CS0, ECN: Not-ECT)
    0000 00.. = Differentiated Services Codepoint: Default (0)
    .... ..00 = Explicit Congestion Notification: Not ECN-Capable Transport (0)
    Total Length: 80
    Identification: 0x048f (1167)
    Flags: 0x00
        0... .... = Reserved bit: Not set
        .0.. .... = DonÂ´t fragment: Not set
        ..0. .... = More fragments: Not set
    Fragment offset: 0
    Time to live: 63
    Protocol: ICMP (1)
    Header checksum: 0xafa3 [validation disabled]
    [Header checksum status: Unverified]
    Source: 134.108.190.10
    Destination: 134.108.8.37
```

```
    [Source GeoIP: Unknown]
    [Destination GeoIP: Unknown]
    Options: (20 bytes), Record Route
        IP Option - Record Route (19 bytes)
            Type: 7
            0... .... = Copy on fragmentation: No
            .00. .... = Class: Control (0)
            ...0 0111 = Number: Record route (7)
            Length: 19
            Pointer: 20
            Recorded Route: 134.108.190.14
            Recorded Route: 134.108.190.10
            Recorded Route: 134.108.190.10
            Recorded Route: 134.108.11.254
        IP Option - End of Options List (EOL)
            Type: 0
            0... .... = Copy on fragmentation: No
            .00. .... = Class: Control (0)
            ...0 0000 = Number: End of Option List (EOL) (0)
Internet Control Message Protocol
    Type: 0 (Echo (ping) reply)
    Code: 0
    Checksum: 0x5536 [correct]
    [Checksum Status: Good]
    Identifier (BE): 1 (0x0001)
    Identifier (LE): 256 (0x0100)
    Sequence number (BE): 37 (0x0025)
    Sequence number (LE): 9472 (0x2500)
    [Request frame: 49]
    [Response time: 0.692 ms]
    Data (32 bytes)

0000  61 62 63 64 65 66 67 68 69 6a 6b 6c 6d 6e 6f 70 abcdefghijklmnop
0010  71 72 73 74 75 76 77 61 62 63 64 65 66 67 68 69 qrstuvwabcdefghi
Data: 6162636465666768696a6b6c6d6e6f707172737475767761...
Text: abcdefghijklmnopqrstuvwabcdefghi
[Length: 32]
```

Listing 2.3: Wireshark trace for PING command in another subnet

2.3.2 e) PING command with reduced 'time to live'

In this exercise the 'Time to Live' was reduced to 1 in the PING-Command:

ping -n 1 -i 1 -r 4 134.108.190.10

This causes a Time-To-Live-Exceeded error that was displayed in the console output:

```
C:\Users\rn-labor>ping -n 1 -i 1 -r 4 134.108.190.10

Ping wird ausgeführt für 134.108.190.10 mit 32 Bytes Daten:
Antwort von 134.108.11.254: Die Gültigkeitsdauer wurde bei der Übertragung übers
chritten.

Ping-Statistik für 134.108.190.10:
    Pakete: Gesendet = 1, Empfangen = 1, Verloren = 0
    (0% Verlust),
```

Figure 2.7: PING Command with reduced Time to Live

As the 'Time to Live' is reduced to 1, it cannot reach the destination PC. When bypassing the router, the TTL is decreased to zero. So the router will drop the packet and send the Time-To-Live-Exceeded error back to the source, while the destination PC never receives any traffic. The only packet sent is from the source to the router. This can be seen in the following Wireshark trace:

,

```
No.    Time       Source              Destination         Protocol Length DestPort Info
                                                          Delta Time
37 0.000000   134.108.8.37        134.108.190.10      ICMP    94             Echo (ping) request id=0
    x0001, seq=38/9728, ttl=1 (no response found!) 0.000000

Frame 37: 94 bytes on wire (752 bits), 94 bytes captured (752 bits) on interface 0
    Interface id: 0 (\\Device\\NPF\_{55902047-E973-4FFC-B9C0-B0FAC2DA73AF})
        Interface name: \\Device\\NPF\_{55902047-E973-4FFC-B9C0-B0FAC2DA73AF}
    Encapsulation type: Ethernet (1)
    Arrival Time: Nov 17, 2017 10:23:18.619066000 MitteleuropÃ¤ische Zeit
    [Time shift for this packet: 0.000000000 seconds]
    Epoch Time: 1510910598.619066000 seconds
    [Time delta from previous captured frame: 0.145036000 seconds]
    [Time delta from previous displayed frame: 0.000000000 seconds]
    [Time since reference or first frame: 5.672194000 seconds]
    Frame Number: 37
    Frame Length: 94 bytes (752 bits)
    Capture Length: 94 bytes (752 bits)
    [Frame is marked: True]
    [Frame is ignored: False]
    [Protocols in frame: eth:ethertype:ip:icmp:data]
    [Coloring Rule Name: ICMP]
    [Coloring Rule String: icmp || icmpv6]
    Ethernet II, Src: 90:b1:1c:88:97:76, Dst: 00:23:04:52:1c:00
    Destination: 00:23:04:52:1c:00
        Address: 00:23:04:52:1c:00
        .... ..0. .... .... .... .... = LG bit: Globally unique address (factory default)
        .... ...0 .... .... .... .... = IG bit: Individual address (unicast)
    Source: 90:b1:1c:88:97:76
        Address: 90:b1:1c:88:97:76
        .... ..0. .... .... .... .... = LG bit: Globally unique address (factory default)
```

```
        .... ...0 .... .... .... .... = IG bit: Individual address (unicast)
    Type: IPv4 (0x0800)
Internet Protocol Version 4, Src: 134.108.8.37, Dst: 134.108.190.10
    0100 .... = Version: 4
    .... 1010 = Header Length: 40 bytes (10)
    Differentiated Services Field: 0x00 (DSCP: CS0, ECN: Not-ECT)
        0000 00.. = Differentiated Services Codepoint: Default (0)
        .... ..00 = Explicit Congestion Notification: Not ECN-Capable Transport (0)
    Total Length: 80
    Identification: 0x42d9 (17113)
    Flags: 0x00
        0... .... = Reserved bit: Not set
        .0.. .... = DonÂ´t fragment: Not set
        ..0. .... = More fragments: Not set
    Fragment offset: 0
    Time to live: 1
    [Expert Info (Note/Sequence): "Time To Live" only 1]
    ["Time To Live" only 1]
    [Severity level: Note]
    [Group: Sequence]
    Protocol: ICMP (1)
    Header checksum: 0x0000 [validation disabled]
    [Header checksum status: Unverified]
    Source: 134.108.8.37
    Destination: 134.108.190.10
    [Source GeoIP: Unknown]
    [Destination GeoIP: Unknown]
    Options: (20 bytes), Record Route
        IP Option - Record Route (19 bytes)
            Type: 7
            0... .... = Copy on fragmentation: No
            .00. .... = Class: Control (0)
            ...0 0111 = Number: Record route (7)
            Length: 19
            Pointer: 4
                Empty Route: 0.0.0.0 <- (next)
                Empty Route: 0.0.0.0
                Empty Route: 0.0.0.0
                Empty Route: 0.0.0.0
    IP Option - End of Options List (EOL)
        Type: 0
        0... .... = Copy on fragmentation: No
        .00. .... = Class: Control (0)
        ...0 0000 = Number: End of Option List (EOL) (0)
Internet Control Message Protocol
    Type: 8 (Echo (ping) request)
    Code: 0
    Checksum: 0x4d35 [correct]
    [Checksum Status: Good]
    Identifier (BE): 1 (0x0001)
```

```
    Identifier (LE): 256 (0x0100)
    Sequence number (BE): 38 (0x0026)
    Sequence number (LE): 9728 (0x2600)
    [No response seen]
    [Expert Info (Warning/Sequence): No response seen to ICMP request]
    [No response seen to ICMP request]
    [Severity level: Warning]
    [Group: Sequence]
Data (32 bytes)

    0000  61 62 63 64 65 66 67 68 69 6a 6b 6c 6d 6e 6f 70 abcdefghijklmnop
    0010  71 72 73 74 75 76 77 61 62 63 64 65 66 67 68 69 qrstuvwabcdefghi
    Data: 6162636465666768696a6b6c6d6e6f707172737475767761...
    Text: abcdefghijklmnopqrstuvwabcdefghi
    [Length: 32]
```

Listing 2.4: Wireshark trace for PING command with reduced TTL

2.3.3 f) PING command with timestamps

In this exercise the 'timestamp' option was used in the PING-Command:

ping -n 1 -i 2 -s 4 134.108.190.10

The timestamp option has the effect that a timestamp which represents the amount of time from midnight to the exact moment, the packet bypasses a network node, is recorded in milliseconds:

```
C:\Users\rn-labor>ping -n 1 -i 2 -s 4 134.108.190.10

Ping wird ausgeführt für 134.108.190.10 mit 32 Bytes Daten:
Antwort von 134.108.190.10: Bytes=32 Zeit<1ms TTL=63
    Zeitstempel: 134.108.190.14 : 34336822 ->
                 134.108.190.10 : 34336823 ->
                 134.108.190.10 : 34336823 ->
                 134.108.11.254 : 34336823

Ping-Statistik für 134.108.190.10:
    Pakete: Gesendet = 1, Empfangen = 1, Verloren = 0
    (0% Verlust),
Ca. Zeitangaben in Millisek.:
    Minimum = 0ms, Maximum = 0ms, Mittelwert = 0ms
```

Figure 2.8: PING Command with timestamp option

The time difference between the sending from the destination PC and the bypassing of the router is only 1 ms as seen in Figure 2.8. The Options Field in the IP-header contains the timestamps as seen in the following listing: ,

```
No.     Time       Source              Destination         Protocol Length DestPort Info
                                                          Delta Time
51 0.000778   134.108.190.10      134.108.8.37        ICMP     110            Echo (ping) reply  id=0
    x0001, seq=43/11008, ttl=63 (request in 50) 0.000778

Frame 51: 110 bytes on wire (880 bits), 110 bytes captured (880 bits) on interface 0
    Interface id: 0 (\\Device\\NPF\_{55902047-E973-4FFC-B9C0-B0FAC2DA73AF})
        Interface name: \\Device\\NPF\_{55902047-E973-4FFC-B9C0-B0FAC2DA73AF}
    Encapsulation type: Ethernet (1)
    Arrival Time: Nov 17, 2017 10:32:16.698574000 MitteleuropÃ¤ische Zeit
    [Time shift for this packet: 0.000000000 seconds]
    Epoch Time: 1510911136.698574000 seconds
    [Time delta from previous captured frame: 0.000778000 seconds]
    [Time delta from previous displayed frame: 0.000778000 seconds]
    [Time since reference or first frame: 3.015108000 seconds]
    Frame Number: 51
    Frame Length: 110 bytes (880 bits)
    Capture Length: 110 bytes (880 bits)
    [Frame is marked: True]
    [Frame is ignored: False]
    [Protocols in frame: eth:ethertype:ip:icmp:data]
    [Coloring Rule Name: ICMP]
    [Coloring Rule String: icmp || icmpv6]
    Ethernet II, Src: 00:23:04:52:1c:00, Dst: 90:b1:1c:88:97:76
    Destination: 90:b1:1c:88:97:76
        Address: 90:b1:1c:88:97:76
        .... ..0. .... .... .... .... = LG bit: Globally unique address (factory default)
        .... ...0 .... .... .... .... = IG bit: Individual address (unicast)
    Source: 00:23:04:52:1c:00
        Address: 00:23:04:52:1c:00
        .... ..0. .... .... .... .... = LG bit: Globally unique address (factory default)
        .... ...0 .... .... .... .... = IG bit: Individual address (unicast)
    Type: IPv4 (0x0800)
Internet Protocol Version 4, Src: 134.108.190.10, Dst: 134.108.8.37
    0100 .... = Version: 4
    .... 1110 = Header Length: 56 bytes (14)
    Differentiated Services Field: 0x00 (DSCP: CS0, ECN: Not-ECT)
    0000 00.. = Differentiated Services Codepoint: Default (0)
    .... ..00 = Explicit Congestion Notification: Not ECN-Capable Transport (0)
    Total Length: 96
    Identification: 0x0490 (1168)
    Flags: 0x00
        0... .... = Reserved bit: Not set
        .0.. .... = DonÃ´t fragment: Not set
        ..0. .... = More fragments: Not set
    Fragment offset: 0
    Time to live: 63
    Protocol: ICMP (1)
```

```
    Header checksum: 0x0901 [validation disabled]
    [Header checksum status: Unverified]
    Source: 134.108.190.10
    Destination: 134.108.8.37
    [Source GeoIP: Unknown]
    [Destination GeoIP: Unknown]
    Options: (36 bytes), Time Stamp
        IP Option - Time Stamp (36 bytes)
            Type: 68
                0... .... = Copy on fragmentation: No
                .10. .... = Class: Debugging and measurement (2)
                ...0 0100 = Number: Time stamp (4)
            Length: 36
            Pointer: 37
            0000 .... = Overflow: 0
            .... 0001 = Flag: Time stamp and address (0x1)
            Address: 134.108.190.14
            Time stamp: 34336822
            Address: 134.108.190.10
            Time stamp: 34336823
            Address: 134.108.190.10
            Time stamp: 34336823
            Address: 134.108.11.254
            Time stamp: 34336823
Internet Control Message Protocol
    Type: 0 (Echo (ping) reply)
    Code: 0
    Checksum: 0x5530 [correct]
    [Checksum Status: Good]
    Identifier (BE): 1 (0x0001)
    Identifier (LE): 256 (0x0100)
    Sequence number (BE): 43 (0x002b)
    Sequence number (LE): 11008 (0x2b00)
    [Request frame: 50]
    [Response time: 0.778 ms]
Data (32 bytes)

    0000  61 62 63 64 65 66 67 68 69 6a 6b 6c 6d 6e 6f 70 abcdefghijklmnop
    0010  71 72 73 74 75 76 77 61 62 63 64 65 66 67 68 69 qrstuvwabcdefghi
    Data: 6162636465666768696a6b6c6d6e6f707172737475767761...
    Text: abcdefghijklmnopqrstuvwabcdefghi
    [Length: 32]
```

Listing 2.5: Wireshark trace for PING command with timestamps

2.4 ARP analysis

In the following exercises the Address Resolution Protocol was analyzed to achieve a better understanding how IP-Addresses are mapped to actual Hardware MAC-Addresses. ARP does exactly this by putting both address in relation together into a cache, also called the ARP table. Table **??** shows the header for ARP:

bits	0-7	8-15	16-23	24-31
bytes	1	2	3	4
Offset 0	Hardware-Addresstype (HTYPE)		Network Protocol Type (PTYPE)	
Offset 32	Hardware Address Length (HLEN)	Protocol Address Length (PLEN)	Operation	
Offset 64	Sender MAC-Address			
Offset 128	Sender MAC-Address		Sender IP Address	
Offset 160	Sender IP Address		Target MAC-Address	
Offset 192	Target MAC-Address			
Offset 224	Target IP-Address			

Table 2.5: Address Resolution Protocol Header

The following Figure 2.9 shows the ARP table obtained by typing 'arp -a' into the console from one of the network lab PCs before it was deleted for the next exercise:

```
C:\Users\rn-labor>arp -a

Schnittstelle: 134.108.8.37 --- 0xb
  Internetadresse       Physische Adresse     Typ
  134.108.8.4           b4-b5-2f-ac-d2-ed     dynamisch
  134.108.8.22          90-1b-0e-66-4f-a2     dynamisch
  134.108.8.32          90-b1-1c-88-98-19     dynamisch
  134.108.8.34          90-b1-1c-88-99-f0     dynamisch
  134.108.8.35          90-b1-1c-87-ad-47     dynamisch
  134.108.8.36          90-b1-1c-87-b7-aa     dynamisch
  134.108.8.48          90-b1-1c-87-b6-b9     dynamisch
  134.108.8.49          90-b1-1c-88-98-75     dynamisch
  134.108.8.51          90-b1-1c-87-b8-1f     dynamisch
  134.108.8.168         74-46-a0-a9-e8-52     dynamisch
  134.108.8.176         d8-cb-8a-7c-0a-07     dynamisch
  134.108.8.177         d8-cb-8a-7c-0a-14     dynamisch
  134.108.8.178         d8-cb-8a-7c-0a-78     dynamisch
  134.108.8.179         d8-cb-8a-7c-09-70     dynamisch
  134.108.8.180         d8-cb-8a-7c-08-cb     dynamisch
  134.108.8.181         d8-cb-8a-7c-09-b6     dynamisch
  134.108.8.182         d8-cb-8a-7b-fe-bf     dynamisch
  134.108.8.183         d8-cb-8a-7b-ff-15     dynamisch
  134.108.8.184         d8-cb-8a-7c-0a-32     dynamisch
  134.108.8.185         d8-cb-8a-7c-09-61     dynamisch
  134.108.8.186         d8-cb-8a-7c-09-74     dynamisch
  134.108.8.187         d8-cb-8a-7c-0a-b9     dynamisch
  134.108.8.188         d8-cb-8a-7c-09-7e     dynamisch
  134.108.8.190         d8-cb-8a-7c-09-34     dynamisch
  134.108.8.191         d8-cb-8a-7c-09-e0     dynamisch
  134.108.8.213         18-03-73-3b-3e-76     dynamisch
  134.108.10.227        50-26-90-17-c9-a4     dynamisch
  134.108.11.254        00-23-04-52-1c-00     dynamisch
  224.0.0.22            01-00-5e-00-00-16     statisch
  224.0.0.251           01-00-5e-00-00-fb     statisch
  224.0.0.252           01-00-5e-00-00-fc     statisch
  230.0.0.1             01-00-5e-00-00-01     statisch
  239.255.255.250       01-00-5e-7f-ff-fa     statisch
  255.255.255.255       ff-ff-ff-ff-ff-ff     statisch

Schnittstelle: 192.168.31.6 --- 0xd
  Internetadresse       Physische Adresse     Typ
  224.0.0.22            01-00-5e-00-00-16     statisch
  224.0.0.251           01-00-5e-00-00-fb     statisch
  224.0.0.252           01-00-5e-00-00-fc     statisch
  230.0.0.1             01-00-5e-00-00-01     statisch
  239.255.255.250       01-00-5e-7f-ff-fa     statisch

Schnittstelle: 192.168.110.1 --- 0x10
  Internetadresse       Physische Adresse     Typ
  192.168.110.255       ff-ff-ff-ff-ff-ff     statisch
  224.0.0.22            01-00-5e-00-00-16     statisch
  224.0.0.251           01-00-5e-00-00-fb     statisch
  224.0.0.252           01-00-5e-00-00-fc     statisch
  230.0.0.1             01-00-5e-00-00-01     statisch
  239.255.255.250       01-00-5e-7f-ff-fa     statisch

Schnittstelle: 192.168.71.1 --- 0x11
  Internetadresse       Physische Adresse     Typ
  192.168.71.255        ff-ff-ff-ff-ff-ff     statisch
  224.0.0.22            01-00-5e-00-00-16     statisch
  224.0.0.251           01-00-5e-00-00-fb     statisch
  224.0.0.252           01-00-5e-00-00-fc     statisch
  230.0.0.1             01-00-5e-00-00-01     statisch
  239.255.255.250       01-00-5e-7f-ff-fa     statisch

Schnittstelle: 192.168.56.1 --- 0x13
  Internetadresse       Physische Adresse     Typ
  192.168.56.255        ff-ff-ff-ff-ff-ff     statisch
  224.0.0.22            01-00-5e-00-00-16     statisch
  224.0.0.251           01-00-5e-00-00-fb     statisch
  224.0.0.252           01-00-5e-00-00-fc     statisch
  230.0.0.1             01-00-5e-00-00-01     statisch
  239.255.255.250       01-00-5e-7f-ff-fa     statisch
```

Figure 2.9: ARP table

2.4.1 a) Deleting the ARP cache

Now the ARP table on the source PC (134.108.8.37) was deleted using the console command 'arp -d'. After executing this, the ARP table was empty. After that another PING-Command was executed:

ping -n 2 134.108.8.36

The following figure shows the output of this Ping:

```
C:\Users\rn-labor>ping -n 2 134.108.8.36

Ping wird ausgeführt für 134.108.8.36 mit 32 Bytes Daten:
Antwort von 134.108.8.36: Bytes=32 Zeit<1ms TTL=128
Antwort von 134.108.8.36: Bytes=32 Zeit<1ms TTL=128

Ping-Statistik für 134.108.8.36:
    Pakete: Gesendet = 2, Empfangen = 2, Verloren = 0
    (0% Verlust),
Ca. Zeitangaben in Millisek.:
    Minimum = 0ms, Maximum = 0ms, Mittelwert = 0ms
```

Figure 2.10: PING Command Output after ARP table was deleted

Because the ARP table is now empty, IP has the problem that the target IP-Address cannot be resolved. This leads to the ARP request packet sent from the Source PC into the network via Broadcast as seen in Listing **??** asking who has the required Target IP Address. The PC inside the same subnet who owns this IP Address now answers with an ARP reply packet containing it's MAC-Address. Following this the source PC inserts a new mapping with the target PC's IP- and MAC-Address into it's ARP table. After that the two PINGs are executed as seen in the following Wireshark trace:

,

```
No.    Time       Source              Destination         Protocol Length DestPort Info
                                                         Delta Time
162 0.459379   90:b1:1c:88:97:76   ff:ff:ff:ff:ff:ff   ARP      42             Who has 134.108.8.36?
    Tell 134.108.8.37                   0.459379

Frame 162: 42 bytes on wire (336 bits), 42 bytes captured (336 bits) on interface 0
    Interface id: 0 (\\Device\\NPF\_{55902047-E973-4FFC-B9C0-B0FAC2DA73AF})
        Interface name: \\Device\\NPF\_{55902047-E973-4FFC-B9C0-B0FAC2DA73AF}
    Encapsulation type: Ethernet (1)
    Arrival Time: Nov 17, 2017 10:50:47.561364000 MitteleuropÃ¤ische Zeit
    [Time shift for this packet: 0.000000000 seconds]
    Epoch Time: 1510912247.561364000 seconds
    [Time delta from previous captured frame: 0.397775000 seconds]
```

```
    [Time delta from previous displayed frame: 0.459379000 seconds]
    [Time since reference or first frame: 1.803262000 seconds]
    Frame Number: 162
    Frame Length: 42 bytes (336 bits)
    Capture Length: 42 bytes (336 bits)
    [Frame is marked: True]
    [Frame is ignored: False]
    [Protocols in frame: eth:ethertype:arp]
    [Coloring Rule Name: ARP]
    [Coloring Rule String: arp]
Ethernet II, Src: 90:b1:1c:88:97:76, Dst: ff:ff:ff:ff:ff:ff
    Destination: ff:ff:ff:ff:ff:ff
        Address: ff:ff:ff:ff:ff:ff
        .... ..1. .... .... .... .... = LG bit: Locally administered address (this is NOT the
            factory default)
        .... ...1 .... .... .... .... = IG bit: Group address (multicast/broadcast)
    Source: 90:b1:1c:88:97:76
        Address: 90:b1:1c:88:97:76
        .... ..0. .... .... .... .... = LG bit: Globally unique address (factory default)
        .... ...0 .... .... .... .... = IG bit: Individual address (unicast)
    Type: ARP (0x0806)
Address Resolution Protocol (request)
    Hardware type: Ethernet (1)
    Protocol type: IPv4 (0x0800)
    Hardware size: 6
    Protocol size: 4
    Opcode: request (1)
    Sender MAC address: 90:b1:1c:88:97:76
    Sender IP address: 134.108.8.37
    Target MAC address: 00:00:00:00:00:00
    Target IP address: 134.108.8.36

No.    Time       Source              Destination         Protocol Length DestPort Info
                                                          Delta Time
163 0.000164   90:b1:1c:87:b7:aa   90:b1:1c:88:97:76   ARP     60             134.108.8.36 is at 90:b1
    :1c:87:b7:aa                      0.000164

Frame 163: 60 bytes on wire (480 bits), 60 bytes captured (480 bits) on interface 0
    Interface id: 0 (\\Device\\NPF\_{55902047-E973-4FFC-B9C0-B0FAC2DA73AF})
        Interface name: \\Device\\NPF\_{55902047-E973-4FFC-B9C0-B0FAC2DA73AF}
    Encapsulation type: Ethernet (1)
    Arrival Time: Nov 17, 2017 10:50:47.561528000 MitteleuropÃ¤ische Zeit
    [Time shift for this packet: 0.000000000 seconds]
    Epoch Time: 1510912247.561528000 seconds
    [Time delta from previous captured frame: 0.000164000 seconds]
    [Time delta from previous displayed frame: 0.000164000 seconds]
    [Time since reference or first frame: 1.803426000 seconds]
    Frame Number: 163
    Frame Length: 60 bytes (480 bits)
    Capture Length: 60 bytes (480 bits)
```

```
    [Frame is marked: True]
    [Frame is ignored: False]
    [Protocols in frame: eth:ethertype:arp]
    [Coloring Rule Name: ARP]
    [Coloring Rule String: arp]
Ethernet II, Src: 90:b1:1c:87:b7:aa, Dst: 90:b1:1c:88:97:76
    Destination: 90:b1:1c:88:97:76
        Address: 90:b1:1c:88:97:76
        .... ..0. .... .... .... .... = LG bit: Globally unique address (factory default)
        .... ...0 .... .... .... .... = IG bit: Individual address (unicast)
    Source: 90:b1:1c:87:b7:aa
        Address: 90:b1:1c:87:b7:aa
        .... ..0. .... .... .... .... = LG bit: Globally unique address (factory default)
        .... ...0 .... .... .... .... = IG bit: Individual address (unicast)
    Type: ARP (0x0806)
    Padding: 000000000000000000000000000000000000
Address Resolution Protocol (reply)
    Hardware type: Ethernet (1)
    Protocol type: IPv4 (0x0800)
    Hardware size: 6
    Protocol size: 4
    Opcode: reply (2)
    Sender MAC address: 90:b1:1c:87:b7:aa
    Sender IP address: 134.108.8.36
    Target MAC address: 90:b1:1c:88:97:76
    Target IP address: 134.108.8.37

No.    Time       Source              Destination         Protocol Length DestPort Info
                                                         Delta Time
164 0.000018   134.108.8.37        134.108.8.36        ICMP    74             Echo (ping) request id=0
    x0001, seq=52/13312, ttl=128 (reply in 165) 0.000018


No.    Time       Source              Destination         Protocol Length DestPort Info
                                                         Delta Time
165 0.000168   134.108.8.36        134.108.8.37        ICMP    74             Echo (ping) reply  id=0
    x0001, seq=52/13312, ttl=128 (request in 164) 0.000168


No.    Time       Source              Destination         Protocol Length DestPort Info
                                                         Delta Time
176 1.005949   134.108.8.37        134.108.8.36        ICMP    74             Echo (ping) request id=0
    x0001, seq=53/13568, ttl=128 (reply in 177) 1.005949


No.    Time       Source              Destination         Protocol Length DestPort Info
                                                         Delta Time
177 0.000271   134.108.8.36        134.108.8.37        ICMP    74             Echo (ping) reply  id=0
    x0001, seq=53/13568, ttl=128 (request in 176) 0.000271
```

Listing 2.6: Wireshark trace for PING command after deleting the ARP table

2.4.2 b) Shutting down one PC

For this second exercise the ARP-table on the source PC was deleted again. But this time, the target PC was shut down before the same Ping command as in **??** was executed. The following figure 2.11 shows the console output for the Ping-Command:

```
C:\Users\rn-labor>ping -n 2 134.108.8.36

Ping wird ausgeführt für 134.108.8.36 mit 32 Bytes Daten:
Antwort von 134.108.8.37: Zielhost nicht erreichbar.
Antwort von 134.108.8.37: Zielhost nicht erreichbar.

Ping-Statistik für 134.108.8.36:
    Pakete: Gesendet = 2, Empfangen = 2, Verloren = 0
    (0% Verlust),
```

Figure 2.11: PING Command Output after ARP table was deleted and target PC was shut down

Because the ARP table is empty, the source PC has to send another ARP request packet. But this time he receives no answer because the PC owning the required IP address is not reachable. The console output shows that the source PC tries to reach the target PC with another ARP request, but again there is no answer. So the communication is canceled after this. Listing **??** shows the two ARP request packet that were sent from the source PC via Broadcast.

,

```
No.    Time          Source              Destination         Protocol Length Info
21 2.895675     Dell\_88:97:76       Broadcast           ARP      42     Who has 134.108.8.36? Tell
    134.108.8.37

Frame 21: 42 bytes on wire (336 bits), 42 bytes captured (336 bits) on interface 0
Ethernet II, Src: Dell\_88:97:76 (90:b1:1c:88:97:76), Dst: Broadcast (ff:ff:ff:ff:ff:ff)
Address Resolution Protocol (request)

No.    Time          Source              Destination         Protocol Length Info
31 3.798686     Dell\_88:97:76       Broadcast           ARP      42     Who has 134.108.8.36? Tell
    134.108.8.37

Frame 31: 42 bytes on wire (336 bits), 42 bytes captured (336 bits) on interface 0
Ethernet II, Src: Dell\_88:97:76 (90:b1:1c:88:97:76), Dst: Broadcast (ff:ff:ff:ff:ff:ff)
Address Resolution Protocol (request)
```

Listing 2.7: Wireshark trace for PING command after deleting the ARP table and shutting down target PC

2.4.3 c) Reconnect after Reboot

After rebooting the target PC and reconnecting it to the network, the same PING-Command as in 2.4.1 was sent again from the source PC. Because now the target PC was reachable, the process and the outcome was exactly the same as in exercise 2.4.1.

2.5 IP multicast addressing

IP multicast addressing is used to send packets to groups of different IP addresses without broadcasting into the network. The are different protocols that are able to do this such as the Virtual Router Redundancy Protocol (VRRP), the Internet Group Management Protocol (IGMP), the routing protocol OSPF, the Network Time Protocol (NTP), the Simple Service Discovery Protocol (SSDP) and the Spanning Tree Protocol (STP).

The range for IP-Multicast Addresses is from 224.0.0.0 to 239.255.255.255. This can be seen when observing the intranet traffic of the Hochschule Esslingen. As a multicast packet contains a range of target IP-addresses, they cannot be exclusively mapped to a single MAC-address. So a trick is used here. The 23 lowest bits from the IP-address are put into the MAC-address. This leads to a range of MAC-addresses from 01-00-5e-00-00-00 to 01-00-5e-7f-ff-ff. The Downside is, that it is possible, that a single MAC-address can be referenced by multiple IP-Addresses. The following listing shows an SSDP packet captured from the traffic of the Hochschule Esslingen: ,

```
No.    Time          Source              Destination         Protocol Length Info
4 0.461068     134.108.8.33        239.255.255.250     SSDP    175    M-SEARCH * HTTP/1.1

Frame 4: 175 bytes on wire (1400 bits), 175 bytes captured (1400 bits) on interface 0
    Interface id: 0 (\\Device\\NPF\_{55902047-E973-4FFC-B9C0-B0FAC2DA73AF})
        Interface name: \\Device\\NPF\_{55902047-E973-4FFC-B9C0-B0FAC2DA73AF}
    Encapsulation type: Ethernet (1)
    Arrival Time: Nov 17, 2017 11:09:15.825997000 MitteleuropÃ¤ische Zeit
    [Time shift for this packet: 0.000000000 seconds]
    Epoch Time: 1510913355.825997000 seconds
    [Time delta from previous captured frame: 0.115495000 seconds]
    [Time delta from previous displayed frame: 0.115495000 seconds]
    [Time since reference or first frame: 0.461068000 seconds]
    Frame Number: 4
    Frame Length: 175 bytes (1400 bits)
    Capture Length: 175 bytes (1400 bits)
    [Frame is marked: False]
    [Frame is ignored: False]
    [Protocols in frame: eth:ethertype:ip:udp:ssdp]
```

```
    [Coloring Rule Name: UDP]
    [Coloring Rule String: udp]
    Ethernet II, Src: Dell\_87:b4:26 (90:b1:1c:87:b4:26), Dst: IPv4mcast\_7f:ff:fa (01:00:5e:7f:ff:
        fa)
    Destination: IPv4mcast\_7f:ff:fa (01:00:5e:7f:ff:fa)
        Address: IPv4mcast\_7f:ff:fa (01:00:5e:7f:ff:fa)
        .... ..0. .... .... .... .... = LG bit: Globally unique address (factory default)
        .... ...1 .... .... .... .... = IG bit: Group address (multicast/broadcast)
    Source: Dell\_87:b4:26 (90:b1:1c:87:b4:26)
        Address: Dell\_87:b4:26 (90:b1:1c:87:b4:26)
        .... ..0. .... .... .... .... = LG bit: Globally unique address (factory default)
        .... ...0 .... .... .... .... = IG bit: Individual address (unicast)
    Type: IPv4 (0x0800)
Internet Protocol Version 4, Src: 134.108.8.33, Dst: 239.255.255.250
    0100 .... = Version: 4
    .... 0101 = Header Length: 20 bytes (5)
    Differentiated Services Field: 0x00 (DSCP: CS0, ECN: Not-ECT)
        0000 00.. = Differentiated Services Codepoint: Default (0)
        .... ..00 = Explicit Congestion Notification: Not ECN-Capable Transport (0)
    Total Length: 161
    Identification: 0x2fc2 (12226)
    Flags: 0x00
        0... .... = Reserved bit: Not set
        .0.. .... = DonÂ´t fragment: Not set
        ..0. .... = More fragments: Not set
    Fragment offset: 0
    Time to live: 1
    Protocol: UDP (17)
    Header checksum: 0x0b03 [validation disabled]
    [Header checksum status: Unverified]
    Source: 134.108.8.33
    Destination: 239.255.255.250
    [Source GeoIP: Unknown]
    [Destination GeoIP: Unknown]
User Datagram Protocol, Src Port: 53552, Dst Port: 1900
    Source Port: 53552
    Destination Port: 1900
    Length: 141
    Checksum: 0x01c6 [unverified]
    [Checksum Status: Unverified]
    [Stream index: 0]
Simple Service Discovery Protocol
    M-SEARCH * HTTP/1.1\r\\n
        [Expert Info (Chat/Sequence): M-SEARCH * HTTP/1.1\r\\n]
            [M-SEARCH * HTTP/1.1\r\\n]
            [Severity level: Chat]
            [Group: Sequence]
        Request Method: M-SEARCH
        Request URI: *
        Request Version: HTTP/1.1
```

```
    Host:239.255.255.250:1900\r\\n
    ST:urn:schemas-upnp-org:device:InternetGatewayDevice:1\r\\n
    Man:"ssdp:discover"\r\\n
    MX:3\r\\n
    \r\\n
    [Full request URI: http://239.255.255.250:1900*]
    [HTTP request 1/19]
    [Next request in frame: 206]
```

Listing 2.8: A single SSDP packet

3 TCP analysis

In this second part of the laboratory the Transmission Control Protocol (TCP) was examined through various exercises showing it's functionality.
TCP is one layer above the protocols ICMP and IP in the transport layer of the OSI-model. It's main goal is to establish a stable connection between two hosts to ensure transmission of information without data loss. Other than the protocols one layer down in the Network Layer such as ICMP or IP, TCP provides enhanced functionality for transmission control, error recovery and handling for protocol errors. These functionalities will be shown in the exercises of this laboratory. Table **??** shows the TCP Header.

bits	0-3	4-7	8	9	10	11	12	13	14	15	16-23	24-31
bytes	1		2								3	4
Offset 0	source port										destination port	
Offset 32	sequence number											
Offset 64	acknowledgment number											
Offset 96	data offset	reserved	CWR	ECE	URG	ACK	PSH	RST	SYN	FIN	window	
Offset 128	checksum										urgent pointer	
Offset 160	options											

Table 3.1: Transmission Control Protocol Header

TCP does not handle the networking part of the communication. This task is still handled by IP, which is one layer below TCP in the protocol stack. This is why there are no source- or target address fields in the TCP header. Instead it has segments for source- and target ports. These are necessary because a program such as *Traffic*[1] is needed for the TCP communication and these programs run on a port on both hosts. Sequence and acknowledgment numbers are used for the synchronization and error recovery between server and client. These will be important for the exercises. The control flags (each of them is only one bit) are used for traffic handling. The protocol decides how to interpret the sent data based on the set flags. They are also used for connection establishment, connection reset and for terminating a connection.

[1] bla

3.1 Traffic generator handling

As mentioned above, simple PING-commands weren't enough for generating traffic using the Transmission Control Protocol. A program which occupies ports on both PCs (server and client) is needed to establish a TCP connection. For this exercise a tool named *Traffic* was used. The tool provides the functionality of a socket and can perform simple socket routines such as *socket*, *bind()*, *listen()*, *accept()*. It also provides a simple user interface where all functionalities are accessible for a user.

3.2 Simple TCP Communication

The first task in this laboratory was to establish a simple TCP-connection between a Server PC and a Client PC, sending multiple messages from client to server and vice versa, and finally releasing the connection.

3.2.1 Connection establishment

To establish a connection between server and client, TCP performs a routine known as the Three-Way-Handshake. The Three-Way-Handshake consists of three packets being transmitted between client and server. First, the client sends a TCP packet with the SYN-Flag containing a random number x as sequence number (s. header in chapter 3) to the server. If the server is reachable, it replies with a TCP packet with the SYN and ACK-flags being enabled. Furthermore this packet contains the incremented sequence number *x+1* from the client as acknowledgment number and a newly generated random number y as sequence number. Finally the client performs the last step of the Three-Way-Handshake by replying with another ACK-flagged TCP-packet, containing the incremented sequence number from the server *y+1* as acknowledgment number.
After these steps were successful, a stable connection is established and both client and server can begin to send data to each other. The following figure 3.1 shows the steps of the Three-Way-Handshake.

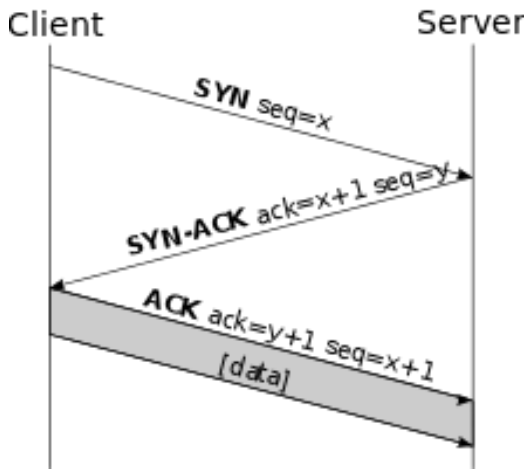

Figure 3.1: Three-Way-Handshake

The Wireshark-trace reveals some more details about the Three-Way-Handshake. As seen in listing **??** client and server also exchange information about the Maximum Segment Size (MSS). Furthermore both parties, the client and the server, set their window size which corresponds to the size of the buffer. When the buffer is completely occupied with data, no more data can be transfered until the buffer is cleaned by the receiver.

,

```
No.     Time          Source              Destination         Protocol Length Info
129 14.773660     134.108.8.37        134.108.8.36        TCP      66     51444 -> 6777 [SYN] Seq=0 Win
    =8192 Len=0 MSS=1460 WS=256 SACK\_PERM=1

Frame 129: 66 bytes on wire (528 bits), 66 bytes captured (528 bits) on interface 0
Ethernet II, Src: Dell\_88:97:76 (90:b1:1c:88:97:76), Dst: Dell\_87:b7:aa (90:b1:1c:87:b7:aa)
Internet Protocol Version 4, Src: 134.108.8.37, Dst: 134.108.8.36
Transmission Control Protocol, Src Port: 51444, Dst Port: 6777, Seq: 0, Len: 0

No.     Time          Source              Destination         Protocol Length Info
130 14.773711     134.108.8.36        134.108.8.37        TCP      66     6777 -> 51444 [SYN, ACK] Seq
    =0 Ack=1 Win=8192 Len=0 MSS=1460 WS=256 SACK\_PERM=1

Frame 130: 66 bytes on wire (528 bits), 66 bytes captured (528 bits) on interface 0
Ethernet II, Src: Dell\_87:b7:aa (90:b1:1c:87:b7:aa), Dst: Dell\_88:97:76 (90:b1:1c:88:97:76)
Internet Protocol Version 4, Src: 134.108.8.36, Dst: 134.108.8.37
Transmission Control Protocol, Src Port: 6777, Dst Port: 51444, Seq: 0, Ack: 1, Len: 0

No.     Time          Source              Destination         Protocol Length Info
131 14.773828     134.108.8.37        134.108.8.36        TCP      60     51444 -> 6777 [ACK] Seq=1 Ack
    =1 Win=65536 Len=0

Frame 131: 60 bytes on wire (480 bits), 60 bytes captured (480 bits) on interface 0
Ethernet II, Src: Dell\_88:97:76 (90:b1:1c:88:97:76), Dst: Dell\_87:b7:aa (90:b1:1c:87:b7:aa)
Internet Protocol Version 4, Src: 134.108.8.37, Dst: 134.108.8.36
```

```
Transmission Control Protocol, Src Port: 51444, Dst Port: 6777, Seq: 1, Ack: 1, Len: 0
```

Listing 3.1: Wireshark trace for Three-Way-Handshake

3.2.2 Data transfer

After the successful establishment of the TCP connection, multiple messages were transmitted between client and server. the Wireshark trace **??** shows all the packets in chronological order. All packets have in common that the PSH and ACK flags are enabled.

The first message was sent from client to server and contained 100 bytes of data. Because this was the first packet after the Three-Way-Handshake, both acknowledgment and sequence numbers are 1. The server answers with an ACK-packet, where the acknowledgment number is now 101. This is because the data size of the previous packet sent from client to server is added to the acknowledgment number. Also the data size is subtracted from the buffer size.

The second message sent from client to server is much larger, containing 1000 bytes of data. The procedure is the same as for the first message. The only difference is, that the sequence number of the packet is now 101 because of the previous ACK-Packet from the server. The server answers with and ACK-packet where the acknowledgment number is now 1101. Again the data size was added here and subtracted from the buffer size of the server. The sequence number is still 1, because the server hasn't sent any data to the client yet. The window-size of the server however is now reduced to 252, because the data has not been read from the buffer yet.

The third message follows the same procedure as message 1, but of cause this time the acknowledgment number in the server's reply packet is 1201, because there were again 100 bytes transmitted. The window size of the server is now reduced to 251.

The last message was sent from server to client. Here the sequence number is still 1 while the acknowledgment number is already 1201. The client replies with a ACK-packet containing a acknowledgment number increased to 101, because the previous packet was the first data packet it received since the Three-Way-Handshake.

,

```
No.    Time          Source              Destination         Protocol Length Info
41 7.691788     134.108.8.37        134.108.8.36        TCP     154    51444 -> 6777 [PSH, ACK] Seq=1
     Ack=1 Win=256 Len=100

Frame 41: 154 bytes on wire (1232 bits), 154 bytes captured (1232 bits) on interface 0
```

```
Ethernet II, Src: Dell\_88:97:76 (90:b1:1c:88:97:76), Dst: Dell\_87:b7:aa (90:b1:1c:87:b7:aa)
Internet Protocol Version 4, Src: 134.108.8.37, Dst: 134.108.8.36
Transmission Control Protocol, Src Port: 51444, Dst Port: 6777, Seq: 1, Ack: 1, Len: 100
Data (100 bytes)

No.     Time          Source              Destination         Protocol Length Info
46 7.892984     134.108.8.36        134.108.8.37        TCP     54     6777 -> 51444 [ACK] Seq=1 Ack
    =101 Win=256 Len=0

Frame 46: 54 bytes on wire (432 bits), 54 bytes captured (432 bits) on interface 0
Ethernet II, Src: Dell\_87:b7:aa (90:b1:1c:87:b7:aa), Dst: Dell\_88:97:76 (90:b1:1c:88:97:76)
Internet Protocol Version 4, Src: 134.108.8.36, Dst: 134.108.8.37
Transmission Control Protocol, Src Port: 6777, Dst Port: 51444, Seq: 1, Ack: 101, Len: 0

No.     Time          Source              Destination         Protocol Length Info
90 19.684399    134.108.8.37        134.108.8.36        TCP     1054   51444 -> 6777 [PSH, ACK] Seq
    =101 Ack=1 Win=256 Len=1000

Frame 90: 1054 bytes on wire (8432 bits), 1054 bytes captured (8432 bits) on interface 0
Ethernet II, Src: Dell\_88:97:76 (90:b1:1c:88:97:76), Dst: Dell\_87:b7:aa (90:b1:1c:87:b7:aa)
Internet Protocol Version 4, Src: 134.108.8.37, Dst: 134.108.8.36
Transmission Control Protocol, Src Port: 51444, Dst Port: 6777, Seq: 101, Ack: 1, Len: 1000
Data (1000 bytes)

No.     Time          Source              Destination         Protocol Length Info
92 19.889133    134.108.8.36        134.108.8.37        TCP     54     6777 -> 51444 [ACK] Seq=1 Ack
    =1101 Win=252 Len=0

Frame 92: 54 bytes on wire (432 bits), 54 bytes captured (432 bits) on interface 0
Ethernet II, Src: Dell\_87:b7:aa (90:b1:1c:87:b7:aa), Dst: Dell\_88:97:76 (90:b1:1c:88:97:76)
Internet Protocol Version 4, Src: 134.108.8.36, Dst: 134.108.8.37
Transmission Control Protocol, Src Port: 6777, Dst Port: 51444, Seq: 1, Ack: 1101, Len: 0

No.     Time          Source              Destination         Protocol Length Info
1875 165.393174   134.108.8.37        134.108.8.36        TCP     154    51444 -> 6777 [PSH, ACK] Seq
    =1101 Ack=1 Win=256 Len=100

Frame 1875: 154 bytes on wire (1232 bits), 154 bytes captured (1232 bits) on interface 0
Ethernet II, Src: Dell\_88:97:76 (90:b1:1c:88:97:76), Dst: Dell\_87:b7:aa (90:b1:1c:87:b7:aa)
Internet Protocol Version 4, Src: 134.108.8.37, Dst: 134.108.8.36
Transmission Control Protocol, Src Port: 51444, Dst Port: 6777, Seq: 1101, Ack: 1, Len: 100
Data (100 bytes)

No.     Time          Source              Destination         Protocol Length Info
1879 165.608164   134.108.8.36        134.108.8.37        TCP     54     6777 -> 51444 [ACK] Seq=1
    Ack=1201 Win=251 Len=0

Frame 1879: 54 bytes on wire (432 bits), 54 bytes captured (432 bits) on interface 0
Ethernet II, Src: Dell\_87:b7:aa (90:b1:1c:87:b7:aa), Dst: Dell\_88:97:76 (90:b1:1c:88:97:76)
Internet Protocol Version 4, Src: 134.108.8.36, Dst: 134.108.8.37
```

```
Transmission Control Protocol, Src Port: 6777, Dst Port: 51444, Seq: 1, Ack: 1201, Len: 0

No.    Time          Source              Destination         Protocol Length Info
2086 201.626400   134.108.8.36        134.108.8.37        TCP     154    6777 -> 51444 [PSH, ACK] Seq
    =1 Ack=1201 Win=251 Len=100

Frame 2086: 154 bytes on wire (1232 bits), 154 bytes captured (1232 bits) on interface 0
Ethernet II, Src: Dell\_87:b7:aa (90:b1:1c:87:b7:aa), Dst: Dell\_88:97:76 (90:b1:1c:88:97:76)
Internet Protocol Version 4, Src: 134.108.8.36, Dst: 134.108.8.37
Transmission Control Protocol, Src Port: 6777, Dst Port: 51444, Seq: 1, Ack: 1201, Len: 100
Data (100 bytes)

No.    Time          Source              Destination         Protocol Length Info
2088 201.832292   134.108.8.37        134.108.8.36        TCP     60     51444 -> 6777 [ACK] Seq=1201
     Ack=101 Win=256 Len=0

Frame 2088: 60 bytes on wire (480 bits), 60 bytes captured (480 bits) on interface 0
Ethernet II, Src: Dell\_88:97:76 (90:b1:1c:88:97:76), Dst: Dell\_87:b7:aa (90:b1:1c:87:b7:aa)
Internet Protocol Version 4, Src: 134.108.8.37, Dst: 134.108.8.36
Transmission Control Protocol, Src Port: 51444, Dst Port: 6777, Seq: 1201, Ack: 101, Len: 0
```

Listing 3.2: Wireshark trace for TCP messages

3.2.3 Connection release

To terminate an active connection, one of the two connected nodes sends a TCP-packet with the FIN-Flag enabled to the other node. In this case the client releases the connection first. The server answers with an ACK-packet where the acknowledgment number is increased to 102 because of the FIN-Flag. At this point, the connection is half-closed. The server can still send data to the client, but the client cannot send any data to the server, because it already released the connection. Now the server sends a FIN-enabled TCP packet to the client to terminated it's side of the connection. The client answers with an ACK-packet where the sequence number is 102 as before and the acknowledgment number is increased from 1201 to 1202 because of the server's FIN-flag in the previous packet. Now the connection is fully terminated. The following Wireshark-trace shows the captured packets:

,

```
No.    Time          Source              Destination         Protocol Length Info
3752 554.875797   134.108.8.36        134.108.8.37        TCP     54     6777 -> 51444 [FIN, ACK] Seq
    =101 Ack=1201 Win=251 Len=0

Frame 3752: 54 bytes on wire (432 bits), 54 bytes captured (432 bits) on interface 0
Ethernet II, Src: Dell\_87:b7:aa (90:b1:1c:87:b7:aa), Dst: Dell\_88:97:76 (90:b1:1c:88:97:76)
Internet Protocol Version 4, Src: 134.108.8.36, Dst: 134.108.8.37
```

```
Transmission Control Protocol, Src Port: 6777, Dst Port: 51444, Seq: 101, Ack: 1201, Len: 0

No.     Time          Source              Destination         Protocol Length Info
3755 554.876001   134.108.8.37        134.108.8.36        TCP     60     51444 -> 6777 [ACK] Seq=1201
     Ack=102 Win=256 Len=0

Frame 3755: 60 bytes on wire (480 bits), 60 bytes captured (480 bits) on interface 0
Ethernet II, Src: Dell\_88:97:76 (90:b1:1c:88:97:76), Dst: Dell\_87:b7:aa (90:b1:1c:87:b7:aa)
Internet Protocol Version 4, Src: 134.108.8.37, Dst: 134.108.8.36
Transmission Control Protocol, Src Port: 51444, Dst Port: 6777, Seq: 1201, Ack: 102, Len: 0

No.     Time          Source              Destination         Protocol Length Info
3869 569.922788   134.108.8.37        134.108.8.36        TCP     60     51444 -> 6777 [FIN, ACK] Seq
    =1201 Ack=102 Win=256 Len=0

Frame 3869: 60 bytes on wire (480 bits), 60 bytes captured (480 bits) on interface 0
Ethernet II, Src: Dell\_88:97:76 (90:b1:1c:88:97:76), Dst: Dell\_87:b7:aa (90:b1:1c:87:b7:aa)
Internet Protocol Version 4, Src: 134.108.8.37, Dst: 134.108.8.36
Transmission Control Protocol, Src Port: 51444, Dst Port: 6777, Seq: 1201, Ack: 102, Len: 0

No.     Time          Source              Destination         Protocol Length Info
3870 569.922807   134.108.8.36        134.108.8.37        TCP     54     6777 -> 51444 [ACK] Seq=102
    Ack=1202 Win=251 Len=0

Frame 3870: 54 bytes on wire (432 bits), 54 bytes captured (432 bits) on interface 0
Ethernet II, Src: Dell\_87:b7:aa (90:b1:1c:87:b7:aa), Dst: Dell\_88:97:76 (90:b1:1c:88:97:76)
Internet Protocol Version 4, Src: 134.108.8.36, Dst: 134.108.8.37
Transmission Control Protocol, Src Port: 6777, Dst Port: 51444, Seq: 102, Ack: 1202, Len: 0
```

Listing 3.3: Wireshark trace for Connection Release

3.3 TCP flow control

For this exercise another connection between server and client was established the same way as before. Now the task was to send a burst of 100 message from one host to another, while each message contained 1000 bytes of data. The intention behind this is to completely occupy the server's receive buffer with data and to observe what happens next. As seen in the Wireshark-trace, the client sends packet after packet to the server until the Window-size in the Servers corresponding ACK-packet is decreased to a value beneath 1000 bytes. When the client now tries to send the next packet, the server answers with a **TCP Zero Window** packet, where the window-size is decreased to 0, so the client cannot send another packet, no matter how small it is. This causes the client to stop sending the data packets. Instead it asks the server regulary if the receiver-buffer was cleared using a **TCP Zero Window Probe** packet. While the buffer is still occupied, the server answers with another TCP Zero Window packet. When the buffer

is cleared by the server, it sends a **Zero Window Update** packet with the new buffer size to the client. As soon as the client receives this packet, it answers with an ACK-packet and continues to send the data packets. The following Wireshark trace shows an example for each of the packets mentioned above.

,

```
No.    Time          Source              Destination         Protocol Length Info
711 94.044149    134.108.8.37        134.108.8.36        TCP      60     [TCP ZeroWindowProbe] 51484
    -> 6777 [ACK] Seq=73467 Ack=1 Win=256 Len=1

Frame 711: 60 bytes on wire (480 bits), 60 bytes captured (480 bits) on interface 0
Ethernet II, Src: Dell\_88:97:76 (90:b1:1c:88:97:76), Dst: Dell\_87:b7:aa (90:b1:1c:87:b7:aa)
Internet Protocol Version 4, Src: 134.108.8.37, Dst: 134.108.8.36
Transmission Control Protocol, Src Port: 51484, Dst Port: 6777, Seq: 73467, Ack: 1, Len: 1
Data (1 byte)

0000  53                                                S

No.    Time          Source              Destination         Protocol Length Info
714 94.255811    134.108.8.36        134.108.8.37        TCP      54     [TCP ZeroWindow] [TCP ACKed
    unseen segment] 6777 -> 51484 [ACK] Seq=1 Ack=73468 Win=0 Len=0

Frame 714: 54 bytes on wire (432 bits), 54 bytes captured (432 bits) on interface 0
Ethernet II, Src: Dell\_87:b7:aa (90:b1:1c:87:b7:aa), Dst: Dell\_88:97:76 (90:b1:1c:88:97:76)
Internet Protocol Version 4, Src: 134.108.8.36, Dst: 134.108.8.37
Transmission Control Protocol, Src Port: 6777, Dst Port: 51484, Seq: 1, Ack: 73468, Len: 0

No.    Time          Source              Destination         Protocol Length Info
1795 204.639823   134.108.8.36        134.108.8.37        TCP      54     [TCP Window Update] 6777 ->
    51484 [ACK] Seq=1 Ack=73469 Win=18 Len=0

Frame 1795: 54 bytes on wire (432 bits), 54 bytes captured (432 bits) on interface 0
Ethernet II, Src: Dell\_87:b7:aa (90:b1:1c:87:b7:aa), Dst: Dell\_88:97:76 (90:b1:1c:88:97:76)
Internet Protocol Version 4, Src: 134.108.8.36, Dst: 134.108.8.37
Transmission Control Protocol, Src Port: 6777, Dst Port: 51484, Seq: 1, Ack: 73469, Len: 0
```

Listing 3.4: Wireshark trace example for Zero Window packets

3.4 TCP transmission error recovery/abort

For this exercise TCP's error recovery and abort functionality was analyzed. In the first case, a transmission recovery happens after the server answers before the client's timeout. In the second case, the server does not answer before the timeout and the client aborts the transmission.

3.4.1 transmission error recovery

For this first part, a new connection between server and client was initialized the same way as in chapter 3.2.1. After that the server blocks any TCP-traffic for the port, *Traffic* is running on using a firewall. Now the clients sends a message to the server, but of course the related TCP-packet is blocked by the firewall. When the client does not receive an ACK-Packet for it's sent message, it sends a **TCP Retransmission** message. But there is still no answer, because the server still blocks any communication. Now the client keeps sending TCP Retransmission messages and for each packet the retransmission timeout (RTO) is increased. In this case the server is reconnected to the network again by turning off the firewall and answers with an acknowledge, before the client's RTO reaches a critical value. When the client receives this ACK-packet, the transmission was successfully recovered and the client can send it's message. The following Wireshark trace shows the client's original PSH-packet, the first and the last TCP Retransmission packet with unnecessary parts beeing collapsed and the server's ACK-packet.

,

```
No.    Time          Source              Destination         Protocol Length Info
115 20.815330    134.108.8.37        134.108.8.36        TCP     154    51693 -> 6777 [PSH, ACK] Seq
    =1 Ack=1 Win=65536 Len=100

Frame 115: 154 bytes on wire (1232 bits), 154 bytes captured (1232 bits) on interface 0
Ethernet II, Src: Dell\_88:97:76 (90:b1:1c:88:97:76), Dst: Dell\_87:b7:aa (90:b1:1c:87:b7:aa)
Internet Protocol Version 4, Src: 134.108.8.37, Dst: 134.108.8.36
Transmission Control Protocol, Src Port: 51693, Dst Port: 6777, Seq: 1, Ack: 1, Len: 100
Data (100 bytes)


No.    Time          Source              Destination         Protocol Length Info
117 21.123944    134.108.8.37        134.108.8.36        TCP     154    [TCP Retransmission] 51693 ->
     6777 [PSH, ACK] Seq=1 Ack=1 Win=65536 Len=100

Frame 117: 154 bytes on wire (1232 bits), 154 bytes captured (1232 bits) on interface 0
Ethernet II, Src: Dell\_88:97:76 (90:b1:1c:88:97:76), Dst: Dell\_87:b7:aa (90:b1:1c:87:b7:aa)
Internet Protocol Version 4, Src: 134.108.8.37, Dst: 134.108.8.36
Transmission Control Protocol, Src Port: 51693, Dst Port: 6777, Seq: 1, Ack: 1, Len: 100
    Source Port: 51693
    Destination Port: 6777
    [Stream index: 0]
    [TCP Segment Len: 100]
    Sequence number: 1  (relative sequence number)
    [Next sequence number: 101 (relative sequence number)]
    Acknowledgment number: 1 (relative ack number)
    0101 .... = Header Length: 20 bytes (5)
    Flags: 0x018 (PSH, ACK)
        000. .... .... = Reserved: Not set
        ...0 .... .... = Nonce: Not set
```

```
        .... 0... .... = Congestion Window Reduced (CWR): Not set
        .... .0.. .... = ECN-Echo: Not set
        .... ..0. .... = Urgent: Not set
        .... ...1 .... = Acknowledgment: Set
        .... .... 1... = Push: Set
        .... .... .0.. = Reset: Not set
        .... .... ..0. = Syn: Not set
        .... .... ...0 = Fin: Not set
        [TCP Flags: Â·Â·Â·Â·Â·Â·Â·APÂ·Â·Â·]
    Window size value: 256
    [Calculated window size: 65536]
    [Window size scaling factor: 256]
    Checksum: 0xabc8 [unverified]
    [Checksum Status: Unverified]
    Urgent pointer: 0
    [SEQ/ACK analysis]
    [iRTT: 0.000295000 seconds]
    [Bytes in flight: 100]
    [Bytes sent since last PSH flag: 100]
    [TCP Analysis Flags]
        [Expert Info (Note/Sequence): This frame is a (suspected) retransmission]
            [This frame is a (suspected) retransmission]
            [Severity level: Note]
            [Group: Sequence]
        [The RTO for this segment was: 0.308614000 seconds]
        [RTO based on delta from frame: 115]
    TCP payload (100 bytes)
    Retransmitted TCP segment data (100 bytes)

No.     Time          Source              Destination         Protocol Length Info
164 27.738317    134.108.8.37        134.108.8.36        TCP      154    [TCP Retransmission] 51693 ->
     6777 [PSH, ACK] Seq=1 Ack=1 Win=65536 Len=100

Frame 164: 154 bytes on wire (1232 bits), 154 bytes captured (1232 bits) on interface 0
Ethernet II, Src: Dell\_88:97:76 (90:b1:1c:88:97:76), Dst: Dell\_87:b7:aa (90:b1:1c:87:b7:aa)
Internet Protocol Version 4, Src: 134.108.8.37, Dst: 134.108.8.36
Transmission Control Protocol, Src Port: 51693, Dst Port: 6777, Seq: 1, Ack: 1, Len: 100
    Source Port: 51693
    Destination Port: 6777
    [Stream index: 0]
    [TCP Segment Len: 100]
    Sequence number: 1  (relative sequence number)
    [Next sequence number: 101 (relative sequence number)]
    Acknowledgment number: 1  (relative ack number)
    0101 .... = Header Length: 20 bytes (5)
    Flags: 0x018 (PSH, ACK)
        000. .... .... = Reserved: Not set
        ...0 .... .... = Nonce: Not set
        .... 0... .... = Congestion Window Reduced (CWR): Not set
        .... .0.. .... = ECN-Echo: Not set
```

```
        .... ..0. .... = Urgent: Not set
        .... ...1 .... = Acknowledgment: Set
        .... .... 1... = Push: Set
        .... .... .0.. = Reset: Not set
        .... .... ..0. = Syn: Not set
        .... .... ...0 = Fin: Not set
        [TCP Flags: Â·Â·Â·Â·Â·Â·Â·APÂ·Â·Â·]
    Window size value: 256
    [Calculated window size: 65536]
    [Window size scaling factor: 256]
    Checksum: 0xabc8 [unverified]
    [Checksum Status: Unverified]
    Urgent pointer: 0
    [SEQ/ACK analysis]
        [iRTT: 0.000295000 seconds]
        [Bytes in flight: 100]
        [Bytes sent since last PSH flag: 100]
        [TCP Analysis Flags]
            [Expert Info (Note/Sequence): This frame is a (suspected) retransmission]
                [This frame is a (suspected) retransmission]
                [Severity level: Note]
                [Group: Sequence]
            [The RTO for this segment was: 6.922987000 seconds]
            [RTO based on delta from frame: 115]
    TCP payload (100 bytes)
    Retransmitted TCP segment data (100 bytes)

No.    Time          Source              Destination         Protocol Length Info
    166 27.951282    134.108.8.36        134.108.8.37        TCP      54     6777 -> 51693 [ACK] Seq=1
         Ack=101 Win=65536 Len=0

Frame 166: 54 bytes on wire (432 bits), 54 bytes captured (432 bits) on interface 0
Ethernet II, Src: Dell\_87:b7:aa (90:b1:1c:87:b7:aa), Dst: Dell\_88:97:76 (90:b1:1c:88:97:76)
Internet Protocol Version 4, Src: 134.108.8.36, Dst: 134.108.8.37
Transmission Control Protocol, Src Port: 6777, Dst Port: 51693, Seq: 1, Ack: 101, Len: 0
    Source Port: 6777
    Destination Port: 51693
    [Stream index: 0]
    [TCP Segment Len: 0]
    Sequence number: 1  (relative sequence number)
    Acknowledgment number: 101 (relative ack number)
    0101 .... = Header Length: 20 bytes (5)
    Flags: 0x010 (ACK)
        000. .... .... = Reserved: Not set
        ...0 .... .... = Nonce: Not set
        .... 0... .... = Congestion Window Reduced (CWR): Not set
        .... .0.. .... = ECN-Echo: Not set
        .... ..0. .... = Urgent: Not set
        .... ...1 .... = Acknowledgment: Set
        .... .... 0... = Push: Not set
```

```
        .... .... .0.. = Reset: Not set
        .... .... ..0. = Syn: Not set
        .... .... ...0 = Fin: Not set
        [TCP Flags: Â·Â·Â·Â·Â·Â·Â·AÂ·Â·Â·Â·]
    Window size value: 256
    [Calculated window size: 65536]
    [Window size scaling factor: 256]
    Checksum: 0x1d3c [unverified]
    [Checksum Status: Unverified]
    Urgent pointer: 0
    [SEQ/ACK analysis]
        [This is an ACK to the segment in frame: 115]
        [The RTT to ACK the segment was: 7.135952000 seconds]
        [iRTT: 0.000295000 seconds]
```

Listing 3.5: Wireshark trace for TCP transmission error recovery

3.4.2 transmission error abort

In this second case, the server wasn't reconnected to the network before the client's TCP-packet RTO reached a critical value. To set up the same starting situation as in the exercise before, a burst of 10 messages was sent from client to server to reduce the RTO to a minimum. Now the server blocks all TCP traffic again using it's firewall. After that the client sends another message, but this time the server does not reconnect to the network. After seven TCP Retransmission messages, the RTO reaches a critical value and the client now sends a RST-packet to the server to close it's side of the connection. When the server tries to send another message to the client, the client does not reply with an acknowledge but with an reset (RST). These packets can be seen in the following Wireshark trace:

,

```
No.    Time          Source              Destination         Protocol Length Info
1182 150.782224   134.108.8.37        134.108.8.36        TCP     60     51685 -> 6777 [RST, ACK] Seq
    =101 Ack=1 Win=0 Len=0

Frame 1182: 60 bytes on wire (480 bits), 60 bytes captured (480 bits) on interface 0
Ethernet II, Src: Dell\_88:97:76 (90:b1:1c:88:97:76), Dst: Dell\_87:b7:aa (90:b1:1c:87:b7:aa)
Internet Protocol Version 4, Src: 134.108.8.37, Dst: 134.108.8.36
Transmission Control Protocol, Src Port: 51685, Dst Port: 6777, Seq: 101, Ack: 1, Len: 0

No.    Time          Source              Destination         Protocol Length Info
1971 264.235460   134.108.8.36        134.108.8.37        TCP     154    6777 -> 51685 [PSH, ACK] Seq
    =1 Ack=1 Win=65536 Len=100

Frame 1971: 154 bytes on wire (1232 bits), 154 bytes captured (1232 bits) on interface 0
Ethernet II, Src: Dell\_87:b7:aa (90:b1:1c:87:b7:aa), Dst: Dell\_88:97:76 (90:b1:1c:88:97:76)
```

```
Internet Protocol Version 4, Src: 134.108.8.36, Dst: 134.108.8.37
Transmission Control Protocol, Src Port: 6777, Dst Port: 51685, Seq: 1, Ack: 1, Len: 100
Data (100 bytes)

No.     Time          Source              Destination         Protocol Length Info
1974 264.235679   134.108.8.37        134.108.8.36        TCP     60     51685 -> 6777 [RST] Seq=1
    Win=0 Len=0

Frame 1974: 60 bytes on wire (480 bits), 60 bytes captured (480 bits) on interface 0
Ethernet II, Src: Dell\_88:97:76 (90:b1:1c:88:97:76), Dst: Dell\_87:b7:aa (90:b1:1c:87:b7:aa)
Internet Protocol Version 4, Src: 134.108.8.37, Dst: 134.108.8.36
Transmission Control Protocol, Src Port: 51685, Dst Port: 6777, Seq: 1, Len: 0
```

Listing 3.6: Wireshark trace for TCP transmission error abort

3.5 TCP protocol errors (synchronization errors)

In this exercise it was examined what TCP does when client and server are not synchronised correctly. In the first case, the client tries to connect to the server before the server's TCP socket has called *listen()*. In this case the client tries to connect to a non-existing server. When the client does not receive a [SYN, ACK]-packet from the server, it starts to send TCP Retransmission messages. When the server performs a listen before the RTO reaches a critical value, the rest of the Three-Way-Handshake is done normally. Otherwise the client aborts the procedure. The following Wireshark-trace shows the related packets for SYN and TCP Retransmission messages:

,

```
No.     Time          Source              Destination         Protocol Length Info
111 19.236136    134.108.8.37        134.108.8.36        TCP     66     51700 -> 6777 [SYN] Seq=0 Win
    =8192 Len=0 MSS=1460 WS=256 SACK\_PERM=1

Frame 111: 66 bytes on wire (528 bits), 66 bytes captured (528 bits) on interface 0
Ethernet II, Src: Dell\_88:97:76 (90:b1:1c:88:97:76), Dst: Dell\_87:b7:aa (90:b1:1c:87:b7:aa)
Internet Protocol Version 4, Src: 134.108.8.37, Dst: 134.108.8.36
Transmission Control Protocol, Src Port: 51700, Dst Port: 6777, Seq: 0, Len: 0

No.     Time          Source              Destination         Protocol Length Info
120 22.245072    134.108.8.37        134.108.8.36        TCP     66     [TCP Retransmission] 51700 ->
     6777 [SYN] Seq=0 Win=8192 Len=0 MSS=1460 WS=256 SACK\_PERM=1

Frame 120: 66 bytes on wire (528 bits), 66 bytes captured (528 bits) on interface 0
Ethernet II, Src: Dell\_88:97:76 (90:b1:1c:88:97:76), Dst: Dell\_87:b7:aa (90:b1:1c:87:b7:aa)
Internet Protocol Version 4, Src: 134.108.8.37, Dst: 134.108.8.36
Transmission Control Protocol, Src Port: 51700, Dst Port: 6777, Seq: 0, Len: 0
```

```
No.     Time          Source              Destination         Protocol Length Info
155 28.250924     134.108.8.37        134.108.8.36        TCP      62     [TCP Retransmission] 51700 ->
     6777 [SYN] Seq=0 Win=8192 Len=0 MSS=1460 SACK\_PERM=1

Frame 155: 62 bytes on wire (496 bits), 62 bytes captured (496 bits) on interface 0
Ethernet II, Src: Dell\_88:97:76 (90:b1:1c:88:97:76), Dst: Dell\_87:b7:aa (90:b1:1c:87:b7:aa)
Internet Protocol Version 4, Src: 134.108.8.37, Dst: 134.108.8.36
Transmission Control Protocol, Src Port: 51700, Dst Port: 6777, Seq: 0, Len: 0
```

Listing 3.7: Connect before listen

The same thing happens in the second case. When the server performs a *listen* before blocking all TCP traffic for the related port, it does not notice any attempts to establish a connection. The Wireshark Trace for this looks the same as in the first case. In both cases the client's user screen shows an error message as seen in figure 3.2:

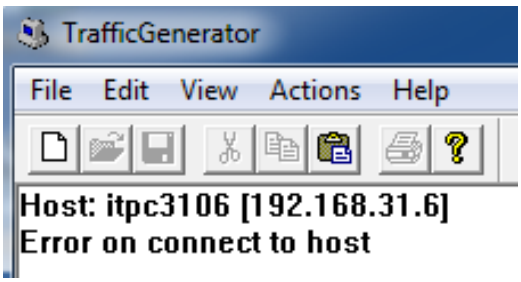

Figure 3.2: Connection failed!

4 IPv6/ICMPv6 analysis

<table>
<tr><td>bits</td><td>0-3</td><td>4-7</td><td>8-11</td><td>12-15</td><td>16-19</td><td>20-23</td><td>24-27</td><td>28-31</td></tr>
<tr><td>bytes</td><td colspan="2">1</td><td colspan="2">2</td><td colspan="2">3</td><td colspan="2">4</td></tr>
<tr><td>Offset 0</td><td>Version</td><td colspan="2">Traffic Class</td><td colspan="5">Flow Label</td></tr>
<tr><td>Offset 32</td><td colspan="4">Payload Length</td><td colspan="2">Next Header</td><td colspan="2">Hop Limit</td></tr>
<tr><td>Offset 64</td><td colspan="8" rowspan="4">Source Address</td></tr>
<tr><td>Offset 96</td></tr>
<tr><td>Offset 128</td></tr>
<tr><td>Offset 160</td></tr>
<tr><td>Offset 192</td><td colspan="8" rowspan="4">Destination Address</td></tr>
<tr><td>Offset 224</td></tr>
<tr><td>Offset 256</td></tr>
<tr><td>Offset 288</td></tr>
</table>

Table 4.1: Internet Protocol v6 Header

<table>
<tr><td>bits</td><td>0-7</td><td>8-15</td><td>16-23</td><td>24-31</td></tr>
<tr><td>bytes</td><td>1</td><td>2</td><td>3</td><td>4</td></tr>
<tr><td>Offset 0</td><td colspan="4" rowspan="4">Source Address</td></tr>
<tr><td>Offset 32</td></tr>
<tr><td>Offset 64</td></tr>
<tr><td>Offset 96</td></tr>
<tr><td>Offset 128</td><td colspan="4" rowspan="4">Destination Address</td></tr>
<tr><td>Offset 160</td></tr>
<tr><td>Offset 192</td></tr>
<tr><td>Offset 224</td></tr>
<tr><td>Offset 256</td><td colspan="4">ICMPv6 length</td></tr>
<tr><td>Offset 288</td><td colspan="3">Zeros</td><td>Next Header</td></tr>
</table>

Table 4.2: Internet Control Message Protocol v6 Header

4.1 Node configuration

4.1.1 IPv4 and IPv6 configuration

4.1.2 interfaces for IPv6

4.2 PING commands

4.2.1 a) Basic ICMPv6 PING command

4.2.2 b) ICMPv6 PING command with large data package

4.2.3 c) Rebooting PC

4.2.4 d) Enforcing Neighbor discovery

4.2.5 e) ICMPv6 PING command with destination in another subnet

4.2.6 f) PING to a remote tunnel end

5 Conclusion

Bibliography

[Bec04] Kent Beck. *Test-Driven development by Example*. Pearson, 2004. ISBN: 8131715957.

[WMV03] Laurie Williams, E. Michael Maximilien, and Mladen Vouk. "Test-Driven Development as a Defect-Reduction Practice". In: *14th IEEE International Symposium on Software Reliability Engineering ISSRE 2003*. Denver, Colorado: IEEE, 2003. URL: `http://ieeexplore.ieee.org/document/1251029/` (visited on 10/01/2016).