Experiment data-driven modeling of tokamak discharge in EAST

November 21, 2020

Chenguang Wan

1. Institute of Plasma Physics, Chinese Academy of Science (ASIPP)
2. University of Science and Technology of China (USTC)

Email: chenguang.wan@ipp.ac.cn

Thursday, Apr 22, 2020

Co-authors: Jiangang Li, Zhi Yu

Outline

- Background
- Method
- Results
- Conclusions
- Other Works

Outline

- Background
- Method
- Results
- Conclusions
- Other Works

Tokamak Dicharge modeling

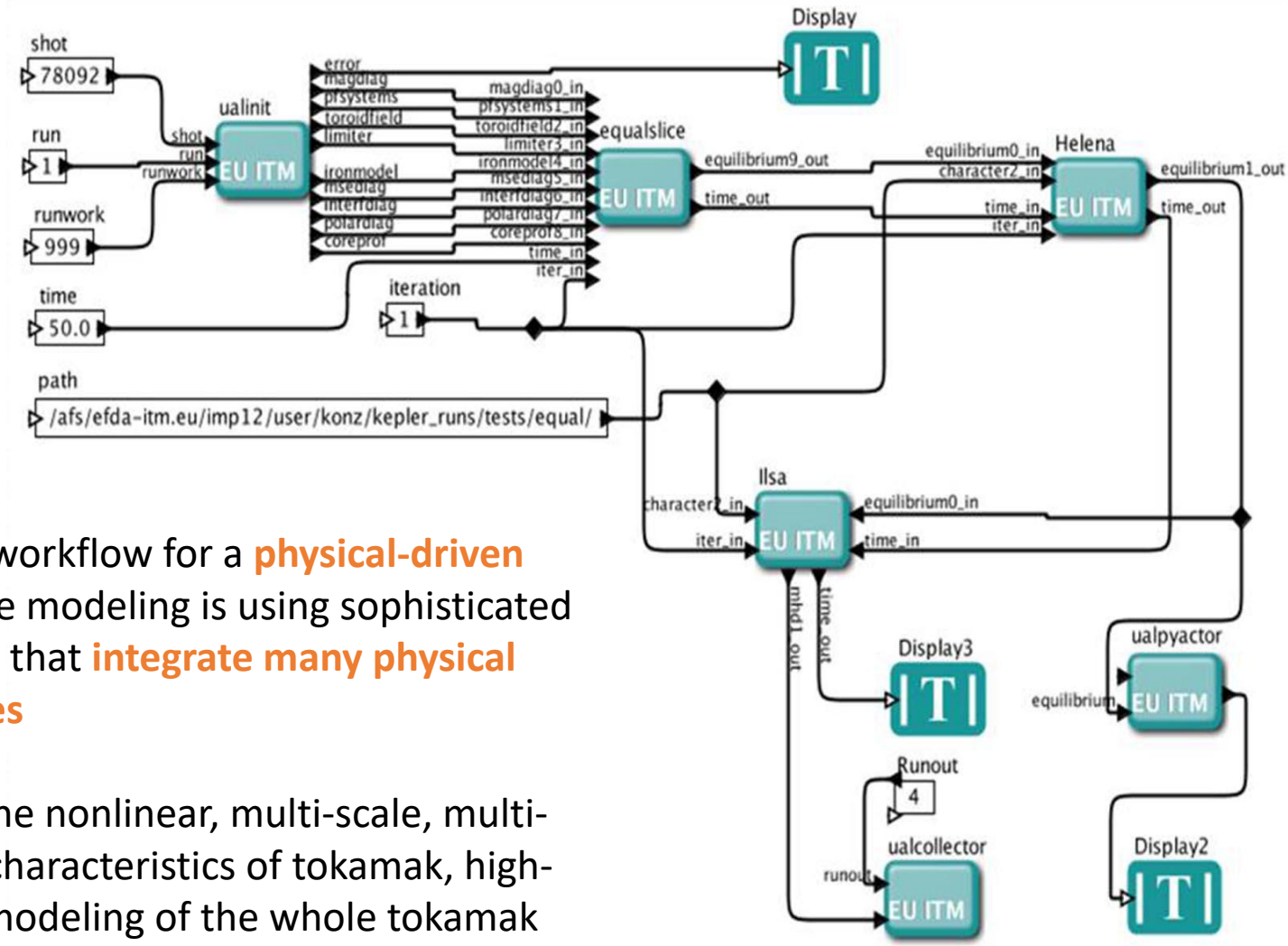

- Typical workflow for a **physical-driven** discharge modeling is using sophisticated modules that **integrate many physical processes**

- Due to the nonlinear, multi-scale, multi-physics characteristics of tokamak, high-fidelity modeling of the whole tokamak discharge process is still a **great scientific challenge**

Wrokflow of integrate modeling by G.L. Falchetto et al 2014 Nucl. Fusion 54 043018

Outline

- Background
- Method
- Results
- Conclusions
- Other Works

Motivation

Fusion community

1. Discharge modeling could **advance** and **optimize** the experimental **planning** and **validation**.
2. The classical method on modeling tokamak discharge process mostly adopts "integrated modeling" method[5,6]
3. Most people‘s machine learning research focuses on disruption prediction[1,2,3,4]
4. Most frameworks can only give simple classification or probability[1,3,4]

Our work

1. Using **data-driven** modeling methods instead of **physical-driven** modeling methods in tokamak **discharge modeling**.
2. Given the **accuracy values** of discharge **curve** in whole discharge process instead of just a classification or probability

1. *Predicting disruptive instabilities in controlled fusion plasma through deep learning*
2. Exploratory machine learning studies for disruption prediction using large databases on DIII-D
3. Machine learning for disruption warnings on Calculator C-Mod, DIII-D, and East Advanced disruption predictor based on the locked mode signal: Application to JET
4. Disruption Predictor based on 1.5-D CNN in HL-2A
5. Full tokamak discharge simulation of ITER by combining DINA-CH and CRONOS
6. The European Integrated Tokamak Modelling (ITM) effort: Achievements and first physics results

Tokamak as a black box: Data-driven modeling

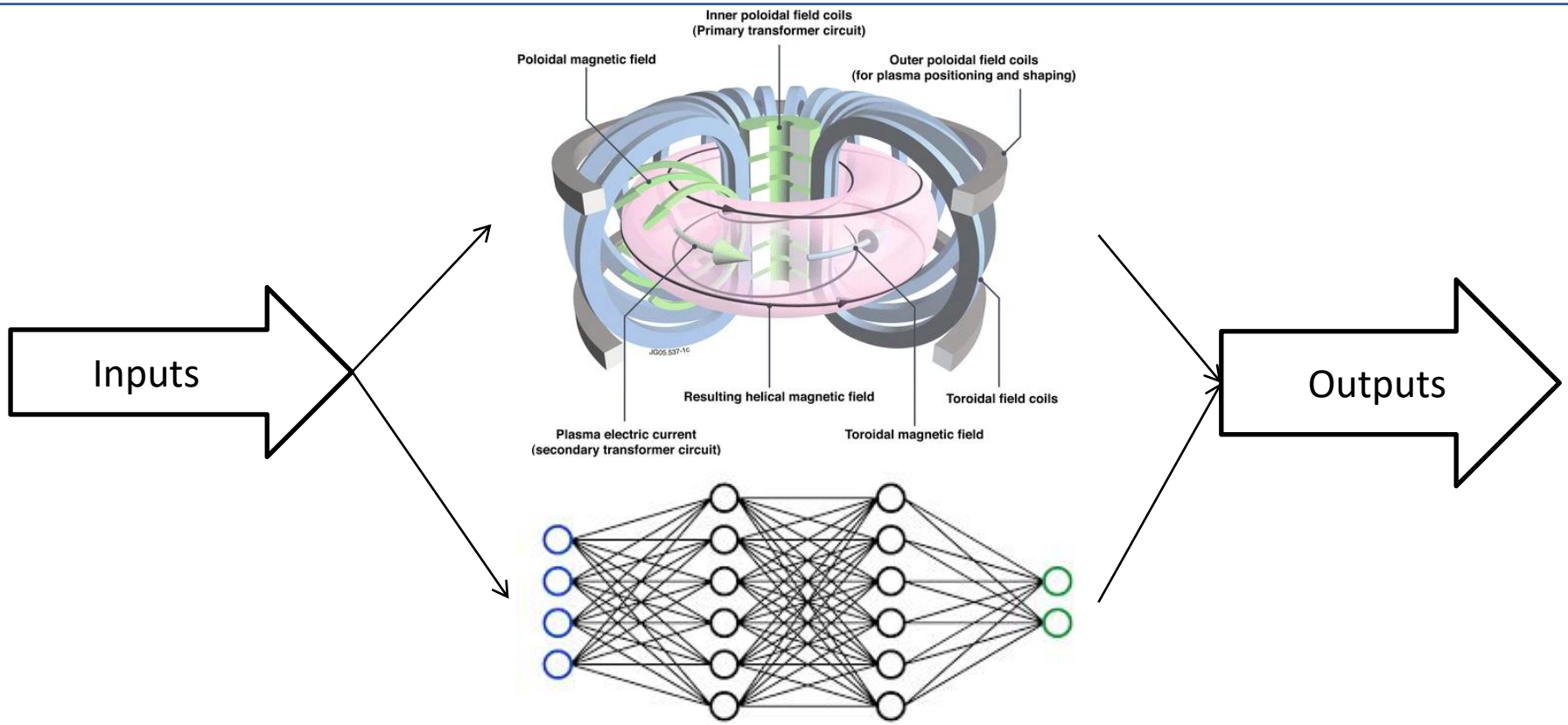

- Regarding the Tokamak as a **black box**, **Replacing** the black box with a Neural Network. Just like Duck Typing “If it walks like a duck, swims like a duck, and quacks like a duck, then it probably is a duck”.

Signal Selection

- Divided the tokamak data into three categories: actuator signals (NBI, ICRH, etc), diagnostic signals (W_{mhd}, n_e, etc.), and configuration parameters (position of the poloidal magnetic field (PF) coils, etc.)

Table 1. Input and output signals of model

Signals	Physics meanings	Unit	Number of Channels
Output Signals			3
n_e	Electron density	$10^{19}m^{-3}$	1
V_{loop}	Loop voltage	V	1
W_{mhd}	Plasma stored energy	J	1
Input Signals			65
I_p	Plasma current	A	2
PF	Current of Poloidal field (PF) coils	A	14
B_{t0}	Toroidal magenetic field	T	1
LHW	Porwer of Lower Hybrid Wave Current Drive and Heating System	kW	4
NBI	Neutral Beam Injection System	Raw signal	8
ICRH	Ion Cyclotron Resonance Heating System	Raw signal	16
ECRH/ECCD	Electron Cyclotron Resonance Heating/Current Drive System	Raw signal	4
GPS	Gas Puffing System	Raw signal	12
SMBI	Supersonic Molecular Beam Injection	Raw signal	3
PIS	Pellet Injection System	Raw signal	1

Framework

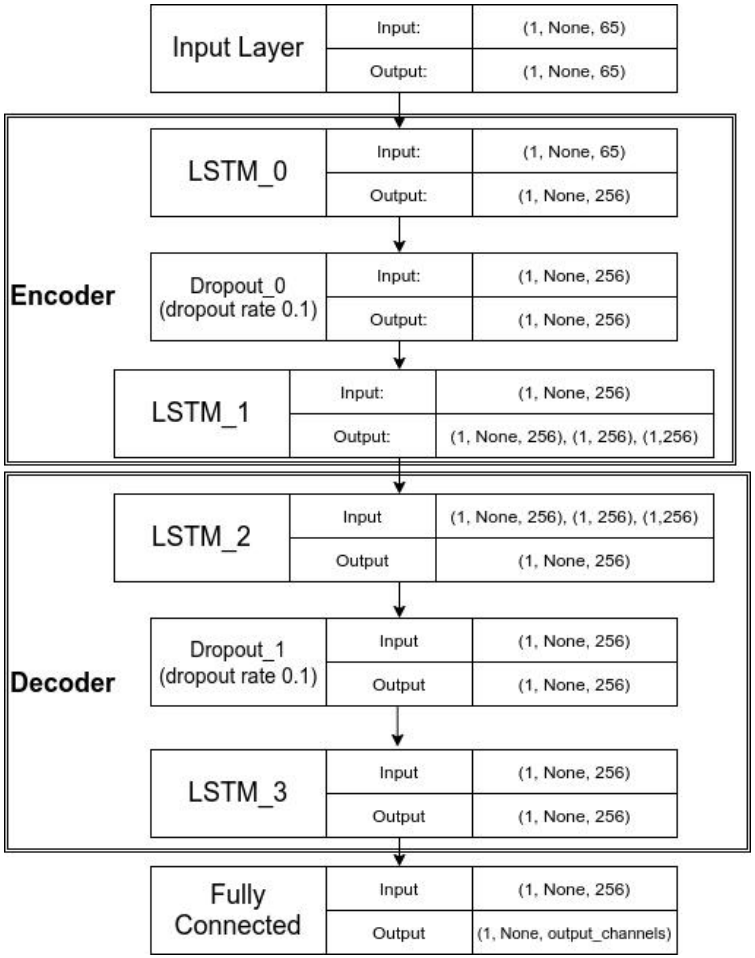

Fig 1. Architecture of our model

- Discharge modeling is similar to the **natural language process** (NLP).
  - NLP converts a natural language sequence into another natural language sequence.
  - The discharge modeling is essentially a process of mapping actuator(input) signals to diagnostic (output) signals.
  - The actuator signals and diagnostic signals are all temporal sequence data.
  - Encoder-decoder model is an advanced technique in the NLP field
- The framework is based on the encoder-decoder model.
  - The final hidden state of the encoder is used to **initialize** the hidden state of the decoder.

Workfolw

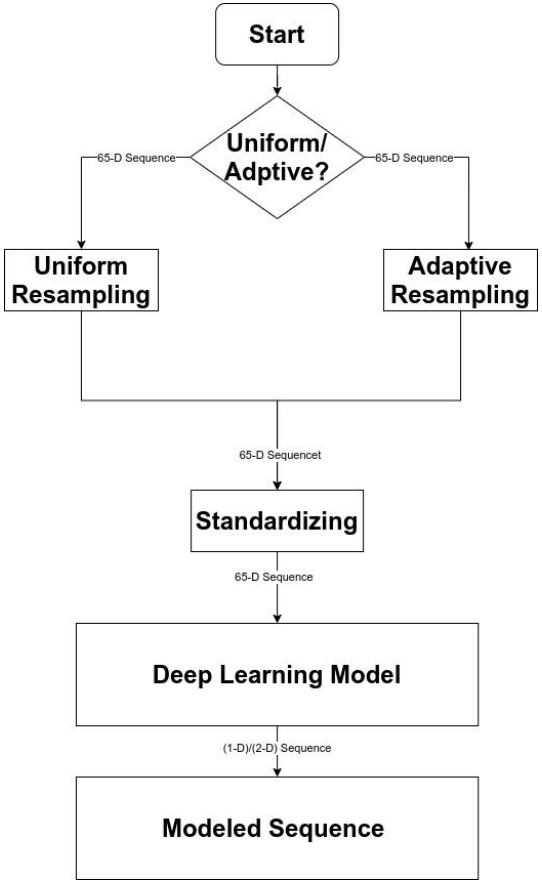

Fig 2. Workflow of our work

- W_{mhd} , n_e was used **different** resampling rate with V_{loop}

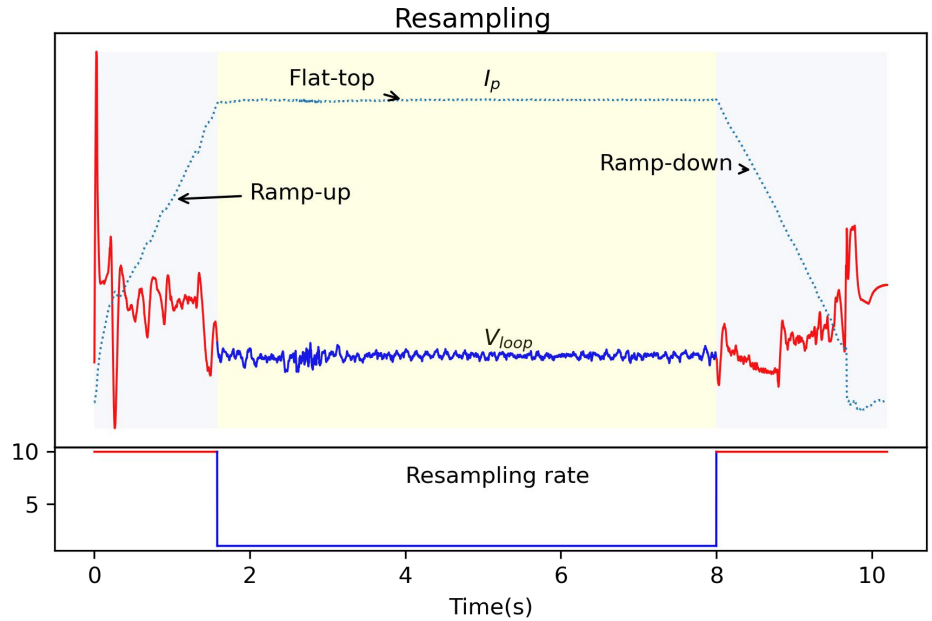

$$R_c^{v_{loop}} = \begin{cases} 1kHz, & \text{flat-top}, \\ 10kHz, & \text{ramp-up or ramp-down} \end{cases}$$

$$R_c^{W_{mhd}/n_e} = 1kHz, \quad \text{full process}$$

Outline

- Background
- Method
- Results
- Conclusions
- Other Works

Good agreement

- Comparison of modeling result and EAST experiment data,

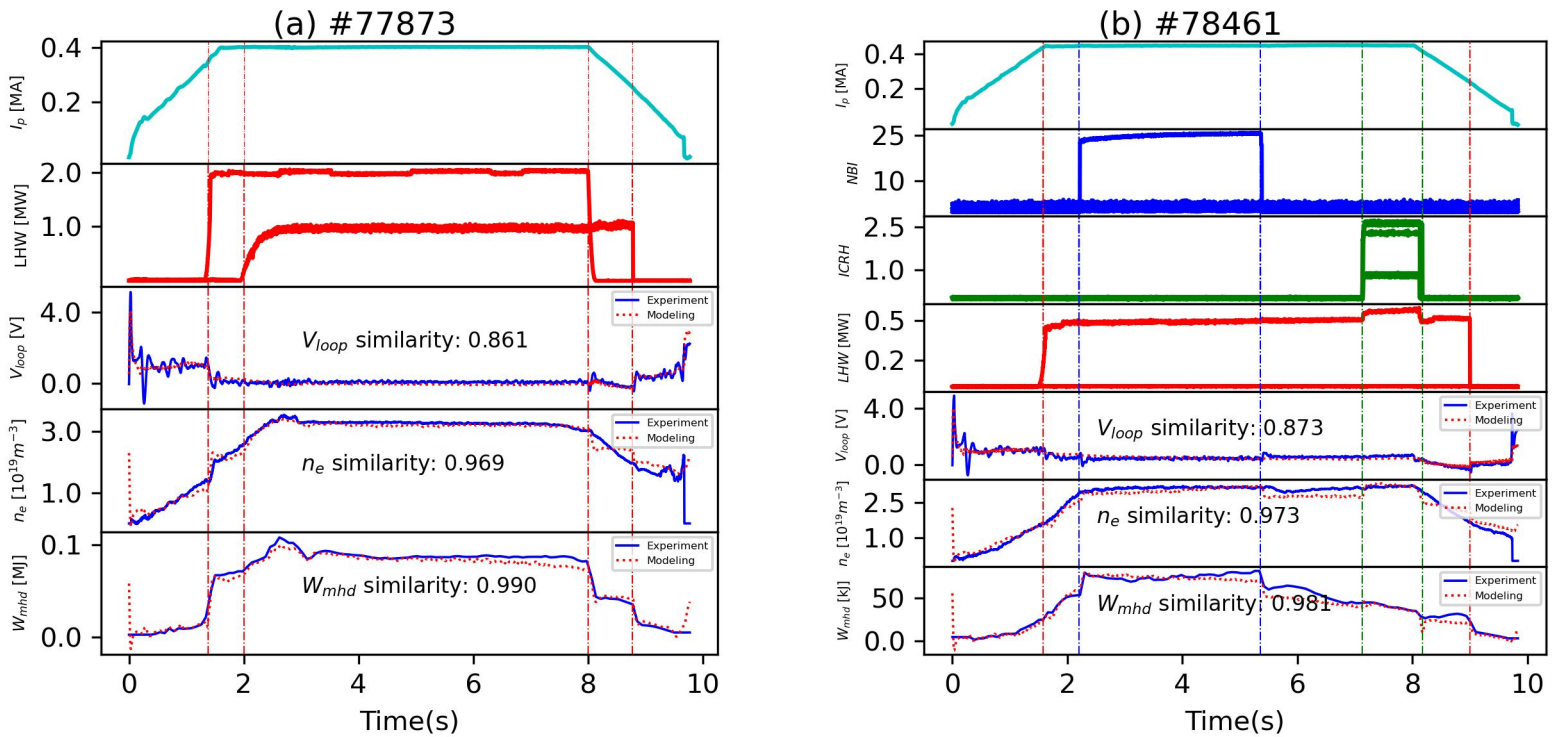

Fig 4. Two typical discharge modeling by our model.

- The comparison shows that they are in **good agreement** in most regions of discharge, from ramp-up to ramp-down. The slope of the ramp-up and ramp-down, the amplitude of the flat-top are accurately reproduced by the model.

Overall effect of modeling

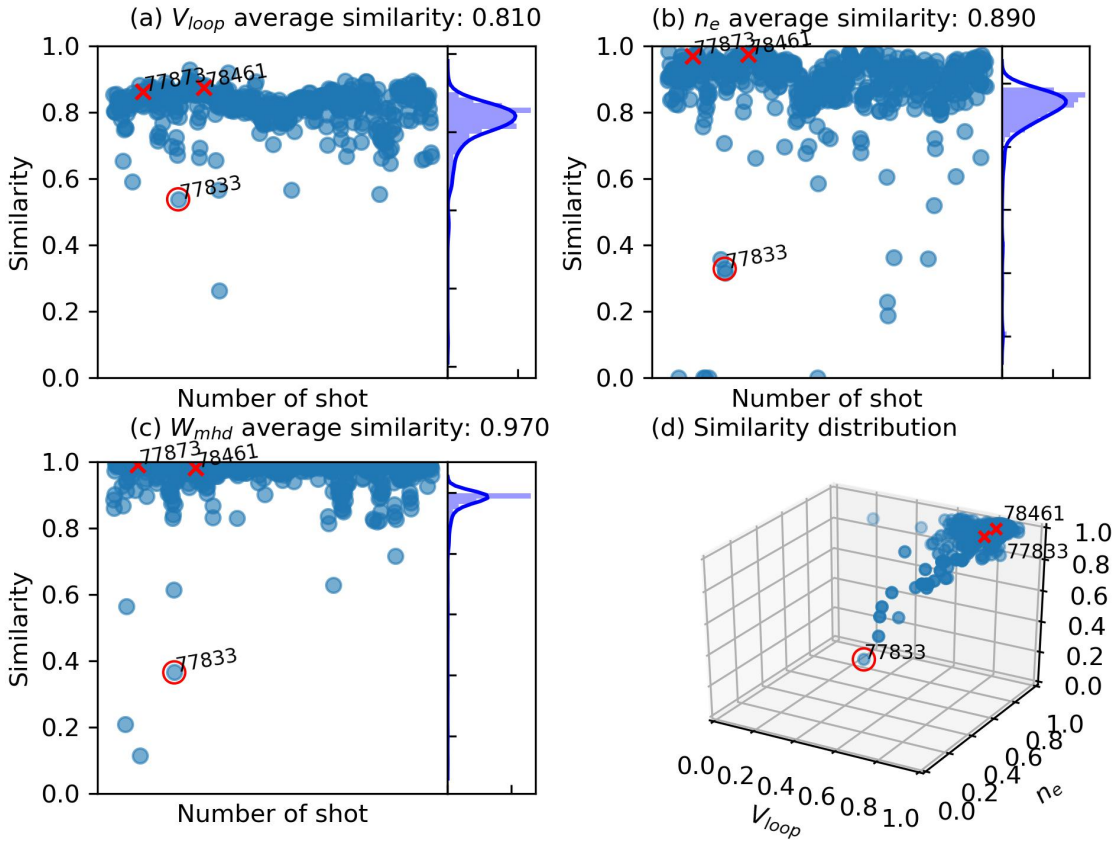

Fig 3. Similarity distribution of our model in the test set

- The similarity is defined as:

$$S(\boldsymbol{x},\boldsymbol{y}) \equiv \max\left(\frac{\Sigma(\boldsymbol{x}-\bar{\boldsymbol{x}})(\boldsymbol{y}-\bar{\boldsymbol{y}})}{\sqrt{\Sigma(\boldsymbol{x}-\bar{\boldsymbol{x}})^2\Sigma(\boldsymbol{y}-\bar{\boldsymbol{y}})^2}},0\right),$$

- In the joint distribution figure of the three parameters, most shots are concentrated in a **limited range**, which reflects the consistency of the model on three target signals.
- Those points far away from the center area indicate that the experiment is running in **abnormal** mode.

Abnoraml modeling result

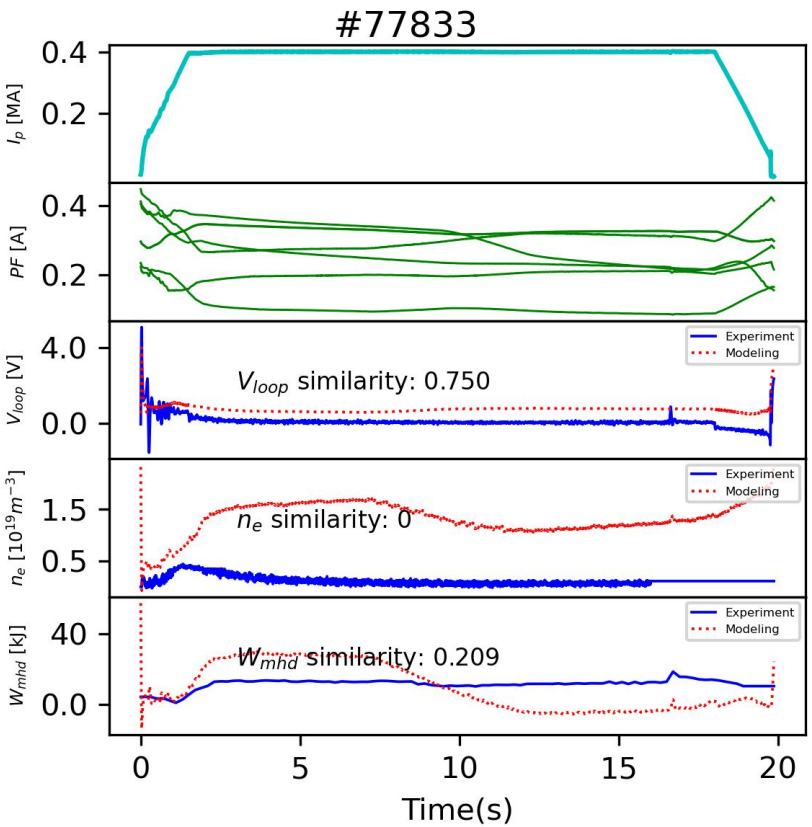

Fig 5. A Typical abnormal shot modeling

- Abnormal results are usually caused by **abnormal** discharge environment.
- shot #77833 deviation caused by abnormal equipment conditions. The shot #77833 is used for the cleaning device.
- If a new discharge mode appears, it may also be abnormal (not seen in this work)[1]

1. LeCun, Yann, Yoshua Bengio, and Geoffrey Hinton. "Deep learning." nature 521.7553 (2015): 436-444.

Outline

- Background
- Method
- Results
- Conclusions
- Other Works

Conclusions

- Providing reference in the experimental **proposal stage**.
  - The store energy W_{mhd}, electron density n_e, and loop voltage V_{loop} are predicted in the proposal stage.
  - More complete parameter modeling in the next step

- Providing **accuracy values of whole discharge curve** compared to other models.
  - Modeling the accuracy values of full curve for store energy W_{mhd}, electron density n_e, and loop voltage V_{loop} instead of just a classification or probability.

- Limitations
  - Temporarily unable to predict a discharge curve in real time.
  - Temporarily have not cross-tokamak validation.
  - Temporarily unable to achieve dimensionless.

- Open problem
  - How to automatically adjust the sensitivity of different signals in the machine learning model.

Ref.

Chenguang Wan *et al* 2021 *Nucl. Fusion*

Outline

- Background
- Method
- Results
- Conclusions
- Other Works

Bidirectional LSTM for tokamak discharge modeling

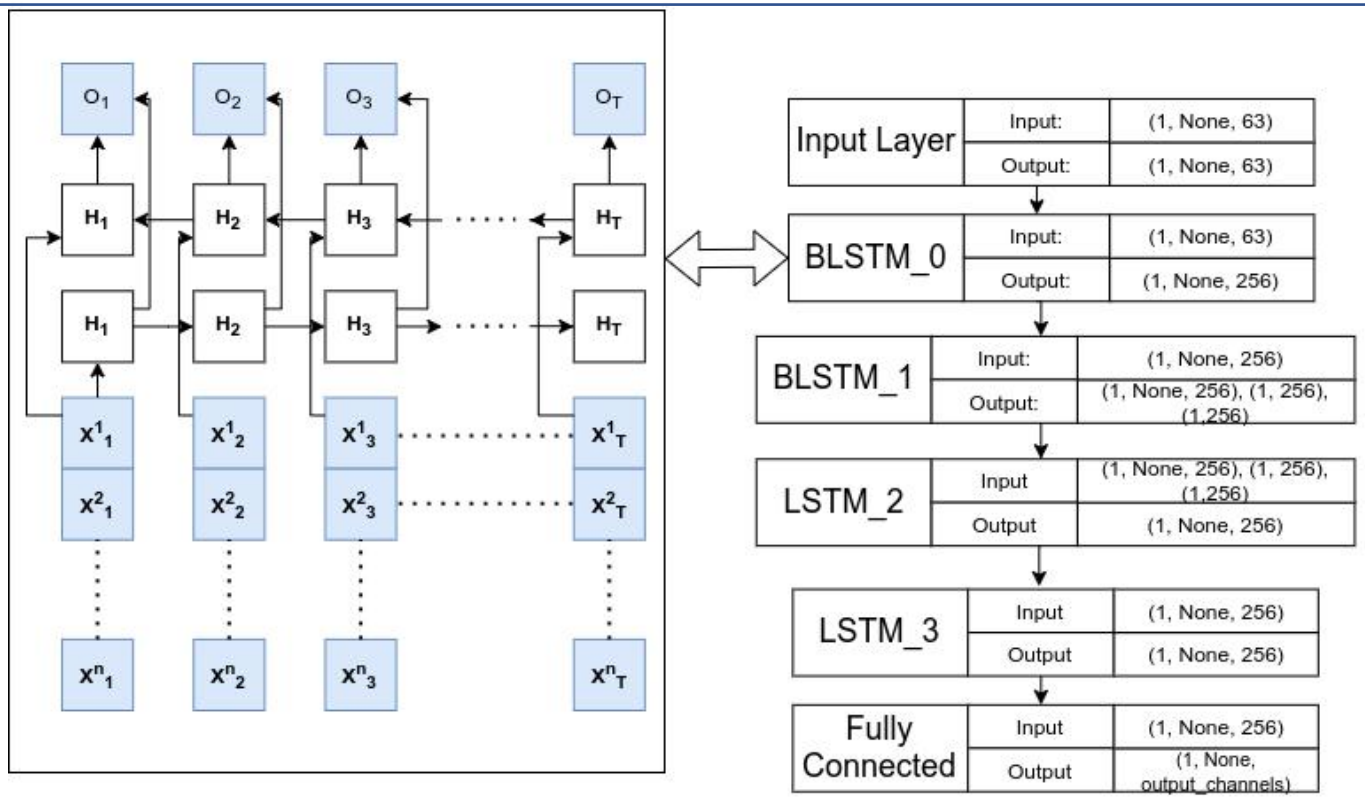

Fig 6. Bidirectional framework for discharge modeling

- Motivation
  - **Offline** discharge modeling **contextual information** is available and equal vital with past information during the experiment proposal stage
- Main idea
  - **Bidirectional LSTM**

Ref. C. Wan NF (submitted)

Thank You!