# Experiment data-driven modeling of tokamak discharge in EAST

Chenguang Wan

1. Institute of Plasma Physics, Chinese Academy of Science (ASIPP)
2. University of Science and Technology of China (USTC)

Email: chenguang.wan@ipp.ac.cn

Sunday, May 9, 2021

Co-authors: Jiangang Li, Zhi Yu

# Outline

- Background
- Method
- Results
- Conclusions
- Other Works

# Outline

- Background
- Method
- Results
- Conclusions
- Other Works

# Machine Learning

Classic machine learning (ML) methods work well because of **human-designed** representations and input features

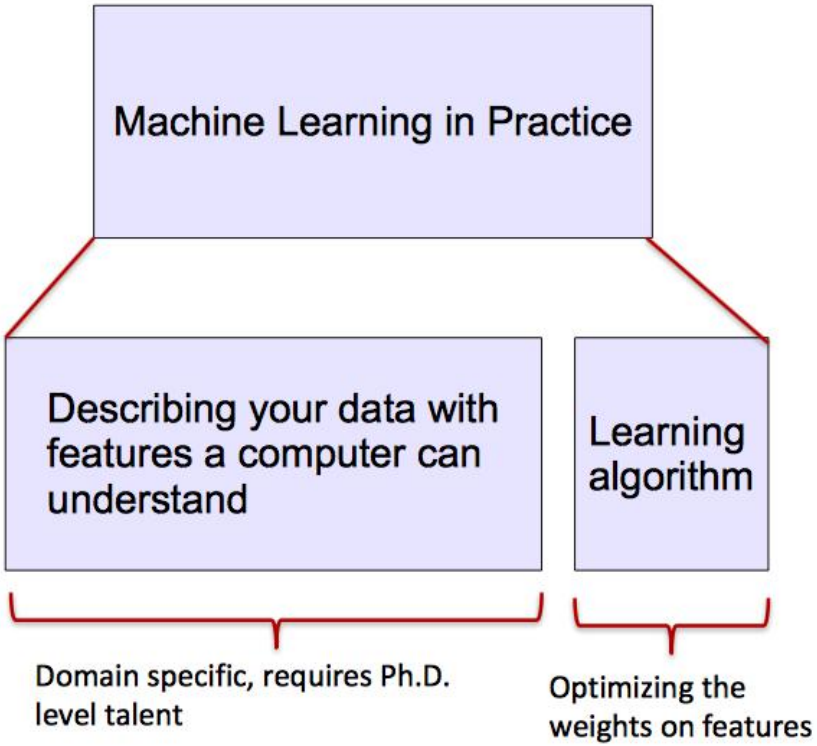


- Fusion community
  - Advance Predictor of Disruptions (APODIS)[1] reached accuracy of ~80% for disruption predicting. Before the raising of deep learning methods
  - Disruption prediction using random forests (DPRF)[2] on cross-tokamak.
  - Support vector machines[3,4]
  - Decision trees[5,6]

*1. Results of the JET real-time disruption predictor in the ITER-like wall campaigns*
*2. A real-time machine learning-based disruption predictor in DIII-D*
*3. Support vector machines for disruption prediction and novelty detection at JET*
*4. An advanced disruption predictor for JET tested in a simulated real-time environment*
*5. Prototype of an adaptive disruption predictor for JET based on fuzzy logic and regression trees*
*6. Unbiased and non-supervised learning methods for disruption prediction at JET*

# Deep Learning

Deep learning algorithms attempt to learn (multiple levels of) representation by using a **hierarchy of multiple layers**

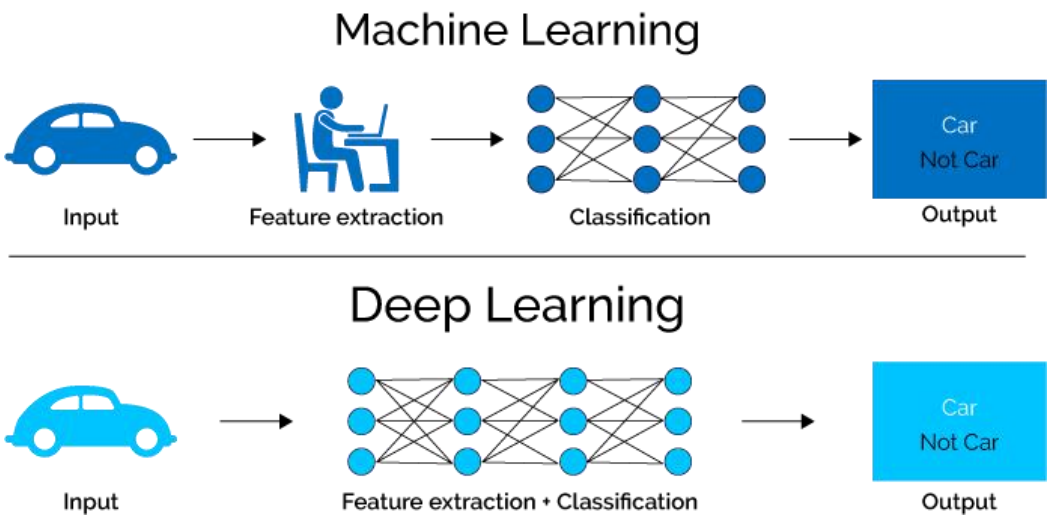


- Fusion community
  - Fusion Recursive Neural Network (FRNN)[1]
  - 1.5D CNN+LSTM [2]
  - Other works[3,4,5]


*1. Predicting disruptive instabilities in controlled fusion plasma through deep learning*
*2. Disruption Predictor based on 1.5-D CNN in HL-2A*
*3. On-line prediction and mitigation of disruptions in ASDEX Upgrade*
*4. Disruption forecasting at JET using neuralnetworks.*
*5. Neural-net predictor for beta limit disruptions in JT-60U*
*6. A cross-tokamak neural network disruption predictor for the JET and ASDEX Upgrade tokamaks*

# Tokamak Dicharge modeling

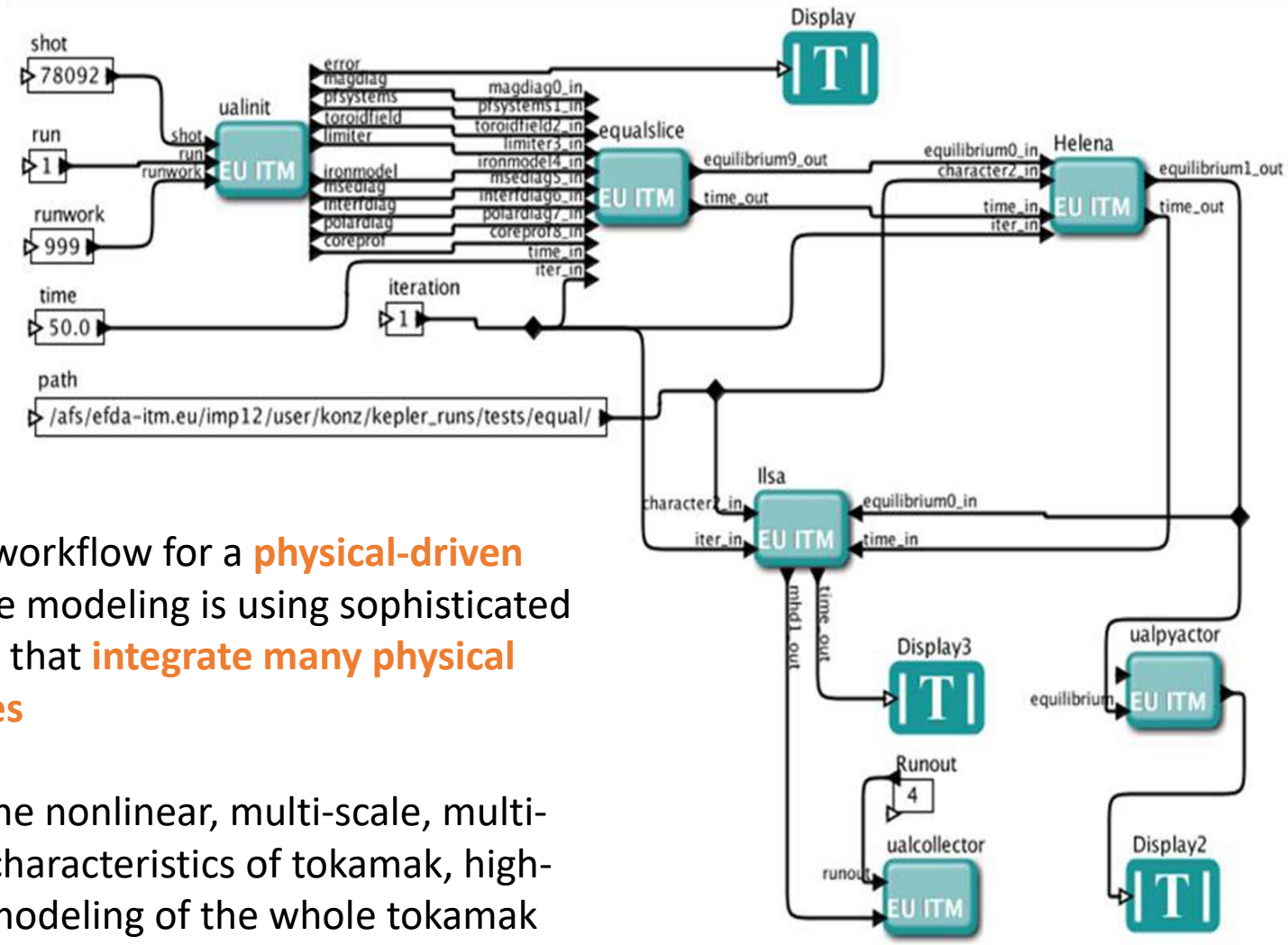


- Typical workflow for a **physical-driven** discharge modeling is using sophisticated modules that **integrate many physical processes**

- Due to the nonlinear, multi-scale, multi-physics characteristics of tokamak, high-fidelity modeling of the whole tokamak discharge process is still a **great scientific challenge**

*Wrokflow of integrate modeling by G.L. Falchetto et al 2014 Nucl. Fusion 54 043018*

# Outline

- Background
- Method
- Results
- Conclusions
- Other Works

# Motivation

Fusion community

1. Discharge modeling could **advance** and **optimize** the experimental **planning** and **validation**.
2. The classical method on modeling tokamak discharge process mostly adopts "integrated modeling" method[5,6]
3. Most people‘s machine learning research focuses on disruption prediction[1,2,3,4]
4. Most frameworks can only give simple classification or probability[1,3,4]

Our work

1. Using **data-driven** modeling methods instead of **physical-driven** modeling methods in tokamak **discharge modeling**.
2. Given the **accuracy values** of discharge **curve** in whole discharge process instead of just a classification or probability


1. *Predicting disruptive instabilities in controlled fusion plasma through deep learning*
2. Exploratory machine learning studies for disruption prediction using large databases on DIII-D
3. Machine learning for disruption warnings on Calculator C-Mod, DIII-D, and East Advanced disruption predictor based on the locked mode signal: Application to JET
4. Disruption Predictor based on 1.5-D CNN in HL-2A
5. Full tokamak discharge simulation of ITER by combining DINA-CH and CRONOS
6. The European Integrated Tokamak Modelling (ITM) effort: Achievements and first physics results

# Tokamak as a black box: Data-driven modeling

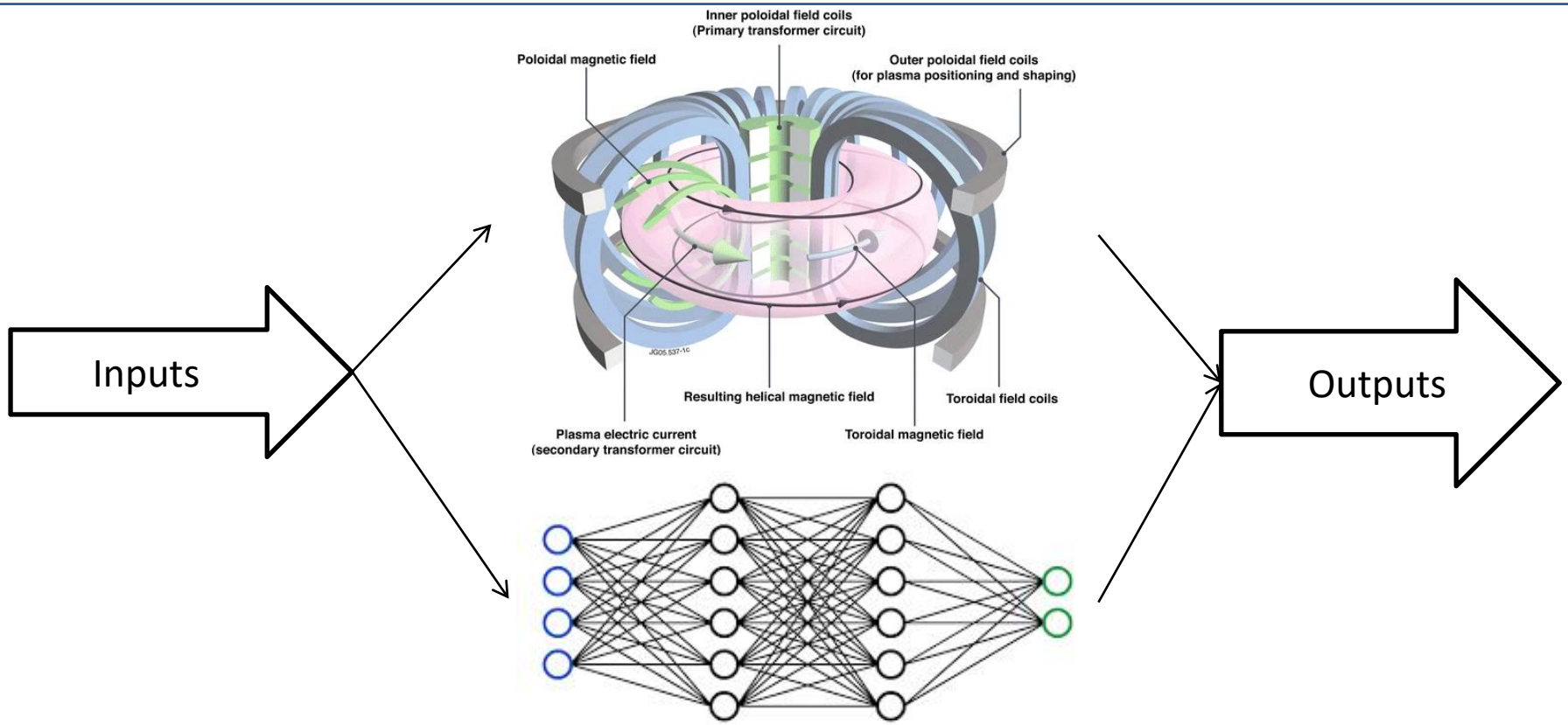


- Regarding the Tokamak as a **black box**, **Replacing** the black box with a Neural Network. Just like Duck Typing “If it walks like a duck, swims like a duck, and quacks like a duck, then it probably is a duck”.

# Signal Selection

- Divided the tokamak data into three categories: actuator signals ( NBI, ICRH, etc), diagnostic signals ($W_{mhd}, n_e$, etc.), and configuration parameters (position of the poloidal magnetic field (PF) coils, etc.)

Table 1. Input and output signals of model

| Signals | Physics meanings | Unit | Number of Channels |
|---|---|---|---|
| Output Signals | | | 3 |
| $n_e$ | Electron density | $10^{19}m^{-3}$ | 1 |
| $V_{loop}$ | Loop voltage | $V$ | 1 |
| $W_{mhd}$ | Plasma stored energy | $J$ | 1 |
| Input Signals | | | 65 |
| $I_p$ | Plasma current | $A$ | 2 |
| PF | Current of Poloidal field (PF) coils | $A$ | 14 |
| $B_{t0}$ | Toroidal magenetic field | $T$ | 1 |
| LHW | Porwer of Lower Hybrid Wave Current Drive and Heating System | $kW$ | 4 |
| NBI | Neutral Beam Injection System | Raw signal | 8 |
| ICRH | Ion Cyclotron Resonance Heating System | Raw signal | 16 |
| ECRH/ECCD | Electron Cyclotron Resonance Heating/Current Drive System | Raw signal | 4 |
| GPS | Gas Puffing System | Raw signal | 12 |
| SMBI | Supersonic Molecular Beam Injection | Raw signal | 3 |
| PIS | Pellet Injection System | Raw signal | 1 |

# Framework

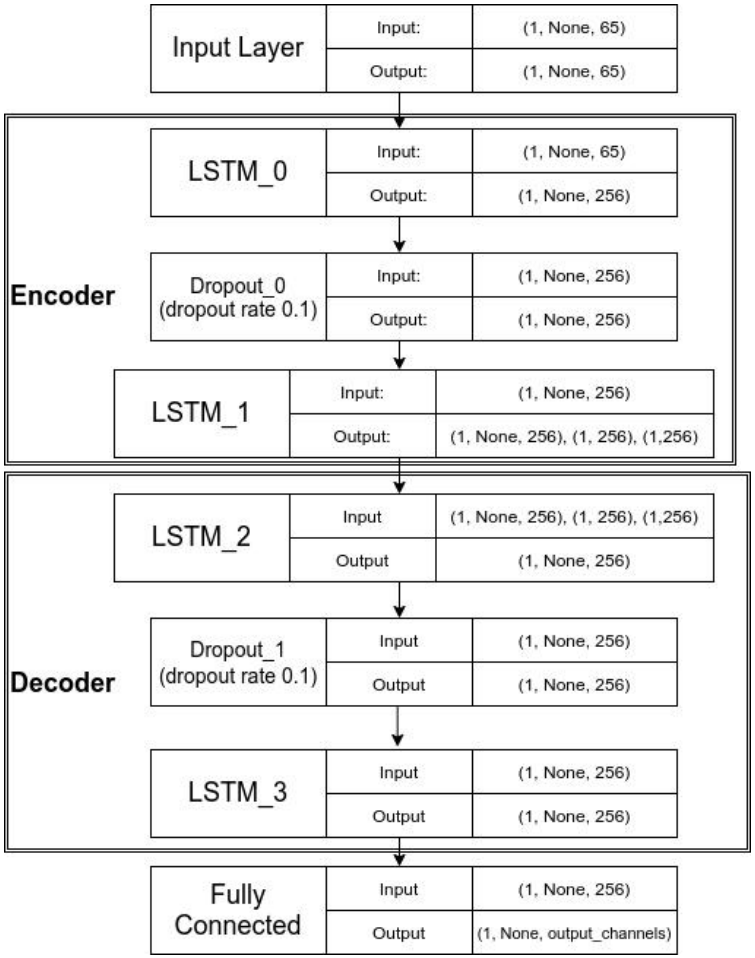


Fig 1. Architecture of our model

- Discharge modeling is similar to the **natural language process** (NLP).
  - NLP converts a natural language sequence into another natural language sequence.
  - The discharge modeling is essentially a process of mapping actuator(input) signals to diagnostic (output) signals.
  - The actuator signals and diagnostic signals are all temporal sequence data.
  - Encoder-decoder model is an advanced technique in the NLP field
- The framework is based on the encoder-decoder model.
  - The final hidden state of the encoder is used to **initialize** the hidden state of the decoder.

# Workfolw

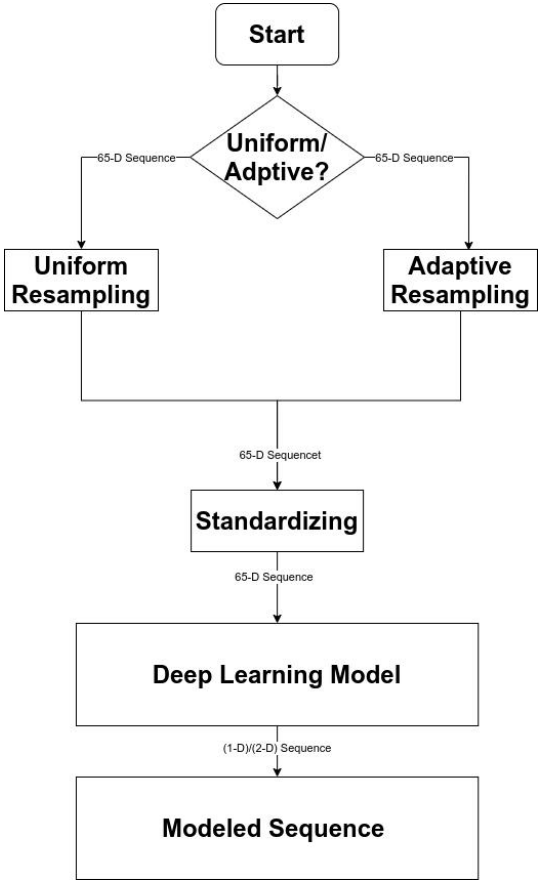


Fig 2. Workflow of our work

- $W_{mhd}$ , $n_e$ was used **different** resampling rate with $V_{loop}$

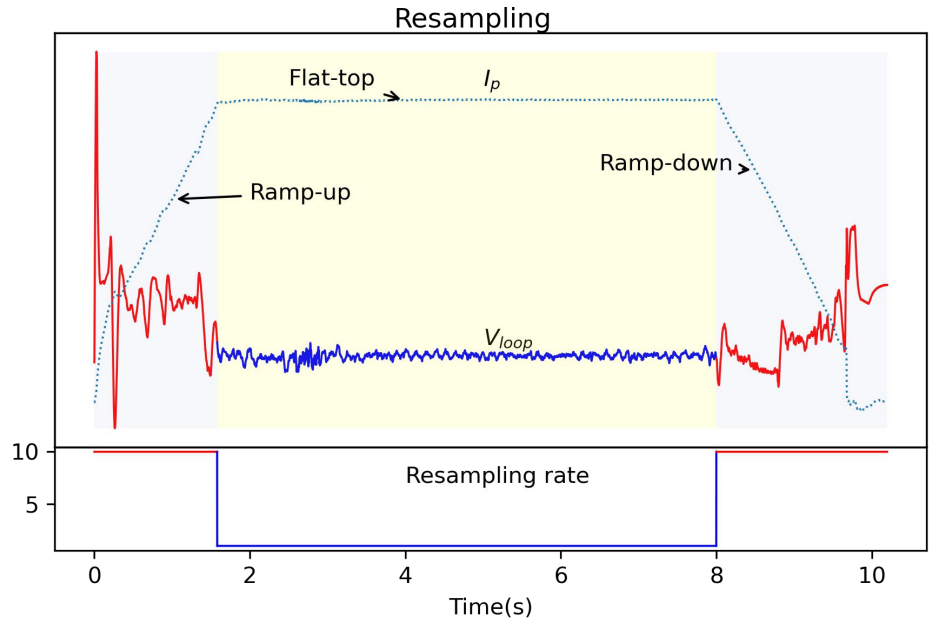


$$R_c^{v_{loop}} = \begin{cases} 1kHz, & \text{flat-top}, \\ 10kHz, & \text{ramp-up or ramp-down} \end{cases}$$

$$R_c^{W_{mhd}/n_e} = 1kHz, \quad \text{full process}$$

# Outline

- Background
- Method
- Results
- Conclusions
- Other Works

# Good agreement

- Comparison of modeling result and EAST experiment data,

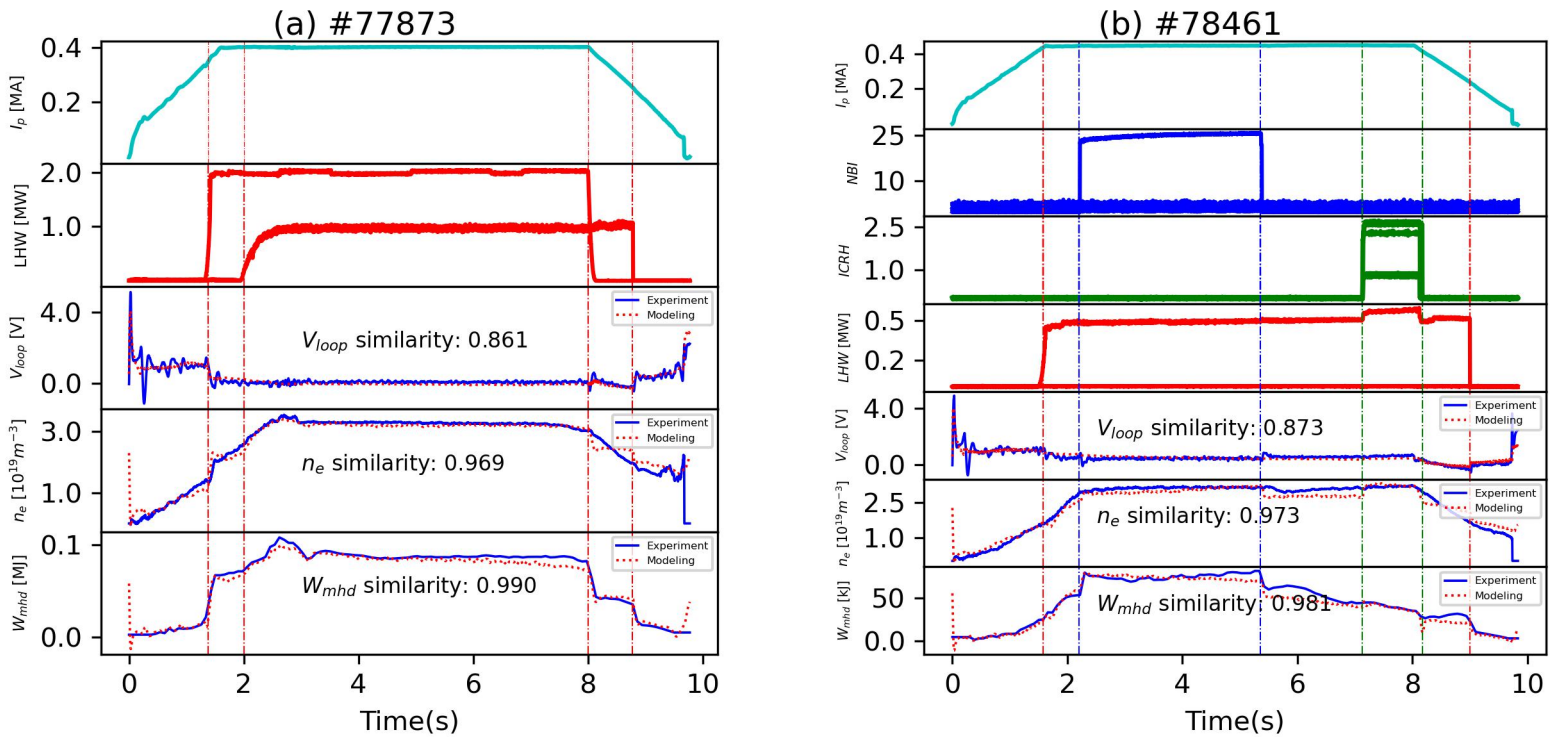


Fig 4. Two typical discharge modeling by our model.

- The comparison shows that they are in **good agreement** in most regions of discharge, from ramp-up to ramp-down. The slope of the ramp-up and ramp-down, the amplitude of the flat-top are accurately reproduced by the model.

# Overall effect of modeling

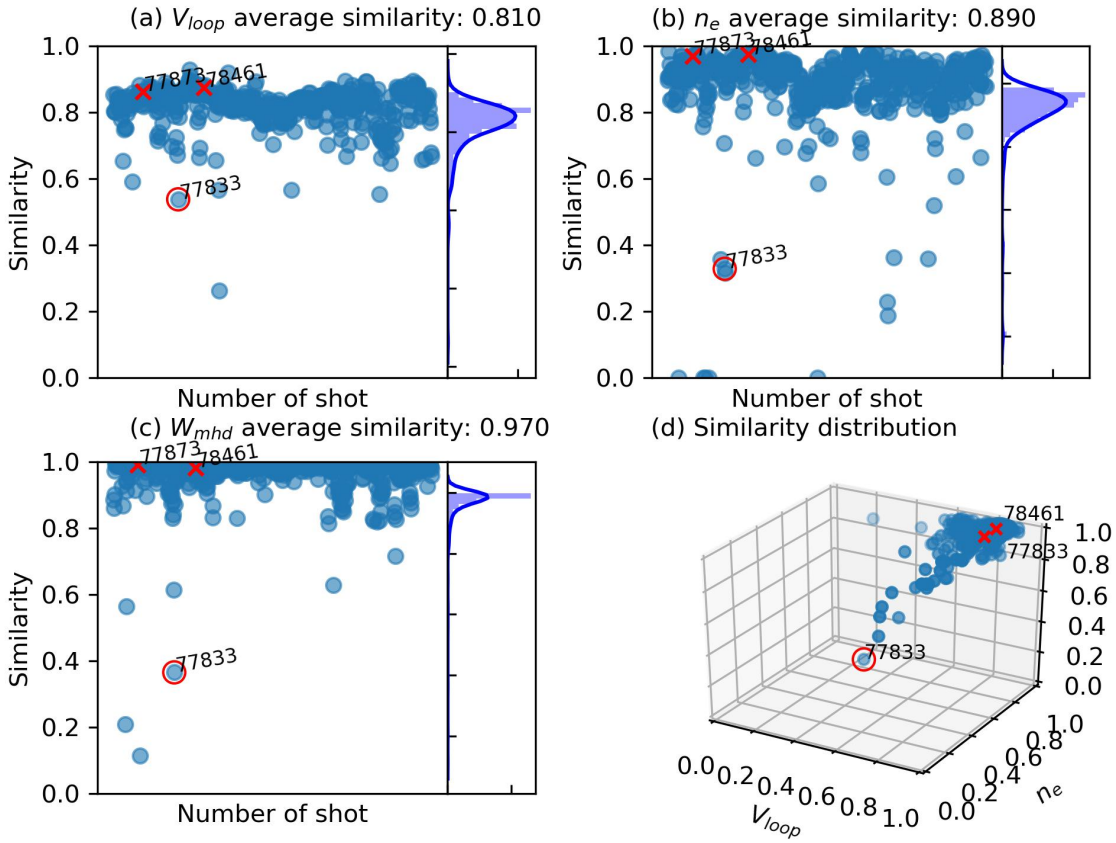


Fig 3. Similarity distribution of our model in the test set

- The similarity is defined as:

$$S(\boldsymbol{x},\boldsymbol{y}) \equiv \max\left(\frac{\Sigma(\boldsymbol{x}-\bar{\boldsymbol{x}})(\boldsymbol{y}-\bar{\boldsymbol{y}})}{\sqrt{\Sigma(\boldsymbol{x}-\bar{\boldsymbol{x}})^2\Sigma(\boldsymbol{y}-\bar{\boldsymbol{y}})^2}},0\right),$$

- In the joint distribution figure of the three parameters, most shots are concentrated in a **limited range**, which reflects the consistency of the model on three target signals.
- Those points far away from the center area indicate that the experiment is running in **abnormal** mode.

# Abnoraml modeling result

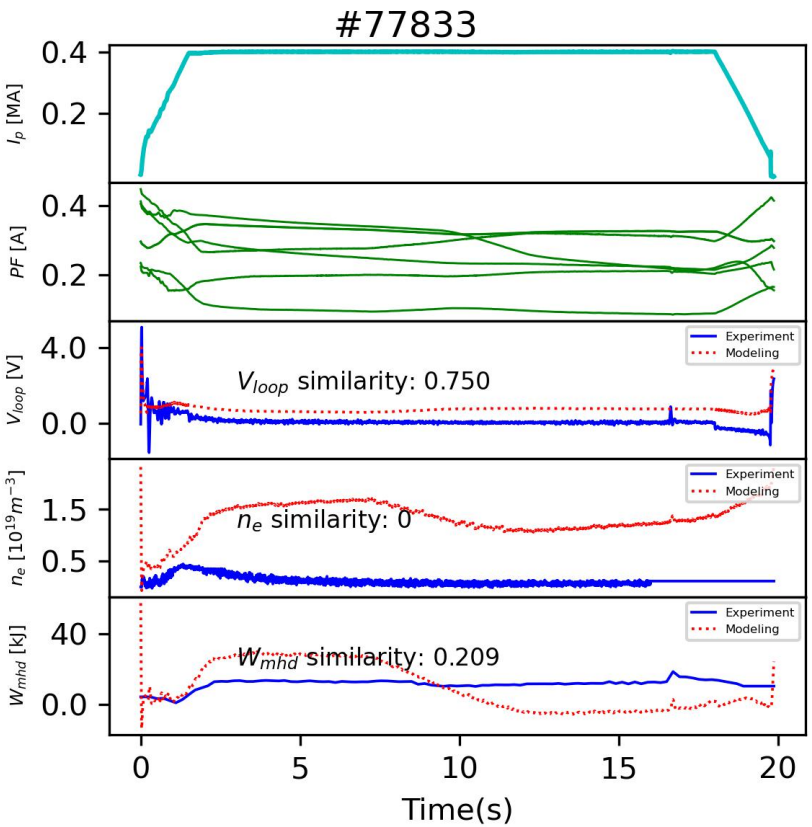


Fig 5. A Typical abnormal shot modeling

- Abnormal results are usually caused by **abnormal** discharge environment.
- shot #77833 deviation caused by abnormal equipment conditions. The shot #77833 is used for the cleaning device.
- If a new discharge mode appears, it may also be abnormal (not seen in this work)[1]


*1. LeCun, Yann, Yoshua Bengio, and Geoffrey Hinton. "Deep learning." nature 521.7553 (2015): 436-444.*

# Outline

- Background
- Method
- Results
- Conclusions
- Other Works

# Conclusions

- Providing reference in the experimental **proposal stage**.
  - The store energy $W_{mhd}$, electron density $n_e$, and loop voltage $V_{loop}$ are predicted in the proposal stage.
  - More complete parameter modeling in the next step

- Providing **accuracy values of whole discharge curve** compared to other models.
  - Modeling the accuracy values of full curve for store energy $W_{mhd}$, electron density $n_e$, and loop voltage $V_{loop}$ instead of just a classification or probability.

- Limitations
  - Temporarily unable to predict a discharge curve in real time.
  - Temporarily have not cross-tokamak validation.
  - Temporarily unable to achieve dimensionless.

- Open problem
  - How to automatically adjust the sensitivity of different signals in the machine learning model.

*Ref.*

Chenguang Wan *et al* 2021 *Nucl. Fusion*

# Outline

- Background
- Method
- Results
- Conclusions
- Other Works

# Bidirectional LSTM for tokamak discharge modeling

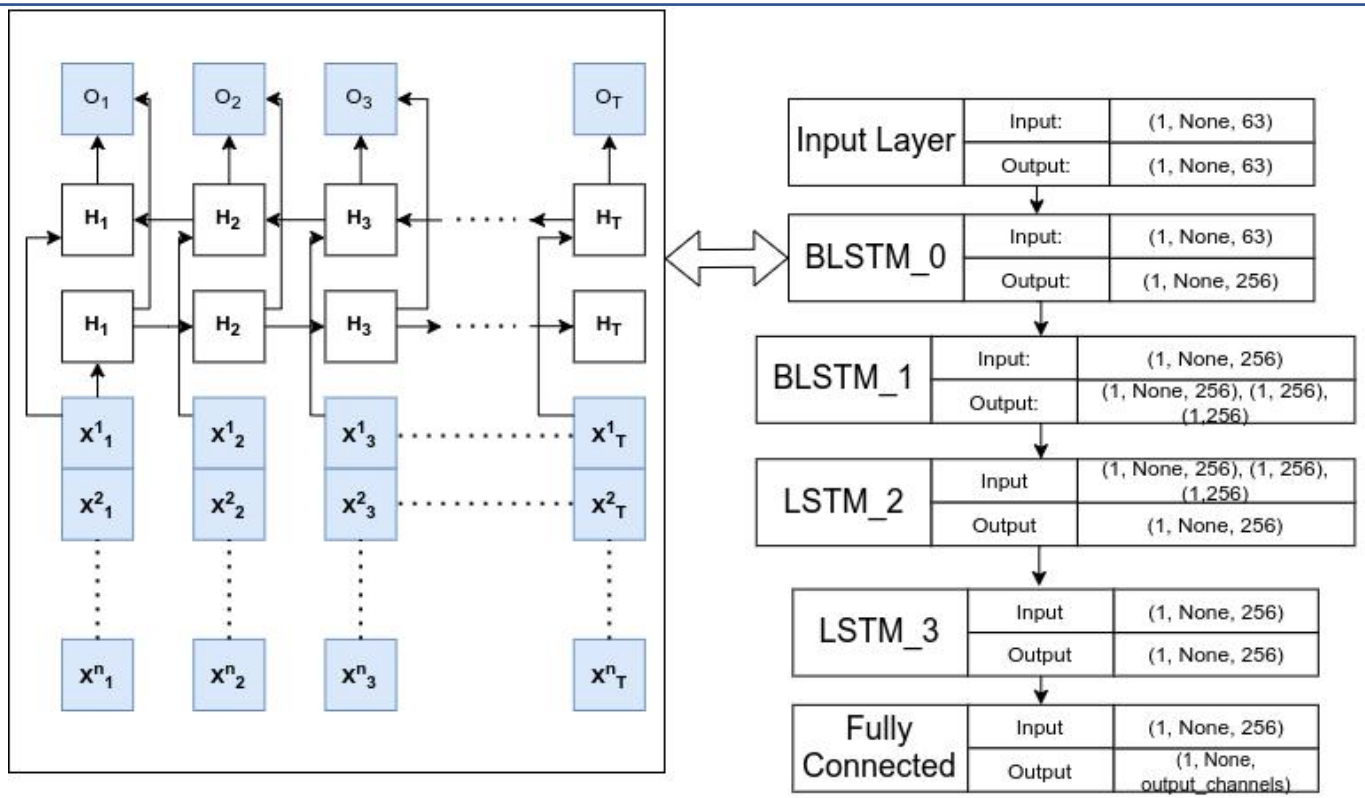


Fig 6. Bidirectional framework for discharge modeling

- Motivation
  - **Offline** discharge modeling **contextual information** is available and equal vital with past information during the experiment proposal stage
- Main idea
  - **Bidirectional LSTM**

*Ref. C. Wan NF (submitted)*

# Thank You!