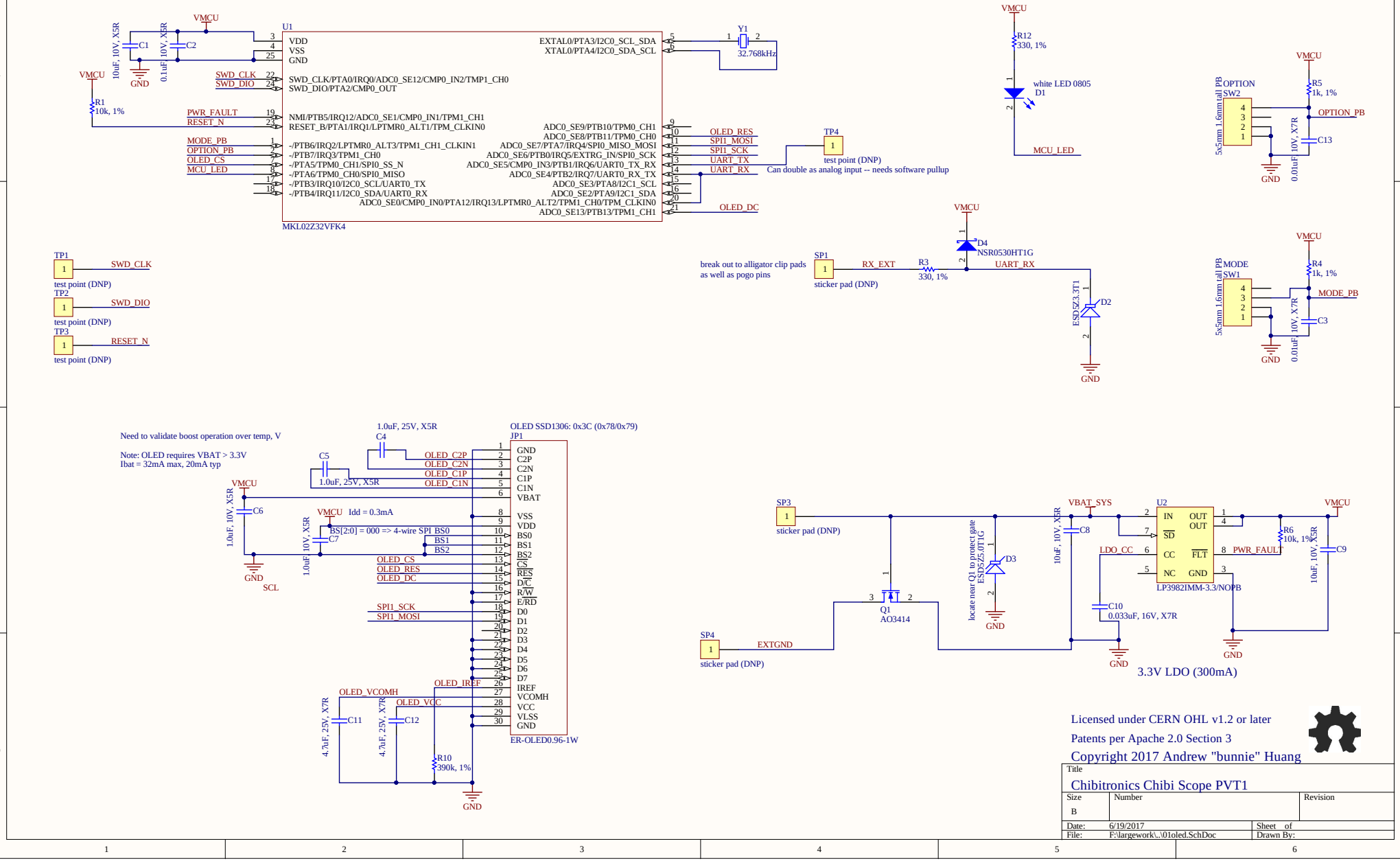

Licensed under CERN OHL v1.2 or later
Patents per Apache 2.0 Section 3
Copyright 2017 Andrew "bunnie" Huang

Title		
Chibitronics Chibi Scope PVT1		
Size: B	Number	Revision
Date: 6/19/2017	Sheet of	
File: F:\largework\..\01oled.SchDoc	Drawn By:	