Port Authority
connecting people to life

PORT AUTHORITY OF ALLEGHENY COUNTY

CONTRACT DRAWINGS

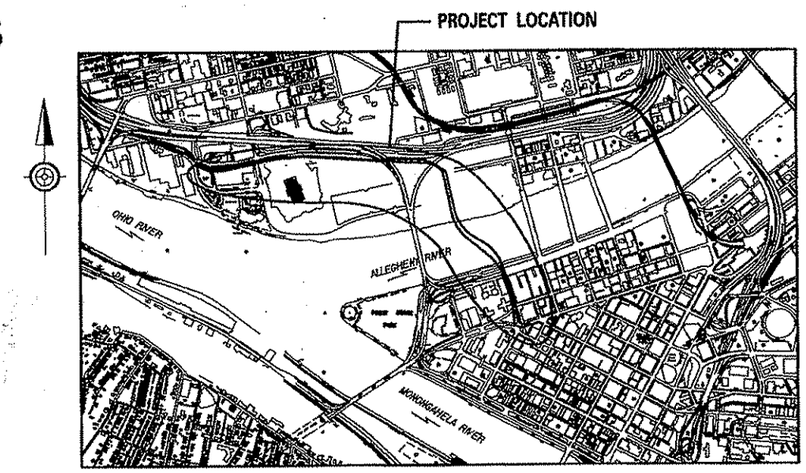

LOCATION MAP
NTS

NORTH SHORE CONNECTOR

NSC TRAIN SYSTEM (SYSTEM WIDE)
VOLUME 2 – ALSO PLANS (REF. DWGS)
CONTRACT NO. NSC–009
IN THE CITY OF PITTSBURGH

FTA PROJECT NO. PA–03–0315

DATE – APRIL 28, 2008

Gannett Fleming
Transit & Rail Systems

DMJM HARRIS | AECOM

FOUR GATEWAY CENTER
20TH FLOOR
PITTSBURGH, PA. 15222

ALSO PLANS
NORTH SHORE CONNECTOR CONTRACT INTERFACES

THE PREPARATION OF THIS DOCUMENT HAS BEEN FINANCED IN PART THROUGH A GRANT FROM THE FEDERAL TRANSIT ADMINISTRATION, U.S. DEPARTMENT OF TRANSPORTATION, UNDER THE URBAN MASS TRANSPORTATION ACT OF 1964, AS AMENDED, FOR THE PORT AUTHORITY OF ALLEGHENY COUNTY, PENNSYLVANIA.

#DATE# #TYPE#
#FILE#

INDEX OF ALSO DRAWINGS

CONTRACT NO.	DRAWING NO.	DRAWING TITLE
		ALSO PLANS
NSC-009	GN001A	TITLE SHEET
NSC-009	GN002A	INDEX OF ALSO DRAWINGS FOR NSC CONTRACT INTERFACES SHEET 1 OF 4
NSC-009	GN003A	INDEX OF ALSO DRAWINGS FOR NSC CONTRACT INTERFACES SHEET 2 OF 4
NSC-009	GN004A	INDEX OF ALSO DRAWINGS FOR NSC CONTRACT INTERFACES SHEET 3 OF 4
NSC-009	GN005A	INDEX OF ALSO DRAWINGS FOR NSC CONTRACT INTERFACES SHEET 4 OF 4
		GATEWAY DOUBLE CROSSOVER (EARLY PROCUREMENT)
NSC-009	GW103	13'-0" CURVED SPLIT SWITCH
NSC-009	GW112	#6 DOUBLE CROSSOVER AT GATEWAY
NSC-009	GW120	SWITCH POINT / GUARD DETAIL
NSC-009	GW121	13'-0" SWITCH POINT DETAIL
NSC-009	GW122	HEEL BLOCK AREA AND SWITCH POINT DETAILS
NSC-009	GW123	115 RE RAIL STRAP GUARD X-SECTION
NSC-009	GW124	STRAP GUARD DRILLING AND FLARING DETAILS
NSC-009	GW125	#6 FROG DETAIL
NSC-009	GW126	HOUSE TOP DETAILS (1 OF 3)
NSC-009	GW127	HOUSE TOP DETAILS (2 OF 3)
NSC-009	GW128	HOUSE TOP DETAILS (3 OF 3)
NSC-009	GW129	FLOATING HEEL BLOCK / MANGANESE SWITCH POINT INSERT DETAILS (1 OF 2)
NSC-009	GW130	FLOATING HEEL BLOCK / MANGANESE SWITCH POINT INSERT DETAILS (2 OF 2)
NSC-009	GW140	TYPICAL M3 POWER SWITCH LAYOUT - DIRECT FIXATION (1 OF 2)
NSC-009	GW141	TYPICAL M3 POWER SWITCH LAYOUT - DIRECT FIXATION (2 OF 2)

CONTRACT NO.	DRAWING NO.	DRAWING TITLE
		ALLEGHENY RIVER TUNNEL LAUNCH PIT TO RECEIVING PIT
NSC-003	TN317	PLAN @ TUNNEL AXIS LEVEL STA L110+00 TO STA L112+00
NSC-003	TN318	PLAN @ TUNNEL AXIS LEVEL STA R20+00 TO STA R22+00
NSC-003	TN326	PLAN @ TUNNEL AXIS LEVEL STA L122+00 TO STA L123+00 / STA L6036+85 TO STA L6037+95
NSC-003	TN327	PLAN @ TUNNEL TRACK LEVEL STA L6037+95 TO STA L6039+55
NSC-003	TN338	LONGITUDINAL ELEVATION STA L6024+00 TO STA L6026+00
NSC-003	TN339	LONGITUDINAL ELEVATION STA R6024+00 TO STA R6026+00
NSC-003	TN350	LONGITUDINAL ELEVATION STA L6036+00 TO STA L6058+00
NSC-003	TN351	LONGITUDINAL ELEVATION STA R6036+00 TO STA R6038+00
NSC-003	TN352	LONGITUDINAL ELEVATION STA L6038+00 TO STA L6039+55.00
NSC-003	TN353	LONGITUDINAL ELEVATION STA R6038+00 TO STA R6039+80.58
NSC-003	TN363	BORED TUNNEL TYPICAL SECTION ZERO SUPERELEVATION
NSC-003	TN364	BORED TUNNEL TYPICAL SECTION MAXIMUM LEFT HAND SUPERELEVATION SHOWING TRANSITION FROM ZERO
NSC-003	TN365	BORED TUNNEL TYPICAL SECTION MAXIMUM RIGHT HAND SUPERELEVATION SHOWING TRANSITION FROM ZERO
NSC-003	TN378	LOW POINT SUMP GENERAL ARRANGEMENT
NSC-003	TN381	EMERGENCY WALKWAY GENERAL ARRANGEMENT SHEET 1 OF 2
NSC-003	TN382	EMERGENCY WALKWAY GENERAL ARRANGEMENT SHEET 2 OF 2
NSC-003	TN387	HANDRAIL AND WALKWAY LADDER DETAILS
NSC-003	TN400	PLAN OF ANCILLARY AREA STA L6036+85.00 TO STA L6037+40.25
NSC-003	TN401	TUNNEL ROOF PLAN STA L6036+85 TO STA L6037+90
NSC-003	TN402	TUNNEL ROOF PLAN STA L6037+90 TO STA L6039+55
NSC-003	TN403	EMERGENCY EGRESS STAIRWAY ROOF PLAN
NSC-003	TN404	EMERGENCY EGRESS STAIRWAY SECTIONS & DETAILS
NSC-003	TN405	EMERGENCY EGRESS STAIRWAY HATCH DETAIL
NSC-003	TN410	TUNNEL CROSS SECTION GEOMETRY STA L6036+87.50 TO L6037+11.85
NSC-003	TN411	TUNNEL CROSS SECTION GEOMETRY STA L6037+11.85 TO L6037+40.25
NSC-003	TN412	TUNNEL CROSS SECTION GEOMETRY STA L6037+40.25 TO L6038+47.83
NSC-003	TN413	TUNNEL CROSS SECTION GEOMETRY STA L6038+47.83 TO L6039+00.91
NSC-003	TN414	TUNNEL CROSS SECTION GEOMETRY STA L6039+00.91 TO L6039+55.00
NSC-003	TN423	DRY STANDPIPE NICHE DETAILS
NSC-003	TN440	REINFORCING SECTION AND DETAILS HEADWALL AT STA L6036+85.00 SHEET 1 OF 2

Gannett Fleming
Transit & Rail Systems

NO.	DATE	DESCRIPTION

REVISIONS

THE PREPARATION OF THIS DOCUMENT HAS BEEN FINANCED IN PART THROUGH A GRANT FROM THE FEDERAL TRANSIT ADMINISTRATION, U.S. DEPARTMENT OF TRANSPORTATION, UNDER THE URBAN MASS TRANSPORTATION ACT OF 1964, AS AMENDED, FOR THE PORT AUTHORITY OF ALLEGHENY COUNTY, PENNSYLVANIA.

COMMONWEALTH OF PENNSYLVANIA REGISTERED PROFESSIONAL MICHAEL T. MCNAMARA ENGINEER No. 27026-E

SIGNATURE

DMJM HARRIS | AECOM
FOUR GATEWAY CENTER
20TH FLOOR
PITTSBURGH, PA. 15222

APPROVED — DATE 4/28/08

DESIGNED	JC TRAUM
DRAWN	JC TRAUM
CHECKED	CD JONES
IN CHARGE	CD JONES
DATE	APR. 28, 2008
SCALE	NTS

PORT AUTHORITY OF ALLEGHENY COUNTY
PITTSBURGH PENNSYLVANIA

NORTH SHORE CONNECTOR
NSC TRAIN SYSTEM (SYSTEM-WIDE)
INDEX OF ALSO DRAWINGS FOR NSC CONTRACT INTERFACES
SHEET 1 OF 4

Port Authority

CONTRACT NO. NSC-009
DWG. NO. GN002A
SHT.

INDEX OF ALSO DRAWINGS

GATEWAY STATION SHELL

CONTRACT NO.	DRAWING NO.	DRAWING TITLE
NSC-004R	TN104	BASE SLAB PROFILE AND LONGITUDINAL SECTION THRU PLINTH
NSC-004R	TN105	MISCELLANEOUS INTERIOR WALL DETAILS
NSC-004R	TN106	MISCELLANEOUS PLATFORM DETAILS
NSC-004R	TN107	EMERGENCY EGRESS HATCH DETAIL
NSC-004R	TN108	EMERGENCY EGRESS STAIRWAY MISCELLANEOUS DETAILS
NSC-004R	TN109	PENN AVE PLACE EMERGENCY EGRESS GENERAL PLAN AND ELEVATION
NSC-004R	TN110	PENN AVE PLACE EMERGENCY EGRESS VAULT DEMOLITION DETAILS
NSC-004R	TN405	EXISTING GATEWAY STATION DEMOLITION PLAN
NSC-004R	TN406	EXISTING GATEWAY STATION DEMOLITION CROSS SECTIONS
NSC-004R	TN411	GATEWAY STATION PLAN @ TRACK LEVEL SHEET 2 OF 7
NSC-004R	TN412	GATEWAY STATION PLAN @ TRACK LEVEL SHEET 3 OF 7
NSC-004R	TN413	GATEWAY STATION PLAN @ TRACK LEVEL SHEET 4 OF 7
NSC-004R	TN414	GATEWAY STATION PLAN @ TRACK LEVEL SHEET 5 OF 7
NSC-004R	TN415	GATEWAY STATION PLAN @ TRACK LEVEL SHEET 6 OF 7
NSC-004R	TN416	GATEWAY STATION PLAN @ TRACK LEVEL SHEET 7 OF 7
NSC-004R	TN418	GATEWAY STATION PLAN @ PLATFROM LEVEL SHEET 1 OF 3
NSC-004R	TN419	GATEWAY STATION PLAN @ PLATFROM LEVEL SHEET 2 OF 3
NSC-004R	TN420	GATEWAY STATION PLAN @ PLATFROM LEVEL SHEET 3 OF 3
NSC-004R	TN422	GATEWAY STATION PLAN @ ROOF LEVEL SHEET 2 OF 4
NSC-004R	TN426	PARTIAL PLAN AT SOUTH EMERGENCY EGRESS STAIR @ TRACK LEVEL SHEET 1 OF 3
NSC-004R	TN427	PARTIAL PLAN AT SOUTH EMERGENCY EGRESS STAIR @ PLATFORM LEVEL SHEET 2 OF 3
NSC-004R	TN428	PARTIAL PLAN AT SOUTH EMERGENCY EGRESS STAIR @ ROOF LEVEL SHEET 3 OF 3
NSC-004R	TN429	PARTIAL PLAN AT VENT CHASE @ TRACK LEVEL SHEET 1 OF 2
NSC-004R	TN430	PARTIAL PLAN AT VENT CHASE @ PLATFORM LEVEL SHEET 2 OF 2
NSC-004R	TN431	PARTIAL PLAN AT NORTH EMERGENCY EGRESS STAIR @ TRACK LEVEL SHEET 1 OF 3
NSC-004R	TN432	PARTIAL PLAN AT NORTH EMERGENCY EGRESS STAIR @ PLATFORM LEVEL SHEET 2 OF 3
NSC-004R	TN433	PARTIAL PLAN AT NORTH EMERGENCY EGRESS STAIR @ ROOF LEVEL SHEET 3 OF 3
NSC-004R	TN435	LONGITUDINAL ELEVATION STA L6016+00 TO STA L6014+00
NSC-004R	TN436	LONGITUDINAL ELEVATION STA L6014+00 TO STA L6012+00
NSC-004R	TN437	LONGITUDINAL ELEVATION STA L6012+00 TO STA L6009+65
NSC-004R	TN438	LONGITUDINAL ELEVATION STA R6009+70 TO STA R6012+00
NSC-004R	TN439	LONGITUDINAL ELEVATION STA R6012+00 TO STA R6014+00
NSC-004R	TN440	LONGITUDINAL ELEVATION STA R6014+00 TO STA R6016+00
NSC-004R	TN442	CROSS SECTION AT TIE-IN TO EXISTING STA 1009+51 TO STA 1010+24
NSC-004R	TN443	CROSS SECTION AT TIE-IN TO EXISTING STA 1008+96 TO STA 1009+51
NSC-004R	TN444	CROSS SECTION STA L6010+50 TO L6010+64
NSC-004R	TN445	CROSS SECTION STA L6010+64 TO L6011+18.69
NSC-004R	TN446	CROSS SECTION STA L6011+18.69 TO L6011+75
NSC-004R	TN448	CROSS SECTION STA L6011+75 TO L6012+25
NSC-004R	TN449	CROSS SECTION STA L6012+25 TO L6012+75
NSC-004R	TN450	CROSS SECTION STA L6012+75 TO L6013+24
NSC-004R	TN451	CROSS SECTION STA L6013+24 TO L6013+51
NSC-004R	TN452	CROSS SECTION STA L6013+51 TO L6013+75
NSC-004R	TN453	CROSS SECTION STA L6013+75 TO L6014+18
NSC-004R	TN454	CROSS SECTION STA L6014+18 TO L6014+35
NSC-004R	TN455	CROSS SECTION STA L6014+35 TO L6014+49.57
NSC-004R	TN540	RECEIVING PIT HEAD WALL REINFORCEMENT @ BORED TUNNEL SHEET 1 OF 2
NSC-004R	TN581	GATEWAY STATION PLAN @ TRACK LEVEL - CONDUIT ROUTING PLAN SHEET 1 OF 6
NSC-004R	TN582	GATEWAY STATION PLAN @ TRACK LEVEL - CONDUIT ROUTING PLAN SHEET 2 OF 6
NSC-004R	TN583	GATEWAY STATION PLAN @ TRACK LEVEL - CONDUIT ROUTING PLAN SHEET 3 OF 6
NSC-004R	TN584	GATEWAY STATION PLAN @ PLATFORM LEVEL - CONDUIT ROUTING PLAN SHEET 4 OF 6
NSC-004R	TN585	GATEWAY STATION PLAN @ PLATFORM LEVEL - CONDUIT ROUTING PLAN SHEET 5 OF 6
NSC-004R	TN586	GATEWAY STATION PLAN @ PLATFORM LEVEL - CONDUIT ROUTING PLAN SHEET 6 OF 6
NSC-004R	TN587	CONDUIT EMBEDMENTS AND PULL BOX SCHEMATIC
NSC-004R	TN588	GATEWAY STATION PLAN - CONDUIT ROUTING PLAN DETAILS (1 OF 3)
NSC-004R	TN589	GATEWAY STATION PLAN - CONDUIT ROUTING PLAN DETAILS (2 OF 3)
NSC-004R	TN589A	GATEWAY STATION PLAN - CONDUIT ROUTING PLAN DETAILS (3 OF 3)
NSC-004R	TN590	CONDUIT SCHEDULE (1 OF 2)
NSC-004R	TN591	CONDUIT SCHEDULE (2 OF 2)
NSC-004R	TN592	ELECTRICAL BLOCKOUT LOCATION PLAN PLATFORM LEVEL

NORTHSIDE STATION AND CUT & COVER TUNNEL WEST

CONTRACT NO.	DRAWING NO.	DRAWING TITLE
NSC-006	CV107	ROADWAY PLAN STA 6046+00 TO STA 6051+50 LEFT TRACK
NSC-006	TN600-1	NORTH SHORE GENERAL PLAN STA L6039+55 TO STA L6044+10
NSC-006	TN601	NORTH SHORE GENERAL PLAN STA L6044+10 TO STA L6049+00
NSC-006	TN602	NORTH SHORE GENERAL PLAN STA L6049+00 TO STA L6051+94.00
NSC-006	TN610-3	PLAN @ TRACK LEVEL STA L6039+55 TO STA L6041+00
NSC-006	TN611-1	PLAN @ TRACK LEVEL STA L6041+00 TO STA L6043+00
NSC-006	TN612-1	PLAN @ TRACK LEVEL STA L6043+00 TO STA L6045+00
NSC-006	TN613	PLAN @ TRACK LEVEL STA L6045+00 TO STA L6046+80
NSC-006	TN614	PLAN @ TRACK LEVEL STA L6046+80 TO STA L6048+85
NSC-006	TN615-1	PLAN @ TRACK LEVEL STA L6048+85 TO STA L6051+00
NSC-006	TN616	PLAN @ TRACK LEVEL STA L6051+00 TO STA L6051+94.00
NSC-006	TN618-3	CONCOURSE PLAN STA L6039+55.00 TO STA L6040+93.86
NSC-006	TN620-3	CONCOURSE LEVEL PLAN STA L6043+17.54 TO STA L6044+07.77
NSC-006	TN621-1	CONCOURSE PLAN STATION ENTRY CONCOURSE
NSC-006	TN624-1	ROOF PLAN STA L6043+00 TO STA L6044+07.77
NSC-006	TN630-2	LONGITUDINAL ELEVATION STA R6039+80.58 TO R6041+00
NSC-006	TN631-1	LONGITUDINAL ELEVATION STA R6041+00 TO R6043+00
NSC-006	TN632-3	LONGITUDINAL ELEVATION STA R6043+00 TO R6045+00
NSC-006	TN633	LONGITUDINAL ELEVATION STA R6045+00 TO R6047+00
NSC-006	TN634	LONGITUDINAL ELEVATION STA R6047+00 TO R6049+00
NSC-006	TN635-1	LONGITUDINAL ELEVATION STA R6049+00 TO R6051+94.00
NSC-006	TN636-2	RIGHT BOAT WALL LONGITUDINAL ELEVATION STA R6048+95 TO R6051+94.00
NSC-006	TN643	LEFT TRACK SLURRY WALL ELEVATION STA L6042+00 TO STA L6044+07.77
NSC-006	TN644	RIGHT TRACK SLURRY WALL ELEVATION STA R6042+00 TO STA R6044+07.77
NSC-006	TN650	TUNNEL CROSS SECTION GEOMETRY STA L6039+77.31 TO STA L6040+32.85
NSC-006	TN651-2	STATION CROSS SECTION GEOMETRY STA L6040+32.85 TO STA L6040+53.42
NSC-006	TN652-2	STATION CROSS SECTION GEOMETRY STA L6040+53.42 TO STA L6041+12.50
NSC-006	TN653-2	STATION CROSS SECTION GEOMETRY STA L6041+12.50 TO STA L6043+17.54
NSC-006	TN654-1	STATION SECTION GEOEMETRY STA L6043+17.54 TO STA L6044+07.77
NSC-006	TN655-2	TUNNEL CROSS SECTION GEOMETRY STA L6044+07.77 TO STA L6045+50.00
NSC-006	TN656	TUNNEL CROSS SECTION GEOMETRY STA L6045+50.00 TO STA L6047+00
NSC-006	TN657-1	TUNNEL CROSS SECTION GEOMETRY STA L6047+00 TO STA L6048+95.00
NSC-006	TN658-2	PLAN AND SECTION AT EAST ANCILLARY AREA
NSC-006	TN659-2	WEST ANCILLARY AREA WALL ELEVATIONS
NSC-006	TN660	BOAT CROSS SECTION GEOMETRY STA L6048+95.00 TO STA L6051+94.00
NSC-006	TN661-2	EAST ANCILLARY AREA WALL ELEVATION
NSC-006	TN669-2	DRY STANDPIPE NICHE DETAILS
NSC-006	TN678	REINFORCING SECTIONS - STA L6039+55 TO STA L6040+53.42 SHEET 6 OF 6
NSC-006	TN703-1	SUMP CHAMBER IN BOAT SECTION
NSC-006	TN712	CATENARY ANCHOR BOLT LAYOUT AND DETAILS
NSC-006	TN713-1	NORTHSIDE STATION GROUND GRID
NSC-006	PL600	TUNNEL DRAINAGE PLAN STA L6039+55 TO STA L6041+40
NSC-006	PL601	TUNNEL DRAINAGE PLAN STA L6041+40 TO STA L6046+60
NSC-006	PL602	TUNNEL DRAINAGE PLAN STA L6046+60 TO STA L6051+94
NSC-006	PL610	TUNNEL DRAINAGE DETAILS SHEET 1 OF 1

Gannett Fleming
Transit & Rail Systems

NO.	DATE	DESCRIPTION

REVISIONS

THE PREPARATION OF THIS DOCUMENT HAS BEEN FINANCED IN PART THROUGH A GRANT FROM THE FEDERAL TRANSIT ADMINISTRATION, U.S. DEPARTMENT OF TRANSPORTATION, UNDER THE URBAN MASS TRANSPORTATION ACT OF 1964, AS AMENDED. FOR THE PORT AUTHORITY OF ALLEGHENY COUNTY, PENNSYLVANIA.

COMMONWEALTH OF PENNSYLVANIA REGISTERED PROFESSIONAL MICHAEL T. MCNAMARA ENGINEER No. 27323-E

SIGNATURE

DMJM HARRIS | AECOM
FOUR GATEWAY CENTER
20TH FLOOR
PITTSBURGH, PA. 15222

APPROVED DATE 4/28/08

DESIGNED	JC TRAUM
DRAWN	JC TRAUM
CHECKED	CD JONES
IN CHARGE	CD JONES
DATE	APR. 28, 2008
SCALE	NTS

PORT AUTHORITY OF ALLEGHENY COUNTY
PITTSBURGH PENNSYLVANIA

NORTH SHORE CONNECTOR
NSC TRAIN SYSTEM (SYSTEM-WIDE)
INDEX OF ALSO DRAWINGS FOR NSC CONTRACT INTERFACES
SHEET 2 OF 4

Port Authority

CONTRACT NO. NSC-009
DWG. NO. GN003A
SHT.

INDEX OF ALSO DRAWINGS

CONTRACT NO.	DRAWING NO.	DRAWING TITLE
		AERIAL STRUCTURE, RETAINED FILL, DEMOLITION OF MILLER PRINTING (ALLEGHENY STRUCTURE)
NSC-007	ST001	GENERAL PLAN & ELEVATION STA 6051+50 TO STA 6074+00 LEFT TRACK
NSC-007	ST002	GENERAL PLAN & ELEVATION STA 6074+00 TO STA 6079+50 LEFT TRACK
NSC-007	ST003	GENERAL PLAN & ELEVATION STA 6079+50 TO STA 6084+00 LEFT TRACK
NSC-007	ST004	GENERAL PLAN & ELEVATION STA 6084+00 TO STA 6088+22.60 LEFT TRACK
NSC-007	ST008	TYPICAL SECTIONS SHEET 1 OF 5
NSC-007	ST009	TYPICAL SECTIONS SHEET 2 OF 5
NSC-007	ST010	TYPICAL SECTIONS SHEET 3 OF 5
NSC-007	ST011	TYPICAL SECTIONS SHEET 4 OF 5
NSC-007	ST012	TYPICAL SECTIONS SHEET 5 OF 5
NSC-007	ST025	RETAINED FILL SECTION MSE WALL DETAILS 3
NSC-007	ST040	PIER PLAN & ELEVATION PIER 14
NSC-007	ST041	PIER PLAN & ELEVATION PIER 14 DETAILS
NSC-007	ST081	GIRDER DETAILS MISC STEEL DETAILS 2
NSC-007	ST085	DECK PLAN SPAN 1
NSC-007	ST086	DECK PLAN SPAN 2
NSC-007	ST087	DECK PLAN SPAN 3
NSC-007	ST088	DECK PLAN SPAN 4
NSC-007	ST089	DECK PLAN SPAN 5
NSC-007	ST090	DECK PLAN SPAN 6
NSC-007	ST091	DECK PLAN SPAN 7
NSC-007	ST092	DECK PLAN SPAN 8
NSC-007	ST093	DECK PLAN SPAN 9
NSC-007	ST094	DECK PLAN SPAN 10
NSC-007	ST095	DECK PLAN SPAN 11
NSC-007	ST096	DECK PLAN SPAN 12
NSC-007	ST097	DECK PLAN SPAN 13
NSC-007	ST098	DECK PLAN SPAN 14
NSC-007	ST101	DECK TYPICALS SHEET 1 OF 2
NSC-007	ST102	DECK TYPICALS SHEET 2 OF 2
NSC-007	ST103	DECK DETAILS SHEET 1 OF 6
NSC-007	ST104	DECK DETAILS SHEET 2 OF 6
NSC-007	ST105	DECK DETAILS SHEET 3 OF 6
NSC-007	ST106	DECK DETAILS SHEET 4 OF 6
NSC-007	ST107	DECK DETAILS SHEET 5 OF 6
		GATEWAY STATION FINSHES
NSC-010G	AR004	EXISTING LOOP ROOM NUMBERS REF. NSC-009 CONTRACT
NSC-010G	AR101	OVERALL PLATFORM & EXISTING LOOP PLAN
NSC-010G	AR102	PARTIAL PLAN PARTIAL 1 CUT EL. +708'-0"
NSC-010G	AR103	PARTIAL PLAN PARTIAL 2 CUT EL. +708'-0"
NSC-010G	AR104	PARTIAL PLAN PARTIAL 3 CUT EL. +708'-0"
NSC-010G	AR105	PARTIAL PLAN PARTIAL 4 CUT EL. +708'-0"
NSC-010G	AR106	PARTIAL PLAN PARTIAL 5 CUT EL. +708'-0"
NSC-010G	AR107	PARTIAL PLAN PARTIAL 6 CUT EL. +708'-0"
NSC-010G	AR108	CONCOURSE PLAN CUT EL. +734'-0"
NSC-010G	AR109	ROOF PLAN
NSC-010G	AR113	ELECTRICAL BLOCKOUT LOCATION PLAN PLATFORM LEVEL
NSC-010G	AR201	OVERALL PLATFORM & EXISTING LOOP PLAN RCP CUT EL +708'-0"
NSC-010G	AR202	PLATFORM RCP PARTIAL 1 CUT EL +708'-0"
NSC-010G	AR203	PLATFORM RCP PARTIAL 2 CUT EL +708'-0"
NSC-010G	AR204	PLATFORM RCP PARTIAL 3 CUT EL +708'-0"
NSC-010G	AR205	PLATFORM RCP PARTIAL 4 CUT EL +708'-0"
NSC-010G	AR206	PLATFORM RCP PARTIAL 5 CUT EL +708'-0"
NSC-010G	AR207	PLATFORM RCP PARTIAL 6 CUT EL +708'-0"
NSC-010G	AR208	CONCOURSE RCP CUT EL +734'-0"
NSC-010G	AR301	EXTERIOR ELEVATIONS
NSC-010G	AR401	LATERAL SECTIONS X.40 & X.112

CONTRACT NO.	DRAWING NO.	DRAWING TITLE
		GATEWAY STATION FINSHES
NSC-010G	AR402	LATERAL SECTIONS X.144 & X.197.2
NSC-010G	AR403	LONGITUDINAL SECTION 1
NSC-010G	AR404	LONGITUDINAL SECTION 2
NSC-010G	AR701	INTERIOR ELEVATIONS 1 OF 2
NSC-010G	AR704	EXHAUST TOWER ELEVATIONS AND DETAILS
NSC-010G	AR706	ENTRANCE SECTIONS AND ELEVATIONS
NSC-010G	AR708	SECURITY GATE DETAILS
NSC-010G	AR709	MURAL DETAILS
NSC-010G	AR711	LIGHT PENDANT PLAN AND ELEVATIONS
NSC-010G	AR712	LIGHT PENDANT DETAILS
NSC-010G	AR741	LIGHT POST PLANS 2 OF 2
NSC-010G	AR742	LIGHT POST ELEVATIONS 1 OF 2
NSC-010G	AR743	LIGHT POST ELEVATIONS 2 OF 2
NSC-010G	AR744	CONDUIT DETAILS 1 OF 1
NSC-010G	AR745	FLOODLIGHT DETAILS 1 OF 1
NSC-010G	AR746	CAMERA DETAILS 1 OF 1
NSC-010G	AR747	SPEAKER DETAILS 1 OF 1
NSC-010G	AR749	ADA STOBE AND MIROPHONE DETAILS 1 OF 1
NSC-010G	AR750	FIRE ALARM DETAILS 1 OF 1
NSC-010G	AR751	EMBED PLATE DETAILS 1 OF 1
NSC-010G	AR752	DOWNSTAND SIGNAGE DETAILS 2 OF 2
NSC-010G	AR754	POST & RAILING SIGNAGE DETAILS 1 OF 1
NSC-010G	AR756	DEVICE MOUNTING DETAILS 1 OF 3
NSC-010G	AR757	DEVICE MOUNTING DETAILS 2 OF 3
NSC-010G	AR760	SIGN SCHEDULE
NSC-010G	AR761	PLATFORM LEVEL SIGNAGE LAYOUT 1 OF 1
NSC-010G	AR762	CONCOURSE LEVEL SIGNAGE LAYOUT 1 OF 1
NSC-010G	AR763	SIGNAGE DETAILS 1 OF 2
NSC-010E	EL001	ELECTRICAL RISER
NSC-010E	EL002	ELECTRICAL PANEL SCHEDULES
NSC-010E	EL003	ELECTRICAL PANEL SCHEDULES
NSC-010E	EL004	ELECTRICAL PANEL SCHEDULES
NSC-010E	EL005	"L" CONDUIT SCHEDULE PLATFORM LEVEL
NSC-010E	EL006	ELECTRICAL CONDUIT AND MECHANICAL SCHEDULES
NSC-010E	EL007	CONDUIT EMBEDMENTS AND PULL BOX SCHEMATIC
NSC-010E	EL010	ELECTRICAL PLAN - PLATFORM LEVEL OVERALL
NSC-010E	EL011	POWER PLAN - PLATFORM LEVEL PARTIAL 1
NSC-010E	EL012	POWER PLAN - PLATFORM LEVEL PARTIAL 2
NSC-010E	EL013	POWER PLAN - PLATFORM LEVEL PARTIAL 3
NSC-010E	EL014	POWER PLAN - PLATFORM LEVEL PARTIAL 4
NSC-010E	EL015	POWER PLAN - PLATFORM LEVEL PARTIAL 5
NSC-010E	EL016	POWER PLAN - PLATFORM LEVEL PARTIAL 6
NSC-010E	EL017	POWER PLAN - PLATFORM LEVEL PARTIAL 7
NSC-010E	EL018	LIGHTING PLAN - PLATFORM LEVEL PARTIAL 1
NSC-010E	EL019	LIGHTING PLAN - PLATFORM LEVEL PARTIAL 2
NSC-010E	EL020	LIGHTING PLAN - PLATFORM LEVEL PARTIAL 3
NSC-010E	EL021	LIGHTING PLAN - PLATFORM LEVEL PARTIAL 4
NSC-010E	EL022	LIGHTING PLAN - PLATFORM LEVEL PARTIAL 5
NSC-010E	EL023	LIGHTING PLAN - PLATFORM LEVEL PARTIAL 6
NSC-010E	EL024	LIGHTING PLAN - PLATFORM LEVEL PARTIAL 7
NSC-010P	FP001	FIRE PROTECTION DETAILS
NSC-010P	FP002	FIRE PROTECTION PLAN - PLATFORM LEVEL OVERALL
NSC-010P	FP003	FIRE PROTECTION PLAN - PLATFORM LEVEL PARTIAL 1
NSC-010P	FP004	FIRE PROTECTION PLAN - PLATFORM LEVEL PARTIAL 2
NSC-010P	FP005	FIRE PROTECTION PLAN - PLATFORM LEVEL PARTIAL 3
NSC-010P	FP006	FIRE PROTECTION PLAN - PLATFORM LEVEL PARTIAL 4
NSC-010P	FP007	FIRE PROTECTION PLAN - PLATFORM LEVEL PARTIAL 5
NSC-010P	FP008	FIRE PROTECTION PLAN - PLATFORM LEVEL PARTIAL 6
NSC-010P	FP010	FIRE PROTECTION PLAN - UNDER PLATFORM

Gannett Fleming
Transit & Rail Systems

NO.	DATE	DESCRIPTION

REVISIONS

THE PREPARATION OF THIS DOCUMENT HAS BEEN FINANCED IN PART THROUGH A GRANT FROM THE FEDERAL TRANSIT ADMINISTRATION, U.S. DEPARTMENT OF TRANSPORTATION, UNDER THE URBAN MASS TRANSPORTATION ACT OF 1964, AS AMENDED, FOR THE PORT AUTHORITY OF ALLEGHENY COUNTY, PENNSYLVANIA.

COMMONWEALTH OF PENNSYLVANIA REGISTERED PROFESSIONAL MICHAEL T. MCNAMARA ENGINEER No. 27318-E

SIGNATURE

DMJM HARRIS | AECOM
FOUR GATEWAY CENTER
20TH FLOOR
PITTSBURGH, PA. 15222

APPROVED 4/28/08 DATE

DESIGNED	JC TRAUM
DRAWN	JC TRAUM
CHECKED	CD JONES
IN CHARGE	CD JONES
DATE	APR. 28, 2008
SCALE	NTS

PORT AUTHORITY OF ALLEGHENY COUNTY
PITTSBURGH PENNSYLVANIA

NORTH SHORE CONNECTOR
NSC TRAIN SYSTEM (SYSTEM-WIDE)
INDEX OF ALSO DRAWINGS FOR NSC CONTRACT INTERFACES
SHEET 3 OF 4

Port Authority

CONTRACT NO. NSC-009
DWG. NO. GN004A SHT.

INDEX OF ALSO DRAWINGS

CONTRACT NO.	DRAWING NO.	DRAWING TITLE
		NORTHSIDE STATION FINISHES
NSC-011	NAR104	PARTIAL STREET LEVEL PLAN A VENTILATION BULKHEAD AT STAIR 'D'
NSC-011	NAR106	PARTIAL STREET LEVEL PLAN C VENTILATION BULKHEAD AT STAIR 'A'
NSC-011	NAR107A	PARTIAL STREET LEVEL PLAN D ALTERNATE
NSC-011	NAR108	PARTIAL CONCOURSE LEVEL PLAN A
NSC-011	NAR109	PARTIAL CONCOURSE LEVEL PLAN B
NSC-011	NAR110	PARTIAL CONCOURSE LEVEL PLAN C
NSC-011	NAR111	PARTIAL CONCOURSE LEVEL PLAN D
NSC-011	NAR113	PARTIAL PLATFORM LEVEL PLAN B
NSC-011	NAR114	PARTIAL PLATFORM LEVEL PLAN C
NSC-011	NAR315	PARTIAL ELEVATION SLOPED METAL PANEL WALL
NSC-011	NAR316	PARTIAL ELEVATION SLOPED METAL PANEL WALL
NSC-011	NAR400	BUILDING SECTION CENTER OF PLATFORM - C
NSC-011	NAR402	BUILDING SECTION CENTER OF PLATFORM - A
NSC-011	NAR403	BUILDING SECTION EAST STA 6040+70.00
NSC-011	NAR406	BUILDING SECTION WEST STA 6040+85.00
NSC-011	NAR407	BUILDING SECTIONS TUNNEL STA 6042+00 & 6043+00
NSC-011	NAR515	WALL SECTIONS SLOPED METAL PANEL WALL
NSC-011	NAR516	SECTION DETAILS SLOPED METAL PANEL WALL
NSC-011	NAR525	WALL SECTIONS & ELEVATION WEST WALL: PERFORATED METAL PANEL
NSC-011	NAR600	STAIR 'A' PLANS
NSC-011	NAR601	STAIR 'A' SECTION
NSC-011	NAR602	STAIR 'A' SECTION
NSC-011	NAR604	STAIR 'C' PLANS & SECTION
NSC-011	NAR605	STAIR 'D' PLANS & SECTION
NSC-011	NAR700	ENTRANCE SIGNAGE POLE PLANS & ELEVATIONS
NSC-011	NAR710	PLATFORM SIGNAGE POLE PLANS & ELEVATIONS
NSC-011	NAR711	PLATFORM SIGNAGE POLE DETAILS
NSC-011	NAR720	SIGNAGE FRAME STRUCTURES PLANS & ELEVATIONS
NSC-011	NAR909	PARTIAL CONCOURSE LEVEL REFLECTED CEILING PLAN PLAN B
NSC-011	NAR910	PARTIAL CONCOURSE LEVEL REFLECTED CEILING PLAN PLAN C
NSC-011	NAR911	PARTIAL CONCOURSE LEVEL REFLECTED CEILING PLAN PLAN D
NSC-011	NAR913	PARTIAL PLATFORM LEVEL REFLECTED CEILING PLAN PLAN B
NSC-011	NAR914	PARTIAL PLATFORM LEVEL REFLECTED CEILING PLAN PLAN C
NSC-011	NAR920	CEILING DETAILS PERFORATED METAL SUSPENDED CEILING
NSC-011	NSN102	PARTIAL CONCOURSE LEVEL PLAN A
NSC-011	NSN103	PARTIAL CONCOURSE LEVEL PLAN B
NSC-011	NSN104	PARTIAL CONCOURSE LEVEL PLAN C
NSC-011	NSN105	PARTIAL CONCOURSE LEVEL PLAN D
NSC-011	NSN106	PARTIAL PLATFORM LEVEL PLAN B
NSC-011	NSN107	PARTIAL PLATFORM LEVEL PLAN C
NSC-011	NSN701	(SIGN TYPE G)
NSC-011	NSN702	PLATFORM SIGNAGE POLE PLANS AND ELEVATIONS
NSC-011	NSN711	(SIGN TYPE E1)
NSC-011	NEL107	PARTIAL CONCOURSE LEVEL LIGHTING PLAN A
NSC-011	NEL108	PARTIAL CONCOURSE LEVEL LIGHTING PLAN B
NSC-011	NEL109	PARTIAL CONCOURSE LEVEL LIGHTING PLAN C
NSC-011	NEL110	PARTIAL CONCOURSE LEVEL LIGHTING PLAN D
NSC-011	NEL111	PARTIAL PLATFORM LEVEL LIGHTING PLAN B
NSC-011	NEL112	PARTIAL PLATFORM LEVEL LIGHTING PLAN C
NSC-011	NEL113	PARTIAL STREET LEVEL POWER PLAN A
NSC-011	NEL116	PARTIAL CONCOURSE LEVEL POWER PLAN A
NSC-011	NEL117	PARTIAL CONCOURSE LEVEL POWER PLAN B
NSC-011	NEL118	PARTIAL CONCOURSE LEVEL POWER PLAN C
NSC-011	NEL119	PARTIAL CONCOURSE LEVEL POWER PLAN B
NSC-011	NEL120	PARTIAL PLATFORM LEVEL POWER PLAN B
NSC-011	NEL121	PARTIAL PLATFORM LEVEL POWER PLAN C
NSC-011	NEL402	COMMUNICATION DEVICE SCHEDULE AND SYMBOL LIST
NSC-011	NEL501	PANEL SCHEDULE
NSC-011	NEL606	SINGLE LINE DIAGRAM

CONTRACT NO.	DRAWING NO.	DRAWING TITLE
		NORTHSIDE STATION FINISHES
NSC-011	NFP001	FIRE PROTECTION GENERAL INFORMATION
NSC-011	NFP105	FIRE PROTECTION PARTIAL CONCOURSE LEVEL PLAN A
NSC-011	NFP106	FIRE PROTECTION PARTIAL CONCOURSE LEVEL PLAN B
NSC-011	NFP107	FIRE PROTECTION PARTIAL CONCOURSE LEVEL PLAN C
NSC-011	NFP108	FIRE PROTECTION PARTIAL CONCOURSE LEVEL PLAN D
NSC-011	NFP109	FIRE PROTECTION PARTIAL PLATFORM LEVEL PLAN B
NSC-011	NFP110	FIRE PROTECTION PARTIAL PLATFORM LEVEL PLAN C
		ALLEGHENY STATION
NSC-012-G	AR102	PARTIAL STREET LEVEL CONSTRUCTION PLAN - WEST
NSC-012-G	AR104	PARTIAL MEZZANINE LEVEL CONSTRUCTION PLAN - WEST
NSC-012-G	AR300	NORTH AND SOUTH EXTERIOR ELEVATIONS
NSC-012-G	AR303	EAST AND WEST STATION AND STAIR "C" ELEVATIONS
NSC-012-G	AR400	LONGITUDINAL BUILDING SECTION - NORTH AND SOUTH
NSC-012-G	AR401	PARTIAL LONGITUDINAL BUILDING SECTION - NORTH
NSC-012-G	AR402	PARTIAL LONGITUDINAL BUILDING SECTION - SOUTH
NSC-012-G	AR403	TRANSVERSE BUILDING SECTIONS
NSC-012-G	AR404	TRANSVERSE BUILDING SECTIONS
NSC-012-G	AR500	WALL SECTION AND DETAILS
NSC-012-G	AR508	ROOF AND PARAPET DETAILS
NSC-012-G	AR514	ELEVATOR "A", NORTH - SOUTH SECTION
NSC-012-G	AR608	DEVICE INTEGRATION DETAILS
NSC-012-G	AR609	DEVICE INTEGRATION DETAILS
NSC-012-H	MC102	PARTIAL STREET LEVEL HVAC PLAN - WEST
NSC-012	EL002	ELECTRICAL SITE PLAN
NSC-012	EL004	STREET LEVEL LIGHTING PLAN - WEST
NSC-012	EL009	STREET LEVEL POWER PLAN - WEST
NSC-012	EL012	STREET LEVEL COMMUNICATIONS PLAN - WEST
NSC-012	EL013	MEZZANINE LEVEL COMMUNICATIONS PLAN - WEST
NSC-012	EL014	PLATFORM LEVEL COMMUNICATIONS PLAN - EAST
NSC-012	EL015	PLATFORM LEVEL COMMUNICATIONS PLAN - WEST
NSC-012	EL016	ELECTRICAL DIAGRAMS AND SCHEDULES
NSC-012	EL017	ELECTRICAL DIAGRAMS AND SCHEDULES
NSC-012	EL018	ELECTRICAL DIAGRAMS AND SCHEDULES
NSC-012	EL019	ELECTRICAL DETAILS
NSC-012	EL020	ELECTRICAL DETAILS
NSC-012	EL021	GROUNDING/LIGHTING PROTECTION PLAN
NSC-012	EL024	CONDUIT-RUN PLAN
NSC-012-C	SG107	PARTIAL PLATFORM LEVEL SIGN LOCATION PLAN
NSC-012-C	SG204	SIGN TYPES B+G - ELEVATION
NSC-012-C	SG301	SIGN DETAILS
NSC-012-C	SG302	SIGNAGE DETAILS
NSC-012-P	FP102	PARTIAL STREET LEVEL FIRE PROTECTION PLAN - WEST
NSC-012-P	PL102	PARTIAL STREET LEVEL PLUMBING PLAN - WEST
		STAGE 1 - GATEWAY CENTER STATION FINISH
CA-456P	M-027-0	PLATFORM LEVEL - WEST - FIRE SUPPRESSION
CA-456P	M-028-0	PLATFORM LEVEL - EAST - FIRE SUPPRESSION
CA-456P	M-029-0	PLATFORM LEVEL - NORTH - FIRE SUPPRESSION
CA-456-E	E-009-2	LIGHTING PLAN & SECTIONS
CA-456-E	E-	LIGHTING PLAN
CA-456-E	E-007-5	LIGHTING PLAN
CA-456-E	E-006-5	LIGHTING PLAN
CA-456-E	E-010-2	LIGHTING PLAN & SECTIONS
CA-456-E	E-003-2	LIGHTING PLAN
CA-456-E	E-004-6	LIGHTING PLAN
CA-456-E	E-005-4	LIGHTING PLAN

Gannett Fleming
Transit & Rail Systems

NO.	DATE	DESCRIPTION

REVISIONS

THE PREPARATION OF THIS DOCUMENT HAS BEEN FINANCED IN PART THROUGH A GRANT FROM THE FEDERAL TRANSIT ADMINISTRATION, U.S. DEPARTMENT OF TRANSPORTATION, UNDER THE URBAN MASS TRANSPORTATION ACT OF 1964, AS AMENDED, FOR THE PORT AUTHORITY OF ALLEGHENY COUNTY, PENNSYLVANIA.

COMMONWEALTH OF PENNSYLVANIA REGISTERED PROFESSIONAL MICHAEL T. MCNAMARA

SIGNATURE

DMJM HARRIS | AECOM
FOUR GATEWAY CENTER
20TH FLOOR
PITTSBURGH, PA. 15222

APPROVED DATE 4/28/08

DESIGNED	JC TRAUM
DRAWN	JC TRAUM
CHECKED	CD JONES
IN CHARGE	CD JONES
DATE	APR. 28, 2008
SCALE	NTS

PORT AUTHORITY OF ALLEGHENY COUNTY
PITTSBURGH PENNSYLVANIA

NORTH SHORE CONNECTOR
NSC TRAIN SYSTEM (SYSTEM-WIDE)
INDEX OF ALSO DRAWINGS FOR NSC CONTRACT INTERFACES
SHEET 4 OF 4

Port Authority

CONTRACT NO. NSC-009
DWG. NO. GN005A SHT.

INDEX OF ALSO DRAWINGS

CONTRACT NO.	DRAWING NO.	DRAWING TITLE
		OPERATION CONTROL CENTER (OCC)
LRS-98-05	CC0010	OCC Block Diagram
LRS-98-05-R	CC0208	PAAC OCC Network Diagram, Rack 4 Terminal Server Connections
LRS-98-05-R	CC0209	PAAC OCC Network Diagram, Rack 5 Terminal Server Connections
LRS-98-05	CC321	IDF 1st Floor to 2nd Floor Wiring (1 of 8)
LRS-98-05	CC322	IDF 1st Floor to 2nd Floor Wiring (2 of 8)
LRS-98-05	CC323	IDF 1st Floor to 2nd Floor Wiring (3 of 8)
LRS-98-05	CC324	IDF 1st Floor to 2nd Floor Wiring (4 of 8)
LRS-98-05	CC325	IDF 1st Floor to 2nd Floor Wiring (5 of 8)
LRS-98-05	CC326	IDF 1st Floor to 2nd Floor Wiring (6 of 8)
LRS-98-05	CC327	IDF 1st Floor to 2nd Floor Wiring (7 of 8)
LRS-98-05	CC328	IDF 1st Floor to 2nd Floor Wiring (8 of 8)
LRS-98-05	CC330	Terminal Server Wiring (1 of 4)
LRS-98-05	CC331	Terminal Server Wiring (2 of 4)
LRS-98-05	CC332	Terminal Server Wiring (3 of 4)
LRS-98-05	CC333	Terminal Server Wiring (4of 4)
LRS-98-05	CC340	Modem IDF Wiring (1 of 6)
LRS-98-05	CC341	Modem IDF Wiring (2 of 6)
LRS-98-05	CC342	Modem IDF Wiring (3 of 6)
LRS-98-05	CC343	Modem IDF Wiring (4 of 6)
LRS-98-05	CC344	Modem IDF Wiring (5 of 6)
LRS-98-05	CC345	Modem IDF Wiring (6 of 6)
LRS-98-05	CC350	Data IDF Wiring (1 of 7)
LRS-98-05	CC351	Data IDF Wiring (2 of 7)
LRS-98-05	CC352	Data IDF Wiring (3 of 7)
LRS-98-05	CC353	Data IDF Wiring (4 of 7)
LRS-98-05	CC354	Data IDF Wiring (5 of 7)
LRS-98-05	CC355	Data IDF Wiring (6 of 7)
LRS-98-05	CC356	Data IDF Wiring (7 of 7)
LRS-98-05	CC360	VCS IDF Wiring (1 of 8)
LRS-98-05	CC361	VCS IDF Wiring (2 of 8)
LRS-98-05	CC362	VCS IDF Wiring (3 of 8)
LRS-98-05	CC363	VCS IDF Wiring (4 of 8)
LRS-98-05	CC364	VCS IDF Wiring (5 of 8)
LRS-98-05	CC365	VCS IDF Wiring (6 of 8)
LRS-98-05	CC366	VCS IDF Wiring (7 of 8)
LRS-98-05	CC367	VCS IDF Wiring (8 of 8)
LRS-98-02-E	EL901	Ground Floor Power/Systems & Lighting Plan
LRS-98-02-E	EL902	Second Floor Power/Systems & Lighting Plan
LRS-98-02-E	EL903	Third Floor Power/Systems & Lighting Plan
LRS-98-02-E	EL905	Enlarged Plans & Details
LRS-98-02-E	EL906	Enlarged Plans & Details
LRS-98-02-E	EL907	Riser Diagrams, Notes and Schedules
LRS-98-02-E	EL908	Panelboard Schedules
LRS-98-02-E	EL909	Panelboard Schedules
LRS-98-02-E	EL910	Existing Panelboard Schedules
		STAGE 2 LIGHT RAIL TRANSIT SYSTEM FIBER NODES
LRT-006	FM-06-EC-119	System Design (Fiber Optic) By Node Locations.

CONTRACT NO.	DRAWING NO.	DRAWING TITLE

Gannett Fleming
Transit & Rail Systems

NO.	DATE	DESCRIPTION
		REVISIONS

THE PREPARATION OF THIS DOCUMENT HAS BEEN FINANCED IN PART THROUGH A GRANT FROM THE FEDERAL TRANSIT ADMINISTRATION, U.S. DEPARTMENT OF TRANSPORTATION, UNDER THE URBAN MASS TRANSPORTATION ACT OF 1964, AS AMENDED, FOR THE PORT AUTHORITY OF ALLEGHENY COUNTY, PENNSYLVANIA.

COMMONWEALTH OF PENNSYLVANIA — REGISTERED PROFESSIONAL — MICHAEL T. MCNAMARA — ENGINEER No. 37318-E

SIGNATURE

DMJM HARRIS | AECOM
FOUR GATEWAY CENTER
20TH FLOOR
PITTSBURGH, PA. 15222

APPROVED — DATE 4/28/08

DESIGNED	JC TRAUM
DRAWN	JC TRAUM
CHECKED	CD JONES
IN CHARGE	CD JONES
DATE	APR. 28, 2008
SCALE	NTS

PORT AUTHORITY OF ALLEGHENY COUNTY
PITTSBURGH — PENNSYLVANIA

NORTH SHORE CONNECTOR
NSC TRAIN SYSTEM (SYSTEM-WIDE)
INDEX OF ALSO DRAWINGS FOR NSC CONTRACT INTERFACES
SHEET 1 OF 5

Port Authority

CONTRACT NO. NSC-009
DWG. NO. GN006A
SHT.

INDEX OF DRAWINGS

NSC TRAIN SYSTEM (SYSTEM WIDE) - GATEWAY DOUBLE CROSSOVER

SHEET NO.	DRAWING NO.	DRAWING TITLE
1	GW100	TITLE SHEET
2	GW101	INDEX OF DRAWINGS (1 OF 1)
3	GW103	13'-0" CURVED SPLIT SWITCH
4	GW112	#6 DOUBLE CROSSOVER AT GATEWAY
5	GW120	SWITCH POINT / GUARD DETAIL
6	GW121	13'-0" SWITCH POINT DETAIL
7	GW122	HEEL BLOCK AREA AND SWITCH POINT DETAILS
8	GW123	115 RE RAIL STRAP GUARD X-SECTION
9	GW124	STRAP GUARD DRILLING AND FLARING DETAILS
10	GW125	#6 FROG DETAIL
11	GW126	HOUSE TOP DETAILS (1 OF 3)
12	GW127	HOUSE TOP DETAILS (2 OF 3)
13	GW128	HOUSE TOP DETAILS (3 OF 3)
14	GW129	FLOATING HEEL BLOCK / MANGANESE SWITCH POINT INSERT DETAILS (1 OF 2)
15	GW130	FLOATING HEEL BLOCK / MANGANESE SWITCH POINT INSERT DETAILS (2 OF 2)
16	GW140	TYPICAL M3 POWER SWITCH LAYOUT - DIRECT FIXATION (1 OF 2)
17	GW141	TYPICAL M3 POWER SWITCH LAYOUT - DIRECT FIXATION (2 OF 2)

SHEET NO.	DRAWING NO.	DRAWING TITLE

Gannett Fleming Transit & Rail Systems

NO.	DATE	DESCRIPTION

REVISIONS

THE PREPARATION OF THIS DOCUMENT HAS BEEN FINANCED IN PART THROUGH A GRANT FROM THE FEDERAL TRANSIT ADMINISTRATION, U.S. DEPARTMENT OF TRANSPORTATION, UNDER THE URBAN MASS TRANSPORTATION ACT OF 1964, AS AMENDED, FOR THE PORT AUTHORITY OF ALLEGHENY COUNTY, PENNSYLVANIA.

COMMONWEALTH OF PENNSYLVANIA PROFESSIONAL ENGINEER RICHARD CROSS IV

SIGNATURE

DMJM HARRIS | AECOM
FOUR GATEWAY CENTER
20TH FLOOR
PITTSBURGH, PA. 15222

APPROVED DATE

DESIGNED	JC TRAUM
DRAWN	JC TRAUM
CHECKED	BR SMITH
IN CHARGE	CD JONES
DATE	SEP. 13.2007
SCALE	NTS

PORT AUTHORITY OF ALLEGHENY COUNTY
PITTSBURGH PENNSYLVANIA

NORTH SHORE CONNECTOR
NSC TRAIN SYSTEM (SYSTEM WIDE)
GATEWAY DOUBLE CROSSOVER
INDEX OF DRAWINGS (1 OF 1)

Port Authority

CONTRACT NO. 3002
DWG. NO. GW101 SHT. 2

DATE: STIMES
FILE:

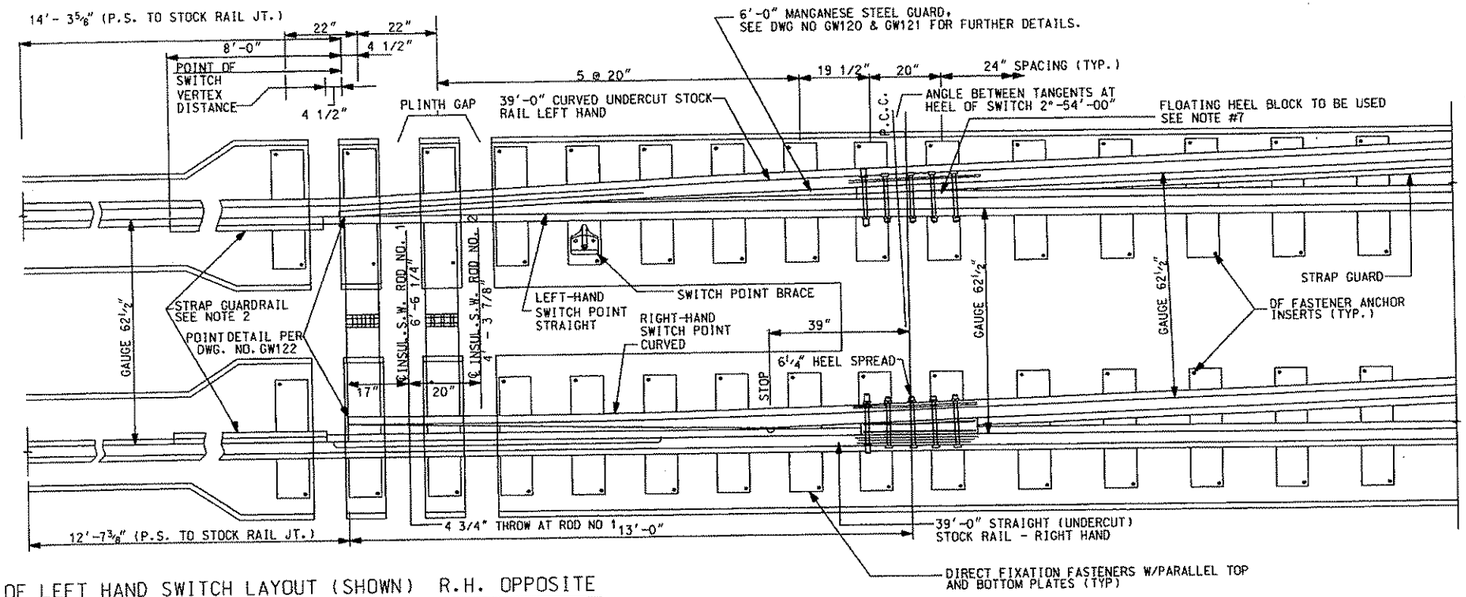

PLAN OF LEFT HAND SWITCH LAYOUT (SHOWN) R.H. OPPOSITE

N.T.S.

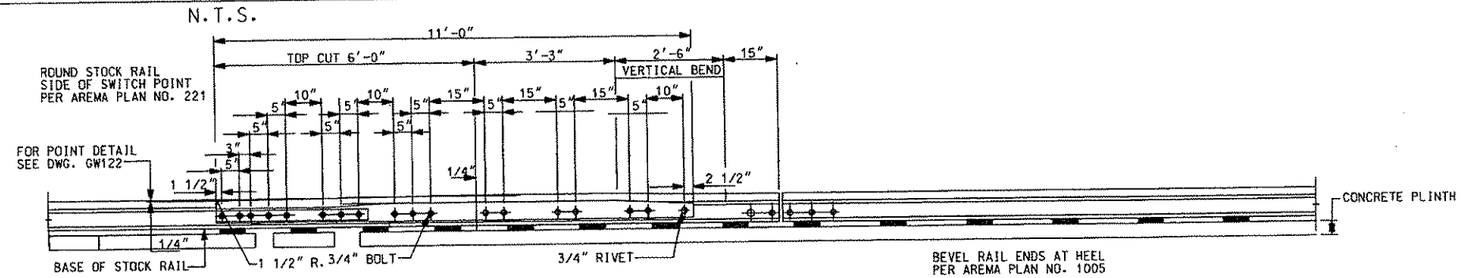

ELEVATION OF RIGHT HAND SWITCH POINT (2)

N.T.S.

BILL OF MATERIAL
13'-0" CURVED SPLIT SWITCH w / GRADUATED RISERS

NUMBER	DESCRIPTION
1	DOUBLE REINFORCED CURVED SWITCH POINTS COMPLETE, PLANING PER DRAWING GW121 AND AREMA PLAN NUMBER 221, STOPS PER DETAIL 1024 AREMA PLAN NUMBER 221 WITH VERTICAL DESIGN CLIPS
2	FLOATING HEEL BLOCK ASSEMBLIES TO BE PROVIDED, PER DRAWING GW129 AND GW130
1	REINFORCED STRAIGHT SWITCHPOINT WITH MANGANESE STEEL GUARD PER DRAWINGS GW120 & GW121 AND AREMA PLAN NO. 221 WITH VERTICAL CLIPS.
1	SWITCH POINT BRACE AS SHOWN ABOVE
1	INSULATED SWITCH ROD NUMBER 1, VERTICAL DESIGN
1	INSULATED SWITCH ROD NUMBER 2, VERTICAL DESIGN

NOTES:

1. STOCK RAILS SHALL BE UNDERCUT CONFORMING TO POINT DETAIL, SEE DRAWING GW122
2. FOR STRAP GUARD END FLARE DETAILS SEE DRAWING GW124 END OF STRAP GUARD SHALL BE AS CLOSE AS POSSIBLE TO THE POINT OF SWITCH WITHOUT INTERFERING WITH SWITCH MACHINE CONNECTING RODS AND POINT DETECTOR ROD. FURNISH TWO (2) PIECES OF STRAP GUARD AHEAD OF SWITCH POINT. LENGTH TO BE 5'-0" TO 7'-0".
3. SWITCH DESIGN & GEOMETRY APPLICABLE TO No. 6 TURNOUTS AND SHALL GENERALLY CONFORM TO AREMA PLAN NO. 921 (MODIFIED FOR GAGE)
4. RAIL SECTION SHALL BE 115 RE.
5. STRAP GUARD ON THE CURVED STOCK RAIL SHALL BE MACHINED AS NECESSARY THROUGH THE FLOATING HEEL BLOCK AREA SO AS TO PROVIDE CLEARANCE FOR THE STANDARD WHEEL CONTOUR. PER DRAWING GW123
6. ALL DIRECT FIXATION FASTENERS AND PLATES FOR SWITCHES SHALL BE DESIGNED AND FURNISHED AS PART OF TURNOUT AND CROSSOVER SET.
7. SWITCH TO BE PROVIDED WITH HOUSE TOP GUARDS, FLOATING HEEL BLOCKS, AND MANGANESE SWITCH POINT INSERTS.
8. CONTRACTOR TO COORDINATE WITH CONTRACT 009 POWER OPERATED SWITCH LAYOUT DRAWINGS.

Gannett Fleming Transit & Rail Systems

NO.	DATE	DESCRIPTION

REVISIONS

THE PREPARATION OF THIS DOCUMENT HAS BEEN FINANCED IN PART THROUGH A GRANT FROM THE FEDERAL TRANSIT ADMINISTRATION, U.S. DEPARTMENT OF TRANSPORTATION, UNDER THE URBAN MASS TRANSPORTATION ACT OF 1964, AS AMENDED. FOR THE PORT AUTHORITY OF ALLEGHENY COUNTY, PENNSYLVANIA.

COMMONWEALTH OF PENNSYLVANIA PROFESSIONAL ENGINEER RICHARD CROSS IV

SIGNATURE

DMJM HARRIS | AECOM
FOUR GATEWAY CENTER
20TH FLOOR
PITTSBURGH, PA. 15222

APPROVED DATE

DESIGNED	JF BARBIERE
DRAWN	JF BARBIERE
CHECKED	R CROSS
IN CHARGE	R CROSS
DATE	SEP. 13.2007
SCALE	N.T.S.

PORT AUTHORITY OF ALLEGHENY COUNTY
PITTSBURGH PENNSYLVANIA

NORTH SHORE CONNECTOR
NSC TRAIN SYSTEM (SYSTEM WIDE)
GATEWAY DOUBLE CROSSOVER
13'-0" CURVED SPLIT SWITCH

Port Authority

CONTRACT NO. 3002
DWG. NO. GW103 SHT. 3

$DATE$ $TIME$
$FILE$

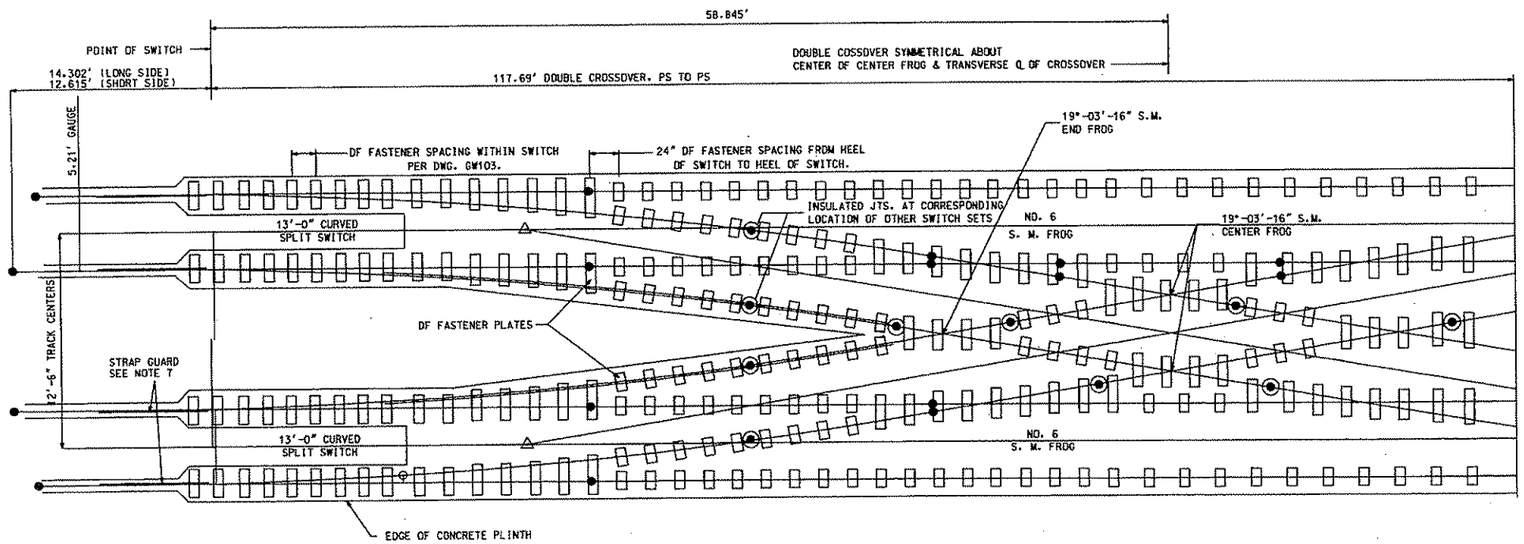

NOTE:
OF PLATE CONFIGURATION:
BETWEEN PS AND HEEL BLOCK (DRW. GW103)
BETWEEN HEEL BLOCKS OF OPPOSING SWITCHES - 24" SPACING

PLAN NO. 6 DOUBLE CROSSOVER
12'-6" TRACK CENTERS

NOT TO SCALE

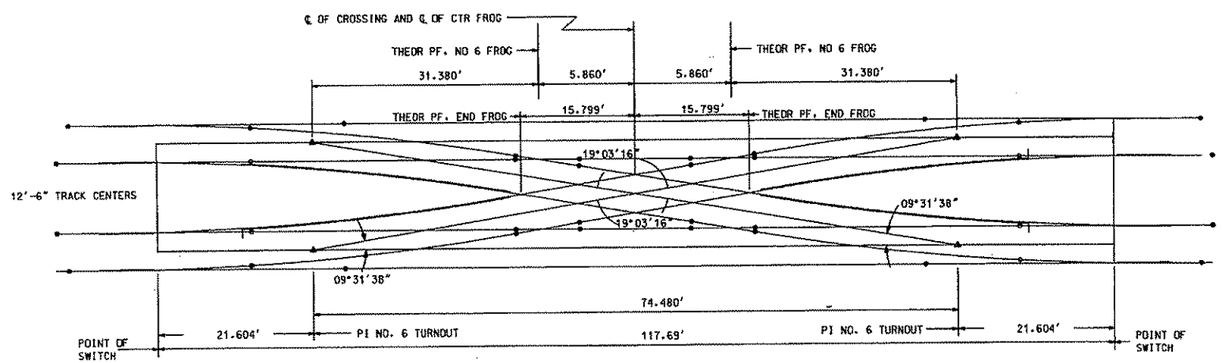

CROSSOVER LAYOUT DIAGRAM

NOT TO SCALE

LEGEND

- NEW 115 RE RAIL
- RUNNING RAIL WITH STRAP GUARD
- NON-INSULATED JOINTS (TYP.). MAY BE MODIFIED
- INSULATED JOINTS (MANDATORY)
- SWITCH POINT HEEL JOINTS
- S.M. SOLID MANGANESE

BILL OF TRACK MATERIAL	
CROSSOVER QUANTITY	DESCRIPTION
2	13'-0" INSULATED RIGHT HAND CURVED SPLIT SWITCH COMPLETE PER DRAWING GW103
2	13'-0" INSULATED LEFT HAND CURVED SPLIT SWITCH COMPLETE PER DRAWING GW103
4	NO 6 SOLID MANGANESE STEEL FROG COMPLETE PER DRAWING GW125
4	STRAIGHT STOCK RAIL PER DRAWINGS GW129
4	CURVED STOCK RAIL PER DRAWINGS GW129
12	RAIL (SHOP CURVED)
4	RAIL
8	STRAP GUARD (SHOP CURVED)
4	STRAP GUARD
8	PIECES OF STRAP GUARD SEE NOTE 7
2	END FROGS
2	CENTER FROGS
16	STANDARD JOINT COMPLETE
14	INSULATED JOINT COMPLETE (TOTAL QUANTITY)
4	INSULATED STRAP GUARD JT. COMPLETE (INCL. ABOVE)
1 SET	SPECIAL TRACKWORK DIRECT FIXATION PLATES,
	FASTENERS, GAUGE PLATES AND RAIL BRACES

CROSSOVER DATA		
CENTER FROG	NUMBER	N.A.
	ANGLE	19°-03'-16"
END FROG	NUMBER	N.A.
	ANGLE	19° 03' 16"

NOTES:

1. ALL RAILS SHOWN TO BE PROVIDED BY THE TRACKWORK MANUFACTURER.
2. 3/16" RAIL JOINT SHALL BE PROVIDED AT INSULATED JOINTS AND 1/8" AT NON-INSULATED JOINTS.
3. FLARE APPROACH ENDS OF STRAP GUARD RAILS AS SHOWN ON DWG. GW124, AND PER NOTE 2 ON GW103.
4. RAIL LENGTHS SHALL BE SUCH THAT THEY MAY BE HANDLED WITHOUT DAMAGE WITHIN THE CLOSE QUARTERS OF A TUNNEL INSTALLATION. ALL INSULATED JOINTS SHALL BE AT LOCATIONS SHOWN.
5. SPECIAL TRACKWORK DIRECT FIXATION FASTENERS SHALL BE PROVIDED FOR THE COMPLETE DOUBLE CROSSOVER UNIT AND SHALL BE FULLY VULCANIZED WITH GALVANIZED PANDROL CLIPS.
6. ALL SWITCHES OF CROSSOVER TO BE PROVIDED WITH HOUSE TOP GUARDS. FLOATING HEEL BLOCKS, AND MANGANESE SWITCH POINT INSERTS. SEE DRAWINGS GW126.-GW130.
7. PROVIDE 2 PIECES OF STRAP GUARD RAIL AHEAD OF POINT OF SWITCH. LENGTH TO BE 5'-0" TO 7'-0".

Gannett Fleming Transit & Rail Systems

NO.	DATE	DESCRIPTION

REVISIONS

THE PREPARATION OF THIS DOCUMENT HAS BEEN FINANCED IN PART THROUGH A GRANT FROM THE FEDERAL TRANSIT ADMINISTRATION, U.S. DEPARTMENT OF TRANSPORTATION, UNDER THE URBAN MASS TRANSPORTATION ACT OF 1964, AS AMENDED, FOR THE PORT AUTHORITY OF ALLEGHENY COUNTY, PENNSYLVANIA.

COMMONWEALTH OF PENNSYLVANIA
REGISTERED PROFESSIONAL
RICHARD CROSS IV
ENGINEER
SIGNATURE

DMJM HARRIS | AECOM
FOUR GATEWAY CENTER
20TH FLOOR
PITTSBURGH, PA. 15222

APPROVED DATE

DESIGNED	JF BARBIERE
DRAWN	JF BARBIERE
CHECKED	R CROSS
IN CHARGE	R CROSS
DATE	SEP. 13.2007
SCALE	N.T.S.

PORT AUTHORITY OF ALLEGHENY COUNTY
PITTSBURGH PENNSYLVANIA

NORTH SHORE CONNECTOR
NSC TRAIN SYSTEM (SYSTEM WIDE)
GATEWAY DOUBLE CROSSOVER
#6 DOUBLE CROSSOVER AT GATEWAY

Port Authority

CONTRACT NO. 3002
DWG. NO. GW112 SHT. 4

$DATE$ $TIME$
$FILE$

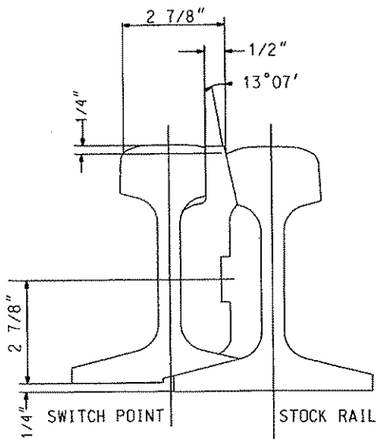

SECTION A GW121 NOT TO SCALE

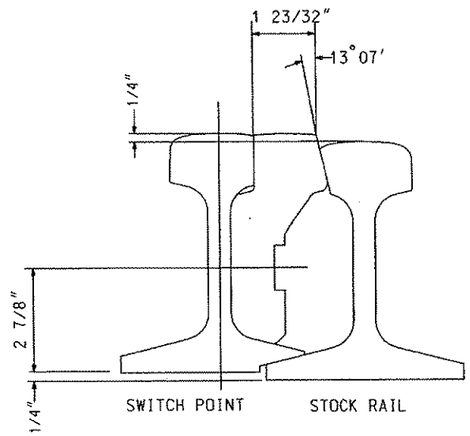

SECTION B GW121 NOT TO SCALE

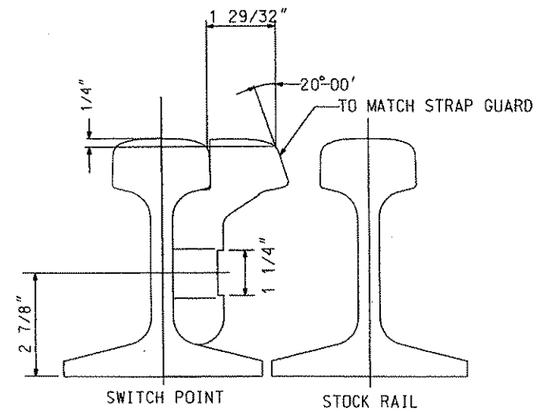

SECTION C GW121 NOT TO SCALE

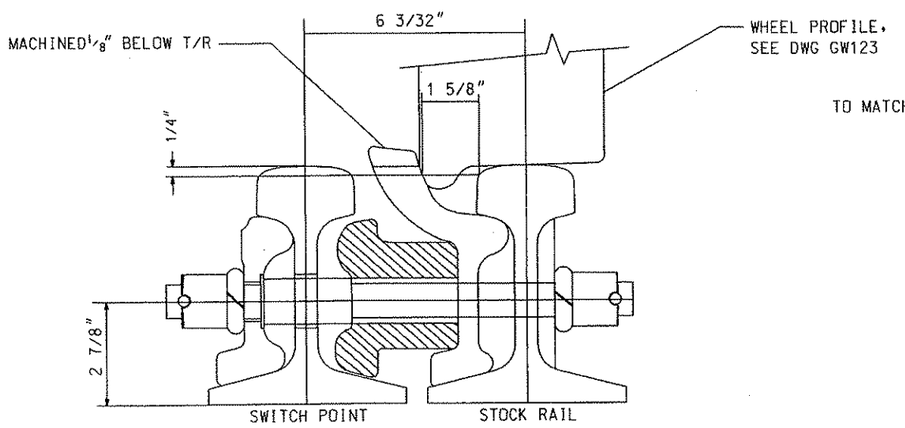

POINT OPEN

SECTION D GW121 NOT TO SCALE

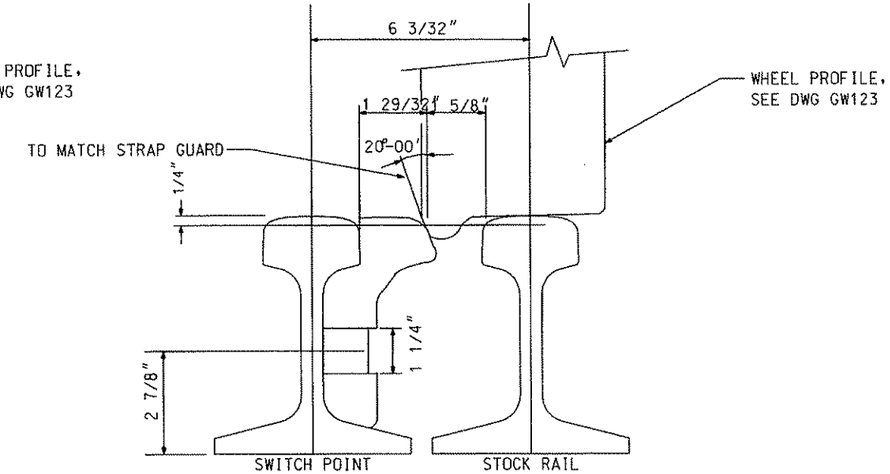

POINT OPEN

SECTION E GW121 NOT TO SCALE

POINT OPEN

Gannett Fleming Transit & Rail Systems

NO.	DATE	DESCRIPTION

REVISIONS

THE PREPARATION OF THIS DOCUMENT HAS BEEN FINANCED IN PART THROUGH A GRANT FROM THE FEDERAL TRANSIT ADMINISTRATION, U.S. DEPARTMENT OF TRANSPORTATION, UNDER THE URBAN MASS TRANSPORTATION ACT OF 1964, AS AMENDED. FOR THE PORT AUTHORITY OF ALLEGHENY COUNTY, PENNSYLVANIA.

COMMONWEALTH OF PENNSYLVANIA PROFESSIONAL ENGINEER RICHARD CROSS IV

SIGNATURE

DMJM HARRIS | AECOM

FOUR GATEWAY CENTER
20TH FLOOR
PITTSBURGH, PA. 15222

APPROVED DATE

DESIGNED JF BARBIERE
DRAWN JF BARBIERE
CHECKED R CROSS
IN CHARGE R CROSS
DATE SEP. 13,2007
SCALE N.T.S.

PORT AUTHORITY OF ALLEGHENY COUNTY
PITTSBURGH PENNSYLVANIA

NORTH SHORE CONNECTOR
NSC TRAIN SYSTEM (SYSTEM WIDE)
GATEWAY DOUBLE CROSSOVER
SWITCH POINT /GUARD DETAIL

Port Authority

CONTRACT NO. 3602
DWG. NO. GW120 SHT. 5

$DATE$ $TIME$
$FILE$

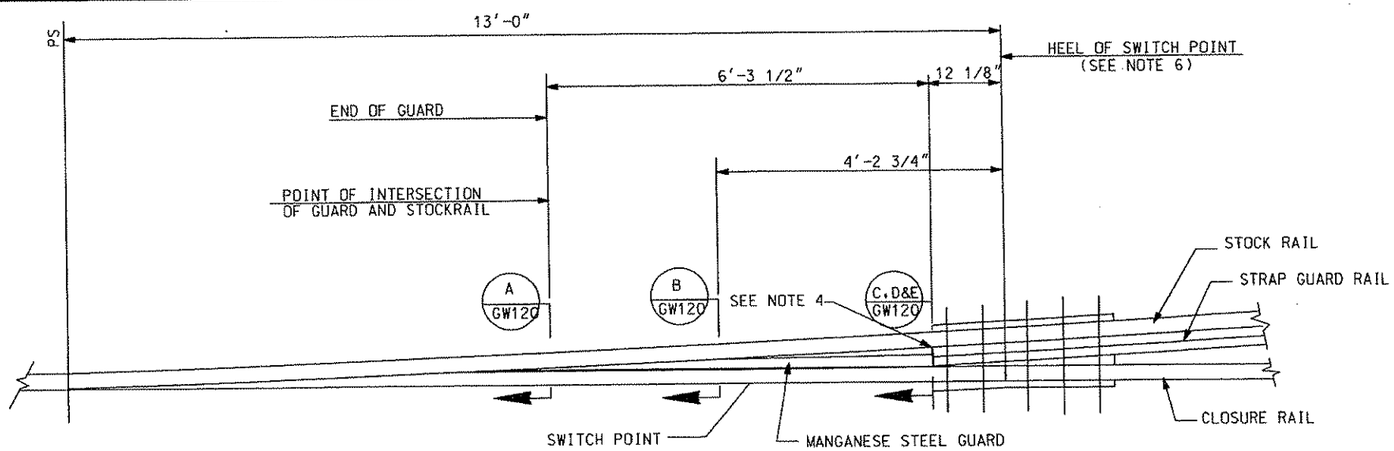

PLAN OF LEFT HAND STRAIGHT SWITCH POINT (1)

NOT TO SCALE

NOTES:

1. STOCK RAILS SHALL BE UNDERCUT CONFORMING TO POINT DETAIL. SEE DRAWING GW122.
2. FOR STRAP GUARD DETAILS SEE DRAWING GW124.
3. ALL RAIL TO BE 115LB RE
4. MAXIMUM GAP BETWEEN END OF GUARD AND STRAP GUARD RAIL SHALL BE 1/16" MIN. IN THE CLOSED SWITCH POINT POSITION.
5. STRAP GUARD ON THE CURVED STOCK RAIL SHALL BE MACHINED AS NECESSARY THROUGH THE FLOATING HEEL BLOCK AREA SO AS TO PROVIDE CLEARANCE FOR THE STANDARD WHEEL CONTOUR. PER DRAWING GW123.
6. SWITCH POINTS TO BE PROVIDED WITH HOUSE TOP GUARDS. FLOATING HEEL BLOCKS. AND MANGANESE SWITCH POINT INSERTS. SEE DRAWINGS GW126-GW130.

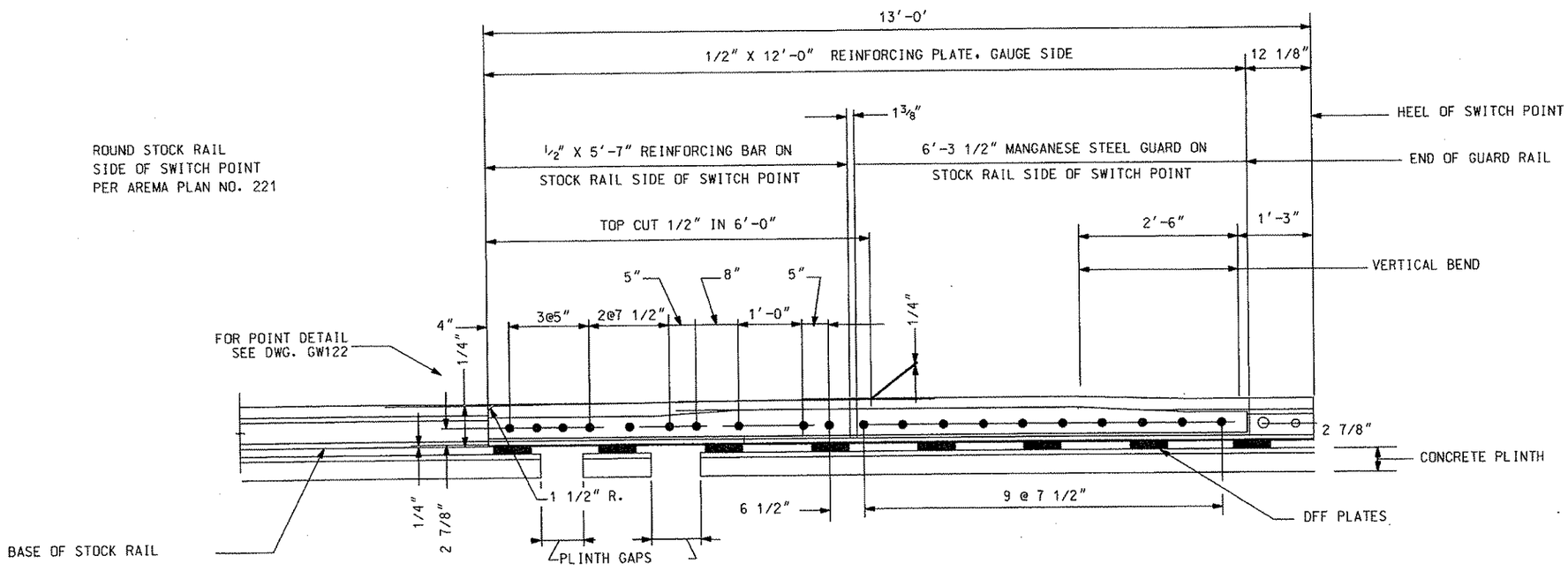

ELEVATION OF LEFT (STRAIGHT) SWITCH POINT (2)

NOT TO SCALE

Gannett Fleming Transit & Rail Systems

NO.	DATE	DESCRIPTION

REVISIONS

THE PREPARATION OF THIS DOCUMENT HAS BEEN FINANCED IN PART THROUGH A GRANT FROM THE FEDERAL TRANSIT ADMINISTRATION, U.S. DEPARTMENT OF TRANSPORTATION, UNDER THE URBAN MASS TRANSPORTATION ACT OF 1964, AS AMENDED, FOR THE PORT AUTHORITY OF ALLEGHENY COUNTY, PENNSYLVANIA.

COMMONWEALTH OF PENNSYLVANIA PROFESSIONAL ENGINEER RICHARD CROSS IV

SIGNATURE

DMJM HARRIS | AECOM

FOUR GATEWAY CENTER
20TH FLOOR
PITTSBURGH, PA. 15222

APPROVED DATE

DESIGNED	JF BARBIERE
DRAWN	JF BARBIERE
CHECKED	R CROSS
IN CHARGE	R CROSS
DATE	SEP. 13,2007
SCALE	N.T.S.

PORT AUTHORITY OF ALLEGHENY COUNTY
PITTSBURGH PENNSYLVANIA

NORTH SHORE CONNECTOR
NSC TRAIN SYSTEM. (SYSTEM WIDE)
GATEWAY DOUBLE CROSSOVER
13'-0" SWITCH POINT DETAIL

Port Authority

CONTRACT NO. 3002
DWG. NO. GW121 SHT. 6

$DATE$ $TIME$
$FILE$

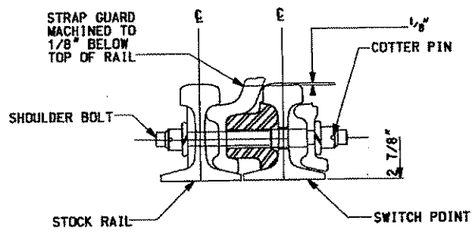

HEEL BLOCK AREA

FLOATING HEEL BLOCK TO BE USED - NOT BOLTED HEEL BLOCK AS SHOWN
SEE DRAWING GW129 & GW130
NOT TO SCALE

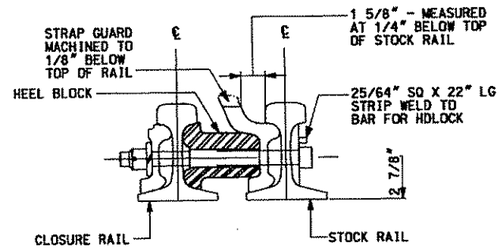

HEEL BLOCK AREA

FLOATING HEEL BLOCK TO BE USED - NOT BOLTED HEEL BLOCK AS SHOWN
SEE DRAWING GW129 & GW130
NOT TO SCALE

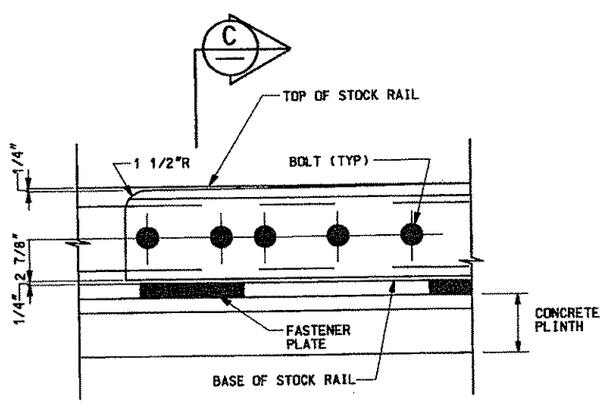

POINT DETAIL (2 / GW121)

NOT TO SCALE

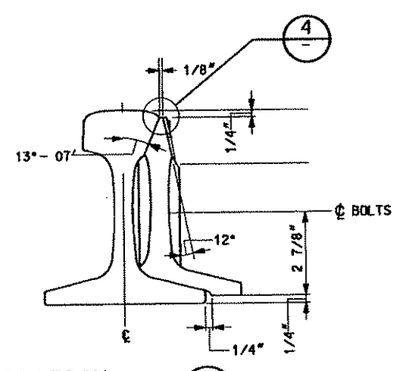

SECTION (C)

NOT TO SCALE

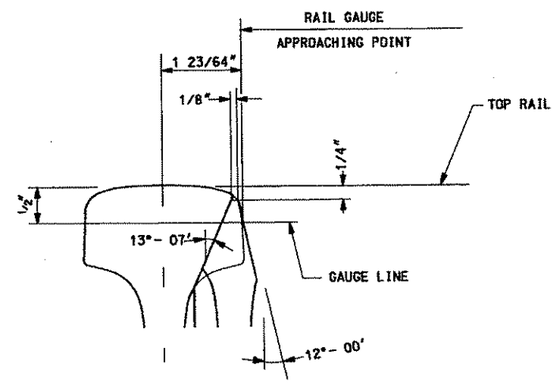

DETAIL (4)

NOT TO SCALE

NOTES:

1. A MARKER PLATE SHALL BE PLACED ON THE GAGE SIDE OF BOTH SWITCH POINTS NEAR THE HEEL BLOCK END IN RAISED DEEPLY CUT CHARACTERS TO INDICATE PAAC. MFR. SWITCH POINT LENGTH. CURVED OR STRAIGHT. RAIL SECTION AND DATE.
2. SEE LATEST REVISION AREMA PLAN NUMBER 221 FOR FURTHER DETAILS.
3. SEE DRAWING GW123 FOR WHEEL PROFILE AND STRAP GUARD RAIL.
4. ALL SHARP EDGES SHALL BE REMOVED FROM GROUND PLANES AND HOLES ON ALL SWITCH COMPONENTS.

Gannett Fleming Transit & Rail Systems

NO.	DATE	DESCRIPTION

REVISIONS

THE PREPARATION OF THIS DOCUMENT HAS BEEN FINANCED IN PART THROUGH A GRANT FROM THE FEDERAL TRANSIT ADMINISTRATION, U.S. DEPARTMENT OF TRANSPORTATION, UNDER THE URBAN MASS TRANSPORTATION ACT OF 1964, AS AMENDED, FOR THE PORT AUTHORITY OF ALLEGHENY COUNTY, PENNSYLVANIA.

COMMONWEALTH OF PENNSYLVANIA PROFESSIONAL ENGINEER RICHARD CROSS IV ENGINEER NO. 047703-E

SIGNATURE

DMJM HARRIS | AECOM
FOUR GATEWAY CENTER
20TH FLOOR
PITTSBURGH, PA. 15222

APPROVED DATE

DESIGNED	JF BARBIERE
DRAWN	JF BARBIERE
CHECKED	R CROSS
IN CHARGE	R CROSS
DATE	SEP. 13.2007
SCALE	N.T.S.

PORT AUTHORITY OF ALLEGHENY COUNTY
PITTSBURGH PENNSYLVANIA

NORTH SHORE CONNECTOR
NSC TRAIN SYSTEM (SYSTEM WIDE)
GATEWAY DOUBLE CROSSOVER
HEEL BLOCK AREA AND SWITCH POINT DETAILS

Port Authority

CONTRACT NO. 3002
DWG. NO. GW122 SHT. 7

$DATE$ $TIME$
$FILE$

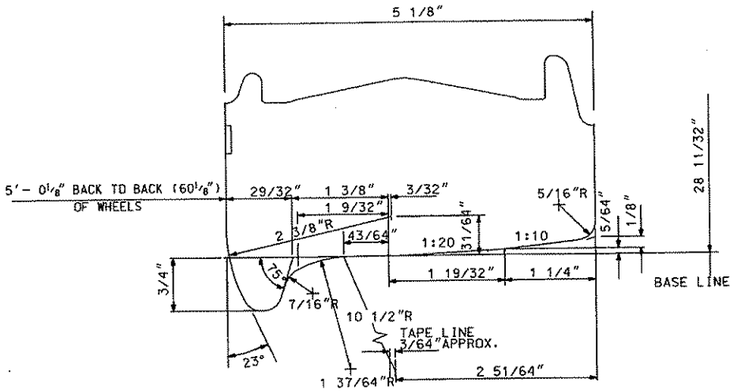

MODIFIED LRV WHEEL PROFILE

NOT TO SCALE

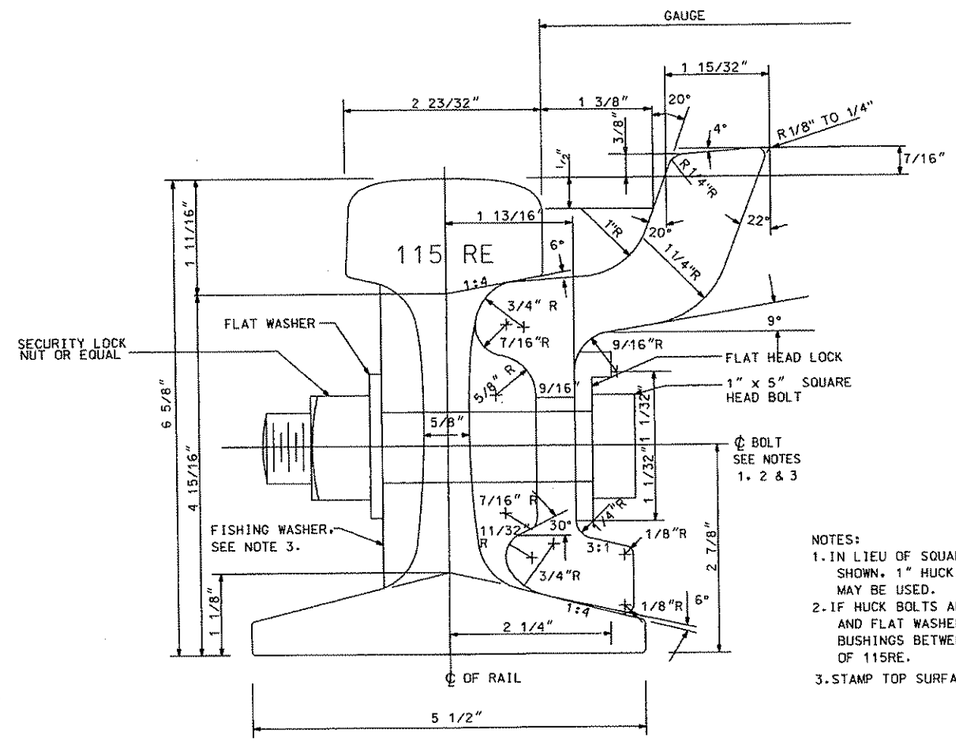

115 RE RAIL WITH STRAP GUARD

NOT TO SCALE

NOTES:

1. IN LIEU OF SQUARE HEAD BOLTING ARRANGEMENT SHOWN, 1" HUCK BOLTS (OR AN APPROVED EQUAL) MAY BE USED.
2. IF HUCK BOLTS ARE USED, ELIMINATE FLAT LOCK AND FLAT WASHER SHOWN, AND PROVIDE 1 11/16" O.D. CONTOURED BUSHINGS BETWEEN WEB OF STRAP GUARD RAIL AND WEB OF 115RE.
3. STAMP TOP SURFACE OF FISHING WASHER WITH A "T".

Gannett Fleming Transit & Rail Systems

NO.	DATE	DESCRIPTION

REVISIONS

THE PREPARATION OF THIS DOCUMENT HAS BEEN FINANCED IN PART THROUGH A GRANT FROM THE FEDERAL TRANSIT ADMINISTRATION, U.S. DEPARTMENT OF TRANSPORTATION, UNDER THE URBAN MASS TRANSPORTATION ACT OF 1964, AS AMENDED, FOR THE PORT AUTHORITY OF ALLEGHENY COUNTY, PENNSYLVANIA.

COMMONWEALTH OF PENNSYLVANIA
PROFESSIONAL
RICHARD CROSS IV
ENGINEER
No. 047525-E

SIGNATURE

DMJM HARRIS | AECOM
FOUR GATEWAY CENTER
20TH FLOOR
PITTSBURGH, PA. 15222

APPROVED DATE

DESIGNED	JF BARBIERE
DRAWN	JF BARBIERE
CHECKED	R CROSS
IN CHARGE	R CROSS
DATE	SEP. 13,2007
SCALE	N.T.S.

PORT AUTHORITY OF ALLEGHENY COUNTY
PITTSBURGH PENNSYLVANIA

NORTH SHORE CONNECTOR
NSC TRAIN SYSTEM (SYSTEM WIDE)
GATEWAY DOUBLE CROSSOVER
115 RE RAIL STRAP GUARD X-SECTION

Port Authority

CONTRACT NO. 2002
DWG. NO. GW123 SHT. 8

$DATE$ $TIME$
$FILE$

NOTES:

1. STRAP GUARD AND WASHER SHALL BE PUNCHED TO ACCEPT BOLTS AS SHOWN. NUTS MUST ALWAYS BE ON FIELD SIDE OF THE RUNNING RAIL. PUNCHING FOR BOLTS SHALL BE IN ACCORDANCE WITH DRAWING BELOW REGARDLESS OF RADIUS OF CURVE.
2. STRAP GUARD SHALL BE FLARED AT THE APPROACH ENDS AS SHOWN FOR DISTANCE OF 12".
3. FLANGE WIDTH MAY VARY. INCREASES FROM THE MINIMUM . STANDARD 1 5/8". SHALL BE MADE BY GRINDING THE FACE OF THE STRAP GUARD.
4. FLANGEWAY DIMENSIONS DESIGNED TO ACCOMMODATE VEHICLE WHEEL CONTOUR ON DRAWING GW123
5. GRIND RUNNING RAIL WELDS TO MATE WITH STRAP GUARDRAIL.
6. STRAP GUARD BOLT SPACING BETWEEN JOINT BOLTS SHALL BE APPROXIMATELY EQUAL.
7. SHORT LENGTHS OF STRAP GUARD RAIL SHALL BE AVOIDED. IN NO CASE SHALL LENGTHS SHORTER THAN 9.84' BE USED UNLESS INDICATED ON THE PLANS.
8. STRAP GUARD RAIL SHALL BE BOLTED TO 115RE AS INDICATED ON DRAWING GW123.

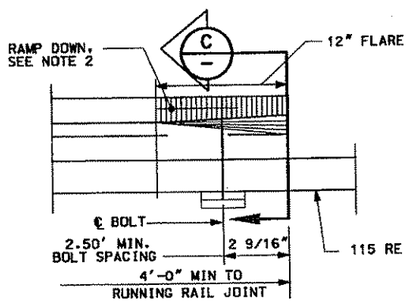

STRAP GUARD END FLARE DETAIL (2)
NOT TO SCALE

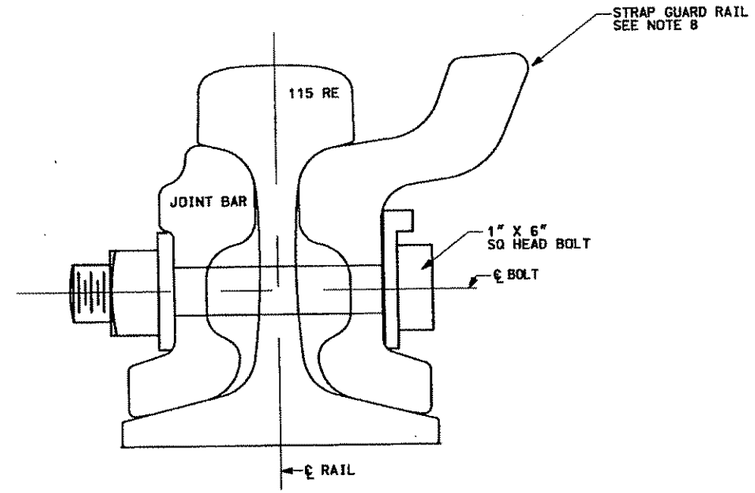

SECTION (A)
NOT TO SCALE

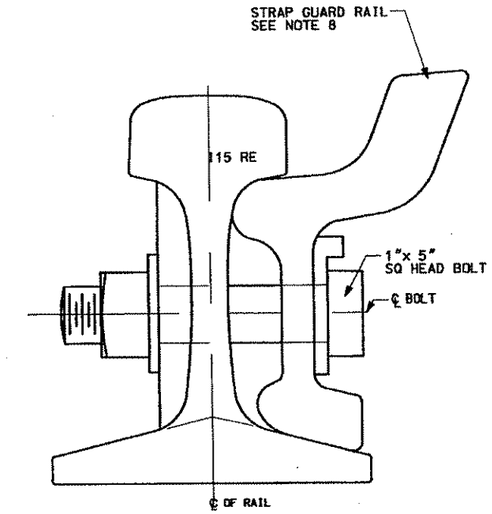

SECTION (B)
NOT TO SCALE

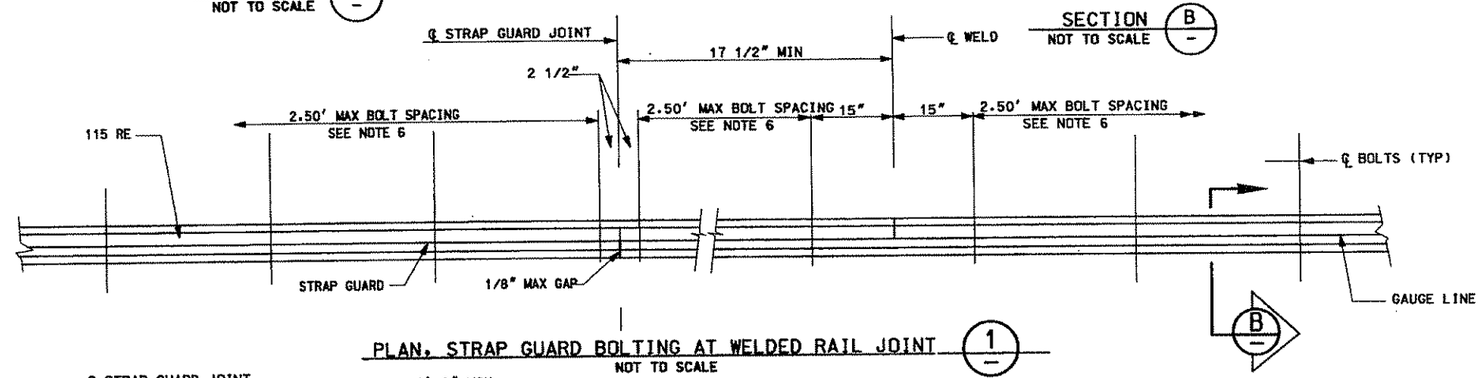

PLAN, STRAP GUARD BOLTING AT WELDED RAIL JOINT (1)
NOT TO SCALE

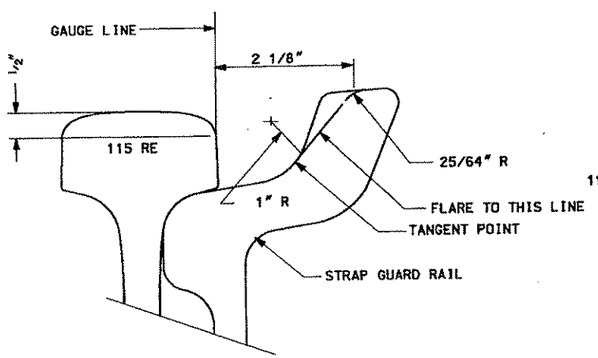

SECTION (C)
NOT TO SCALE

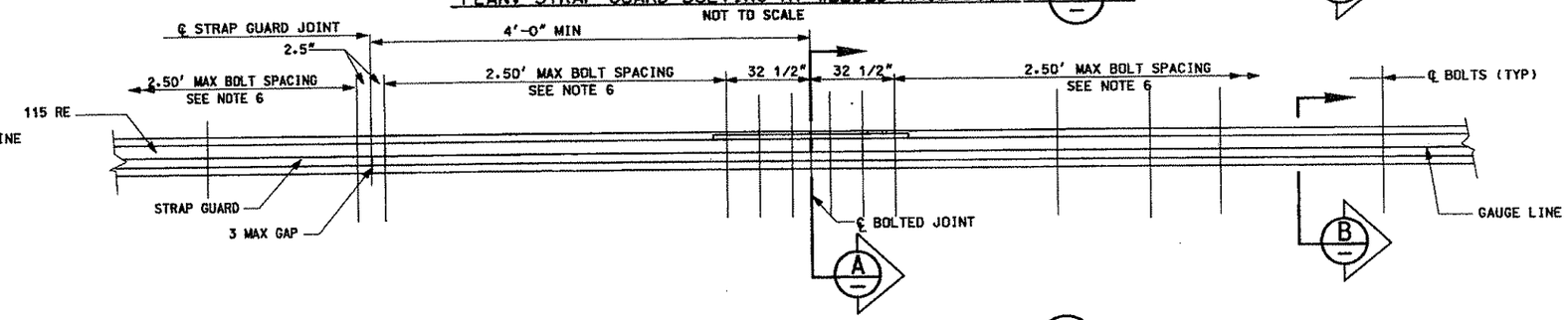

PLAN, STRAP GUARD BOLTING AT BOLTED RAIL JOINT (2)
NOT TO SCALE

Gannett Fleming Transit & Rail Systems

NO.	DATE	DESCRIPTION

REVISIONS

THE PREPARATION OF THIS DOCUMENT HAS BEEN FINANCED IN PART THROUGH A GRANT FROM THE FEDERAL TRANSIT ADMINISTRATION, U.S. DEPARTMENT OF TRANSPORTATION, UNDER THE URBAN MASS TRANSPORTATION ACT OF 1964, AS AMENDED, FOR THE PORT AUTHORITY OF ALLEGHENY COUNTY, PENNSYLVANIA.

COMMONWEALTH OF PENNSYLVANIA — PROFESSIONAL — RICHARD CROSS IV — ENGINEER — NO. 047763-E

SIGNATURE

DMJM HARRIS | AECOM
FOUR GATEWAY CENTER
20TH FLOOR
PITTSBURGH, PA. 15222

APPROVED DATE

DESIGNED	JF BARBIERE
DRAWN	JF BARBIERE
CHECKED	R CROSS
IN CHARGE	R CROSS
DATE	SEP. 13.2007
SCALE	N.T.S.

PORT AUTHORITY OF ALLEGHENY COUNTY
PITTSBURGH PENNSYLVANIA

NORTH SHORE CONNECTOR
NSC TRAIN SYSTEM (SYSTEM WIDE)
GATEWAY DOUBLE CROSSOVER
STRAP GUARD DRILLING AND FLARING DETAILS

Port Authority

CONTRACT NO. 2002
DWG. NO. GW124 SHT. 9

$DATE$ $TIME$
$FILE$

NOTES:

1. RAIL AND OTHER TRACK MATERIAL SHALL CONFORM TO 115 RE SECTION. TOE JOINT SHALL MATCH STANDARD 4 HOLE DRILLING. HEEL JOINT SHALL MATCH STANDARD 4 HOLE DRILLING.
2. FOR ADDITIONAL DETAIL OF SOLID MANGANESE FROGS REFER TO AREMA PLAN NO. 671. LENGTHS MODIFIED AS SHOWN.
3. FROG NUMBER, CONNECTING RAIL SECTION, PAAC, MANUFACTURER'S NAME AND YEAR OF MANUFACTURE TO BE CAST ON HEEL EXTENSION AS SHOWN.
4. SPREADS AND ARM LENGTHS GIVEN FROM 1/2" POINT OF FROG.
5. REMOVE ALL SHARP EDGES FROM ALL CASTINGS AND HOLES.
6. RIBS AND OTHER STIFFENING ELEMENTS SHALL BE DESIGNED BY THE FROG MANUFACTURER AND SHALL BE AT LEAST EQUAL TO THOSE SHOWN ON AREMA PLAN NO. 671.
7. DIRECT FIXATION PLATES AND FASTENERS FOR FROGS SHALL BE DESIGNED AND FURNISHED AS PART OF TURNOUT AND CROSSOVER SETS.

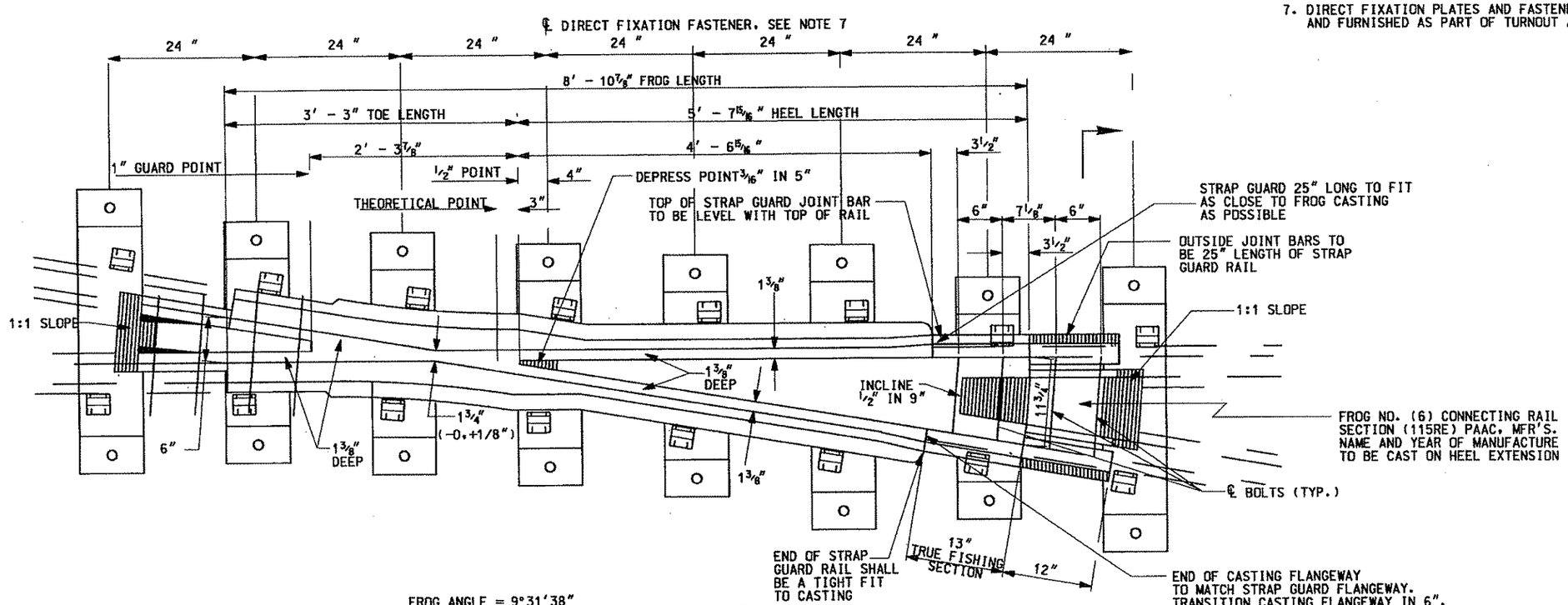

FROG ANGLE = 9°31'38"

NO. 6 SOLID MANGANESE STEEL FROG DETAIL (1 / GW112)

NOT TO SCALE

Gannett Fleming Transit & Rail Systems

NO.	DATE	DESCRIPTION

REVISIONS

THE PREPARATION OF THIS DOCUMENT HAS BEEN FINANCED IN PART THROUGH A GRANT FROM THE FEDERAL TRANSIT ADMINISTRATION, U.S. DEPARTMENT OF TRANSPORTATION, UNDER THE URBAN MASS TRANSPORTATION ACT OF 1964, AS AMENDED. FOR THE PORT AUTHORITY OF ALLEGHENY COUNTY, PENNSYLVANIA.

COMMONWEALTH OF PENNSYLVANIA — REGISTERED PROFESSIONAL — RICHARD CROSS IV — ENGINEER — NO. 047763-E

SIGNATURE

DMJM HARRIS | AECOM
FOUR GATEWAY CENTER
20TH FLOOR
PITTSBURGH, PA. 15222

APPROVED DATE

DESIGNED	JF BARBIERE
DRAWN	JF BARBIERE
CHECKED	R CROSS
IN CHARGE	R CROSS
DATE	SEP. 13.2007
SCALE	N.T.S.

PORT AUTHORITY OF ALLEGHENY COUNTY
PITTSBURGH PENNSYLVANIA

NORTH SHORE CONNECTOR
NSC TRAIN SYSTEM (SYSTEM WIDE)
GATEWAY DOUBLE CROSSOVER
#6 FROG DETAIL

Port Authority

CONTRACT NO. 3002
DWG. NO. GW125 SHT. 10

$DATE$ $TIME$
$FILE$

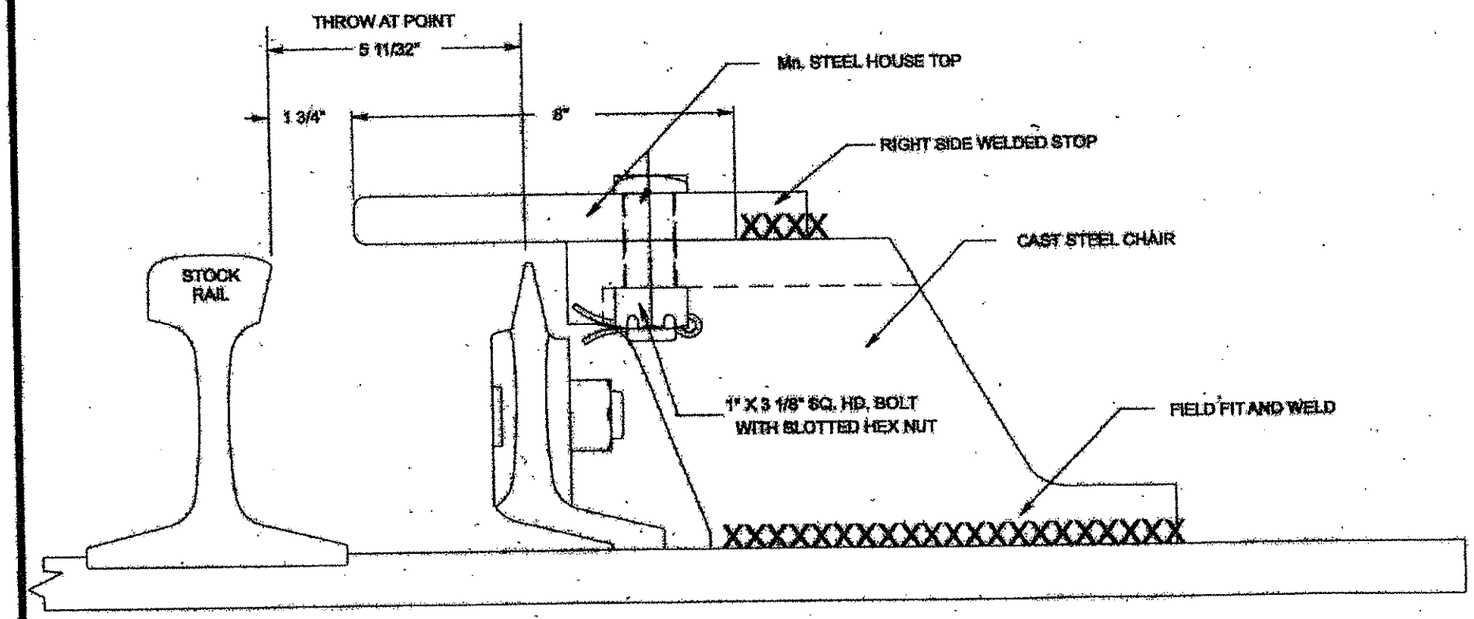

DETAIL OF HOUSE TOP AND CHAIR AT POINT OF SWITCH

NO.	DATE	DESCRIPTION

REVISIONS

THE PREPARATION OF THIS DRAWING HAS BEEN FINANCED IN PART THROUGH A GRANT FROM THE U.S. DEPARTMENT OF TRANSPORTATION, FEDERAL TRANSIT ADMINISTRATION UNDER THE URBAN MASS TRANSPORTATION ACT OF 1964, AS AMENDED.

APPROVED

PORT AUTHORITY

PORT AUTHORITY OF ALLEGHENY COUNTY
PITTSBURGH TECHNICAL SUPPORT DEPARTMENT PENNSYLVANIA

HOUSETOP AT POINT OF SWITCH ASSEMBLY

DRAWN BY
CHECKED BY
DATE
SCALE
DWG. NO.
CONTRACT NO.
SHT. 11

...\housetop-sw point assy.dgn 03/31/2005 06:16:53 AM

NOTES:

1. HOUSE TOP DETAIL SHOWN IS FOR GENERAL INFORMATION ONLY. ACTUAL DIMENSIONS TO BE DESIGNED TO FIT SWITCH SIZE AND SPACING OF LAYOUT. ALL WELDING TO BE DONE BEFORE VULCANIZING OF PLATE.

Gannett Fleming Transit & Rail Systems

NO.	DATE	DESCRIPTION

REVISIONS

THE PREPARATION OF THIS DOCUMENT HAS BEEN FINANCED IN PART THROUGH A GRANT FROM THE FEDERAL TRANSIT ADMINISTRATION, U.S. DEPARTMENT OF TRANSPORTATION, UNDER THE URBAN MASS TRANSPORTATION ACT OF 1964, AS AMENDED, FOR THE PORT AUTHORITY OF ALLEGHENY COUNTY, PENNSYLVANIA.

COMMONWEALTH OF PENNSYLVANIA PROFESSIONAL ENGINEER RICHARD CROSS IV

SIGNATURE

DMJM HARRIS | AECOM
FOUR GATEWAY CENTER
20TH FLOOR
PITTSBURGH, PA. 15222

APPROVED DATE

DESIGNED	JF BARBIERE
DRAWN	JF BARBIERE
CHECKED	BR SMITH
IN CHARGE	R CROSS
DATE	SEP. 13.2007
SCALE	N.T.S.

PORT AUTHORITY OF ALLEGHENY COUNTY
PITTSBURGH PENNSYLVANIA

NORTH SHORE CONNECTOR
NSC TRAIN SYSTEM (SYSTEM WIDE)
GATEWAY DOUBLE CROSSOVER
HOUSE TOP DETAILS (1 OF 3)

Port Authority

CONTRACT NO. 3002
DWG. NO. GW125 SHT. 11

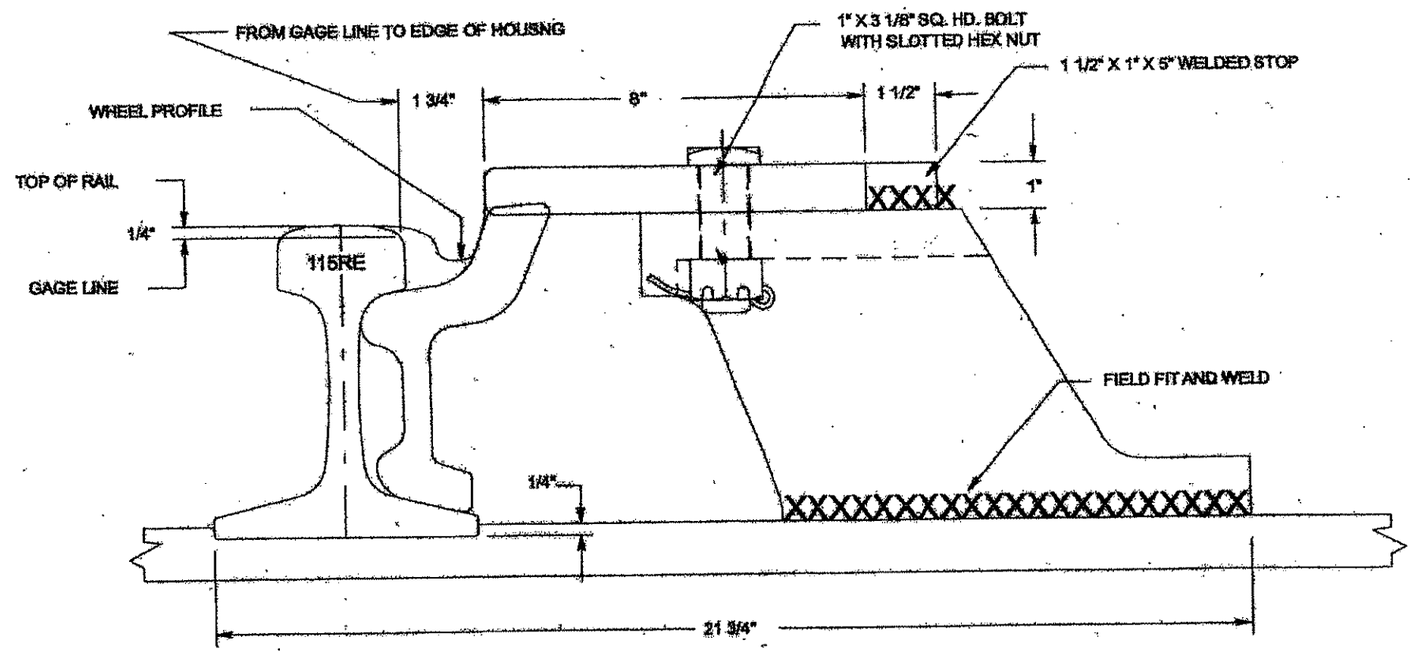

DETAIL WHERE HOUSE TOP MEETS STRAP GUARD

NO.	DATE	DESCRIPTION
		REVISIONS

THE PREPARATION OF THIS DRAWING HAS BEEN FINANCED, IN PART, THROUGH A GRANT FROM THE U.S. DEPARTMENT OF TRANSPORTATION, "URBAN MASS TRANSPORTATION ACT OF 1964, AS AMENDED."

APPROVED

DATE

PORT AUTHORITY

PORT AUTHORITY OF ALLEGHENY COUNTY
PITTSBURGH TECHNICAL SUPPORT DEPARTMENT PENNSYLVANIA

HOUSETOP TO STRAP GUARD ASSEMBLY

REF. DWG. NO.: 123.5.7.03.0.0.2

CONTRACT NO.

FILE NAME: housetop-strap-gd.dgn

DWG. NO.

SHT. 1

..\housetop-strap-gd.dgn 09/11/2006 08:01:43 AM

NOTES:

1. HOUSE TOP DETAIL SHOWN IS FOR GENERAL INFORMATION ONLY. ACTUAL DIMENSIONS TO BE DESIGNED TO FIT SWITCH SIZE AND SPACING OF LAYOUT. ALL WELDING TO BE DONE BEFORE VULCANIZING PLATE.

Gannett Fleming
Transit & Rail Systems

NO.	DATE	DESCRIPTION
		REVISIONS

THE PREPARATION OF THIS DOCUMENT HAS BEEN FINANCED IN PART THROUGH A GRANT FROM THE FEDERAL TRANSIT ADMINISTRATION, U.S. DEPARTMENT OF TRANSPORTATION, UNDER THE URBAN MASS TRANSPORTATION ACT OF 1964, AS AMENDED, FOR THE PORT AUTHORITY OF ALLEGHENY COUNTY, PENNSYLVANIA.

COMMONWEALTH OF PENNSYLVANIA
PROFESSIONAL
RICHARD CROSS IV
ENGINEER
SIGNATURE

DMJM HARRIS | AECOM
FOUR GATEWAY CENTER
20TH FLOOR
PITTSBURGH, PA. 15222

APPROVED DATE

DESIGNED	JF BARBIERE
DRAWN	JF BARBIERE
CHECKED	BR SMITH
IN CHARGE	R CROSS
DATE	SEP. 13.2007
SCALE	N.T.S.

PORT AUTHORITY OF ALLEGHENY COUNTY
PITTSBURGH PENNSYLVANIA

NORTH SHORE CONNECTOR
NSC TRAIN SYSTEM (SYSTEM WIDE)
GATEWAY DOUBLE CROSSOVER
HOUSE TOP DETAILS (2 OF 3)

Port Authority

CONTRACT NO. 3002

DWG. NO. GW127 SHT. 12

$DATE$ $TIME$
$FILE$

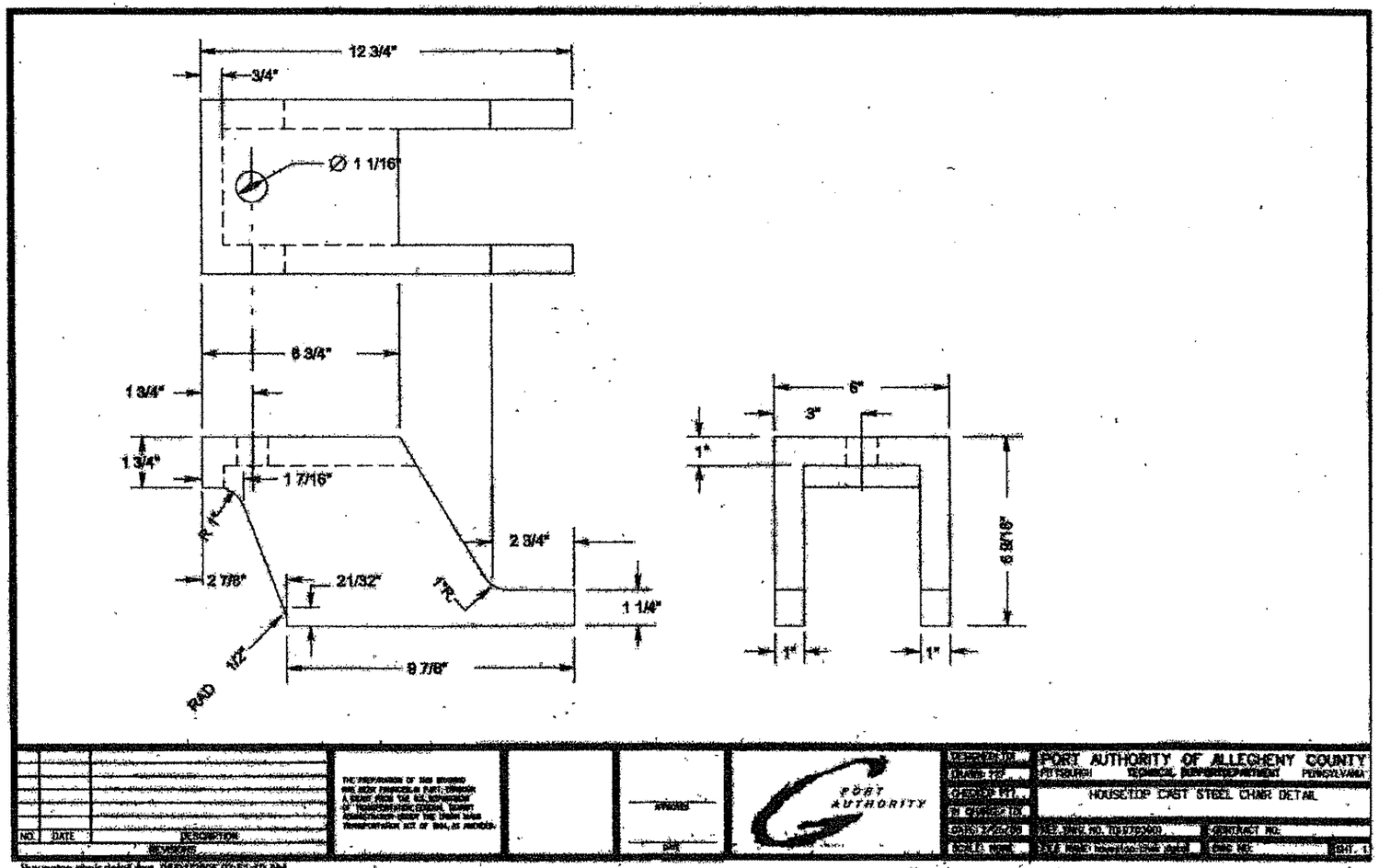

...\housetop-chair detail.dgn 03/07/2006 07:51:10 AM

NOTES:

1. HOUSE TOP DETAIL SHOWN IS FOR GENERAL INFORMATION ONLY. ACTUAL DIMENSIONS TO BE DESIGNED TO FIT SWITCH SIZE AND SPACING OF LAYOUT. GAGE PT. TO BE ½" BELOW TOP OF RAIL.

Gannett Fleming
Transit & Rail Systems

NO.	DATE	DESCRIPTION

REVISIONS

THE PREPARATION OF THIS DOCUMENT HAS BEEN FINANCED IN PART THROUGH A GRANT FROM THE FEDERAL TRANSIT ADMINISTRATION, U.S. DEPARTMENT OF TRANSPORTATION, UNDER THE URBAN MASS TRANSPORTATION ACT OF 1964, AS AMENDED. FOR THE PORT AUTHORITY OF ALLEGHENY COUNTY, PENNSYLVANIA.

COMMONWEALTH OF PENNSYLVANIA
REGISTERED PROFESSIONAL
RICHARD CROSS IV
ENGINEER
SIGNATURE

DMJM HARRIS | AECOM
FOUR GATEWAY CENTER
20TH FLOOR
PITTSBURGH, PA. 15222

APPROVED DATE

DESIGNED	JF BARBIERE
DRAWN	JF BARBIERE
CHECKED	BR SMITH
IN CHARGE	R CROSS
DATE	SEP. 13.2007
SCALE	N.T.S.

PORT AUTHORITY OF ALLEGHENY COUNTY
PITTSBURGH PENNSYLVANIA

NORTH SHORE CONNECTOR
NSC TRAIN SYSTEM (SYSTEM WIDE)
GATEWAY DOUBLE CROSSOVER
HOUSE TOP DETAILS (3 OF 3)

Port Authority

CONTRACT NO. 3002
DWG. NO. GW128 SHT. 13

REVISIONS

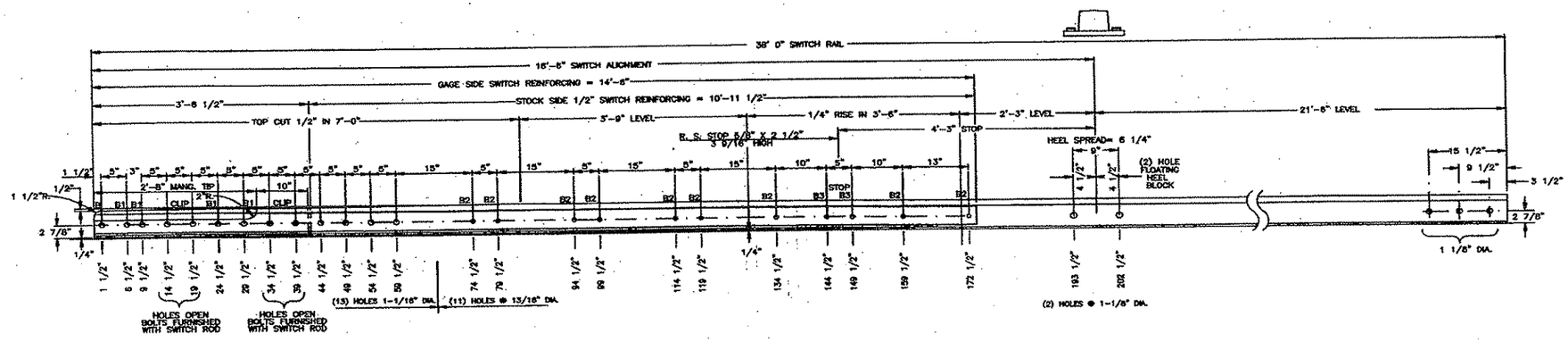

MACHINING:
BEND 1 3/8" IN 6'-2 5/16"
HEAD CUT (GAGE SIDE)= 6'-2 5/16" @ 78°
CHAMFER 1/4" PT. TO 1/8" IN 18" @ 78°
HEAD CUT (STOCK SIDE)= 6'-2 5/16" @ 13'-07"
FLANGE CUT= 15'-1 3/4" @ 14°

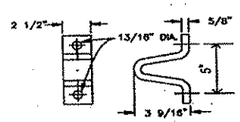

DETAIL OF STOP

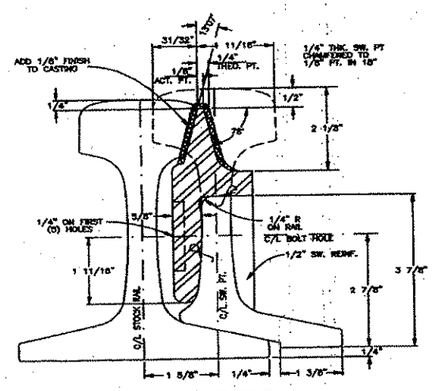

SECTION AT POINT
SIMILAR TO A.R.E.A. DETAIL 5100
(SCALE 6"=12")

NOTES:
1) RAIL TO BE 115RE HEAD HARDENED
2) RAIL GAGE IS MEASURED AT 1/4" BELOW TOP OF RAIL.
3) FOR MANGANESE TIP SEE DWG. 02I0241

BILL OF BOLTS FOR SWITCH POINT						
MARK	SIZE	HEAD	NUT	SPRING	COT.	QTY.
B	BOLT 1" x 3 1/4" DR. 3"	T.H.	SQ.	1	1/4"	1
B1	BOLT 1" x 3 1/2" DR. 3 1/4"	T.H.	SQ.	1	1/4"	4
B2	BOLT 3/4" x 3 1/2" DR. 3"	S.H.	SQ.	1	3/16"	6
B3	BOLT 3/4" x 4" DR. 3 5/8"	S.H.	SQ.	1	3/16"	2

OPEN BOLTS NOT FURNISHED WITH SW. POINT

17x28 $FILE$

NO.	DATE	REVISION	BY

FOSTER

16'-6" STR. SWITCH (38'-0" RAIL) MANG. TIP
1/4" POINT (CHAMFERED TO 1/8" PT.
115RE-GRADUATED RISER SWITCH

CUSTOMER			
PORT AUTHORITY OF ALLEGHENY COUNTY			
DWG. 2-4-04	WORK ORDER NUMBER P.O. #		SCALE 1"=12"
DRAWN BY K-BH	CHKD. BY	APPRD. BY	SHEET 1 of 1	DRAWING NUMBER LBF-PAACO-16-6-2004

NOTES:

1. FLOATING HEEL BLOCK AND MANGANESE SWITCH POINT INSERT DETAILS SHOWN ARE FOR GENERAL INFORMATION ONLY. ACTUAL DIMENSIONS TO BE DESIGNED TO FIT SWITCH SIZE AND SPACING OF LAYOUT.
2. DRAWING USED WITH PERMISSION OF L.B. FOSTER CO.

Gannett Fleming
Transit & Rail Systems

NO.	DATE	DESCRIPTION

REVISIONS

THE PREPARATION OF THIS DOCUMENT HAS BEEN FINANCED IN PART THROUGH A GRANT FROM THE FEDERAL TRANSIT ADMINISTRATION, U.S. DEPARTMENT OF TRANSPORTATION, UNDER THE URBAN MASS TRANSPORTATION ACT OF 1964, AS AMENDED, FOR THE PORT AUTHORITY OF ALLEGHENY COUNTY, PENNSYLVANIA.

COMMONWEALTH OF PENNSYLVANIA
REGISTERED PROFESSIONAL
RICHARD CROSS IV
ENGINEER
SIGNATURE

DMJM HARRIS | AECOM
FOUR GATEWAY CENTER
20TH FLOOR
PITTSBURGH, PA. 15222

APPROVED DATE

DESIGNED	JF BARBIERE
DRAWN	JF BARBIERE
CHECKED	BR SMITH
IN CHARGE	R CROSS
DATE	SEP. 13.2007
SCALE	N.T.S.

PORT AUTHORITY OF ALLEGHENY COUNTY
PITTSBURGH PENNSYLVANIA

NORTH SHORE CONNECTOR
NSC TRAIN SYSTEM (SYSTEM WIDE)
GATEWAY DOUBLE CROSSOVER
FLOATING HEEL BLOCK /MANGANESE SWITCH POINT INSERT DETAILS (1 OF 2)

Port Authority

CONTRACT NO. 3002
DWG. NO. GW129 SHT. 14

$DATE$ $TIME$
$FILE$

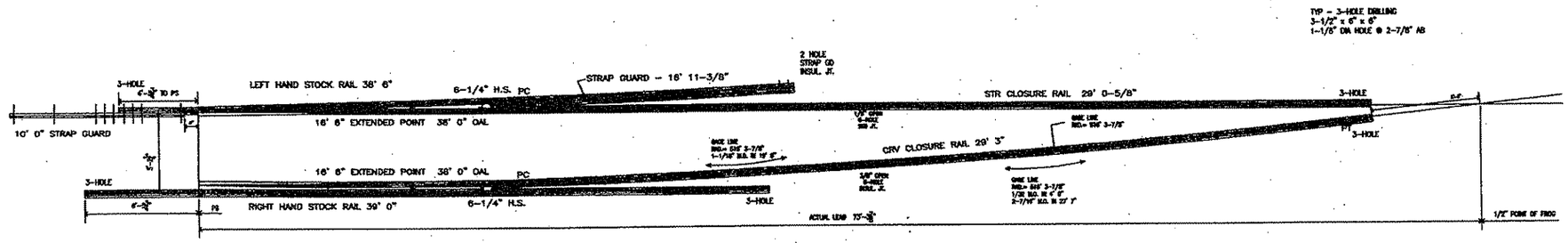

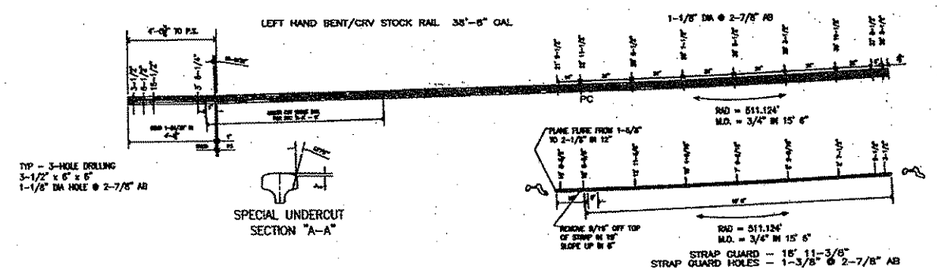

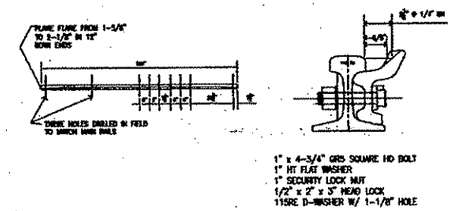

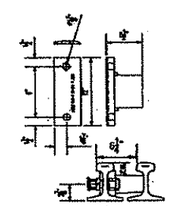

MATERIAL REQUIRED FOR ONE HEEL BLOCK ASSY.

1 EA C.I. FLOATING HEEL BLOCK 115RE H-2-0.25
1 EA 1/2" x 12" x 115RE "D" BAR
2 EA 1" x 4-1/4" SQUARE HEAD BOLT
2 EA 1/2" x 1/2" x 1" HEAVY LOCK WASHER
2 EA 1" HEAVY SQUARE NUT
2 EA 1/4" x 2-1/2" COTTER KEY

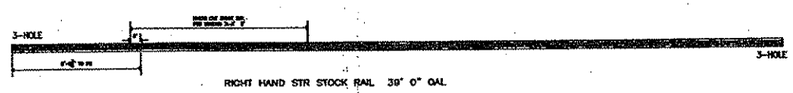

FOSTER

115RE 16' 6" LH SWITCH

PORT AUTHORITY OF ALLEGHENY COUNTY

CUSTOMER				
PORT AUTHORITY OF ALLEGHENY COUNTY				
DATE 2-4-04	WORK ORDER NUMBER -			SCALE NONE
DWN BY	CHKD BY	APPVD BY	SHEET	DRAWING NUMBER
K-BH		KITS	10F1	LBF-PAACO-16-6-2004

NO.	DATE	REVISION	BY

NOTES:

1. FLOATING HEEL BLOCK AND MANGANESE SWITCH POINT INSERT DETAILS SHOWN ARE FOR GENERAL INFORMATION ONLY. ACTUAL DIMENSIONS TO BE DESIGNED TO FIT SWITCH SIZE AND SPACING OF LAYOUT.
2. DRAWING USED WITH PERMISSION OF L.B. FOSTER CO.

Gannett Fleming Transit & Rail Systems

NO.	DATE	DESCRIPTION

REVISIONS

THE PREPARATION OF THIS DOCUMENT HAS BEEN FINANCED IN PART THROUGH A GRANT FROM THE FEDERAL TRANSIT ADMINISTRATION, U.S. DEPARTMENT OF TRANSPORTATION, UNDER THE URBAN MASS TRANSPORTATION ACT OF 1964, AS AMENDED. FOR THE PORT AUTHORITY OF ALLEGHENY COUNTY, PENNSYLVANIA.

COMMONWEALTH OF PENNSYLVANIA PROFESSIONAL ENGINEER RICHARD CROSS IV

SIGNATURE

DMJM HARRIS | AECOM
FOUR GATEWAY CENTER
20TH FLOOR
PITTSBURGH, PA. 15222

APPROVED DATE

DESIGNED	JF BARBIERE
DRAWN	JF BARBIERE
CHECKED	BR SMITH
IN CHARGE	R CROSS
DATE	SEP. 13.2007
SCALE	N.T.S.

PORT AUTHORITY OF ALLEGHENY COUNTY
PITTSBURGH PENNSYLVANIA

NORTH SHORE CONNECTOR
NSC TRAIN SYSTEM (SYSTEM WIDE)
GATEWAY DOUBLE CROSSOVER
FLOATING HEEL BLOCK /MANGANESE SWITCH POINT INSERT DETAILS (2 OF 2)

Port Authority

CONTRACT NO. 3002
DWG. NO. GW130 SHT. 15

$DATE$ $TIME$
$FILE$

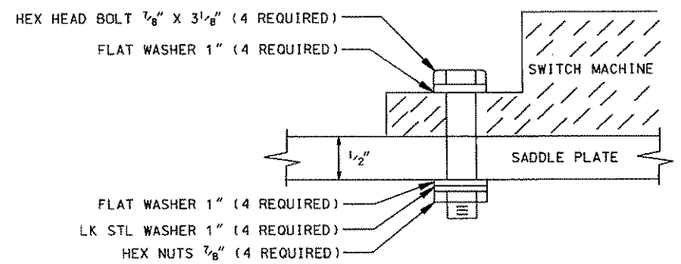

MOUNTING SADDLE PLATE TO SWITCH MACHINE DETAIL (1 / GW140)

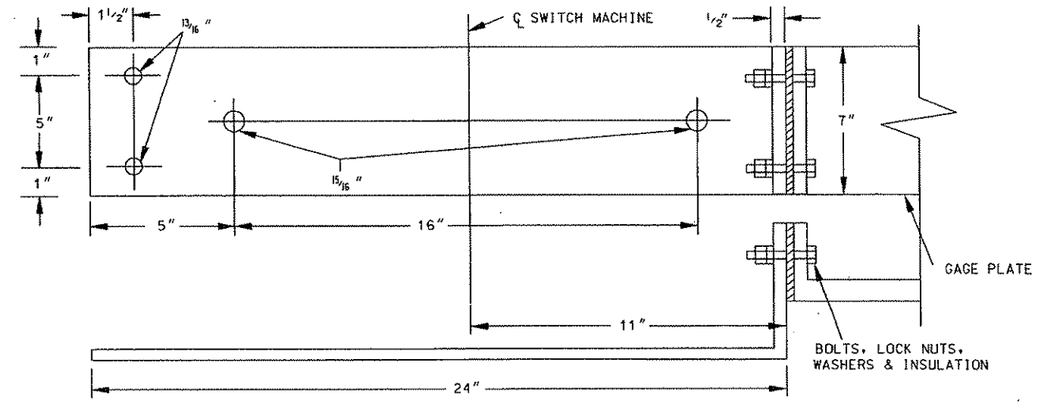

SADDLE PLATE DETAIL (2 / GW140)

NOTES:

1. SURFACES TO BE SMOOTH, PARALLEL AND PERPENDICULAR TO TOP SURFACE OF MOUNTING PLATE.
2. EXACT LOCATION OF MOUNTING HOLE TO BE DETERMINED AFTER SWITCH MACHINE SELECTED.
3. SADDLE MOUNTING PLATE TO BE SUPPLIED.
4. SADDLE PLATE TO BE PAINTED FLAT BACK BEFORE INSTALLATION.
5. ALL THREADED RODS, NUTS, LOCK WASHERS TO BE STAINLESS STEEL.

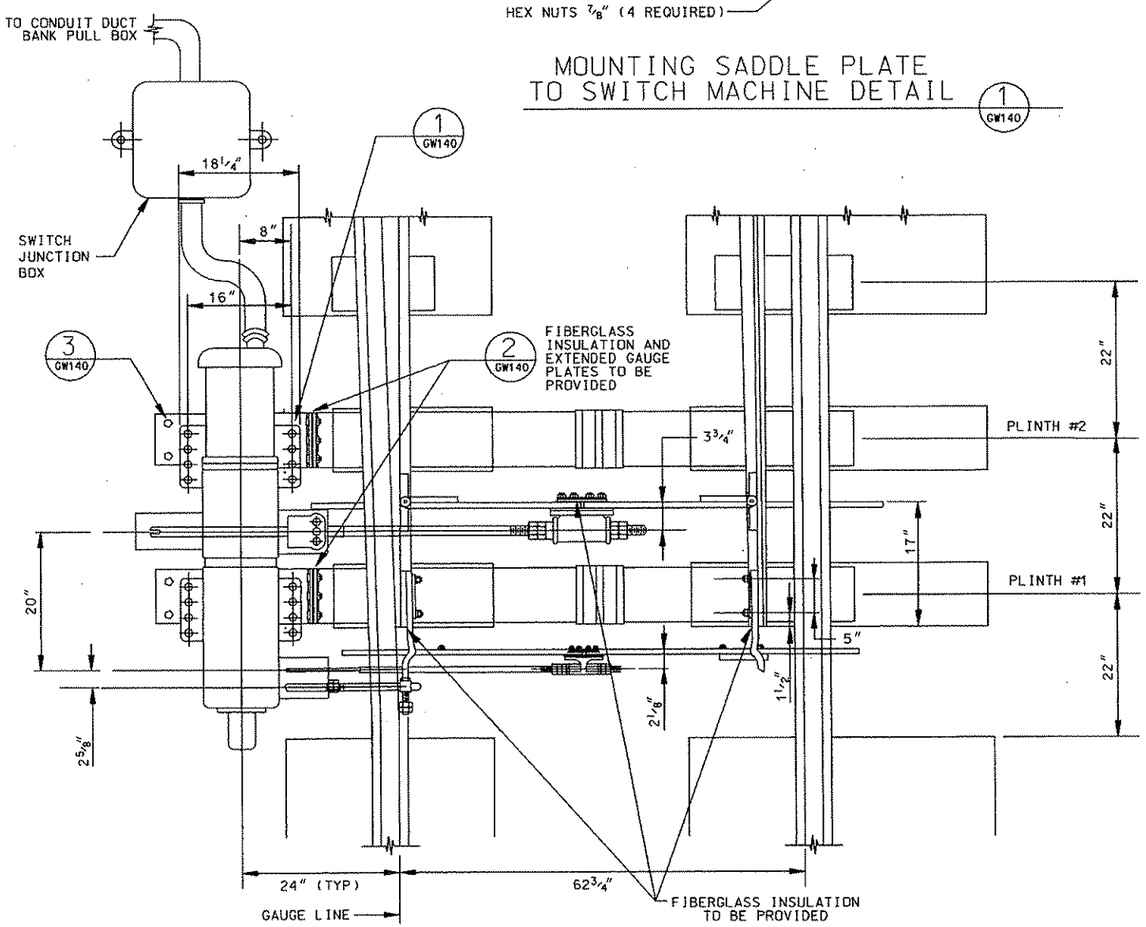

M3 POWER SWITCH LAYOUT - DIRECT FIXATION

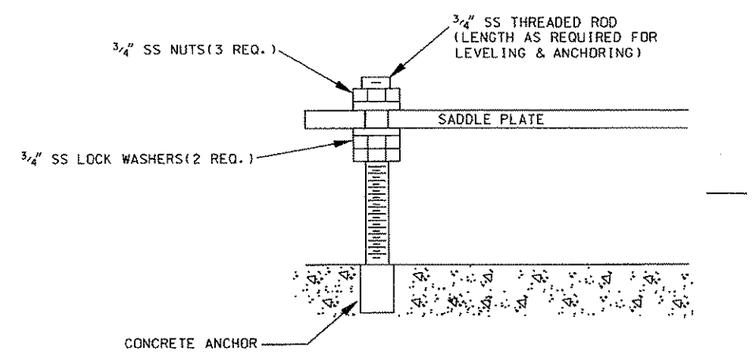

SADDLE PLATE ANCHOR DETAIL (3 / GW140)

NOTE: 2 REQUIRED FOR EACH SADDLE PLATE.

NOTES:

1. THIS TYPICAL TO BE UTILIZED FOR SWITCH MACHINES AT GATEWAY INTERLOCKING ONLY.
2. FOR STRAP GUARD END FLARE DETAILS SEE DRAWING GW124. END OF STRAP GUARD SHALL BE AS CLOSE AS POSSIBLE TO THE POINT OF SWITCH WITHOUT INTERFERING WITH SWITCH MACHINE CONNECTING RODS AND POINT DETECTOR ROD. FURNISH TWO (2) PIECES OF STRAP GUARD AHEAD OF SWITCH POINT. LENGTH TO BE 5'-0" TO 7'-0".

Gannett Fleming Transit & Rail Systems

NO.	DATE	DESCRIPTION

REVISIONS

THE PREPARATION OF THIS DOCUMENT HAS BEEN FINANCED IN PART THROUGH A GRANT FROM THE FEDERAL TRANSIT ADMINISTRATION, U.S. DEPARTMENT OF TRANSPORTATION, UNDER THE URBAN MASS TRANSPORTATION ACT OF 1964, AS AMENDED. FOR THE PORT AUTHORITY OF ALLEGHENY COUNTY, PENNSYLVANIA.

COMMONWEALTH OF PENNSYLVANIA PROFESSIONAL ENGINEER RICHARD CROSS IV

SIGNATURE

DMJM HARRIS | AECOM
FOUR GATEWAY CENTER
20TH FLOOR
PITTSBURGH, PA. 15222

APPROVED DATE

DESIGNED	JF SAMEAN
DRAWN	JC TRAUM
CHECKED	CD JONES
IN CHARGE	CD JONES
DATE	SEP. 13.2007
SCALE	NTS

PORT AUTHORITY OF ALLEGHENY COUNTY
PITTSBURGH PENNSYLVANIA

NORTH SHORE CONNECTOR
NSC TRAIN SYSTEM (SYSTEM WIDE)
GATEWAY DOUBLE CROSSOVER
TYPICAL M3 POWER SWITCH LAYOUT - DIRECT FIXATION (1 OF 2)

Port Authority

CONTRACT NO. 9002
DWG. NO. GW140 SHT. 16

DATE: 9/13/07
FILE: 9

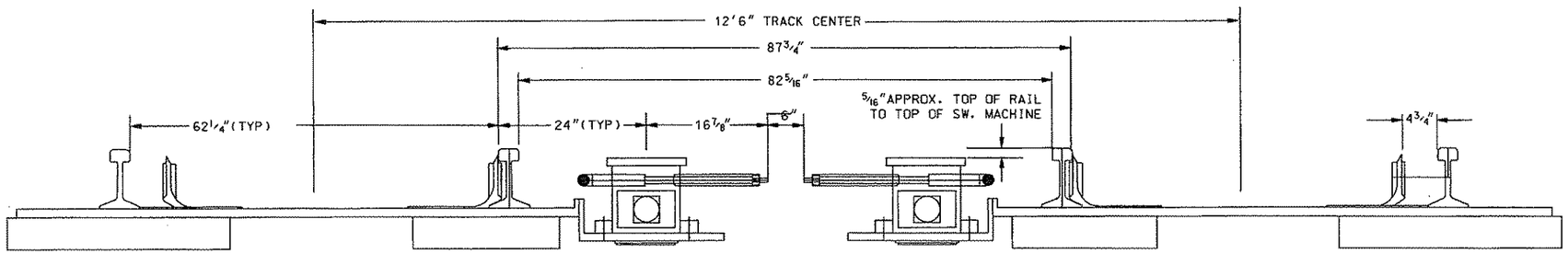

BACK TO BACK M3 SWITCH MACHINES

NOTES:

1. THIS TYPICAL TO BE UTILIZED FOR SWITCH MACHINES AT GATEWAY INTERLOCKING ONLY.
2. THIS DRAWING INDICATES TYPICAL INSTALLATION DIMENSIONS FOR A US&S STYLE M3 LOW PROFILE SWITCH MACHINE. ALL DIMENSIONS TO BE VERIFIED BY THE CONTRACTOR.
3. CONTRACTOR IS RESPONSIBLE FOR ACTUAL MECHANICAL DESIGN OF LAYOUT AND ALL RODS AND THROW BARS.
4. SEE DRAWING GW140 FOR SWITCH MACHINE MOUNTING DETAILS.

Gannett Fleming Transit & Rail Systems

NO.	DATE	DESCRIPTION

REVISIONS

THE PREPARATION OF THIS DOCUMENT HAS BEEN FINANCED IN PART THROUGH A GRANT FROM THE FEDERAL TRANSIT ADMINISTRATION, U.S. DEPARTMENT OF TRANSPORTATION, UNDER THE URBAN MASS TRANSPORTATION ACT OF 1964, AS AMENDED. FOR THE PORT AUTHORITY OF ALLEGHENY COUNTY, PENNSYLVANIA.

COMMONWEALTH OF PENNSYLVANIA PROFESSIONAL ENGINEER RICHARD CROSS IV

SIGNATURE

DMJM HARRIS | AECOM
FOUR GATEWAY CENTER
20TH FLOOR
PITTSBURGH, PA. 15222

APPROVED DATE

DESIGNED	JF SAMEAN
DRAWN	JC TRAUM
CHECKED	CD JONES
IN CHARGE	CD JONES
DATE	SEP. 13.2007
SCALE	NTS

PORT AUTHORITY OF ALLEGHENY COUNTY
PITTSBURGH PENNSYLVANIA

NORTH SHORE CONNECTOR
NSC TRAIN SYSTEM (SYSTEM WIDE)
GATEWAY DOUBLE CROSSOVER
TYPICAL M3 POWER SWITCH LAYOUT - DIRECT FIXATION (2 OF 2)

Port Authority

CONTRACT NO. 3002
DWG. NO. GW141 SHT. 17

DATE: 9/13/07
FILE:

NOTES:

1. FOR GENERAL NOTES, SEE DRAWINGS TN100 AND TN101.
2. ALL COORDINATES ARE BASED ON THE PENNSYLVANIA STATE PLANE COORDINATE SYSTEM.
3. FOR TRACK GEOMETRY SEE DWGS TK101 THROUGH TK106 AND DWG GN028. OFFSETS MEASURED FROM TRACK CENTERLINE TO TUNNEL CENTERLINE LOOKING UPSTATION.
4. SEE DRAWING TN842 FOR LEFT TUNNEL CENTERLINE GEOMETRY.
5. FOR DETAILS OF TUNNEL LOW POINT SUMP PIT, SEE DRAWINGS TN378 AND TN379.
6. SEE LEGEND, DRAWING TN310 FOR TUNNEL CENTERLINE / TRACK CENTERLINE RELATIONSHIP.
7. SEE PL DWGS. FOR LOCATION AND DETAILS OF DRAINAGE INLETS.

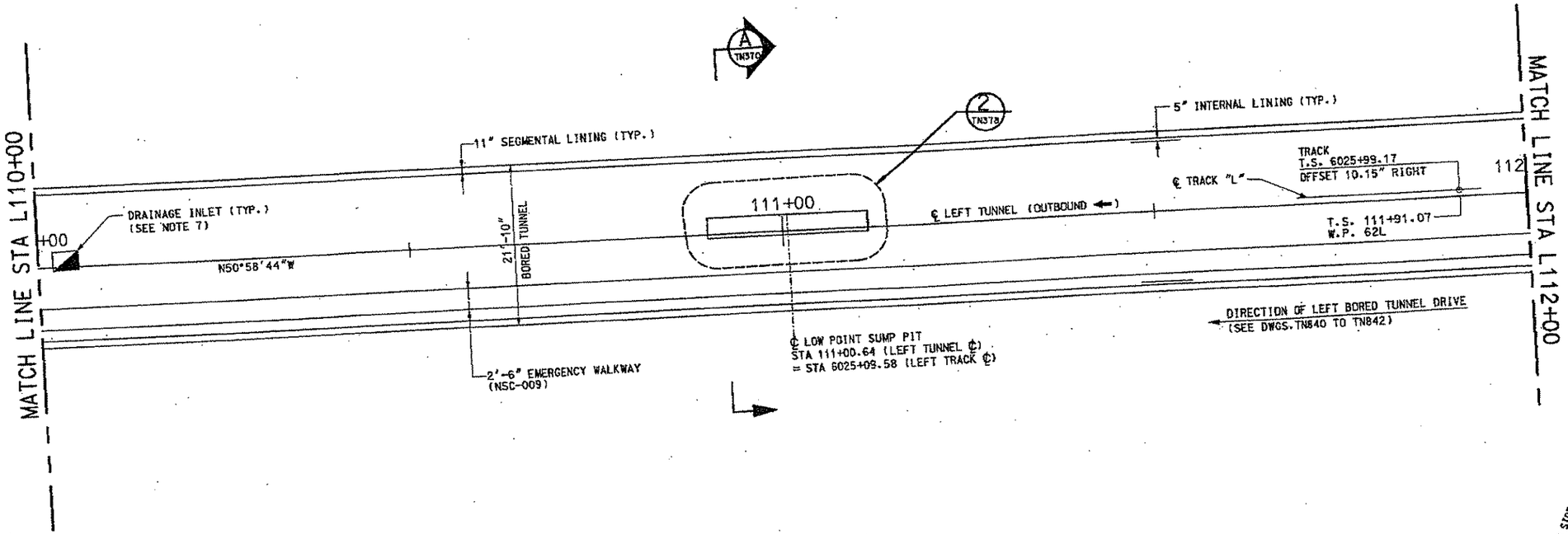

PLAN @ TUNNEL AXIS LEVEL

STA L110+00 TO STA L112+00

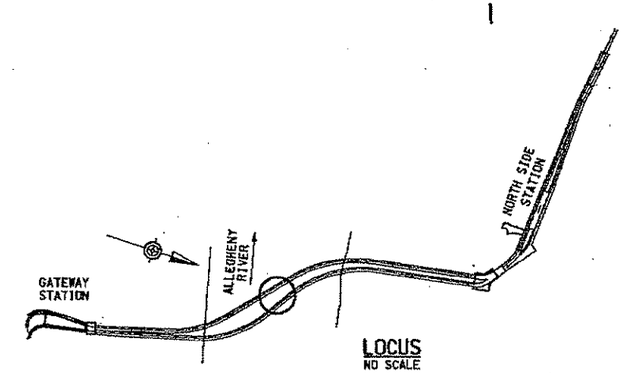

LOCUS
NO SCALE

NO.	DATE	DESCRIPTION

REVISIONS

THE PREPARATION OF THIS DOCUMENT HAS BEEN FINANCED IN PART THROUGH A GRANT FROM THE FEDERAL TRANSIT ADMINISTRATION, U.S. DEPARTMENT OF TRANSPORTATION, UNDER THE URBAN MASS TRANSPORTATION ACT OF 1964, AS AMENDED, FOR THE PORT AUTHORITY OF ALLEGHENY COUNTY, PENNSYLVANIA.

COMMONWEALTH OF PENNSYLVANIA — REGISTERED PROFESSIONAL ENGINEER — PETER DENNIS MAURITZ — PE071163

SIGNATURE

DMJM HARRIS | AECOM
FOUR GATEWAY CENTER
20TH FLOOR
PITTSBURGH, PA. 15222

APPROVED — DATE 11-2-05

DESIGNED	KAD
DRAWN	DNC
CHECKED	PDM
IN CHARGE	PAR
DATE	NOV. 2, 2005
SCALE	1/8"=1'-0" (8' 4' 0 8')

PORT AUTHORITY OF ALLEGHENY COUNTY
PITTSBURGH PENNSYLVANIA

NORTH SHORE CONNECTOR
ALLEGHENY RIVER TUNNEL LAUNCH PIT TO RECEIVING PIT
PLAN @ TUNNEL AXIS LEVEL
STA L110+00 TO STA L112+00

PORT AUTHORITY

CONTRACT NO. NSC-009
DWG. NO. TN317 SHT. 66

10/25/2005 9:20
m:\nsf\final\gw\tunnel\03\tn317.dgn

NOTES:

1. FOR GENERAL NOTES, SEE DRAWINGS TN100 AND TN101.
2. ALL COORDINATES ARE BASED ON THE PENNSYLVANIA STATE PLANE COORDINATE SYSTEM.
3. FOR TRACK GEOMETRY SEE DWGS TK101 THROUGH TK106 AND DWG GN028. OFFSETS MEASURED FROM TRACK CENTERLINE TO TUNNEL CENTERLINE LOOKING UPSTATION.
4. SEE DRAWING TN845 FOR RIGHT TUNNEL CENTERLINE GEOMETRY.
5. FOR DETAILS OF TUNNEL LOW POINT SUMP PIT, SEE DRAWINGS TN378 AND TN379.
6. SEE LEGEND, DRAWING TN310 FOR TUNNEL CENTERLINE / TRACK CENTERLINE RELATIONSHIP.
7. SEE PL DWGS. FOR LOCATION AND DETAILS OF DRAINAGE INLETS.

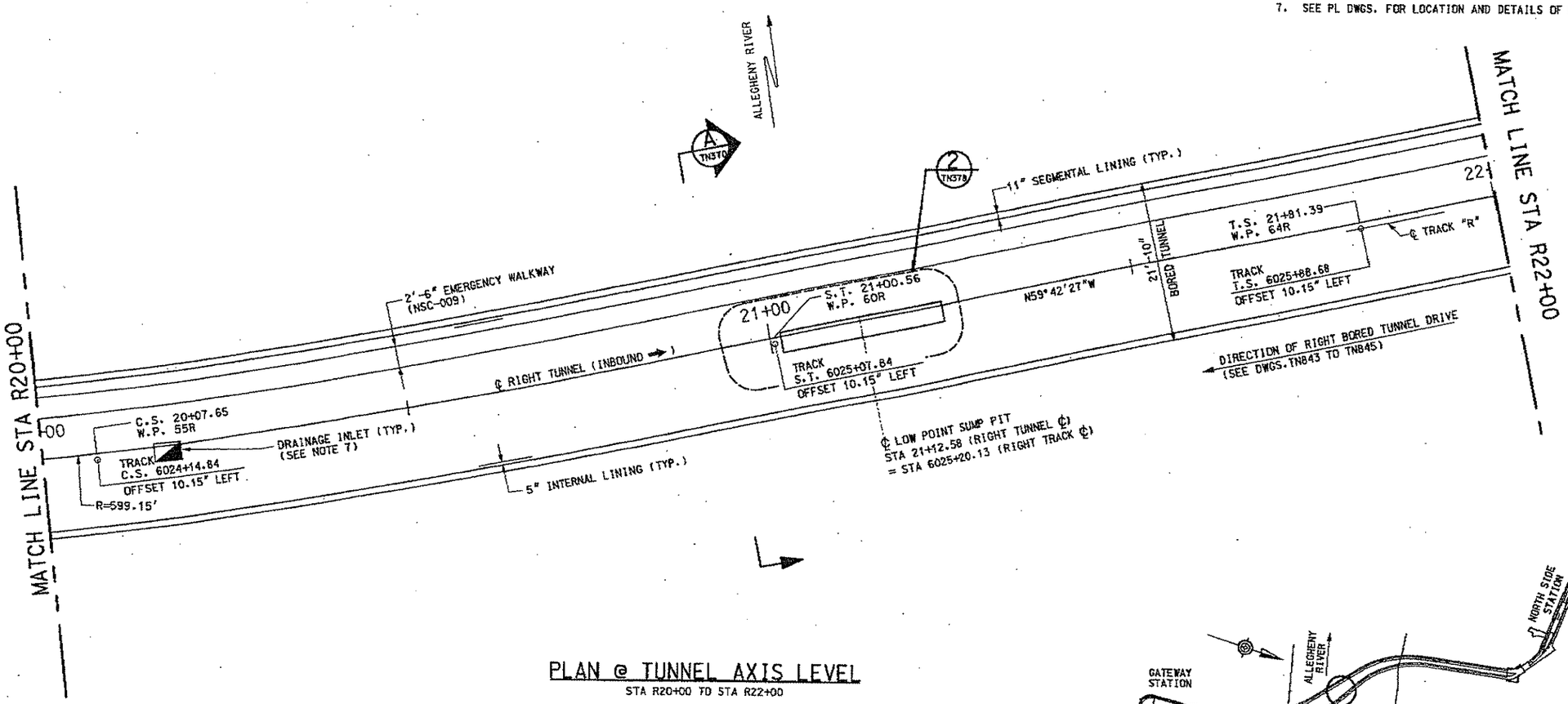

PLAN @ TUNNEL AXIS LEVEL

STA R20+00 TO STA R22+00

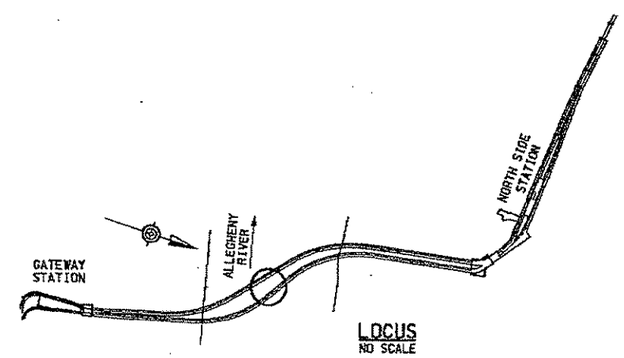

LOCUS

NO SCALE

NO.	DATE	DESCRIPTION

REVISIONS

THE PREPARATION OF THIS DOCUMENT HAS BEEN FINANCED IN PART THROUGH A GRANT FROM THE FEDERAL TRANSIT ADMINISTRATION, U.S. DEPARTMENT OF TRANSPORTATION, UNDER THE URBAN MASS TRANSPORTATION ACT OF 1964, AS AMENDED, FOR THE PORT AUTHORITY OF ALLEGHENY COUNTY, PENNSYLVANIA.

COMMONWEALTH OF PENNSYLVANIA REGISTERED PROFESSIONAL ENGINEER PETER DENNIS MAURITZ PE071183

SIGNATURE

DMJM HARRIS | AECOM
FOUR GATEWAY CENTER
20TH FLOOR
PITTSBURGH, PA. 15222

APPROVED — 11-2-05 DATE

DESIGNED	KAD
DRAWN	DWC
CHECKED	PDM
IN CHARGE	PAR
DATE	NOV. 2, 2005
SCALE	1/8"=1'-0"

8' 4' 0 8'

PORT AUTHORITY OF ALLEGHENY COUNTY
PITTSBURGH PENNSYLVANIA

NORTH SHORE CONNECTOR
ALLEGHENY RIVER TUNNEL LAUNCH PIT TO RECEIVING PIT
PLAN @ TUNNEL AXIS LEVEL
STA R20+00 TO STA R22+00

PORT AUTHORITY

CONTRACT NO. NSC-003
DWG. NO. TN318 SHT. 67

10/26/2005 9:20:
n:\nsf\final\gw\tunnel\03tn318_r.dgn

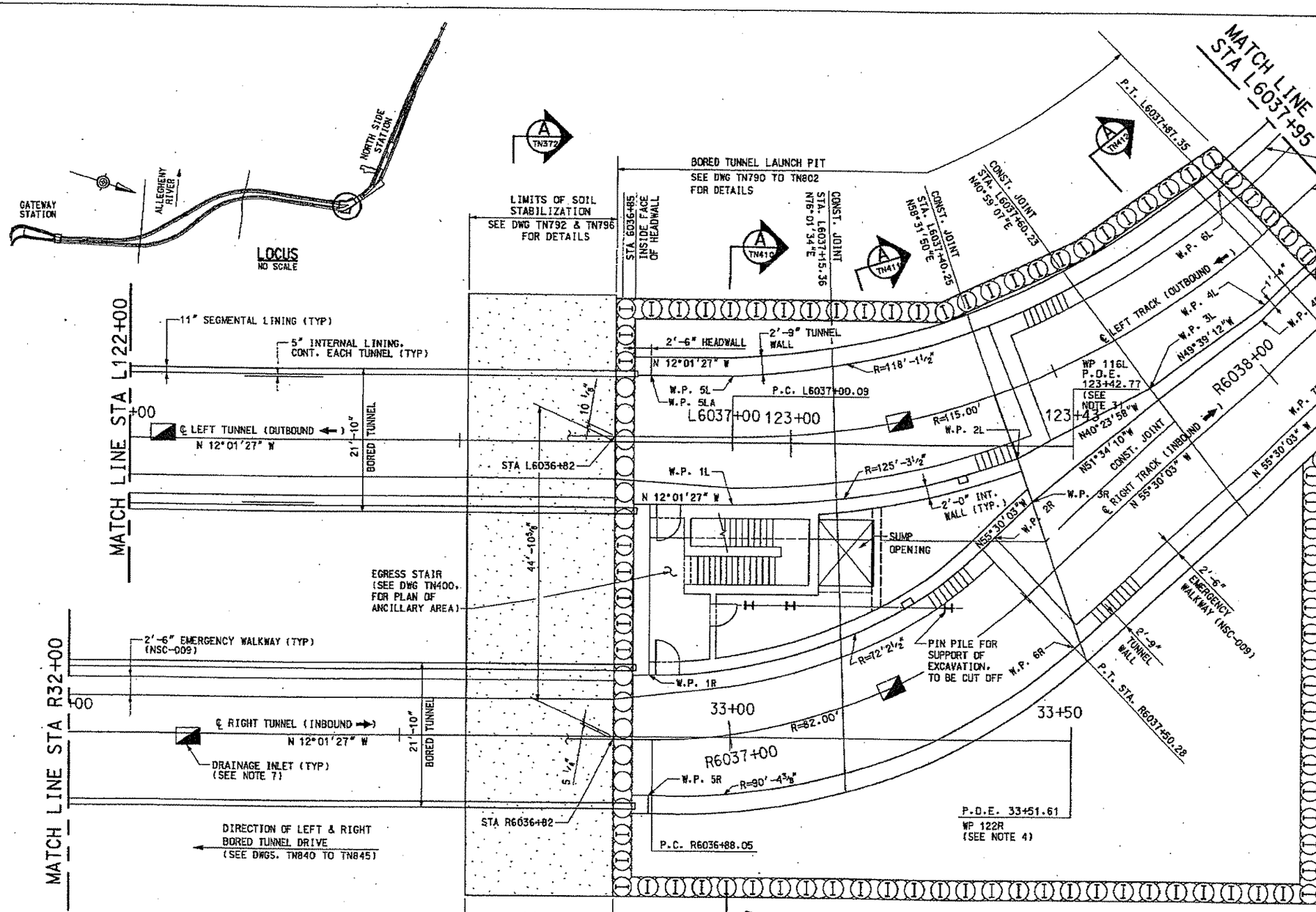

PLAN @ TUNNEL AXIS LEVEL

STA L122+00 TO STA L123+43
STA R32+00 TO STA R33+52
TRACK STA L6036+85 TO STA L6037+95/ STA R6036+85 TO STA R6038+26.13

NOTES:

1. FOR GENERAL NOTES, SEE DRAWINGS TN100 & TN101
2. FOR TRACK GEOMETRY SEE DWGS TK101 THROUGH TK106 AND DWG GN028. OFFSETS MEASURED FROM TRACK CENTERLINE TO TUNNEL CENTERLINE LOOKING UPSTATION.
3. SEE DRAWING TN842 FOR LEFT TUNNEL CENTERLINE GEOMETRY OF BORED TUNNEL.
4. SEE DRAWING TN845 FOR RIGHT TUNNEL CENTERLINE GEOMETRY OF BORED TUNNEL.
5. SEE LEGEND, DRAWING TN310 FOR TUNNEL CENTERLINE /TRACK CENTERLINE RELATIONSHIP.
6. SEE PL DWGS. FOR LOCATION AND DETAILS OF DRAINAGE INLETS AND SUMP DISCHARGE PIPE.

TABLE OF WORKPOINTS

WORKPOINT	STATION	OFFSET
W.P. 1L	L6037+00.09	10'-3⅝" RIGHT
W.P. 2L	L6037+40.25	10'-3⅝" RIGHT
W.P. 3L	L6037+61.26	9'-0⅜" RIGHT
W.P. 4L	L6037+80.95	8'-2⅜" RIGHT
W.P. 5L	L6037+00.09	9'-4¾" LEFT
W.P. 5LA	L6036+87.50	9'-4¾" LEFT
W.P. 6L	L6037+87.35	9'-4¾" LEFT
W.P. 1R	R6036+87.50	9'-9⅝" LEFT
W.P. 2R	R6037+52.88	9'-10⅛" LEFT
W.P. 3R	R6037+60.63	9'-10⅛" LEFT
W.P. 4R	R6038+04.69	6'-9⅞" LEFT
W.P. 5R	R6036+87.50	8'-5 " RIGHT
W.P. 6R	R6037+50.28	10'-10⅞" RIGHT
W.P. 7R	R6037+85.00	10'-10⅞" RIGHT

NO.	DATE	DESCRIPTION

REVISIONS

THE PREPARATION OF THIS DOCUMENT HAS BEEN FINANCED IN PART THROUGH A GRANT FROM THE FEDERAL TRANSIT ADMINISTRATION, U.S. DEPARTMENT OF TRANSPORTATION, UNDER THE URBAN MASS TRANSPORTATION ACT OF 1964, AS AMENDED, FOR THE PORT AUTHORITY OF ALLEGHENY COUNTY, PENNSYLVANIA.

COMMONWEALTH OF PENNSYLVANIA REGISTERED PROFESSIONAL ENGINEER PETER DENNIS MAURITZ PE071163

SIGNATURE

DMJM HARRIS | AECOM
FOUR GATEWAY CENTER
20TH FLOOR
PITTSBURGH, PA. 15222

APPROVED 11-2-05 DATE

DESIGNED	PDM
DRAWN	DWC
CHECKED	KV
IN CHARGE	PAR
DATE	NOV. 2, 2005
SCALE	1/8"=1'-0"

8' 4' 0 8'

PORT AUTHORITY OF ALLEGHENY COUNTY
PITTSBURGH PENNSYLVANIA

NORTH SHORE CONNECTOR
ALLEGHENY RIVER TUNNEL LAUNCH PIT TO RECEIVING PIT
PLAN @ TUNNEL AXIS LEVEL
STA L122+00 TO STA L123+43 / STA L6036+85 TO STA L6037+85

PORT AUTHORITY

CONTRACT NO. NSC-003
DWG. NO. TN326 SHT. 75

10/25/2005 9:26
m:\nsf\finance\tunnel\03tn326.dgn

NOTES:

1. FOR GENERAL NOTES. SEE DRAWINGS TN100 & TN101.
2. ALL COORDINATES ARE BASED ON THE PENNSYLVANIA STATE PLANE COORDINATE SYSTEM.
3. FOR TRACK GEOMETRY SEE DWGS TK 101 THROUGH TK106 AND DWG GN028.
4. SEE TN784 FOR SUPPORT OF EXCAVATION OF BENT10 & BENT 11 OF THE I-279 APPROACH TO FORT DUQUESNE BRIDGE.
5. SEE DWG TN420 FOR BASE SLAB PROFILE IN AREA OF TRACK CROSSING.
6. 2'-6" AND 3'-0" EMERGENCY WALKWAYS ARE NOT PART OF NSC-003. WALKWAYS ARE SHOWN FOR CLARITY AND ARE PROVIDED IN THE NSC-009 CONTRACT.
7. SEE PL DWGS. FOR LOCATION AND DETAILS OF DRAINAGE INLETS.

TABLE OF WORKPOINTS

WORKPOINT	STATION	OFFSET	
W.P. 7L	L6038+52.00	9'-4¾"	LEFT
W.P. 8L	L6038+93.57	9'-4¾"	LEFT
W.P. 9L	L6039+31.58	9'-4¾"	LEFT
W.P. 10L	L6039+59.00	9'-4¾"	LEFT
W.P. 8R	R6038+43.95	9'-4"	RIGHT
W.P. 9R	R6039+76.74	22'-9⅞"	RIGHT
W.P. C1	L6038+35.83	8'-0⅛"	RIGHT
W.P. C2	L6038+35.83	7'-4⅛"	RIGHT
W.P. C3	L6038+47.83	7'- 4⅛"	RIGHT
W.P. C4	R6038+73.95	6'-9⅞"	LEFT

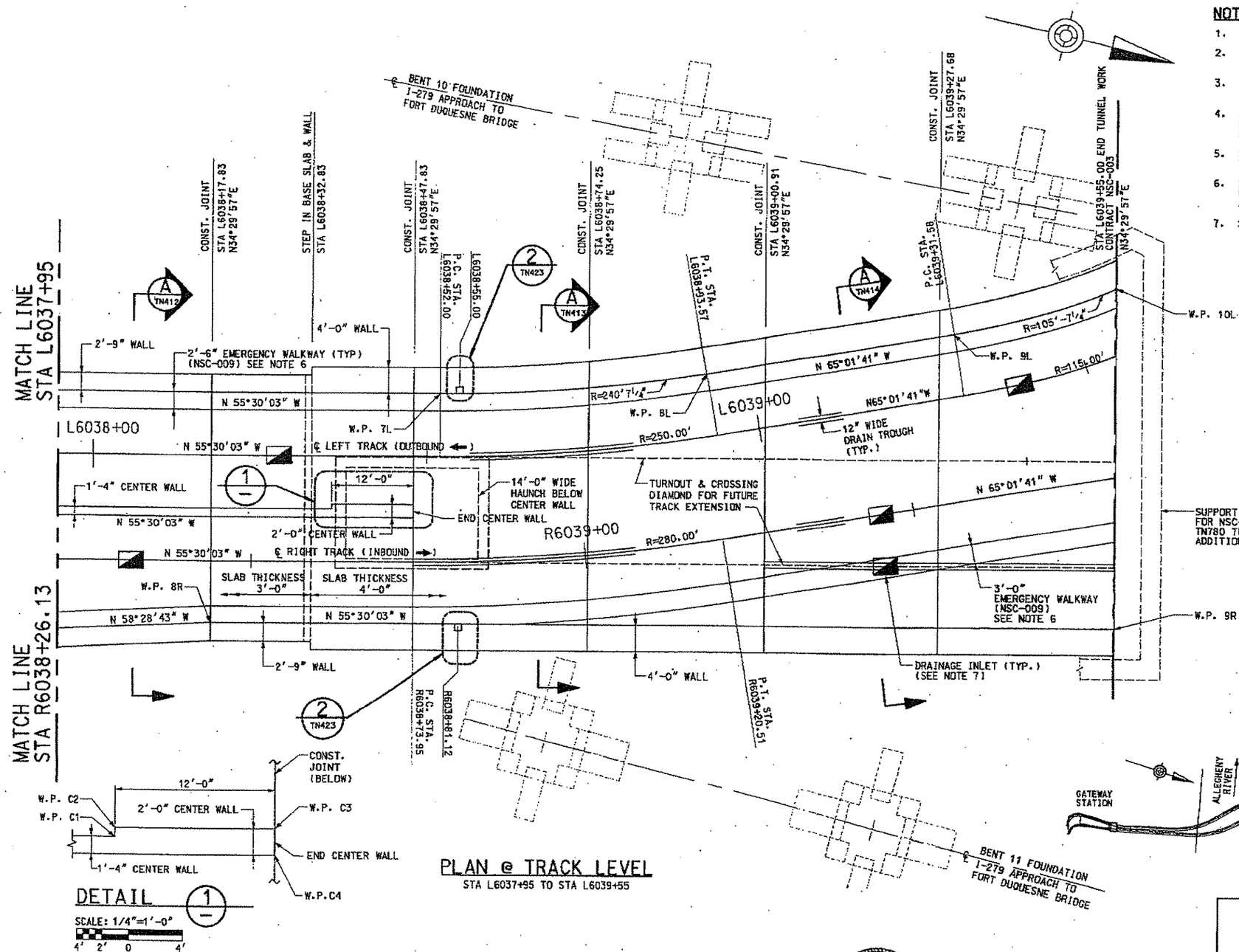

PLAN @ TRACK LEVEL

STA L6037+95 TO STA L6039+55

DETAIL 1

SCALE: 1/4"=1'-0"

LOCUS

NO SCALE

NO.	DATE	DESCRIPTION

REVISIONS

THE PREPARATION OF THIS DOCUMENT HAS BEEN FINANCED IN PART THROUGH A GRANT FROM THE FEDERAL TRANSIT ADMINISTRATION, U.S. DEPARTMENT OF TRANSPORTATION, UNDER THE URBAN MASS TRANSPORTATION ACT OF 1964, AS AMENDED. FOR THE PORT AUTHORITY OF ALLEGHENY COUNTY, PENNSYLVANIA.

COMMONWEALTH OF PENNSYLVANIA — REGISTERED PROFESSIONAL — PETER DENNIS MAURITZ — PE071983

SIGNATURE

DMJM HARRIS | AECOM

FOUR GATEWAY CENTER
20TH FLOOR
PITTSBURGH, PA. 15222

APPROVED — 11-2-05 DATE

DESIGNED	PDM
DRAWN	DWC
CHECKED	KV
IN CHARGE	PAR
DATE	NOV. 2, 2005
SCALE	1/8"=1'-0" U.O.N.

PORT AUTHORITY OF ALLEGHENY COUNTY
PITTSBURGH PENNSYLVANIA

NORTH SHORE CONNECTOR
ALLEGHENY RIVER TUNNEL LAUNCH PIT TO RECEIVING PIT
PLAN @ TRACK LEVEL
STA L6037+95 TO STA L6039+55

PORT AUTHORITY

CONTRACT NO. NSC-003
DWG. NO. TN327 SHT. 76

10/25/2005 9:26
n:\ns\f\final\pr\tunnel\03tn327.dgn

NOTES:

1. FOR GENERAL NOTES, SEE DRAWINGS TN100 & TN101.
2. SEE DRAWINGS TN840 TO TN842 FOR LEFT TUNNEL ALIGNMEMT AND PROFILE. PROFILE INFORMATION IS GIVEN AT CENTERLINE OF TUNNEL AXIS.
3. SEE DRAWING TN305, TN306 AND GEOTECHNICAL DATA REPORT FOR SOIL ROCK PROFILE INFORMATION.

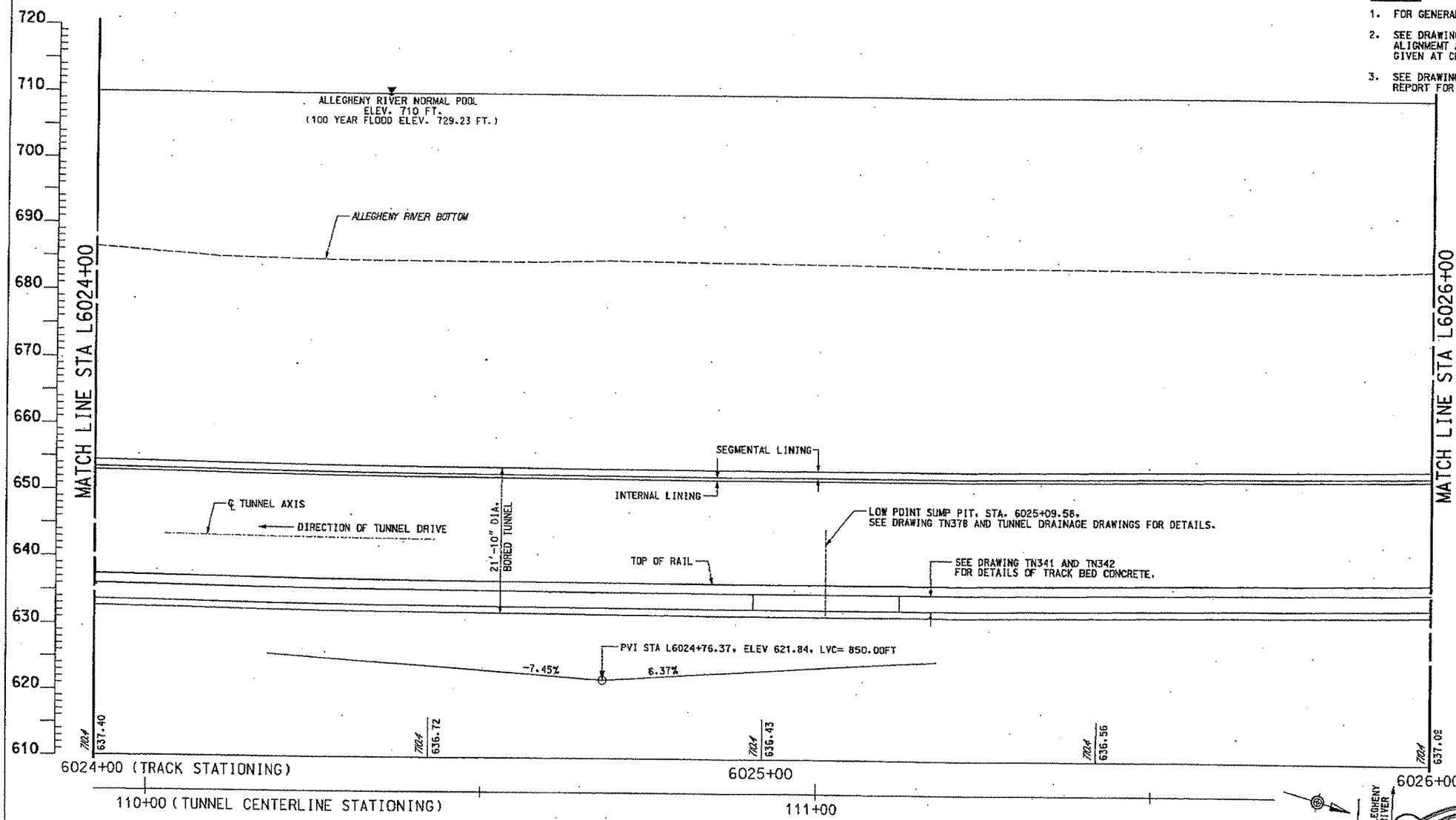

LEFT TUNNEL LONGITUDINAL ELEVATION

STA L6024+00 TO STA L6026+00

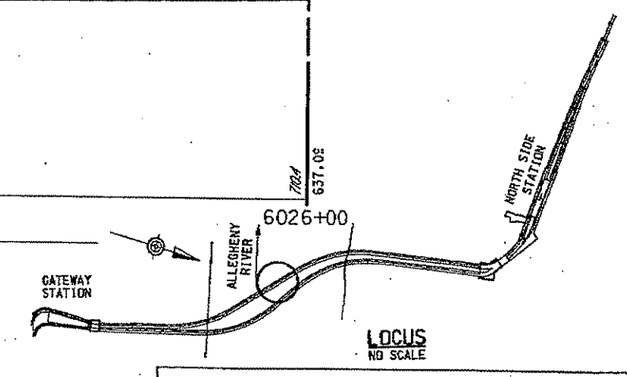

LOCUS
NO SCALE

NO.	DATE	DESCRIPTION

REVISIONS

THE PREPARATION OF THIS DOCUMENT HAS BEEN FINANCED IN PART THROUGH A GRANT FROM THE FEDERAL TRANSIT ADMINISTRATION, U.S. DEPARTMENT OF TRANSPORTATION, UNDER THE URBAN MASS TRANSPORTATION ACT OF 1964, AS AMENDED, FOR THE PORT AUTHORITY OF ALLEGHENY COUNTY, PENNSYLVANIA.

COMMONWEALTH OF PENNSYLVANIA — REGISTERED PROFESSIONAL ENGINEER — PETER DENNIS MAURITZ — PE071953

SIGNATURE

DMJM HARRIS | AECOM
FOUR GATEWAY CENTER
20TH FLOOR
PITTSBURGH, PA. 15222

APPROVED — 11-2-05 DATE

DESIGNED	KAD
DRAWN	DC
CHECKED	PDM
IN CHARGE	PAR
DATE	NOV. 2, 2005
SCALE	1/8"=1'-0" (8' 4' 0 8')

PORT AUTHORITY OF ALLEGHENY COUNTY
PITTSBURGH PENNSYLVANIA

NORTH SHORE CONNECTOR
ALLEGHENY RIVER TUNNEL LAUNCH PIT TO RECEIVING PIT
LONGITUDINAL ELEVATION
STA L6024+00 TO STA L6026+00

PORT AUTHORITY

CONTRACT NO. NSC-003
DWG. NO. TN338 SHT. 87

10/25/2005 9:2
n:\nsf\final\gw\tunnel\profiles\03tn338.l.dgn

NOTES:

1. FOR GENERAL NOTES, SEE DRAWINGS TN100 & TN101.
2. SEE DRAWINGS TN843 TO TN845 FOR RIGHT TUNNEL ALIGNMENT AND PROFILE.
3. SEE DRAWING TN305, TN306 AND GEOTECHNICAL DATA REPORT FOR SOIL ROCK PROFILE INFORMATION.

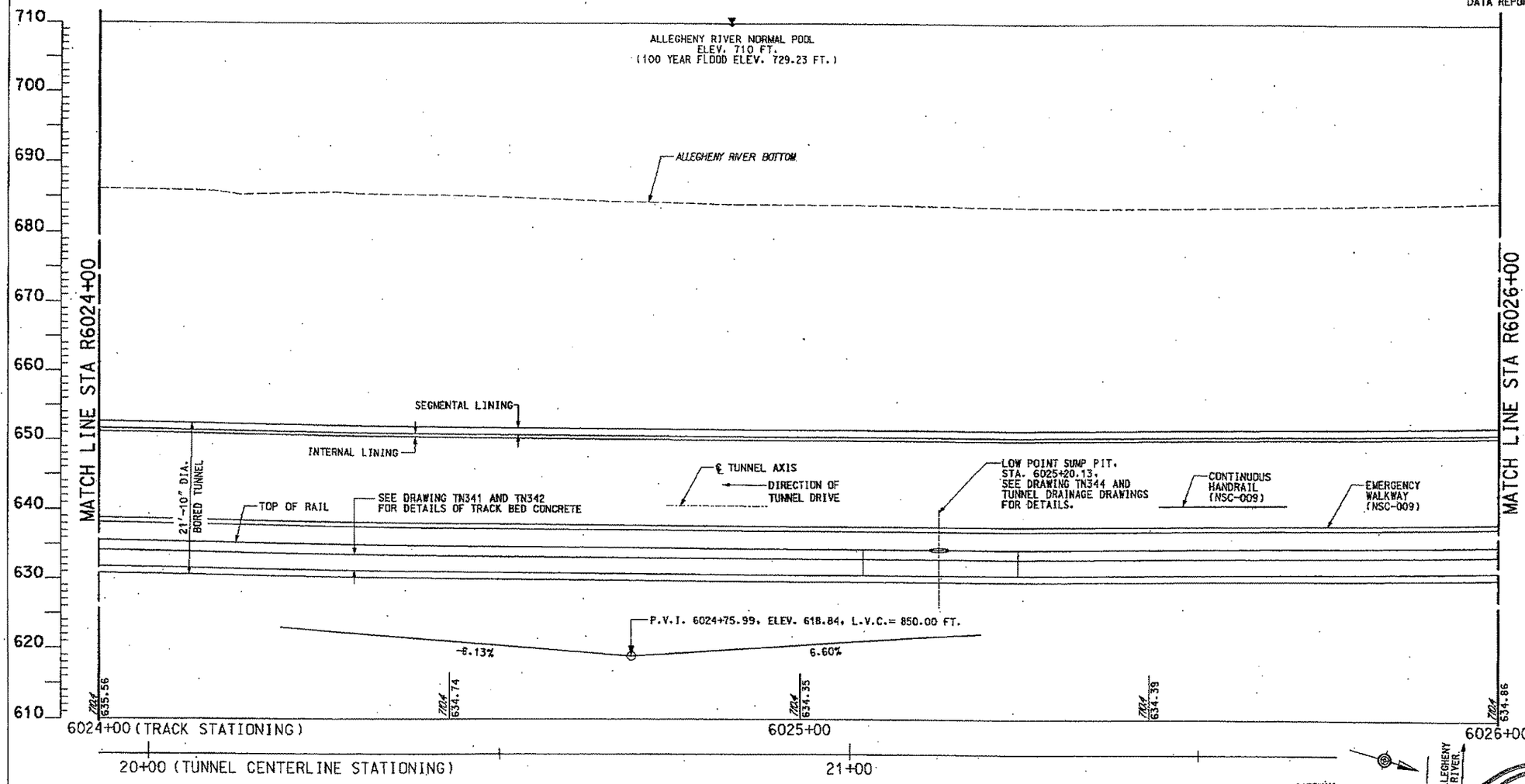

RIGHT TUNNEL LONGITUDINAL ELEVATION

STA R6024+00 TO STA R6026+00

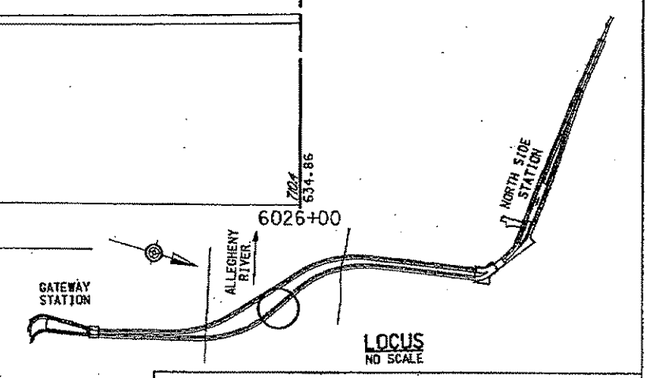

LOCUS
NO SCALE

NO.	DATE	DESCRIPTION

REVISIONS

THE PREPARATION OF THIS DOCUMENT HAS BEEN FINANCED IN PART THROUGH A GRANT FROM THE FEDERAL TRANSIT ADMINISTRATION, U.S. DEPARTMENT OF TRANSPORTATION, UNDER THE URBAN MASS TRANSPORTATION ACT OF 1964, AS AMENDED, FOR THE PORT AUTHORITY OF ALLEGHENY COUNTY, PENNSYLVANIA.

COMMONWEALTH OF PENNSYLVANIA REGISTERED PROFESSIONAL ENGINEER PETER DENNIS MAURITZ PE071183

SIGNATURE

DMJM HARRIS | AECOM
FOUR GATEWAY CENTER
20TH FLOOR
PITTSBURGH, PA. 15222

APPROVED — 11-2-05 DATE

DESIGNED	KAD
DRAWN	DC
CHECKED	PDM
IN CHARGE	PAR
DATE	NOV. 2, 2005
SCALE	1/8"=1'-0"

8' 4' 0 8'

PORT AUTHORITY OF ALLEGHENY COUNTY
PITTSBURGH PENNSYLVANIA

NORTH SHORE CONNECTOR
ALLEGHENY RIVER TUNNEL LAUNCH PIT TO RECEIVING PIT
LONGITUDINAL ELEVATION
STA R6024+00 TO STA R6026+00

PORT AUTHORITY

CONTRACT NO. NSC-003
DWG. NO. TN339 SHT. 88

10/25/2005 9:26:0
n:\nsf\fnal\pw\tunnel\profiles\03tn339_r.dgn

NOTES:

1. FOR GENERAL NOTES, SEE DRAWINGS TN100 & TN101.
2. SEE DRAWINGS TN840 TO TN842 FOR LEFT TUNNEL ALIGNMENT AND PROFILE. PROFILE INFORMATION IS GIVEN AT CENTERLINE OF TUNNEL AXIS.
3. SEE DRAWING TN305, TN306 AND GEOTECHNICAL DATA REPORT FOR SOIL ROCK PROFILE INFORMATION.

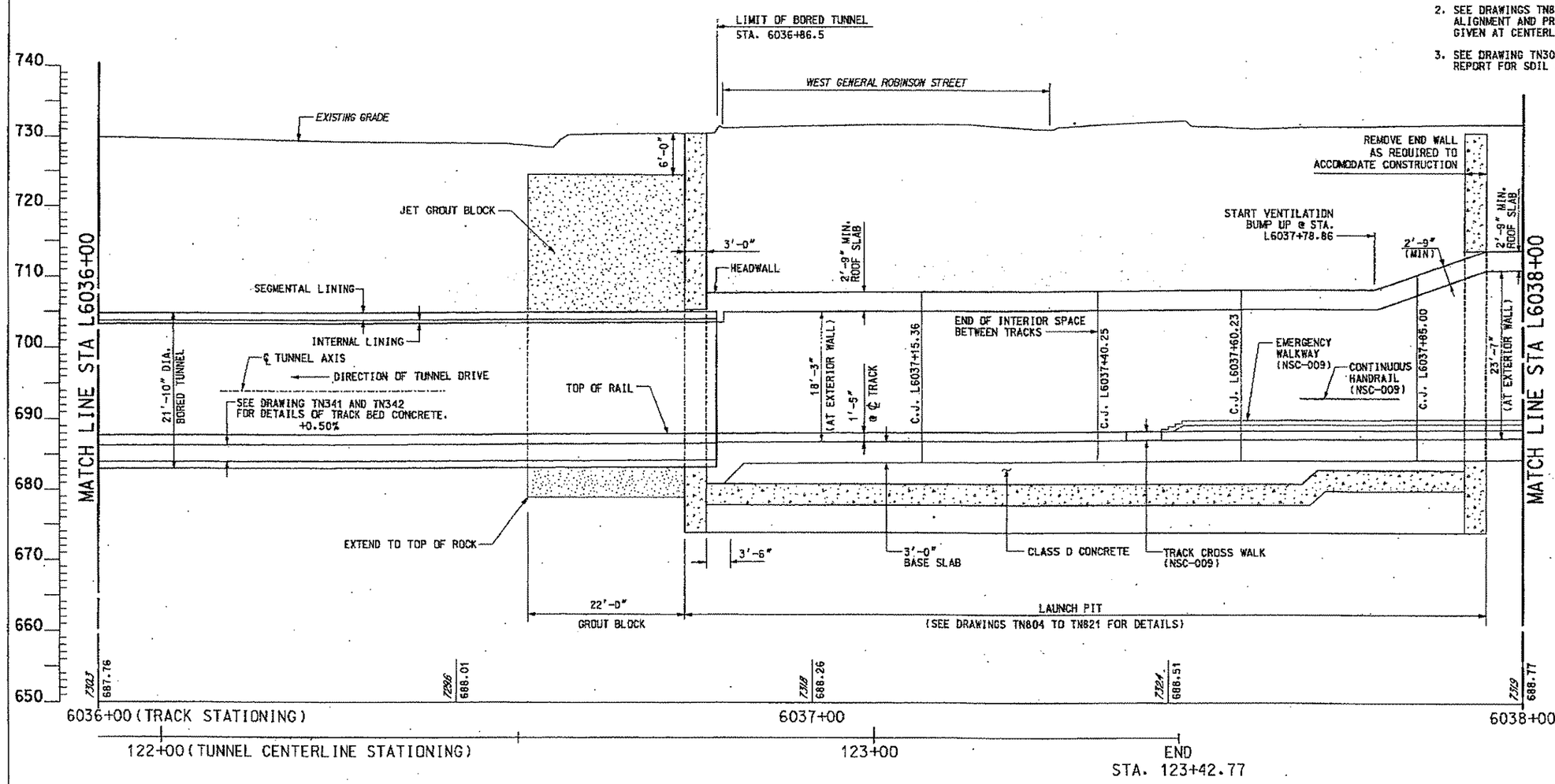

LEFT TUNNEL LONGITUDINAL ELEVATION

STA L6036+00 TO STA L6038+00

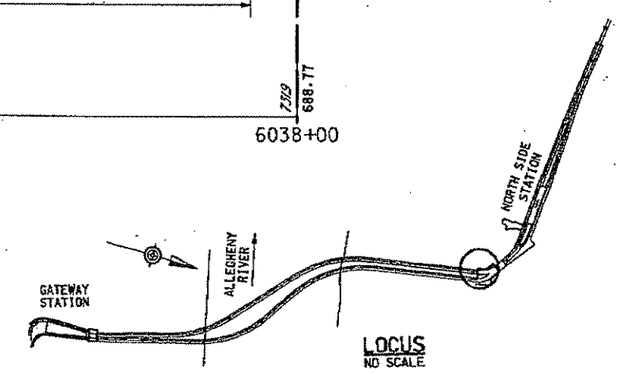

LOCUS
NO SCALE

NO.	DATE	DESCRIPTION

REVISIONS

THE PREPARATION OF THIS DOCUMENT HAS BEEN FINANCED IN PART THROUGH A GRANT FROM THE FEDERAL TRANSIT ADMINISTRATION, U.S. DEPARTMENT OF TRANSPORTATION, UNDER THE URBAN MASS TRANSPORTATION ACT OF 1964, AS AMENDED, FOR THE PORT AUTHORITY OF ALLEGHENY COUNTY, PENNSYLVANIA.

COMMONWEALTH OF PENNSYLVANIA REGISTERED PROFESSIONAL ENGINEER PETER DENNIS MAURITZ PE071163

SIGNATURE

DMJM HARRIS | AECOM
FOUR GATEWAY CENTER
20TH FLOOR
PITTSBURGH, PA. 15222

APPROVED — 11-2-05 DATE

DESIGNED	PDM
DRAWN	DC
CHECKED	KV
IN CHARGE	PAR
DATE	NOV. 2, 2005
SCALE	1/8"=1'-0"

PORT AUTHORITY OF ALLEGHENY COUNTY
PITTSBURGH PENNSYLVANIA

NORTH SHORE CONNECTOR
ALLEGHENY RIVER TUNNEL LAUNCH PIT TO RECEIVING PIT
LONGITUDINAL ELEVATION
STA L6036+00 TO STA L6038+00

PORT AUTHORITY

CONTRACT NO. NSC-003
DWG. NO. TN350 SHT. 99

10/25/2005 9:26:01
m:\nsc\Final\gen\tunnel\proFiles\03tn350.l.dgn

NOTES:

1. FOR GENERAL NOTES, SEE DRAWINGS TN100 & TN101.
2. SEE DRAWINGS TN843 TO TN845 FOR RIGHT BORED TUNNEL ALIGNMENT AND PROFILE. PROFILE INFORMATION IS GIVEN AT CENTERLINE OF TUNNEL AXIS.
3. SEE DRAWING TN305, TN306 AND GEOTECHNICAL DATA REPORT FOR SOIL ROCK PROFILE INFORMATION.

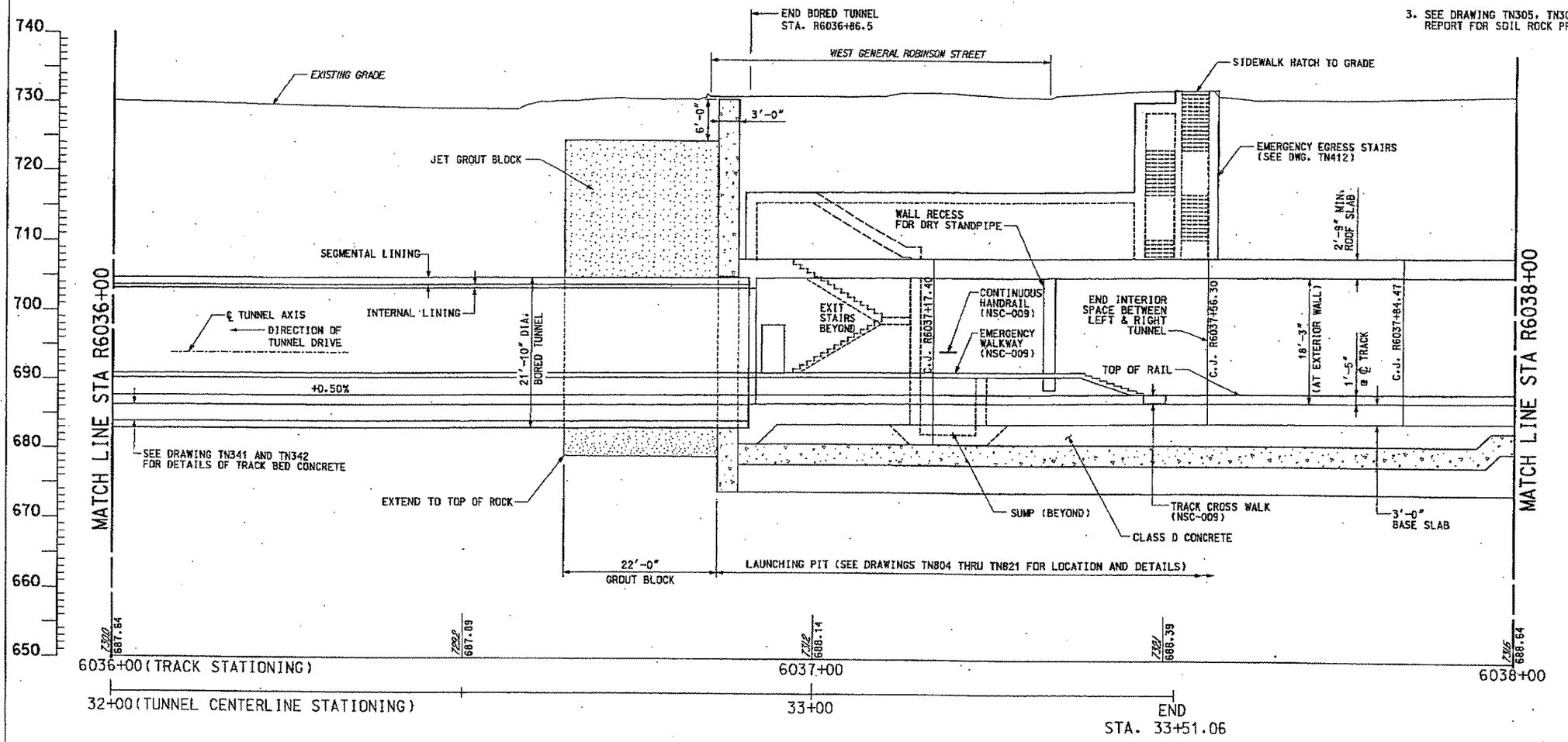

RIGHT TUNNEL LONGITUDINAL ELEVATION

STA R6036+00 TO STA R6038+00

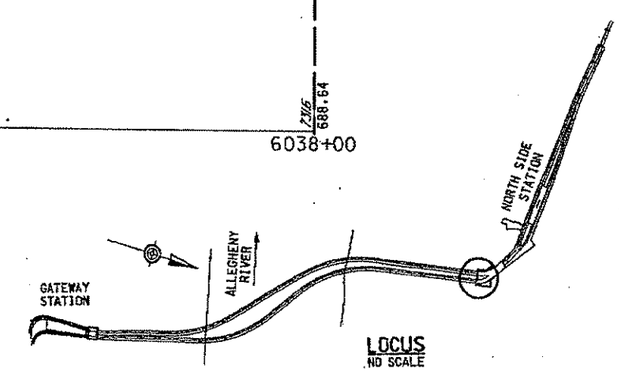

LOCUS
NO SCALE

NO.	DATE	DESCRIPTION

REVISIONS

THE PREPARATION OF THIS DOCUMENT HAS BEEN FINANCED IN PART THROUGH A GRANT FROM THE FEDERAL TRANSIT ADMINISTRATION, U.S. DEPARTMENT OF TRANSPORTATION, UNDER THE URBAN MASS TRANSPORTATION ACT OF 1964, AS AMENDED, FOR THE PORT AUTHORITY OF ALLEGHENY COUNTY, PENNSYLVANIA.

COMMONWEALTH OF PENNSYLVANIA REGISTERED PROFESSIONAL ENGINEER PETER DENNIS MAURITZ DRAWER PE071963

SIGNATURE

DMJM HARRIS | AECOM
FOUR GATEWAY CENTER
20TH FLOOR
PITTSBURGH, PA. 15222

APPROVED — 11-2-05 DATE

DESIGNED	PDM
DRAWN	DC
CHECKED	KV
IN CHARGE	PAR
DATE	NOV. 2, 2005
SCALE	1/8"=1'-0"

8' 4' 0 8'

PORT AUTHORITY OF ALLEGHENY COUNTY
PITTSBURGH PENNSYLVANIA

NORTH SHORE CONNECTOR
ALLEGHENY RIVER TUNNEL LAUNCH PIT TO RECEIVING PIT
LONGITUDINAL ELEVATION
STA R6036+00 TO STA R6038+00

PORT AUTHORITY

CONTRACT NO. NSC-003
DWG. NO. TN351 SHT. 100

10/25/2005 9:22AM
n:\nsf\final\gw\tunnel\profiles\03tn351_r.dgn

NOTES:

1. FOR GENERAL NOTES, SEE DRAWINGS TN101 & TN102.
2. SEE DRAWINGS TN840 TO TN842 FOR LEFT TUNNEL ALIGNMENT AND PROFILE. PROFILE INFORMATION IS GIVEN AT CENTERLINE OF TUNNEL AXIS.
3. SEE GEOTECHNICAL DATA REPORT FOR SOIL ROCK PROFILE INFORMATION.

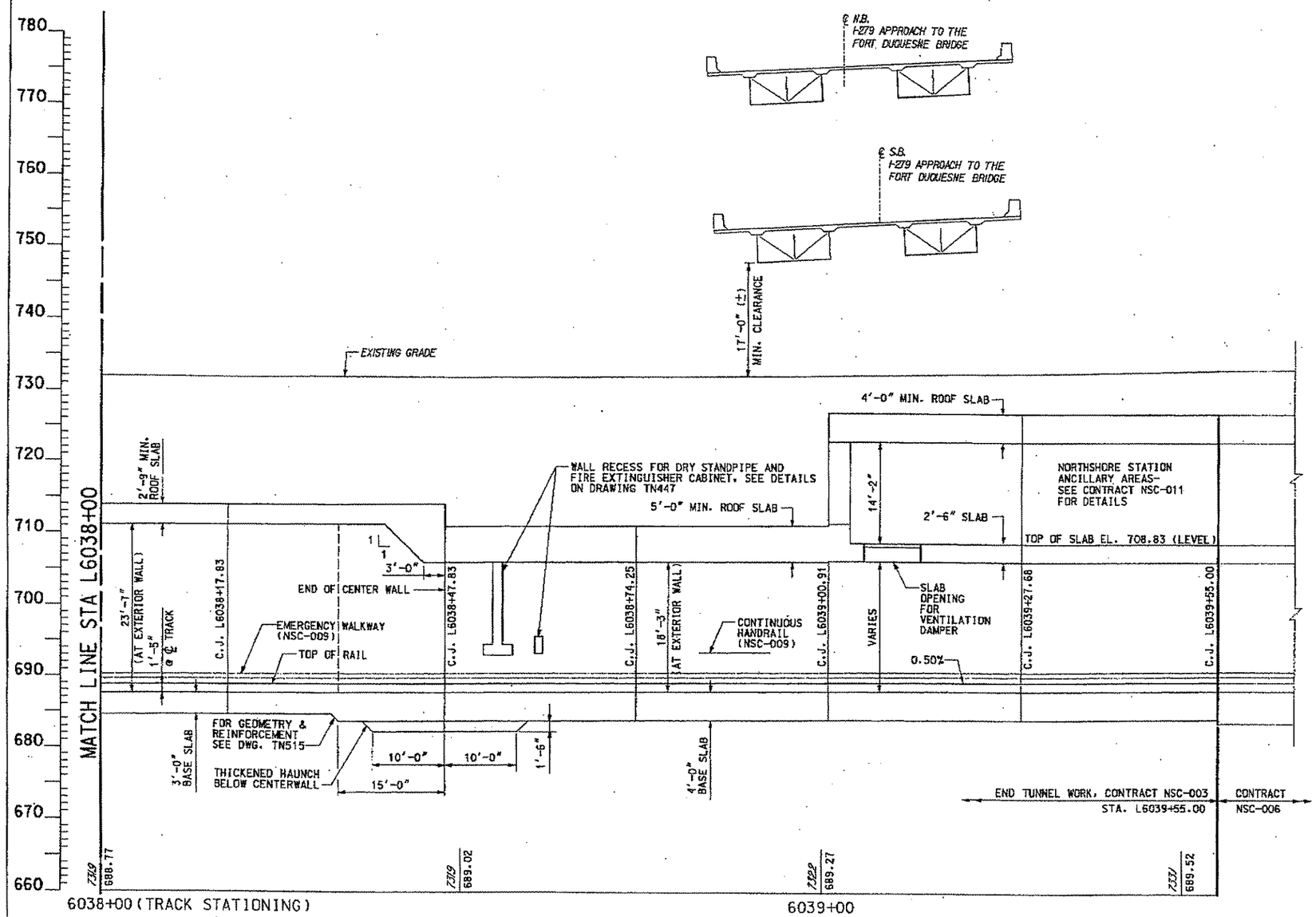

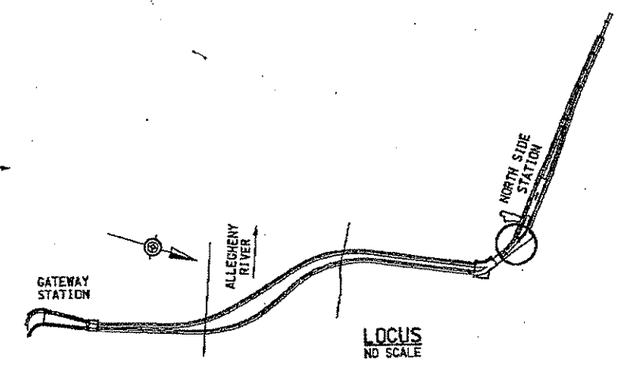

LEFT TUNNEL LONGITUDINAL ELEVATION

STA L6038+00 TO STA L6039+55.00

NO.	DATE	DESCRIPTION

REVISIONS

THE PREPARATION OF THIS DOCUMENT HAS BEEN FINANCED IN PART THROUGH A GRANT FROM THE FEDERAL TRANSIT ADMINISTRATION, U.S. DEPARTMENT OF TRANSPORTATION, UNDER THE URBAN MASS TRANSPORTATION ACT OF 1964, AS AMENDED, FOR THE PORT AUTHORITY OF ALLEGHENY COUNTY, PENNSYLVANIA.

COMMONWEALTH OF PENNSYLVANIA REGISTERED PROFESSIONAL ENGINEER PETER DENNIS MAURITZ PE071183

SIGNATURE

DMJM HARRIS | AECOM

FOUR GATEWAY CENTER
20TH FLOOR
PITTSBURGH, PA. 15222

APPROVED — DATE 11-2-05

DESIGNED	PDM
DRAWN	DC
CHECKED	KV
IN CHARGE	PAR
DATE	NOV. 2, 2005
SCALE	1/8"=1'-0" (8' 4' 0 8')

PORT AUTHORITY OF ALLEGHENY COUNTY
PITTSBURGH PENNSYLVANIA

NORTH SHORE CONNECTOR
ALLEGHENY RIVER TUNNEL LAUNCH PIT TO RECEIVING PIT
LONGITUDINAL ELEVATION
STA L6038+00 TO STA L6039+55.00

PORT AUTHORITY

CONTRACT NO. NSC-003
DWG. NO. TN352 SHT. 101

10/25/2005 9:26:00 AM
m:\dgn\final\pw\tunnel\profiles\03tn352_l.dgn

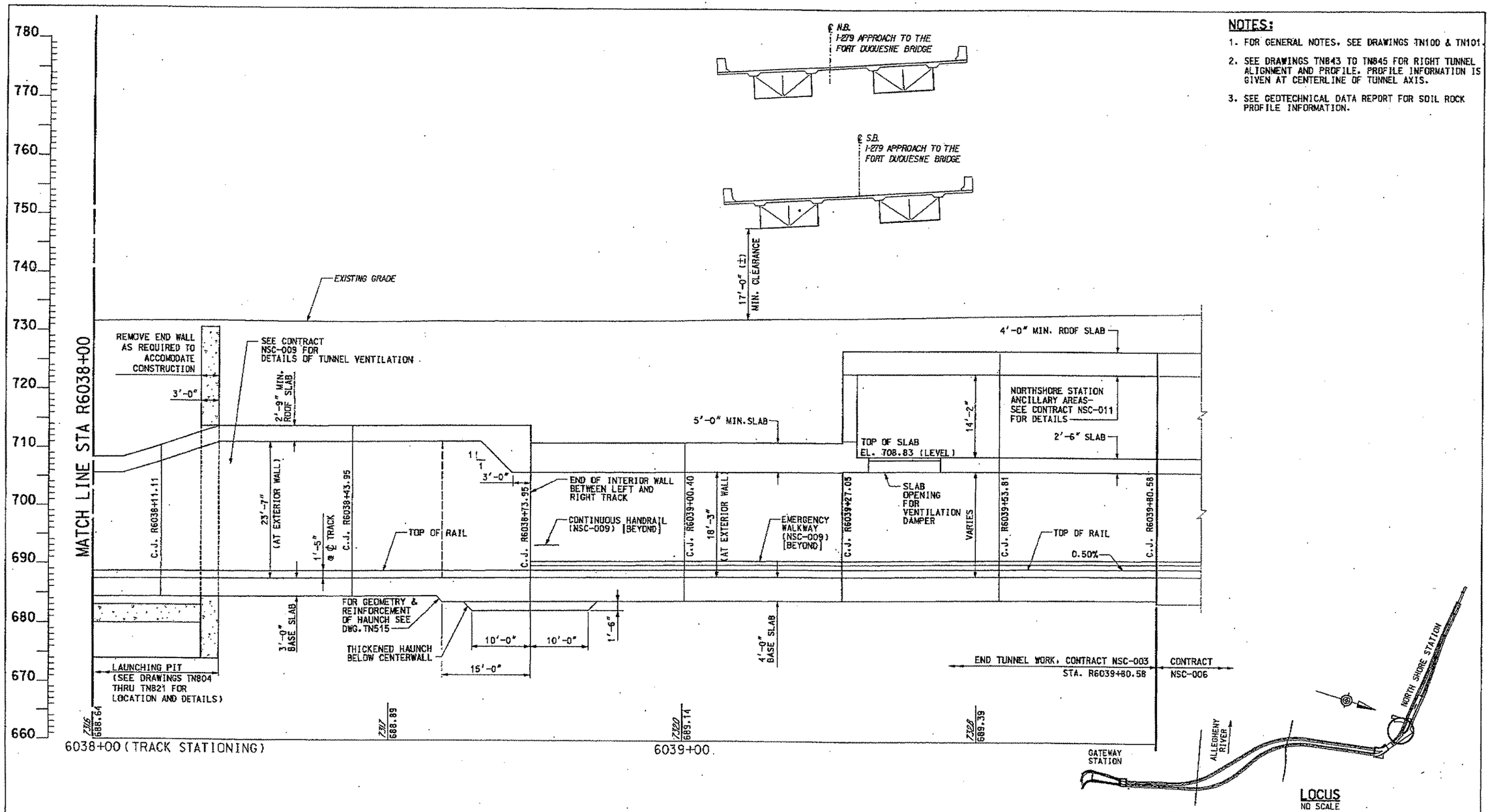

NOTES:

1. FOR GENERAL NOTES, SEE DRAWINGS TN100 & TN101.
2. SEE DRAWINGS TN843 TO TN845 FOR RIGHT TUNNEL ALIGNMENT AND PROFILE. PROFILE INFORMATION IS GIVEN AT CENTERLINE OF TUNNEL AXIS.
3. SEE GEOTECHNICAL DATA REPORT FOR SOIL ROCK PROFILE INFORMATION.

RIGHT TUNNEL LONGITUDINAL ELEVATION

STA R6038+00 TO STA R6039+80.58

NO.	DATE	DESCRIPTION

REVISIONS

THE PREPARATION OF THIS DOCUMENT HAS BEEN FINANCED IN PART THROUGH A GRANT FROM THE FEDERAL TRANSIT ADMINISTRATION, U.S. DEPARTMENT OF TRANSPORTATION, UNDER THE URBAN MASS TRANSPORTATION ACT OF 1964, AS AMENDED, FOR THE PORT AUTHORITY OF ALLEGHENY COUNTY, PENNSYLVANIA.

REGISTERED PROFESSIONAL ENGINEER PETER DENNIS MAURITZ PE071143 PENNSYLVANIA

SIGNATURE

DMJM HARRIS | AECOM
FOUR GATEWAY CENTER
20TH FLOOR
PITTSBURGH, PA. 15222

APPROVED — 11-2-05 DATE

DESIGNED	PDM
DRAWN	DC
CHECKED	KV
IN CHARGE	PAR
DATE	NOV. 2, 2005
SCALE	1/8"=1'-0"

8' 4' 0 8'

PORT AUTHORITY OF ALLEGHENY COUNTY
PITTSBURGH, PENNSYLVANIA

NORTH SHORE CONNECTOR
ALLEGHENY RIVER TUNNEL LAUNCH PIT TO RECEIVING PIT
LONGITUDINAL ELEVATION
STA R6038+00 TO STA R6039+80.58

PORT AUTHORITY

CONTRACT NO.	NSC-003		
DWG. NO.	TN353	SHT.	102

10/25/2005 9:26
m:\nsf\final\gw\tunnel\profiles\031n353_r.dgn

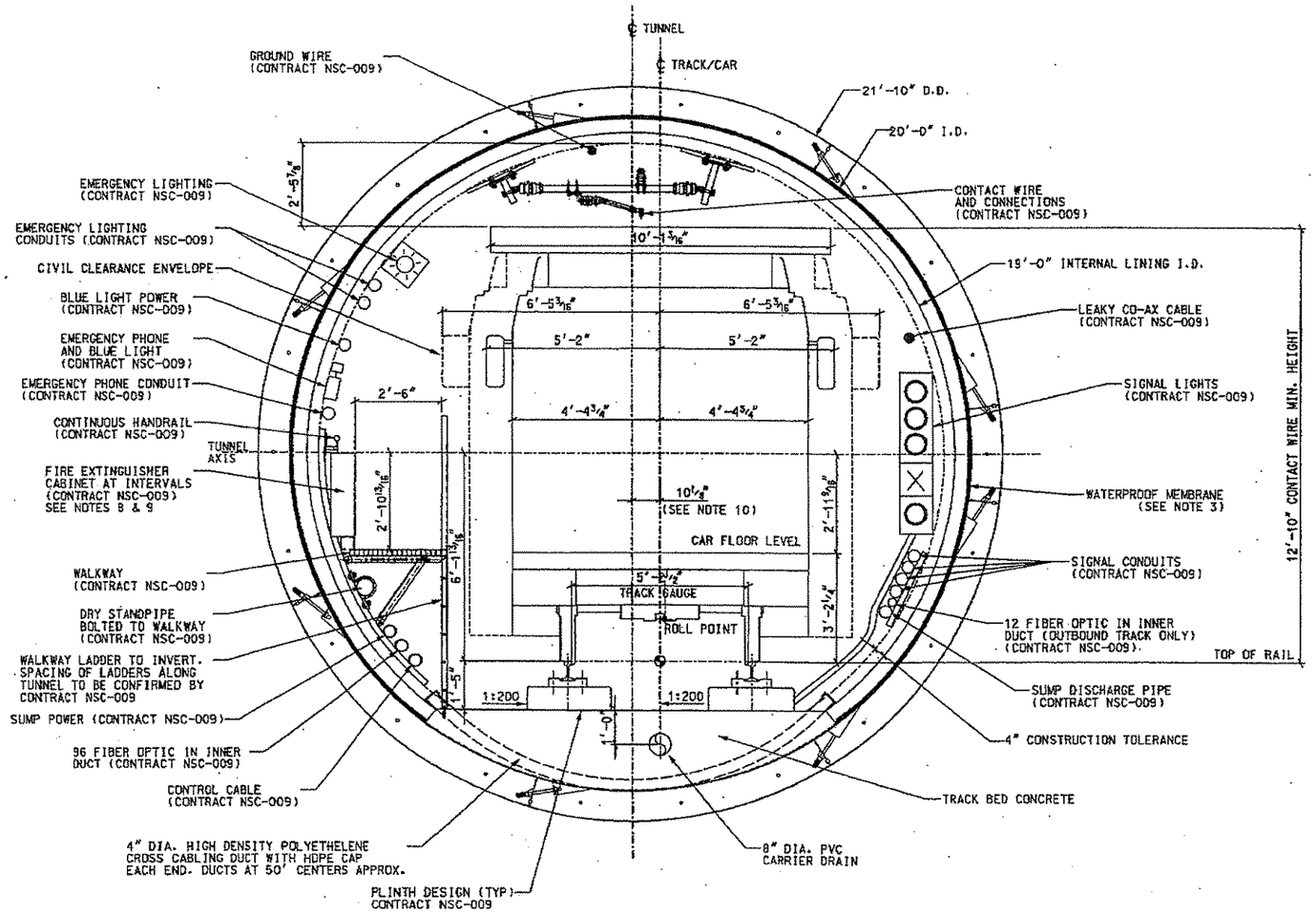

ZERO SUPERELEVATION
RIGHT TRACK SHOWN – LEFT TRACK SIMILAR BUT MIRRORED
DETAIL A

NOTES:

1. NOTE 1 NOT USED.
2. FOR GENERAL NOTES SEE DRAWING NOS. TN100 AND TN101
3. FOR DETAILS OF INTERNAL LINING AND WATERPROOFING REFER TO DRAWING NO. WP700
4. ⊗ TYPICAL SETTING-OUT POINT. HORIZONTAL ALIGNMENT IS CENTERLINE OF TRACK.
5. POSITION OF OVERHEAD CONTACT WIRE, TRAFFIC LIGHTS, CABLE BRACKETS, DISCHARGE PIPE, STANDPIPE, FIRE CABINET AND EMERGENCY LIGHTING SHOWN AS INDICATIVE ONLY. POSITIONS OF THESE ITEMS TO SUIT E&M, SIGNALLING AND SPACE REQUIREMENTS FURNISHED BY OTHERS.
6. PLINTHS AND RAILS TO BE INCLUDED IN NSC-009. TRACKBED AND MECHANICAL ANCHORAGES FOR PLINTHS TO BE INCLUDED IN CONTRACT NSC-003
7. WALKWAY EDGE TO TRACK CENTERLINE DIMENSION IS CONSTANT THROUGHOUT THE BORED TUNNEL.
8. UPON CONSTRUCTION OF THE SEGMENTAL BORED TUNNEL LINING AN AS BUILT SURVEY WILL BE PERFORMED. IF NO TRACK REALIGNMENT IS CARRIED OUT AND THERE IS INSUFFICIENT SPACE FOR THE FIRE FIGHTING CABINETS, THE INTERNAL LINING IS TO BE RECESSED LOCALLY TO SUIT. MAXIMUM RECESS TO BE ONE INCH DEEP BY LENGTH OF CABINET.
9. WALKWAY BETWEEN STA 6036+58 TO STA 6036+88 (LEFT TRACK ONLY) MAY NEED TO BE REDUCED IN WIDTH TO SUIT CLEARANCE ENVELOPE. NO FIRE FIGHTING CABINETS ARE LOCATED BETWEEN THESE STATIONINGS.
10. ON RIGHT TRACK THE TRACK TO TUNNEL OFFSET VARIES FROM 10 1/8" AT TUNNEL STA. R2T+74.524 TO 5 1/4" AT TUNNEL STA. R3O+68.172.
11. 4" CONSTRUCTION TOLERANCE INCLUDES:
    3" TBM DRIVE TOLERANCE AND
    1" BUILD TOLERANCE

FABER MAUNSELL | AECOM

NO.	DATE	DESCRIPTION

REVISIONS

THE PREPARATION OF THIS DOCUMENT HAS BEEN FINANCED IN PART THROUGH A GRANT FROM THE FEDERAL TRANSIT ADMINISTRATION, U.S. DEPARTMENT OF TRANSPORTATION, UNDER THE URBAN MASS TRANSPORTATION ACT OF 1964, AS AMENDED, FOR THE PORT AUTHORITY OF ALLEGHENY COUNTY, PENNSYLVANIA.

COMMONWEALTH OF PENNSYLVANIA REGISTERED PROFESSIONAL ENGINEER PETER DENNIS MAURITZ PE077163

SIGNATURE

DMJM HARRIS | AECOM
FOUR GATEWAY CENTER
20TH FLOOR
PITTSBURGH, PA. 15222

APPROVED — DATE 11-2-05

DESIGNED	SJW
DRAWN	BEJ
CHECKED	AJM
IN CHARGE	PAR
DATE	NOV. 2, 2005

SCALE 2' 1' 0 2'

PORT AUTHORITY OF ALLEGHENY COUNTY
PITTSBURGH PENNSYLVANIA

NORTH SHORE CONNECTOR
ALLEGHENY RIVER TUNNEL LAUNCH PIT TO RECEIVING PIT
BORED TUNNEL TYPICAL SECTION
ZERO SUPERELEVATION

PORT AUTHORITY

CONTRACT NO. NSC-003

DWG. NO. TN363 SHT. 1/1

NOTES:

1. NOTE 1 NOT USED.
2. FOR GENERAL NOTES SEE DRAWING NOS. TN100 AND TN101
3. FOR DETAILS OF INTERNAL LINING AND WATERPROOFING REFER TO DRAWING NO. WP700
4. ⊗ TYPICAL SETTING-OUT POINT. HORIZONTAL ALIGNMENT IS CENTERLINE OF TRACK.
5. POSITION OF OVERHEAD CONTACT WIRE, TRAFFIC LIGHTS, CABLE BRACKETS, DISCHARGE PIPE, STANDPIPE, FIRE CABINET AND EMERGENCY LIGHTING SHOWN AS INDICATIVE ONLY. POSITIONS OF THESE ITEMS TO SUIT E&M, SIGNALLING AND SPACE REQUIREMENTS FURNISHED BY OTHERS.
6. PLINTHS AND RAILS TO BE INCLUDED IN NSC-009. TRACKBED AND MECHANICAL ANCHORAGES FOR PLINTHS TO BE INCLUDED IN CONTRACT NSC-003
7. 4" CONSTRUCTION TOLERANCE INCLUDES:
   3" TBM DRIVE TOLERANCE AND
   1" BUILD TOLERANCE

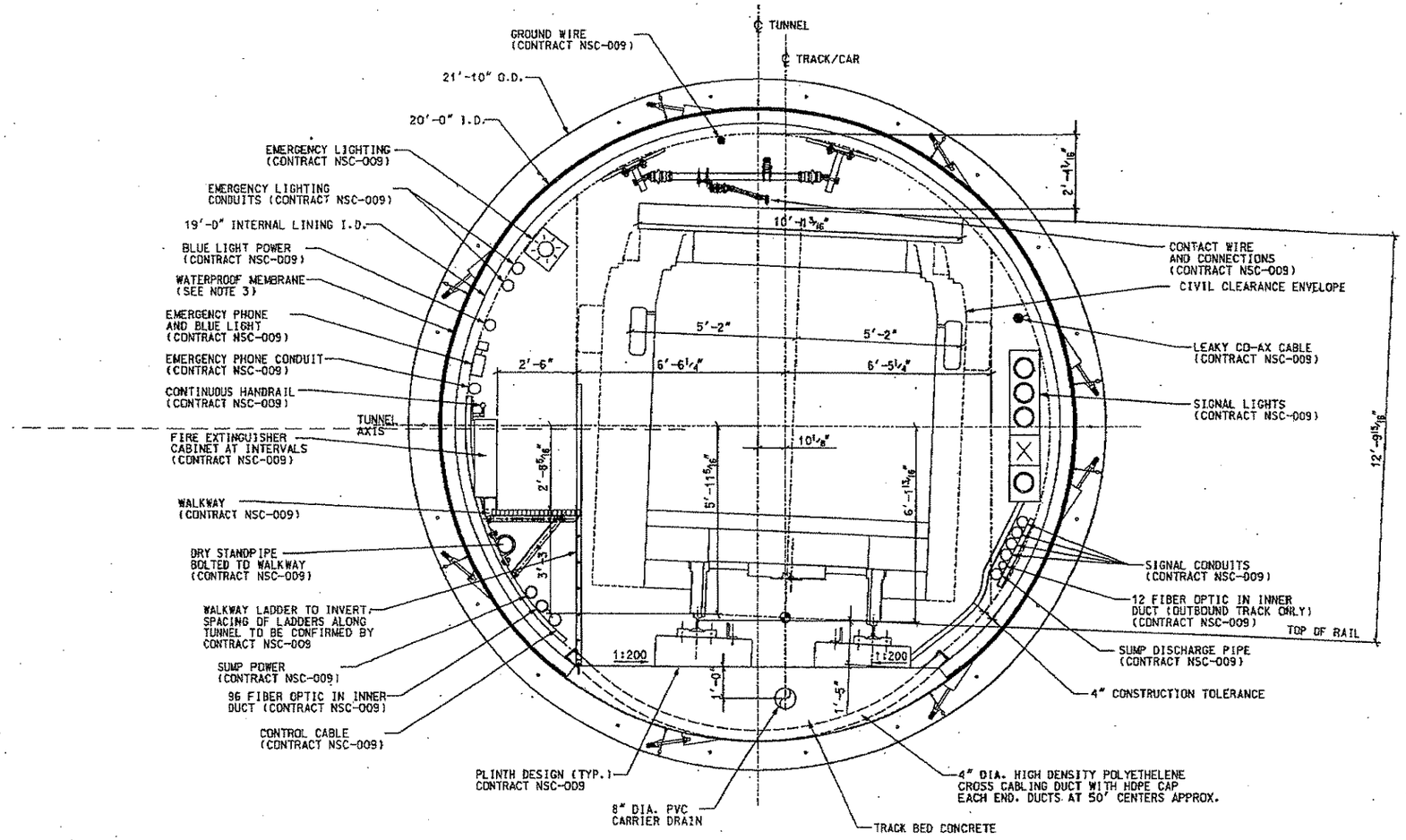

2 1/2" SUPERELEVATION - LEFT HAND CURVE
RIGHT TRACK SHOWN - LEFT TRACK SIMILAR BUT MIRRORED
DETAIL A

FABER MAUNSELL | AECOM

NO.	DATE	DESCRIPTION

REVISIONS

THE PREPARATION OF THIS DOCUMENT HAS BEEN FINANCED IN PART THROUGH A GRANT FROM THE FEDERAL TRANSIT ADMINISTRATION, U.S. DEPARTMENT OF TRANSPORTATION, UNDER THE URBAN MASS TRANSPORTATION ACT OF 1964, AS AMENDED, FOR THE PORT AUTHORITY OF ALLEGHENY COUNTY, PENNSYLVANIA.

REGISTERED PROFESSIONAL ENGINEER PETER DENNIS MAURITZ PE071163 PENNSYLVANIA

SIGNATURE

DMJM HARRIS | AECOM
FOUR GATEWAY CENTER
20TH FLOOR
PITTSBURGH, PA. 15222

APPROVED — DATE 11-2-05

DESIGNED	SJW
DRAWN	BEJ
CHECKED	AJH
IN CHARGE	PAR
DATE	NOV. 2, 2005
SCALE	2' 1' 0 2'

PORT AUTHORITY OF ALLEGHENY COUNTY
PITTSBURGH PENNSYLVANIA

NORTH SHORE CONNECTOR
ALLEGHENY RIVER TUNNEL LAUNCH PIT TO RECEIVING PIT
BORED TUNNEL TYPICAL SECTION
MAXIMUM LEFT HAND SUPERELEVATION SHOWING TRANSITION FROM ZERO

PORT AUTHORITY

CONTRACT NO. NSC-003
DWG. NO. TN364 SHT. 112

NOTES:

1. NOTE 1 NOT USED.
2. FOR GENERAL NOTES SEE DRAWING NOS. TN100 AND TN101
3. FOR DETAILS OF INTERNAL LINING AND WATERPROOFING REFER TO DRAWING NO. WP700
4. ⊗ TYPICAL SETTING-OUT POINT. HORIZONTAL ALIGNMENT IS CENTERLINE OF TRACK.
5. POSITION OF OVERHEAD CONTACT WIRE, TRAFFIC LIGHTS, CABLE BRACKETS, DISCHARGE PIPE, STANDPIPE, FIRE CABINET AND EMERGENCY LIGHTING SHOWN AS INDICATIVE ONLY. POSITIONS OF THESE ITEMS TO SUIT E&M, SIGNALLING AND SPACE REQUIREMENTS FURNISHED BY OTHERS.
6. PLINTHS AND RAILS TO BE INCLUDED IN NSC-009. TRACKBED AND MECHANICAL ANCHORAGES FOR PLINTHS TO BE INCLUDED IN CONTRACT NSC-003
7. 4" CONSTRUCTION TOLERANCE INCLUDES: 3" TBM DRIVE TOLERANCE AND 1" BUILD TOLERANCE

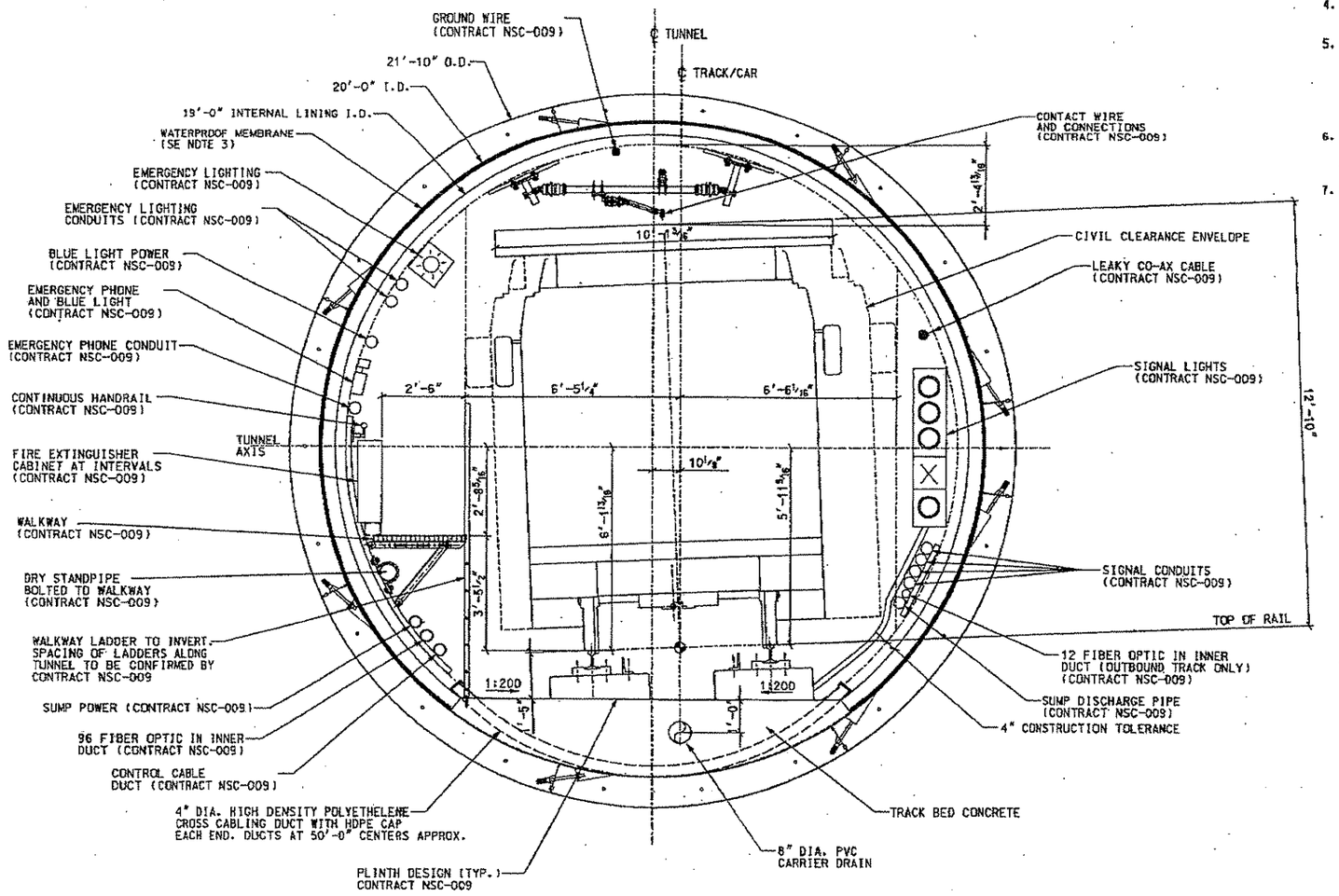

2 1/2" SUPERELEVATION – RIGHT HAND CURVE
RIGHT TRACK SHOWN – LEFT TRACK SIMILAR BUT MIRRORED

DETAIL A

FABER MAUNSELL | AECOM

NO.	DATE	DESCRIPTION

REVISIONS

THE PREPARATION OF THIS DOCUMENT HAS BEEN FINANCED IN PART THROUGH A GRANT FROM THE FEDERAL TRANSIT ADMINISTRATION, U.S. DEPARTMENT OF TRANSPORTATION, UNDER THE URBAN MASS TRANSPORTATION ACT OF 1964, AS AMENDED, FOR THE PORT AUTHORITY OF ALLEGHENY COUNTY, PENNSYLVANIA.

COMMONWEALTH OF PENNSYLVANIA REGISTERED PROFESSIONAL PETER DENNIS MAURITZ ENGINEER PE071183

SIGNATURE

DMJM HARRIS | AECOM
FOUR GATEWAY CENTER
20TH FLOOR
PITTSBURGH, PA. 15222

APPROVED — 11-2-05 DATE

DESIGNED	SJW
DRAWN	BEJ
CHECKED	AJM
IN CHARGE	PAR
DATE	NOV. 2, 2005
SCALE	2' 1' 0 2

PORT AUTHORITY OF ALLEGHENY COUNTY
PITTSBURGH PENNSYLVANIA

NORTH SHORE CONNECTOR
ALLEGHENY RIVER TUNNEL LAUNCH PIT TO RECEIVING PIT
BORED TUNNEL TYPICAL SECTION
MAXIMUM RIGHT HAND SUPERELEVATION SHOWING TRANSITION FROM ZERO

PORT AUTHORITY

CONTRACT NO. NSC-003
DWG. NO. TN365 SHT. 113

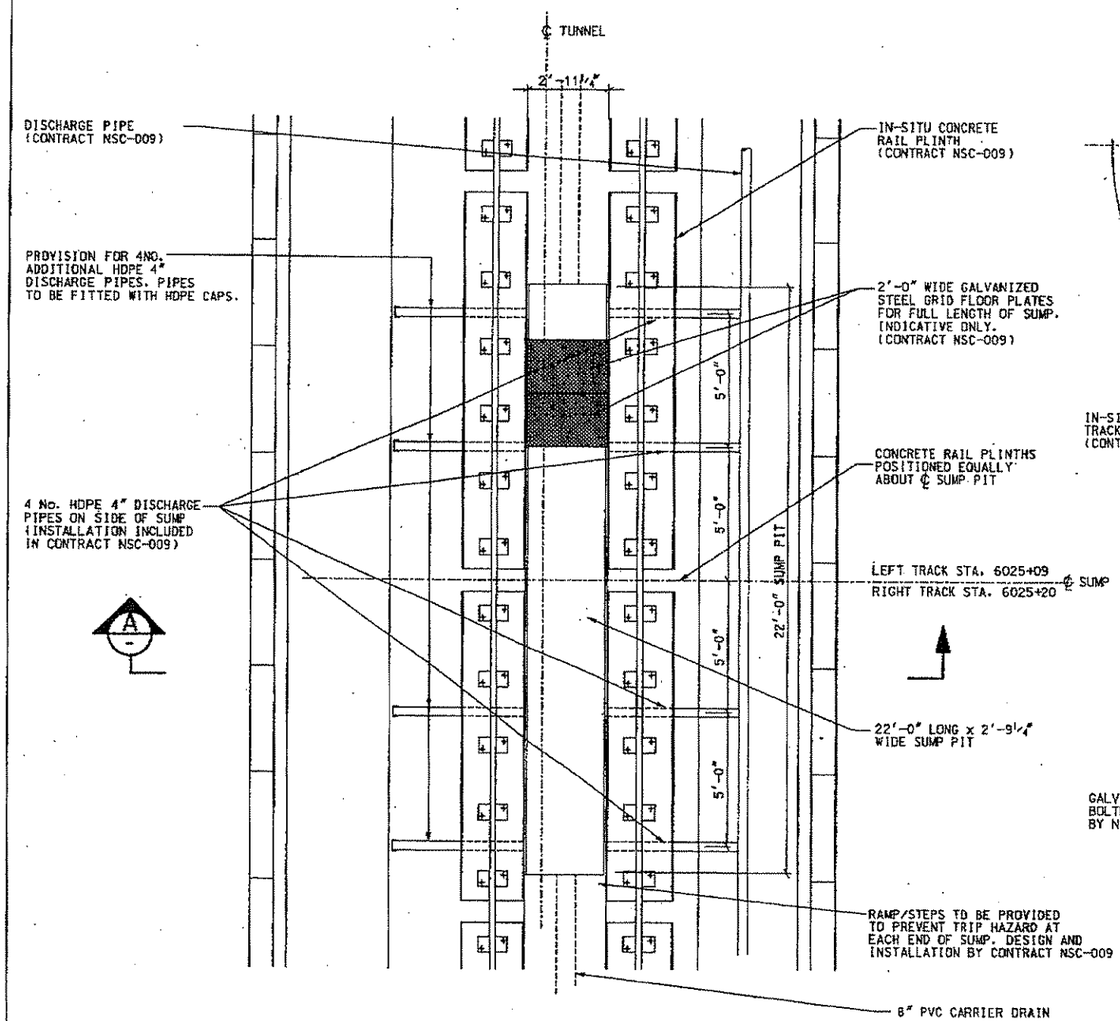

PARTIAL PLAN ON LOW-POINT SUMP PIT DETAIL 2 (TN317)

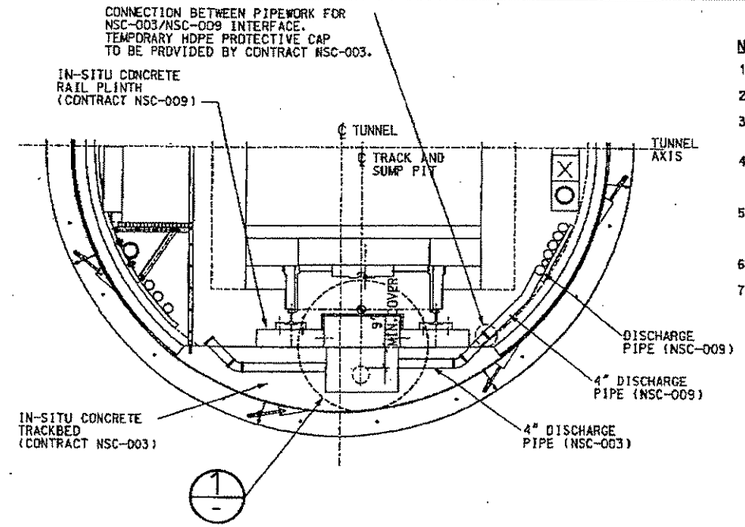

SECTION A

NOTES.

1. NOTE 1 NOT USED.
2. FOR GENERAL NOTES SEE DRAWING NOS. TN100 AND TN101.
3. FOR DETAILS OF REINFORCEMENT REFER TO DRAWING NO. TN379
4. ANY ADDITIONAL CONCRETE SCREED REQUIRED FOR DRAINAGE PURPOSES TO BE ADDED TO TRACKBED CONCRETE AS PART OF CONTRACT NSC-009.
5. INTERNAL DETAILS OF SUMP, INCLUDING ADDITIONAL CONCRETE SCREEDS, INTERNAL WALLS AND PUMPING EQUIPMENT ARE INCLUDED IN CONTRACT NSC-009.
6. PLINTHS AND RAILS TO BE INCLUDED IN CONTRACT NSC-009.
7. FOR LOCATION OF LOW POINT SUMP REFER TO TUNNEL DRAINAGE DRAWINGS NOS. PL300 TO PL304.

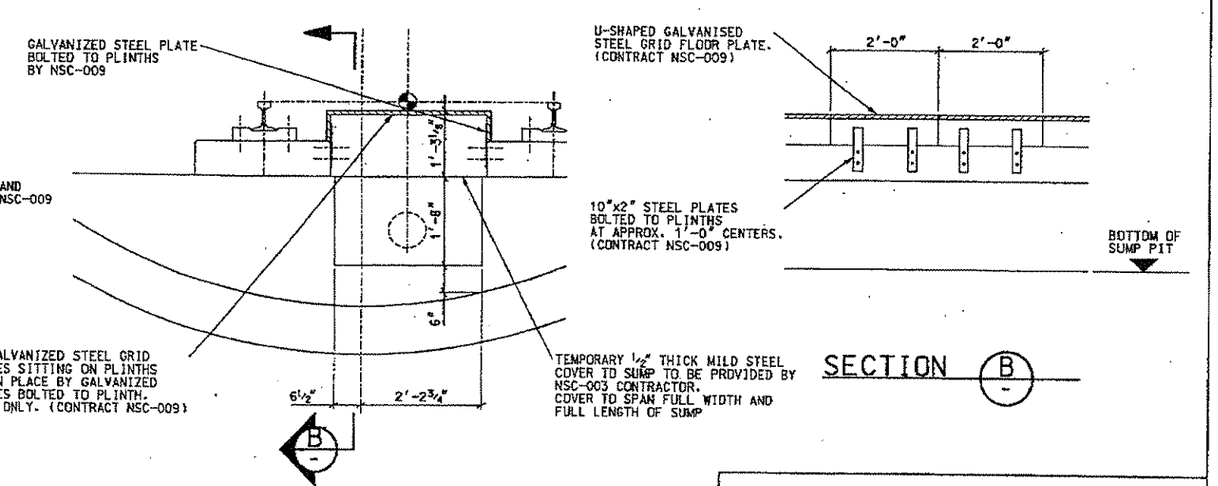

DETAIL 1

SECTION B

FABER MAUNSELL | AECOM

NO.	DATE	DESCRIPTION

REVISIONS

THE PREPARATION OF THIS DOCUMENT HAS BEEN FINANCED IN PART THROUGH A GRANT FROM THE FEDERAL TRANSIT ADMINISTRATION, U.S. DEPARTMENT OF TRANSPORTATION, UNDER THE URBAN MASS TRANSPORTATION ACT OF 1964, AS AMENDED. FOR THE PORT AUTHORITY OF ALLEGHENY COUNTY, PENNSYLVANIA.

COMMONWEALTH OF PENNSYLVANIA REGISTERED PROFESSIONAL ENGINEER PETER DENNIS MAURITZ PE071163

SIGNATURE

DMJM HARRIS | AECOM
FOUR GATEWAY CENTER
20TH FLOOR
PITTSBURGH, PA. 15222

APPROVED — 11-2-05 DATE

DESIGNED	SJW
DRAWN	BEJ
CHECKED	AJM
IN CHARGE	PAR
DATE	NOV. 2, 2005
SCALE	2' 1' 0 2'

PORT AUTHORITY OF ALLEGHENY COUNTY
PITTSBURGH PENNSYLVANIA

NORTH SHORE CONNECTOR
ALLEGHENY RIVER TUNNEL LAUNCH PIT TO RECEIVING PIT
LOW POINT SUMP
GENERAL ARRANGEMENT

PORT AUTHORITY

CONTRACT NO. NSC-003
DWG. NO. TN378 SHT. 124

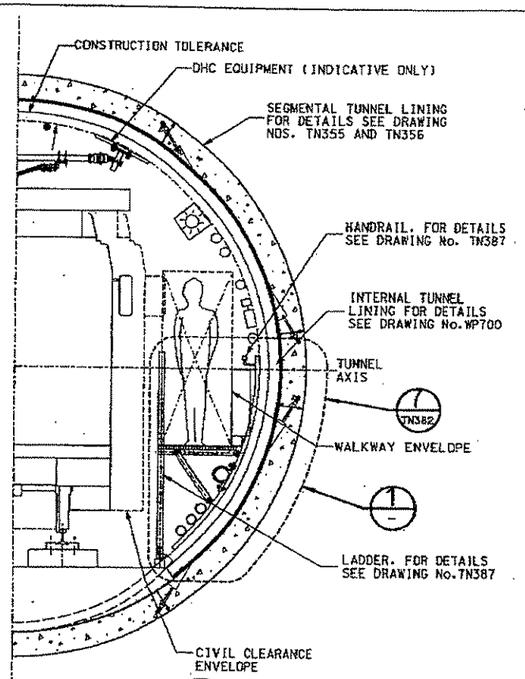

SECTION A

WALKWAY AND HANDRAIL
TYPICAL SECTION

SCALE 3/8" = 1-0'

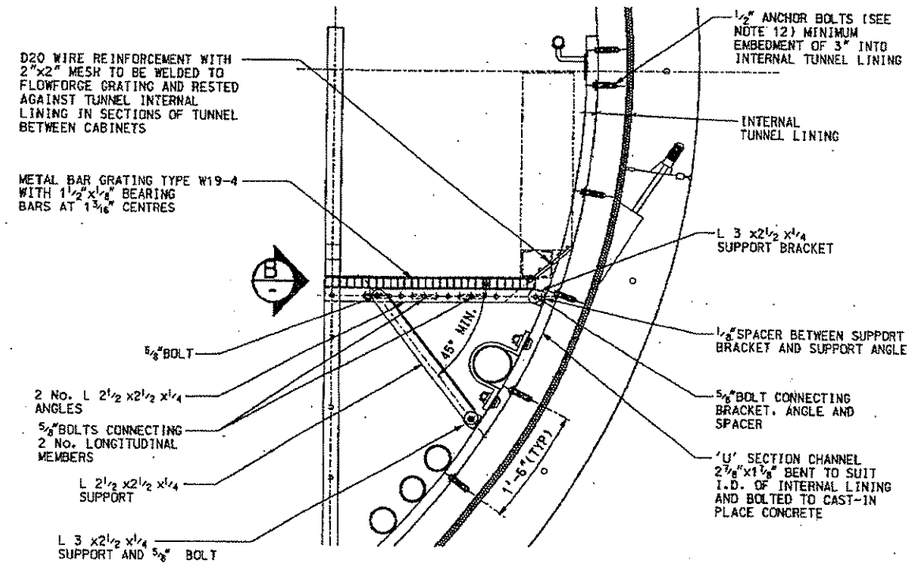

DETAIL 1

TYPICAL CROSS SECTION OF
WALKWAY UNIT

SCALE: 1" = 1-0'

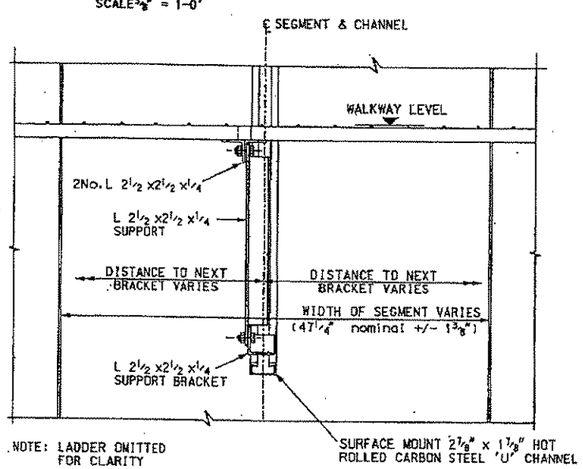

ELEVATION B

SCALE 1 1/2" = 1-0'

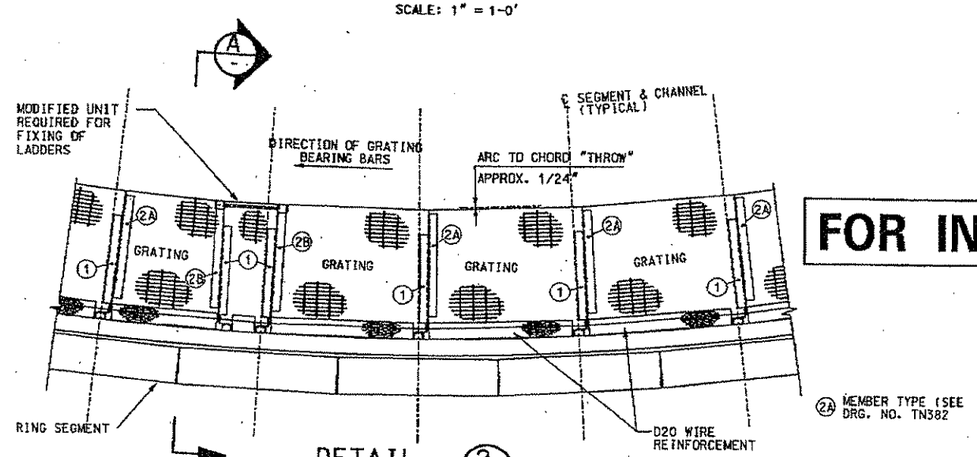

DETAIL 2

TYPICAL PLAN ON WALKWAY

FOR MINIMUM HORIZONTAL RADIUS OF 600'.
(N.T.S.)

NOTES.

1. NOTE 1 NOT USED.
2. FOR GENERAL NOTES SEE DRAWING NOS. TN100 AND TN101.
3. THIS DRAWING TO BE READ IN CONJUNCTION WITH DRAWING No. TN382.
4. ALL STEEL TO BE HOT DIPPED GALVANIZED TO AASHTO M270 (ASTM A709).
5. ALL STEEL NUTS, BOLTS & SCREWS TO BE SPUN GALVANISED EXCEPT WHERE NOTED. ALL WASHERS TO BE SPLIT WASHERS IN HARDENED STEEL AND GALVANISED.
6. THE HEIGHT OF THE WALKWAY IN RELATION TO THE TUNNEL AXIS VARIES WITH SUPERELEVATION. THE CHANNEL PROVIDES THE NECESSARY ADJUSTMENT TO ACCOMMODATE THIS.
7. LATERAL ADJUSTMENT OF THE DECK IS PROVIDED BY A COMBINATION OF SLOTS AND HOLES IN THE HORIZONTAL ANGLES. THE DIAGONAL BRACING ANGLE IS TO BE BOLTED TO HORIZONTAL ANGLES THROUGH ONE OF THE TWO FRONT HOLES. THE ANGLES SHOULD THEN BE BOLTED TOGETHER THROUGH REMAINING SLOTS AND HOLES.
8. L 3 x2 1/2 x1/4 BRACKETS ARE CLAMPED TO CHANNEL WITH NIBBED T-HEAD BOLTS. SEE DETAILS 4 & 5 ON DRAWING. No. TN382.
9. FOR STEELWORK DETAILS SEE DRAWING No.TN382.
10. METAL BAR GRATINGS TO BE MANUFACTURED TO ANSI/NAAMM MBG 531-00.
11. CARBON STEEL 'U' CHANNEL TO BE TO ASTM A283 TO WITHSTAND MAXIMUM ALLOWABLE UDL OF 6679lbs/ft AND MAXIMUM ALLOWABLE POINT LOAD, PULL OUT OR SHEAR = 7850lbs.
12. ANCHOR BOLTS TO BE TO ASTM A307 WITH MINIMUM TENSILE STRENGTH = 60Ksi
    IN PLACE ANCHOR BOLTS TO BE ABLE TO WITHSTAND
    ALLOWABLE TENSILE LOAD = 1575lbs
    ALLOWABLE SHEAR LOAD = 1980lbs.
13. MAXIMUM DEPTH OF EMBEDMENT FOR FIXINGS INTO INTERNAL LINING TO BE 3 1/2" TO PREVENT DAMAGE TO TUNNEL WATERPROOFING SYSTEM.
14. STRUCTURAL BOLTS TO BE TO ASTM A325 WITH MINIMUM TENSILE STRENGTH = 120Ksi.
15. MANUFACTURER APPROVED NOSING TO BE USED ON GRATING AT THE HEAD OF THE LADDER.
16. CARE SHOULD BE TAKEN BY THE NSC-009 CONTRACTOR WHEN INSTALLING TUNNEL WALKWAY AND SERVICES TO AVOID CONTROL AND GROUTING PIPES CAST INTO THE TUNNEL INTERNAL LINING.
17. WALKWAY AND LADDERS TO BE INCLUDED IN CONTRACT NSC-009.

FOR INFORMATION ONLY

FABER MAUNSELL | AECOM

NO.	DATE	DESCRIPTION

REVISIONS

THE PREPARATION OF THIS DOCUMENT HAS BEEN FINANCED IN PART THROUGH A GRANT FROM THE FEDERAL TRANSIT ADMINISTRATION, U.S. DEPARTMENT OF TRANSPORTATION, UNDER THE URBAN MASS TRANSPORTATION ACT OF 1964, AS AMENDED. FOR THE PORT AUTHORITY OF ALLEGHENY COUNTY, PENNSYLVANIA.

COMMONWEALTH OF PENNSYLVANIA REGISTERED PROFESSIONAL ENGINEER PETER DENNIS MAURITZ PE027163

SIGNATURE

DMJM HARRIS | AECOM
FOUR GATEWAY CENTER
20TH FLOOR
PITTSBURGH, PA. 15222

APPROVED — DATE 11-2-05

DESIGNED	SJW
DRAWN	GKR
CHECKED	AJM
IN CHARGE	PAR
DATE	NOV. 2, 2005
SCALE	AS SHOWN

PORT AUTHORITY OF ALLEGHENY COUNTY
PITTSBURGH PENNSYLVANIA

NORTH SHORE CONNECTOR
ALLEGHENY RIVER TUNNEL LAUNCH PIT TO RECEIVING PIT
EMERGENCY WALKWAY. GENERAL ARRANGEMENT
SHEET 1 OF 2

PORT AUTHORITY

CONTRACT NO. NSC-003
DWG. NO. TN381 SHT. 1 OF 2

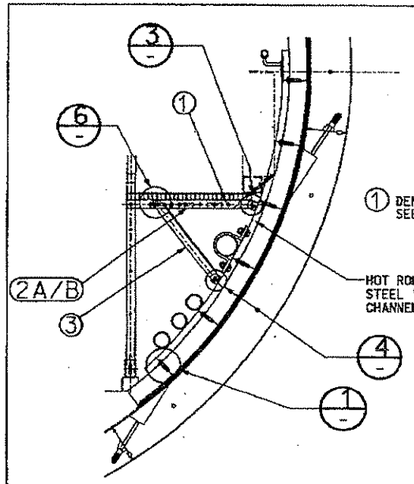

KEY SECTION THROUGH WALKWAY SHOWING SUPPORT DETAIL 7 (TN381)

NTS

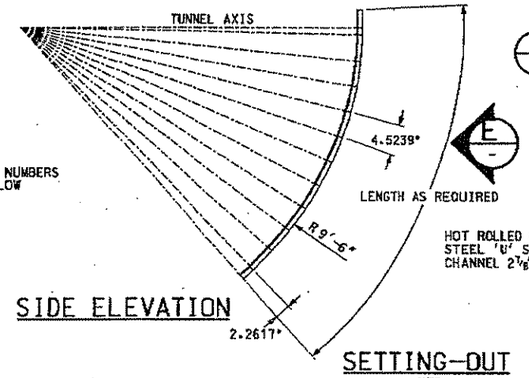

SIDE ELEVATION

SETTING-OUT

NTS

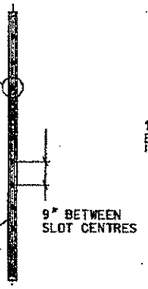

FRONT ELEVATION E

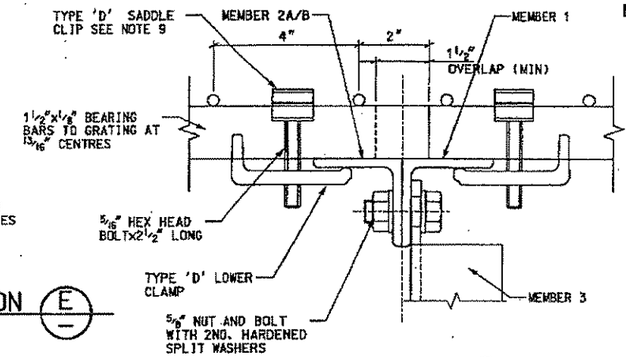

DETAIL 6

SCALE 6" = 1-0'

NOTES:

1. NOTE 1 NOT USED.
2. ALL CUTTING, DRILLING AND WELDING OF STEELWORK TO BE CARRIED OUT PRIOR TO HOT DIP GALVANISATION.
3. FOR GENERAL NOTES SEE DRAWING NOS. TN100 AND TN101.
4. ALL WELDS TO BE 1/4" CONTINUOUS FILLETS UNLESS OTHERWISE NOTED.
5. THIS DRAWING IS TO BE READ IN CONJUNCTION WITH DRAWING NO. TN381
6. ANCHOR BOLTS TO BE TO ASTM A307 WITH MINIMUM TENSILE STRENGTH = 60KSI
   IN PLACE ANCHOR BOLTS TO BE ABLE TO WITHSTAND
   ALLOWABLE TENSILE LOADING = 1575lbs
   ALLOWABLE SHEAR LOAD = 1960lbs
7. FIXINGS TO BE AS SHOWN OR AS PER CHOSEN MANUFACTURERS TYPICAL DETAILS
8. MAXIMUM DEPTH OF EMBEDMENT FOR FIXINGS INTO INTERNAL LINING TO BE 3 1/2" TO PREVENT DAMAGE TO TUNNEL WATERPROOFING SYSTEM
9. WALKWAY AND LADDERS TO BE INCLUDED IN CONTRACT NSC-009.

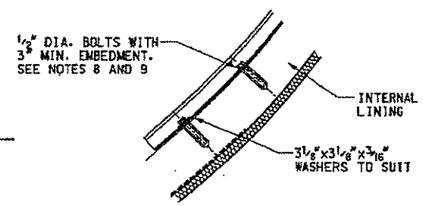

DETAIL 1

N.T.S.

CHANNEL PACKING TO ACCOMMODATE IRREGULARITIES IN LINING (WHERE REQUIRED)

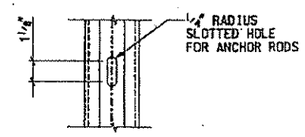

DETAIL 2

SCALE 3" = 1-0'

FOR INFORMATION ONLY

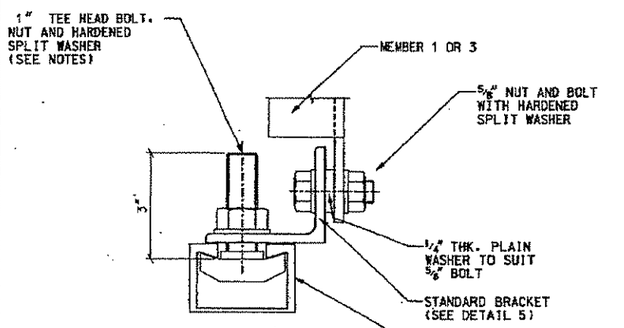

DETAIL 3

DETAIL 4 SIMILAR

SCALE 6" = 1-0'

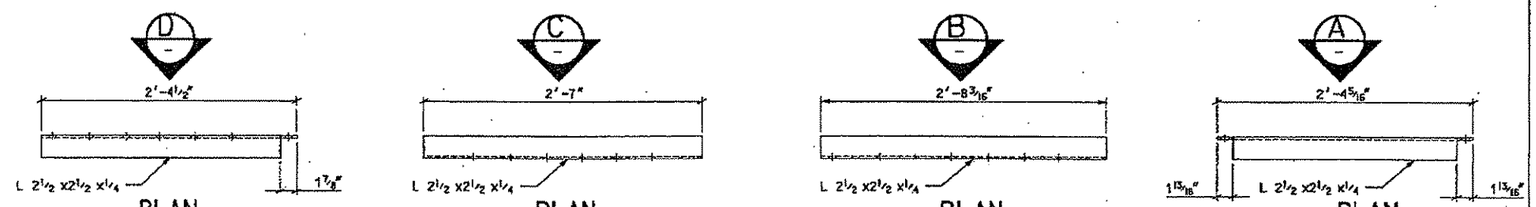

PLAN MEMBER 1

FINISH: ALL COMPONENTS TO BE HOT DIP GALVANISED.

PLAN MEMBER 2A

AT NON LADDER POSITIONS ONLY.

PLAN MEMBER 2B

2 NO. AT LADDER POSITIONS ONLY (1 NO. HANDED) REPLACES MEMBER 2A

PLAN MEMBER 3

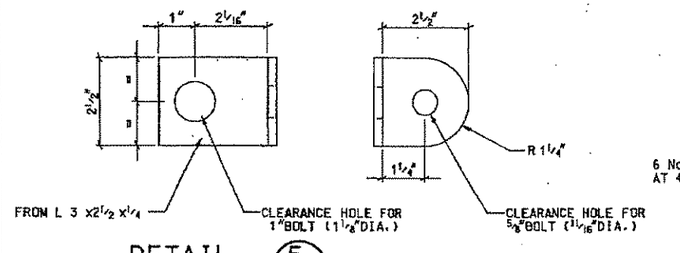

DETAIL 5

SCALE 6" = 1-0'

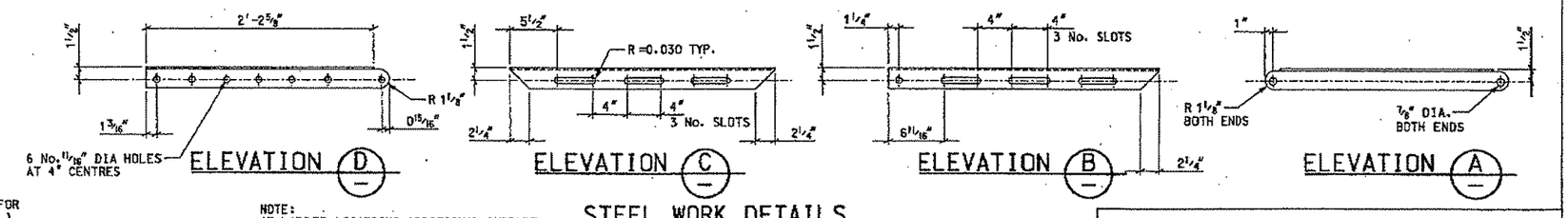

ELEVATION D

ELEVATION C

ELEVATION B

ELEVATION A

NOTE:
AT LADDER LOCATIONS ADDITIONAL SUPPORT MEMBERS 1, 2B AND 3 ARE TO BE PROVIDED EITHER SIDE OF LADDER. ONE SET TO BE HANDED. SEE TYPICAL PLAN ON DRG. NO. TN381

STEEL WORK DETAILS

SCALE 1 1/2" = 1-0'

FABER MAUNSELL | AECOM

NO.	DATE	DESCRIPTION

REVISIONS

THE PREPARATION OF THIS DOCUMENT HAS BEEN FINANCED IN PART THROUGH A GRANT FROM THE FEDERAL TRANSIT ADMINISTRATION, U.S. DEPARTMENT OF TRANSPORTATION, UNDER THE URBAN MASS TRANSPORTATION ACT OF 1964, AS AMENDED, FOR THE PORT AUTHORITY OF ALLEGHENY COUNTY, PENNSYLVANIA.

REGISTERED PROFESSIONAL ENGINEER PETER DENNIS MAURITZ PE071183 COMMONWEALTH OF PENNSYLVANIA

SIGNATURE

DMJM HARRIS | AECOM
FOUR GATEWAY CENTER
20TH FLOOR
PITTSBURGH, PA. 15222

APPROVED 11-2-05 DATE

DESIGNED	SJW
DRAWN	GKR
CHECKED	AJM
IN CHARGE	PAR
DATE	NOV. 2, 2005
SCALE	AS SHOWN

PORT AUTHORITY OF ALLEGHENY COUNTY
PITTSBURGH PENNSYLVANIA

NORTH SHORE CONNECTOR
ALLEGHENY RIVER TUNNEL LAUNCH PIT TO RECEIVING PIT
EMERGENCY WALKWAY GENERAL ARRANGEMENT
SHEET 2 OF 2

PORT AUTHORITY

CONTRACT NO. NSC-003
DWG. NO. TN382 SHT. 127

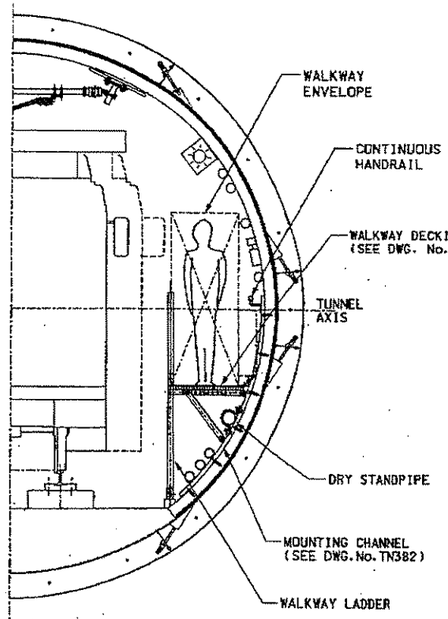

TYPICAL TUNNEL CROSS SECTION (C)

SCALE 3/8" = 1-0'

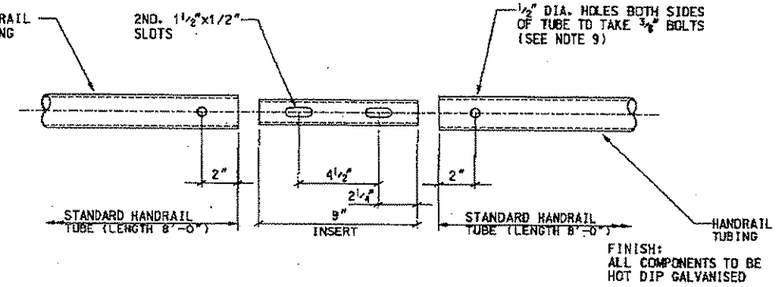

HANDRAIL JOINT DETAIL (2)

SCALE 3" = 1-0'

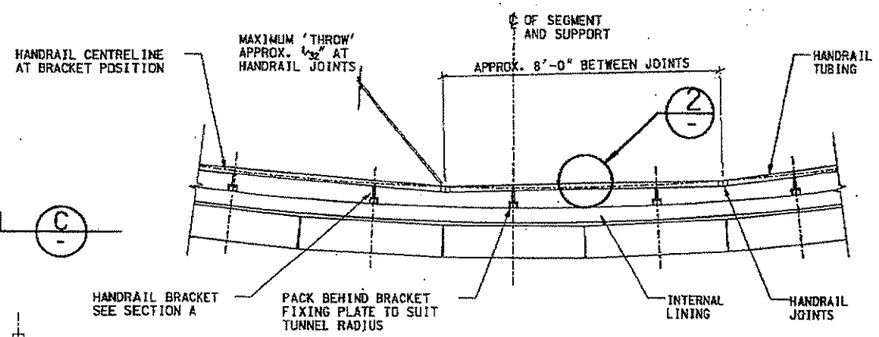

PLAN ON HANDRAIL FOR 600' TUNNEL RADIUS

NTS

NOTES:

1. NOTE 1 NOT USED.
2. ALL CUTTING, DRILLING AND WELDING OF STEELWORK TO BE CARRIED OUT PRIOR TO HOT DIP GALVANIZATION WHEREVER POSSIBLE.
3. FOR GENERAL NOTES SEE DRAWING NOS. TN100 AND TN101.
4. ALL WELDS TO BE 1/4" CONTINUOUS FILLETS UNLESS OTHERWISE NOTED.
5. HANDRAIL TO BE GRADE B SEAMLESS HOT DIPPED GALVANIZED STEEL PIPE TO ASTM A53.
6. CHANNEL TO BE HOT ROLLED CARBON STEEL 'U' SECTION CHANNEL 2 1/8"x1 7/8" TO ASTM A283.
7. ALL STEELWORK TO BE HOT DIPPED GALVANIZED TO AASHTO.M270 (ASTM A709) UNLESS NOTED OTHERWISE.
8. TEE BOLTS TO HAVE:
   ALLOWABLE TENSION LOAD = 15050lbs
   ALLOWABLE SHEAR LOAD = 10050lbs
   ALLOWABLE SLIP LOAD = 2550lbs
9. TUBING TO HAVE 1/2" DIA HOLES ON BOTH SIDES TO ALLOW 3/8" BOLT TO BE THREADED THROUGH AND FINGER TIGHTENED. A 1/2" GAP SHOULD BE LEFT BETWEEN ADJACENT STANDARD LENGTHS OF TUBE.
10. MAXIMUM DEPTH OF EMBEDMENTS FOR FIXINGS INTO INTERNAL LINING TO BE 3 1/2" TO PREVENT DAMAGE TO TUNNEL WATERPROOFING SYSTEM
11. CARE SHOULD BE TAKEN BY THE NSC-009 CONTRACTOR WHEN INSTALLING TUNNEL WALKWAY AND SERVICES TO AVOID CONTROL AND GROUTING PIPES CAST INTO THE TUNNEL INTERNAL LINING
12. WALKWAY AND LADDERS TO BE INCLUDED IN CONTRACT NSC-009.

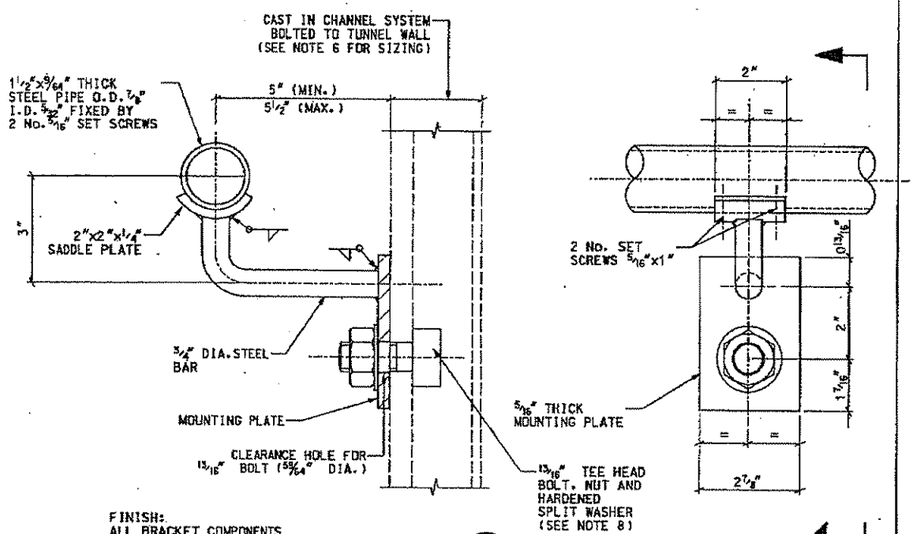

FINISH: ALL BRACKET COMPONENTS TO BE HOT DIP GALVANISED

SECTION (A)

HANDRAIL SUPPORT BRACKET

SCALE 6" = 1-0'

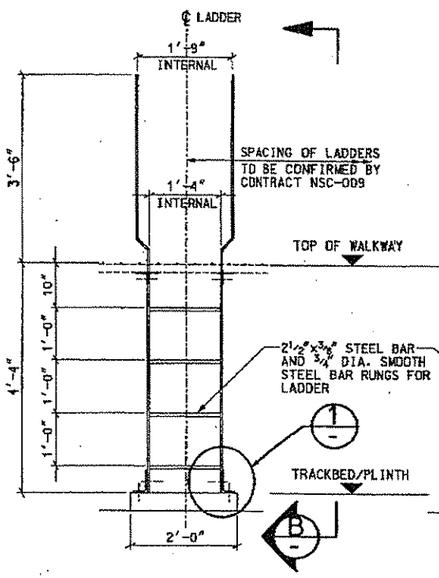

ELEVATION ON LADDER

SCALE 3/4" = 1-0'

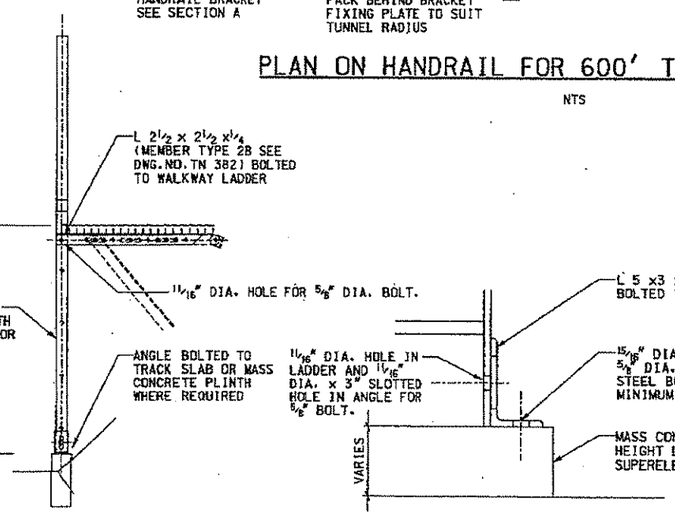

SECTION (B)

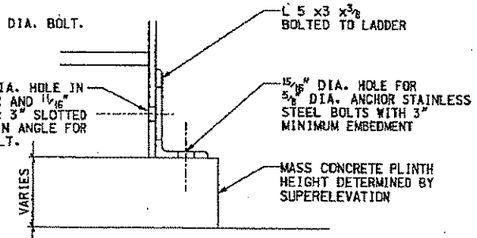

DETAIL (1)

SCALE 3" = 1-0'

FOR INFORMATION ONLY

FABER MAUNSELL | AECOM

NO.	DATE	DESCRIPTION

REVISIONS

THE PREPARATION OF THIS DOCUMENT HAS BEEN FINANCED IN PART THROUGH A GRANT FROM THE FEDERAL TRANSIT ADMINISTRATION, U.S. DEPARTMENT OF TRANSPORTATION, UNDER THE URBAN MASS TRANSPORTATION ACT OF 1964, AS AMENDED, FOR THE PORT AUTHORITY OF ALLEGHENY COUNTY, PENNSYLVANIA.

COMMONWEALTH OF PENNSYLVANIA REGISTERED PROFESSIONAL PETER DENNIS MAURITZ PE037116

SIGNATURE

DMJM HARRIS | AECOM

FOUR GATEWAY CENTER
20TH FLOOR
PITTSBURGH, PA. 15222

APPROVED 11-2-05 DATE

DESIGNED	SJW
DRAWN	GKR
CHECKED	AJM
IN CHARGE	PAR
DATE	NOV. 2, 2005
SCALE	AS SHOWN

PORT AUTHORITY OF ALLEGHENY COUNTY
PITTSBURGH PENNSYLVANIA

NORTH SHORE CONNECTOR
ALLEGHENY RIVER TUNNEL LAUNCH PIT TO RECEIVING PIT
HANDRAIL AND WALKWAY
LADDER DETAILS

PORT AUTHORITY

CONTRACT NO. NSC-003

DWG. NO. TN387 SHT. 128

TABLE OF WORKPOINTS

	STATION	OFFSET
W.P. 1L	L6037+00.09	10'-3½" RIGHT
W.P. 2L	L6037+40.25	10'-3⅝" RIGHT
W.P. 1R	R6036+87.50	9'-9½" LEFT
W.P. 2R	R6037+52.88	9'-10¼" LEFT
W.P. 3R	R6037+60.63	9'-10¼" LEFT

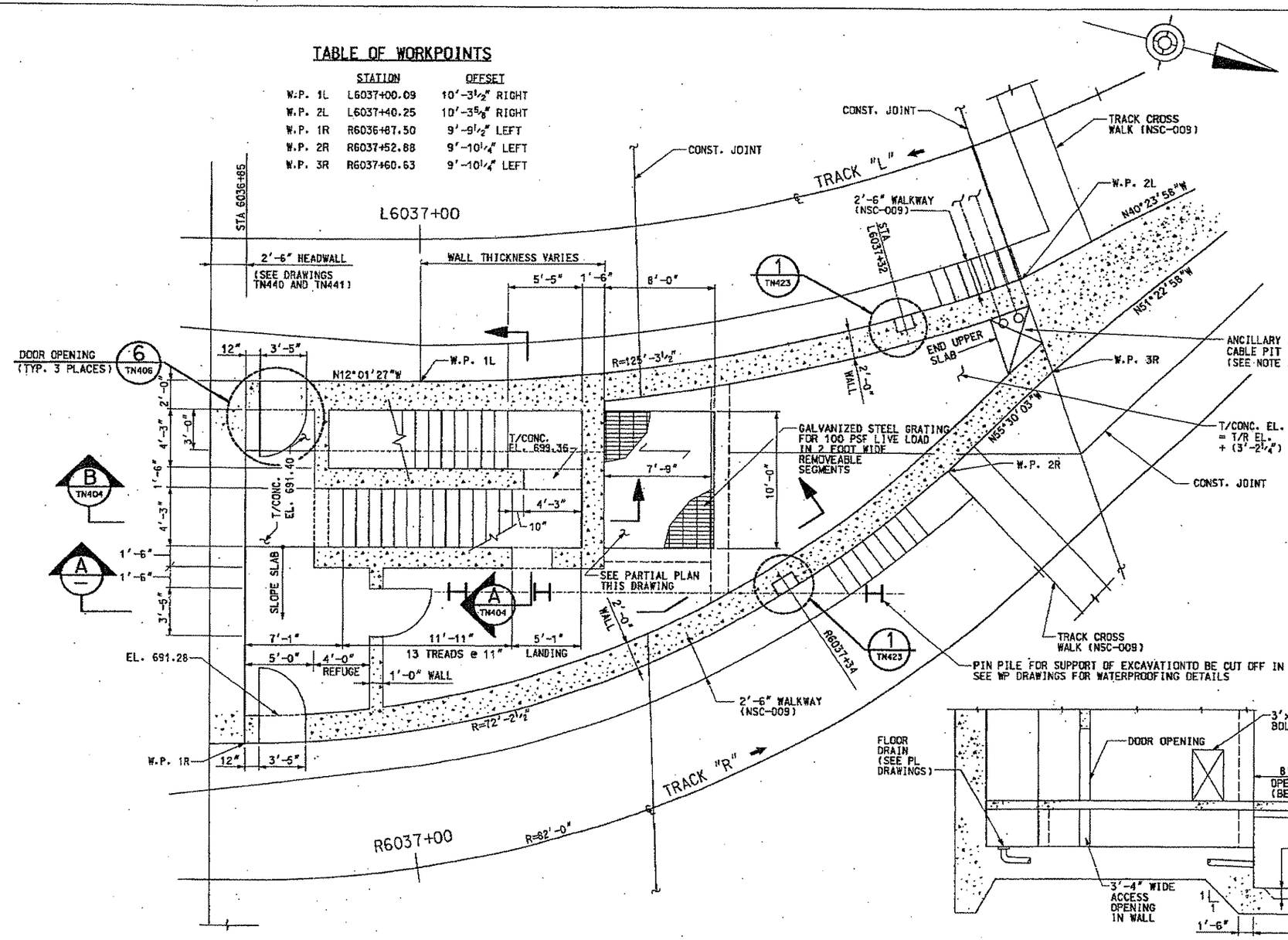

PLAN OF ANCILLARY AREA

STA L6036+85.00 TO STA L6037+40.25

SCALE: 1/4"=1'-0"

NOTES:

1. FOR GENERAL NOTES, SEE DRAWINGS TN100 & TN101.
2. SEE DRAWING TN326, PLAN AT TUNNEL AXIS LEVEL FOR ADDITIONAL DETAILS.
3. PROVIDE (2)-3" DIA. CONDUITS FROM LEFT TRACK CABLE TROUGH. PROVIDE FOR (2)-3" DIA. CONDUITS FROM CABLE PIT TO EGRESS STAIRS TO EMERGENCY EGRESS. ALLOW FOR 200 LINEAR FEET OF CONDUIT TO BE INSTALLED IN THE AREA. METHOD OF CONDUIT INSTALLATION TO BE DETERMINED. SEE NSC-009 PLANS FOR DETAILS PRIOR TO CASTING CONCRETE.
4. COORDINATE LOCATION OF LOW POINT DISCHARGE PIPE FROM BORED TUNNEL AND SUMP DISCHARGE PIPE WITH NSC-009 CONTRACT DOCUMENTS PRIOR TO CASTING CONCRETE.

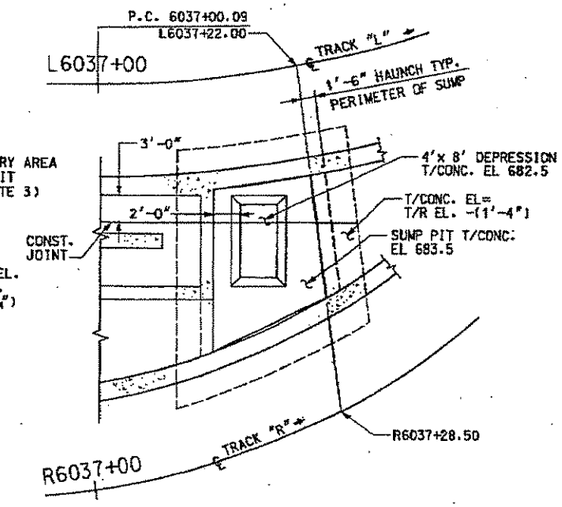

PARTIAL PLAN AT EL 683.50

SCALE: 1/8"=1'-0"

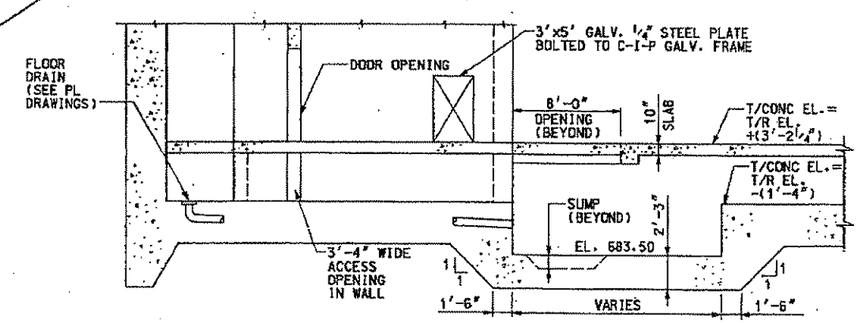

SECTION A

SCALE: 3/16"=1'-0"

NO.	DATE	DESCRIPTION

REVISIONS

THE PREPARATION OF THIS DOCUMENT HAS BEEN FINANCED IN PART THROUGH A GRANT FROM THE FEDERAL TRANSIT ADMINISTRATION, U.S. DEPARTMENT OF TRANSPORTATION, UNDER THE URBAN MASS TRANSPORTATION ACT OF 1964, AS AMENDED, FOR THE PORT AUTHORITY OF ALLEGHENY COUNTY, PENNSYLVANIA.

COMMONWEALTH OF PENNSYLVANIA REGISTERED PROFESSIONAL ENGINEER PETER DENNIS MAURITZ SIGNATURE

DMJM HARRIS | AECOM
FOUR GATEWAY CENTER
20TH FLOOR
PITTSBURGH, PA. 15222

APPROVED 11-2-05 DATE

DESIGNED	RMG
DRAWN	DWC
CHECKED	PDM
IN CHARGE	PAR
DATE	NOV. 2, 2005
SCALE	AS SHOWN

PORT AUTHORITY OF ALLEGHENY COUNTY
PITTSBURGH PENNSYLVANIA

NORTH SHORE CONNECTOR
ALLEGHENY RIVER TUNNEL LAUNCH PIT TO RECEIVING PIT
PLAN OF ANCILLARY AREA
STA L6036+85.00 TO STA L6037+40.25

PORT AUTHORITY

CONTRACT NO. NSC-003
DWG. NO. TN400 SHT. 137

10/25/2005 9:33
n:\nsf\rfing\gw\tunnel\031tn400.dgn

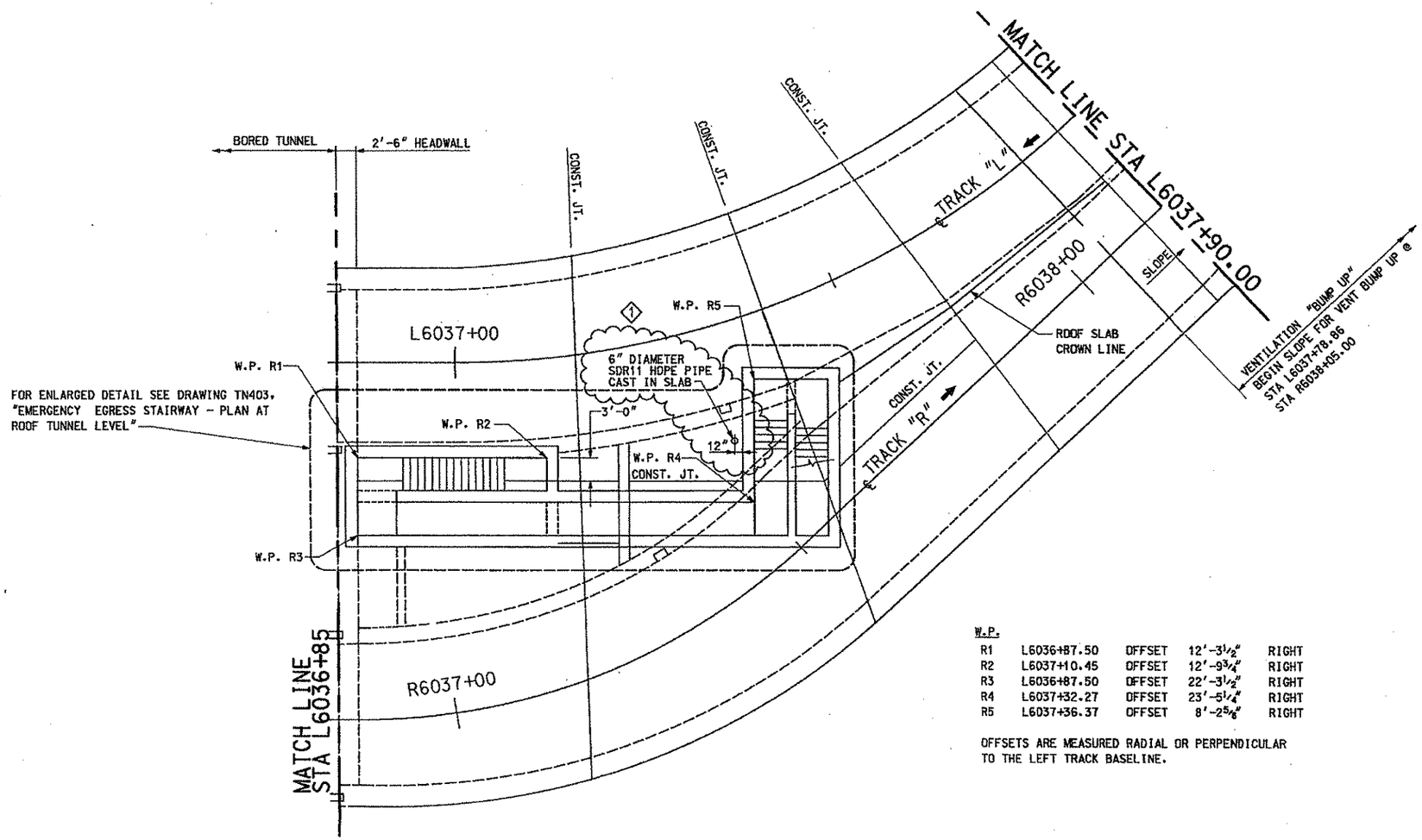

NOTES:

1. FOR GENERAL NOTES, SEE DRAWINGS TN100 & TN101.
2. FOR TRACK GEOMETRY SEE DRAWING GN028.

W.P.

R1	L6036+87.50	OFFSET	12'-3½"	RIGHT
R2	L6037+10.45	OFFSET	12'-9¾"	RIGHT
R3	L6036+87.50	OFFSET	22'-3½"	RIGHT
R4	L6037+32.27	OFFSET	23'-5¼"	RIGHT
R5	L6037+36.37	OFFSET	8'-2⅝"	RIGHT

OFFSETS ARE MEASURED RADIAL OR PERPENDICULAR TO THE LEFT TRACK BASELINE.

TUNNEL ROOF PLAN

STA L6036+85 TO STA L6037+90

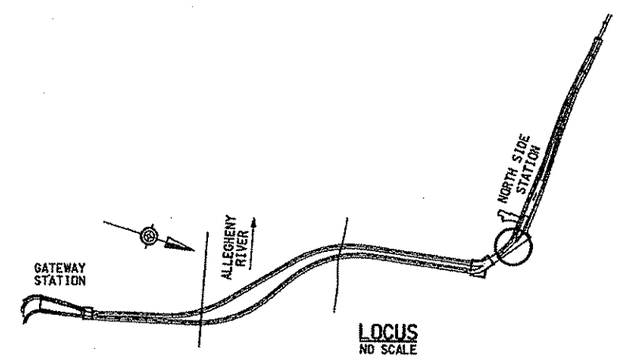

LOCUS
NO SCALE

NO.	DATE	DESCRIPTION
1	12/09/05	ADDENDUM 2 - DRAWING MODIFIED

REVISIONS

THE PREPARATION OF THIS DOCUMENT HAS BEEN FINANCED IN PART THROUGH A GRANT FROM THE FEDERAL TRANSIT ADMINISTRATION, U.S. DEPARTMENT OF TRANSPORTATION, UNDER THE URBAN MASS TRANSPORTATION ACT OF 1964, AS AMENDED, FOR THE PORT AUTHORITY OF ALLEGHENY COUNTY, PENNSYLVANIA.

COMMONWEALTH OF PENNSYLVANIA REGISTERED PROFESSIONAL ENGINEER PETER DENNIS MAUROTZ PE071163

SIGNATURE

DMJM HARRIS | AECOM
FOUR GATEWAY CENTER
20TH FLOOR
PITTSBURGH, PA. 15222

APPROVED 11-2-05 DATE

DESIGNED	RMG
DRAWN	DWC
CHECKED	PDM
IN CHARGE	PAR
DATE	NOV. 2, 2005
SCALE	1/8"=1'-0"

8' 4' 0 8'

PORT AUTHORITY OF ALLEGHENY COUNTY
PITTSBURGH PENNSYLVANIA

NORTH SHORE CONNECTOR
ALLEGHENY RIVER TUNNEL LAUNCH PIT TO RECEIVING PIT
TUNNEL ROOF PLAN
STA L6036+85 TO STA L6037+90

PORT AUTHORITY

CONTRACT NO. NSC-003
DWG. NO. TN401 SHT. 138

12/7/2005 5:23:56 PM
n:\nsf\final\gw\tunnel\03\tn401.dgn

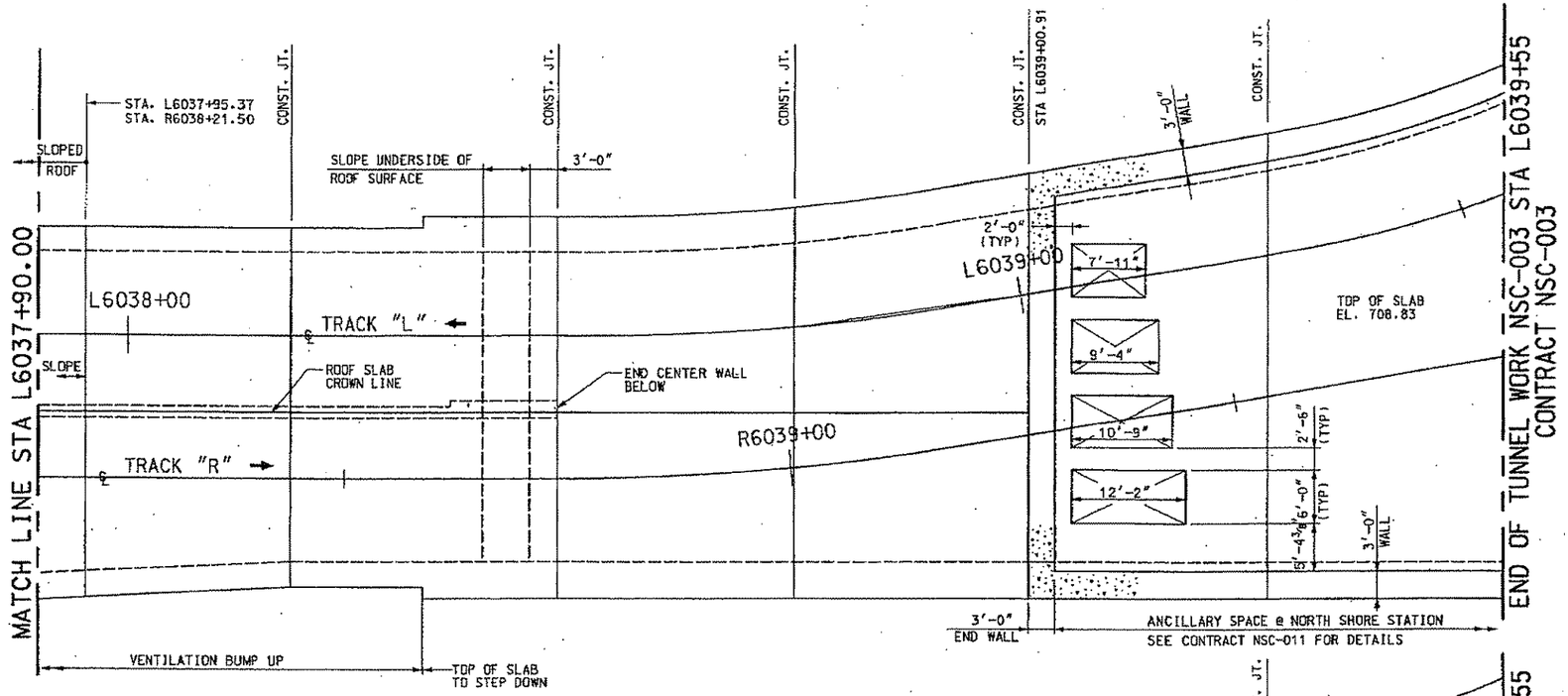

ROOF PLAN

STA L6037+90.00 TO STA L6039+55

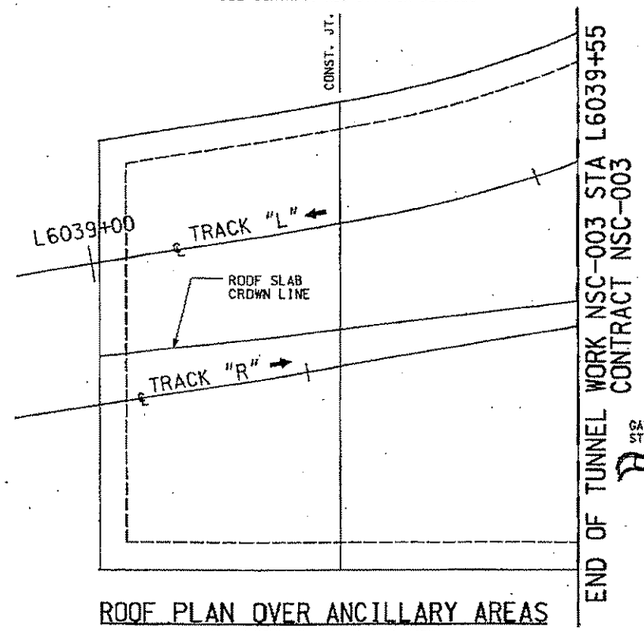

ROOF PLAN OVER ANCILLARY AREAS

STA L6038+00 TO STA L6039+55

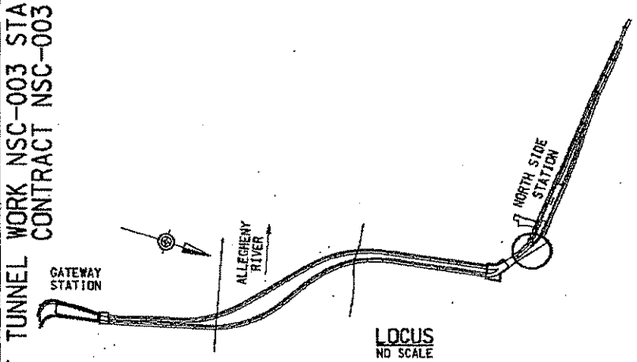

LOCUS

NO SCALE

NOTES:

1. FOR GENERAL NOTES. SEE DRAWINGS TN100 & TN101.
2. FOR TRACK GEOMETRY. SEE DRAWING GN028.
3. SEE DRAWING TN327 FOR PLAN AT TRACK LEVEL AND STATIONS OF CONSTRUCTION JOINTS.
4. FOR REINFORCEMENT AROUND OPENINGS. SEE DRAWING TN446.

NO.	DATE	DESCRIPTION

REVISIONS

THE PREPARATION OF THIS DOCUMENT HAS BEEN FINANCED IN PART THROUGH A GRANT FROM THE FEDERAL TRANSIT ADMINISTRATION, U.S. DEPARTMENT OF TRANSPORTATION, UNDER THE URBAN MASS TRANSPORTATION ACT OF 1964, AS AMENDED, FOR THE PORT AUTHORITY OF ALLEGHENY COUNTY, PENNSYLVANIA.

COMMONWEALTH OF PENNSYLVANIA REGISTERED PROFESSIONAL ENGINEER PETER DENNIS MAURITZ PE071963

SIGNATURE

DMJM HARRIS | AECOM
FOUR GATEWAY CENTER
20TH FLOOR
PITTSBURGH, PA. 15222

APPROVED — 11-2-05 DATE

DESIGNED	RWG
DRAWN	DWC
CHECKED	PDM
IN CHARGE	PAR
DATE	NOV. 2, 2005
SCALE	1/8"=1'-0"

8' 4' 0 8'

PORT AUTHORITY OF ALLEGHENY COUNTY
PITTSBURGH PENNSYLVANIA

NORTH SHORE CONNECTOR
ALLEGHENY RIVER TUNNEL LAUNCH PIT TO RECEIVING PIT
TUNNEL ROOF PLAN
STA L6037+90 TO STA L6039+55

PORT AUTHORITY

CONTRACT NO. NSC-003
DWG. NO. TN402 SHT. 139

10/25/2005 9:21:4
m:\hdf\fmdl\gw\tunnel\03tn402.dgn

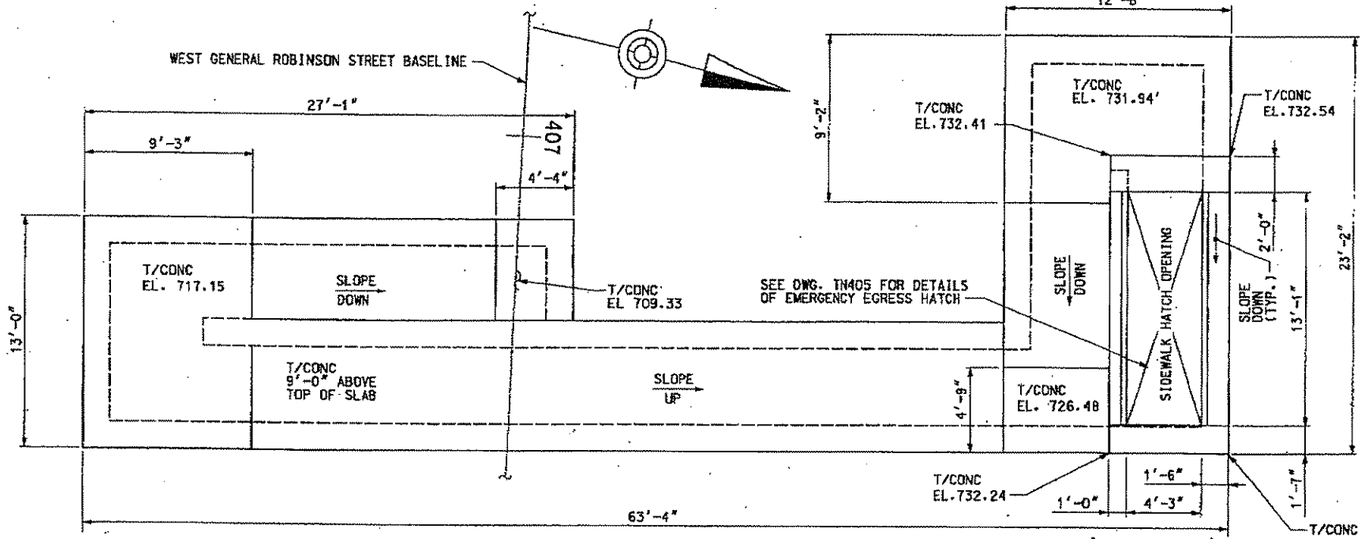

EMERGENCY EGRESS STAIRWAY – ROOF PLAN

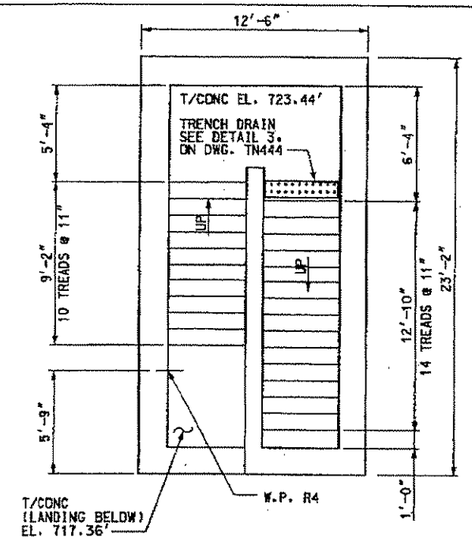

PARTIAL PLAN AT ELEVATION 723.55

NOTES:

1. FOR GENERAL NOTES, SEE DRAWINGS TN100 & TN101.
2. FOR WORKPOINT STATION AND OFFSET SEE DRAWING TN401.
3. PROVIDE (2)-3" DIA. CONDUITS FROM ANCILLARY AREA CABLE PIT TO EMERGENCY EGRESS STAIR AND HATCH. SEE NSC-009 FOR DETAILS OF CONDUIT PLACEMENT PRIOR TO CASTING CONCRETE.

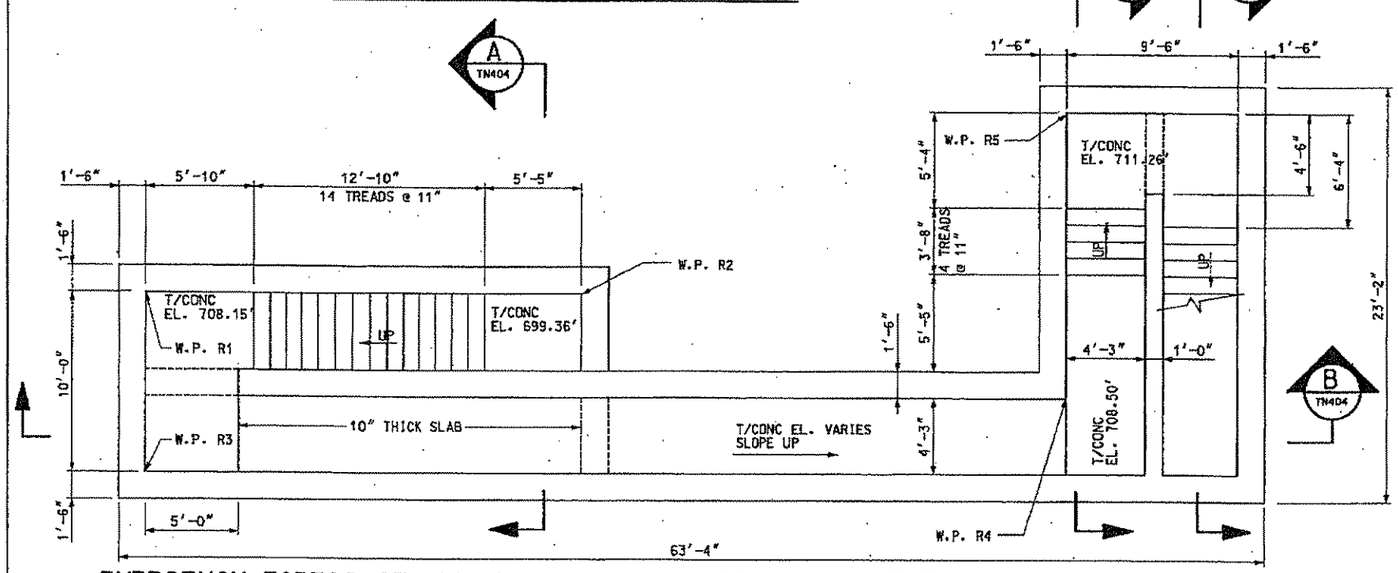

EMERGENCY EGRESS STAIRWAY – PLAN AT ROOF TUNNEL LEVEL

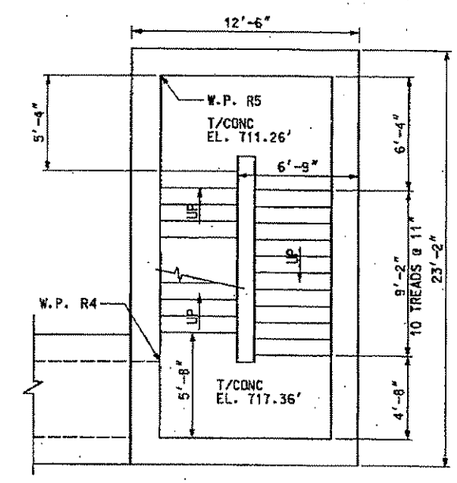

PARTIAL PLAN AT ELEVATION 711.29

NO.	DATE	DESCRIPTION

REVISIONS

THE PREPARATION OF THIS DOCUMENT HAS BEEN FINANCED IN PART THROUGH A GRANT FROM THE FEDERAL TRANSIT ADMINISTRATION, U.S. DEPARTMENT OF TRANSPORTATION, UNDER THE URBAN MASS TRANSPORTATION ACT OF 1964, AS AMENDED, FOR THE PORT AUTHORITY OF ALLEGHENY COUNTY, PENNSYLVANIA.

COMMONWEALTH OF PENNSYLVANIA REGISTERED PROFESSIONAL PETER DENNIS MAURITZ ENGINEER PE071163

SIGNATURE

DMJM HARRIS | AECOM
FOUR GATEWAY CENTER
20TH FLOOR
PITTSBURGH, PA. 15222

APPROVED 11-2-05 DATE

DESIGNED RMG
DRAWN DWC
CHECKED PDM
IN CHARGE PAR
DATE NOV. 2, 2005
SCALE 1/4"=1'-0"

PORT AUTHORITY OF ALLEGHENY COUNTY
PITTSBURGH PENNSYLVANIA

NORTH SHORE CONNECTOR
ALLEGHENY RIVER TUNNEL LAUNCH PIT TO RECEIVING PIT
EMERGENCY EGRESS STAIRWAY
ROOF PLAN

PORT AUTHORITY

CONTRACT NO. NSC-083
DWG. NO. TN403 SHT. 140

10/25/2005 9:26:
n:\rarf\final\gw\tunnel\03\tn403.dgn

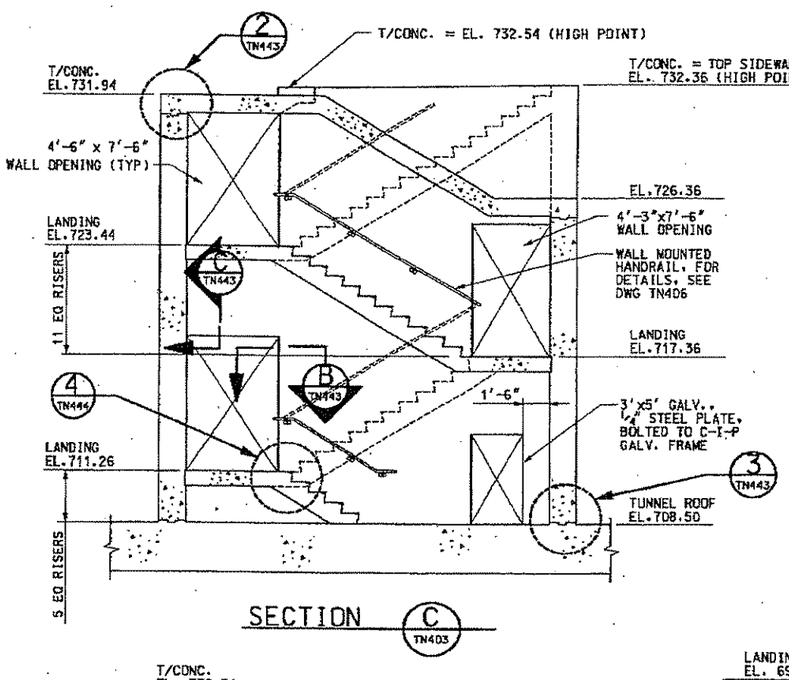

SECTION C (TN403)

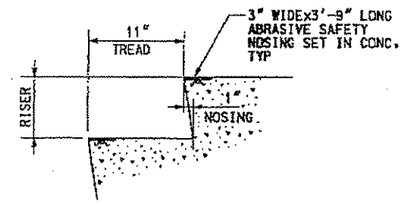

DETAIL 1 (NTS)

NOTES:

1. FOR GENERAL NOTES, SEE DRAWING TN100 & TN101.

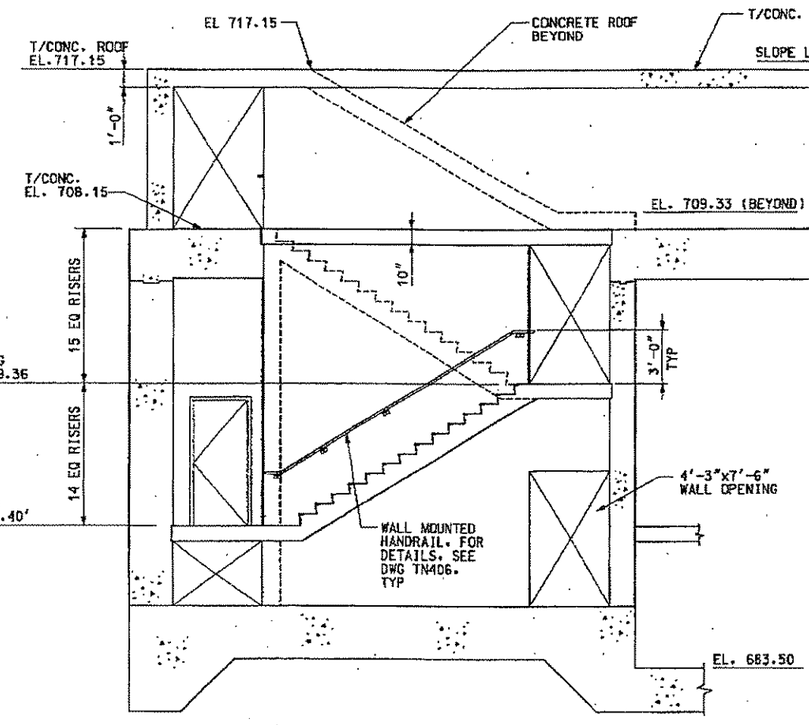

SECTION B (TN400)

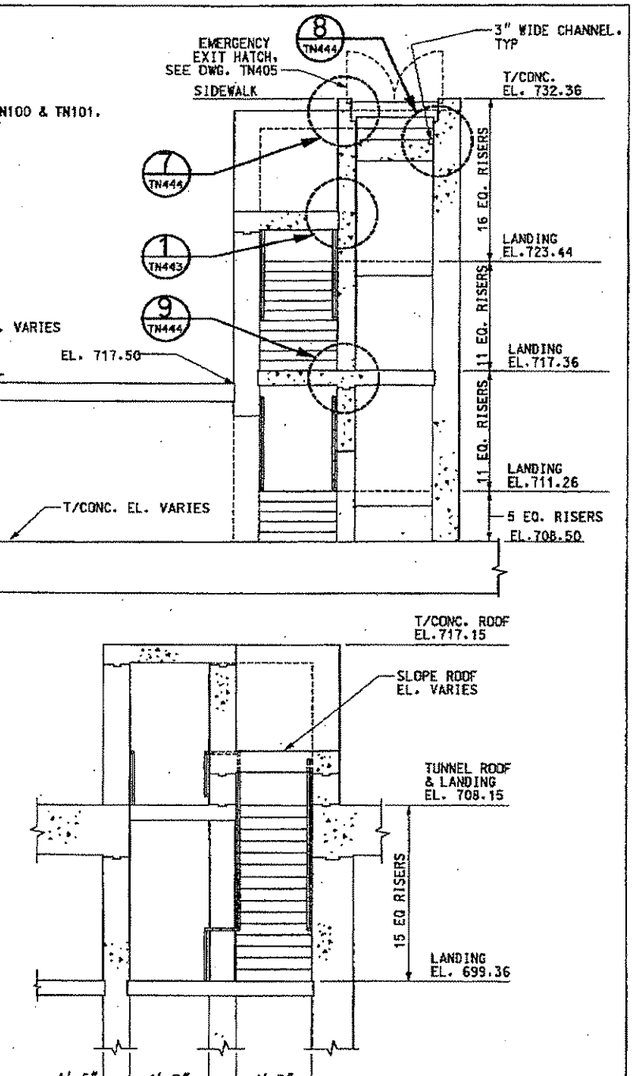

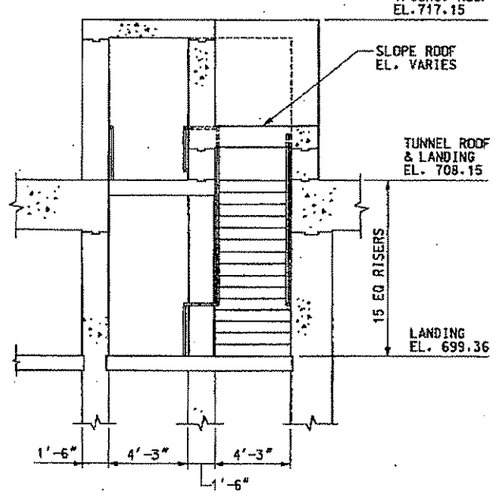

SECTION A (TN400)

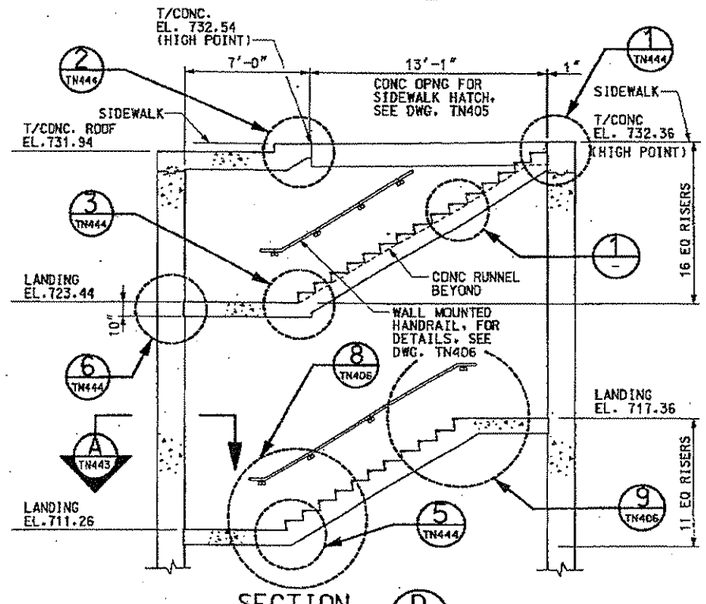

SECTION D (TN403)

NO.	DATE	DESCRIPTION

REVISIONS

THE PREPARATION OF THIS DOCUMENT HAS BEEN FINANCED IN PART THROUGH A GRANT FROM THE FEDERAL TRANSIT ADMINISTRATION, U.S. DEPARTMENT OF TRANSPORTATION, UNDER THE URBAN MASS TRANSPORTATION ACT OF 1964, AS AMENDED, FOR THE PORT AUTHORITY OF ALLEGHENY COUNTY, PENNSYLVANIA.

COMMONWEALTH OF PENNSYLVANIA REGISTERED PROFESSIONAL ENGINEER PETER DENNIS MAURITZ PE071163

SIGNATURE

DMJM HARRIS | AECOM
FOUR GATEWAY CENTER
20TH FLOOR
PITTSBURGH, PA. 15222

APPROVED 11-2-05 DATE

DESIGNED	PDM
DRAWN	DWC
CHECKED	PDM
IN CHARGE	PAR
DATE	NOV. 2, 2005
SCALE	1/4"=1'-0"

PORT AUTHORITY OF ALLEGHENY COUNTY
PITTSBURGH PENNSYLVANIA

NORTH SHORE CONNECTOR
ALLEGHENY RIVER TUNNEL LAUNCH PIT TO RECEIVING PIT
EMERGENCY EGRESS STAIRWAY
SECTIONS & DETAILS

PORT AUTHORITY

CONTRACT NO. NSC-003
DWG. NO. TN404 SHT. 141

10/25/2005 9:02h
n:\naf\find\gw\tunnel\03tn404.dgn

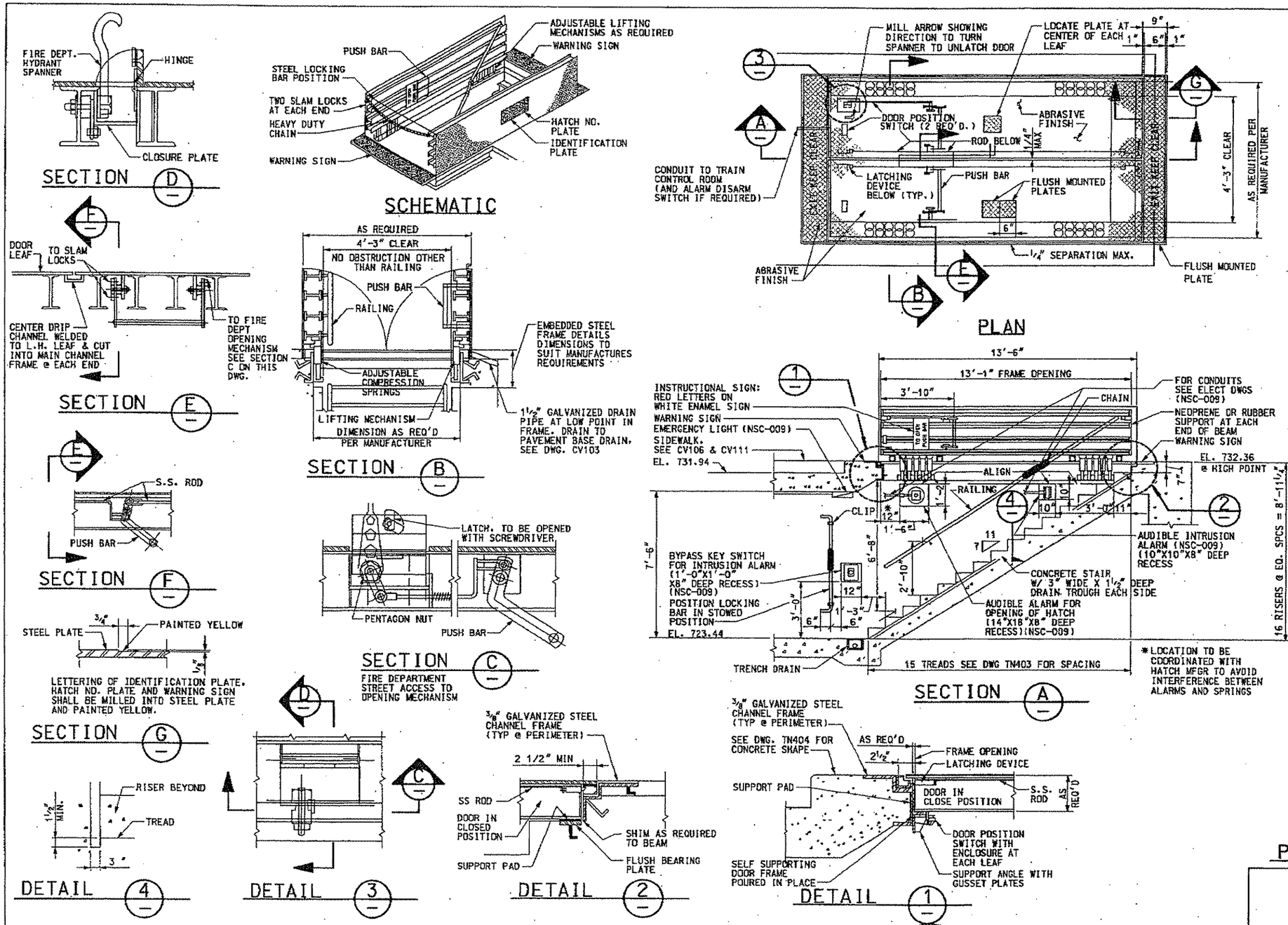

NOTES:

1. DOORS, FRAMES AND WARNING SIGNS SHALL BE INSTALLED IN ONE PLANE GENERALLY CONFORMING TO SIDEWALK CROSS SLOPES.
2. DOORS SHALL HAVE 316 STAINLESS STEEL HINGES WITH STAINLESS STEEL HINGE PINS.
3. EACH DOOR SHALL HAVE LATCHING DEVICES TO HOLD DOOR IN CLOSED POSITION. WORKING PARTS OF LATCHING DEVICES SHALL BE FABRICATED FROM BRASS, BRONZE OR STAINLESS STEEL.
4. WHEN LATCHING DEVICE IS RELEASED, DOORS SHALL BE OPENED BY MEANS OF SPRINGS AND SHALL BE HELD OPEN BY SAME. THESE SPRINGS SHALL BE ADJUSTABLE AND ADJUSTED FOR SMOOTH OPENING ACTION WITHOUT HAVING DOORS FLY OPEN SUDDENLY.
5. DOORS SHALL BE CLOSED MANUALLY.
6. LATCHING DEVICE SHALL BE RELEASED BY PUSHING BAR FROM THE EXIT PASSAGE OR BY A PENTAGON SHAPED KEY FROM OUTSIDE.
7. DOORS, FRAMES, IDENTIFICATION PLATES, HATCH NO. PLATES AND WARNING SIGNS SHALL BE HOT DIPPED GALVANIZED AFTER FABRICATION.
8. PROVIDE DOOR POSITION SWITCH WITH ENCLOSURE AT EACH LEAF.
9. PROVIDE AUDIBLE ALARM IN RECESS NEAR HATCH INTERCONNECTED TO DOOR POSITION SWITCHES. (NSC-009)
10. NUMBER AND CONFIGURATION OF LIFTING DEVICES AND HINGES TO BE DETERMINED BY MANUFACTURER.
11. THE LATCHING DEVICE SHALL BE SPRING ASSISTED FOR AUTOMATIC CLOSURE.
12. ENTRANCE FROM THE SURFACE SIDE SHALL BE PROVIDED BY FIRE DEPARTMENT HYDRANT SPANNER.
13. LATCHING/OPENING DEVICES SHALL COMPLY WITH NFPA 130, 3-2.4.5.
14. DOOR LEAF, IDENTIFICATION PLATES, HATCH NO. PLATES AND WARNING SIGNS SHALL BE SKID RESISTANT TYPE ALUMINUM PLATES. TOP SURFACE OF THE PLATES SHALL HAVE A STATIC COEFFICIENT OF FRICTION OF 0.5 FOR BOTH WET AND DRY CONDITIONS AND SHALL CONFORM TO REQUIREMENTS OF STANDARD PLAN S-601-2 OF UBC.
15. CONTRACTOR IS RESTRICTED TO A MINIMUM USE OF EXIT HATCHES DURING CONSTRUCTION BUT THE CONTRACTOR WILL BE RESPONSIBLE TO REPAIR ALL DAMAGED PRIOR TO FINAL ACCEPTANCE AND VERIFY THAT THE HATCHES ARE OPERATIONAL AND THAT THE FORCE REQUIRED TO OPEN OR CLOSE THE HATCHES IS WITHIN SPECIFIED LIMITS.
16. THE HATCH IS TO BE CLOSED WHEN BEING HANDLED. DO NOT RACK OR TWIST FRAME WHEN SETTING. SHIM AS REQUIRED TO ASSURE THAT HATCH RESTS ON THE FRAME.
17. FOR GENERAL NOTES, SEE DRAWINGS TN100 AND TN101.

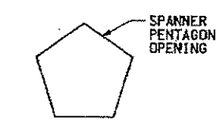

PENTAGON OPENING DETAIL

NO.	DATE	DESCRIPTION

REVISIONS

THE PREPARATION OF THIS DOCUMENT HAS BEEN FINANCED IN PART THROUGH A GRANT FROM THE FEDERAL TRANSIT ADMINISTRATION, U.S. DEPARTMENT OF TRANSPORTATION, UNDER THE URBAN MASS TRANSPORTATION ACT OF 1964, AS AMENDED, FOR THE PORT AUTHORITY OF ALLEGHENY COUNTY, PENNSYLVANIA.

COMMONWEALTH OF PENNSYLVANIA REGISTERED PROFESSIONAL ENGINEER PEZER DENNIS MAURITZ PE071163

SIGNATURE

DMJM HARRIS | AECOM
FOUR GATEWAY CENTER
20TH FLOOR
PITTSBURGH, PA. 15222

APPROVED — 11-2-05 DATE

DESIGNED	RHG
DRAWN	DWC
CHECKED	PDM
IN CHARGE	PAR
DATE	NOV. 2, 2005
SCALE	NTS

PORT AUTHORITY OF ALLEGHENY COUNTY
PITTSBURGH PENNSYLVANIA

NORTH SHORE CONNECTOR
ALLEGHENY RIVER TUNNEL LAUNCH PIT TO RECEIVING PIT
EMERGENCY EGRESS STAIRWAY
HATCH DETAIL

PORT AUTHORITY

CONTRACT NO. NSC-003
DWG. NO. TN405 SHT. 142

10/25/2005 9:26:16
m:\nsf\find\gx\tunnel\03tn105.dgn

NOTES:

1. ALL STATIONS GIVEN ARE ALONG LEFT TRACK UNLESS OTHERWISE NOTED.
2. DIMENSIONS A & D ARE MEASURED ALONG THE CONSTRUCTION JOINT OR A CONSTRUCTION LINE WHICH IS RADIAL OR PERPENDICULAR TO THE LEFT TRACK CENTERLINE AT THE STATION INDICATED. DIMENSIONS B, C, E & F ARE RADIAL OR PERPENDICULAR TO THE RESPECTIVE TRACK CENTERLINE. ELEVATIONS A, B, C & D ARE GIVEN ALONG THE CONSTRUCTION JOINT OR CONSTRUCTION LINE.
3. SEE DRAWINGS TN100 AND TN101 FOR GENERAL NOTES.
4. SEE DRAWING TN420 FOR DETAILS OF BASE SLAB PROFILE.
5. SEE DRAWING TN421 FOR CONSTRUCTION JOINT AND WATERSTOP DETAIL.
6. SEE WP DRAWINGS FOR DETAILS OF WATERPROOFING SYSTEM.
7. SEE DRAWINGS TN790 THROUGH TN802 FOR DETAILS OF LAUNCH PIT SUPPORT OF EXCAVATION.
8. ELEVATION E,F, H, AND I PERTAIN TO THE 5 FOOT CORRIDOR ONLY ELSEWHERE SLOPE IS FROM EL B TO EL C.
9. SEE DRAWINGS TN400, 401 & 404 FOR DETAILS OF ANCILLIARY SPACE AND EMERGENCY EGRESS STAIRWAY.

WEST GENERAL ROBINSON STREET

TABLE OF DIMENSIONS
(SEE NOTE 2)

STA.	LINE	A	B	C	D	E	F	EL. A	EL. B	EL. C	EL. D	EL. E	EL. F	EL. G	EL. H	EL. I
L6036+87.50	HEADWALL	69'-5¾"	9'-4¾"	10'-3⅝"	22'-1"	9'-9⅝"	8'-5"	686.86	686.86	686.74	686.74	687.11	686.81	691.40	691.28	685.50
L6037+11.85	CONST. LINE	67'-2½"	9'-9½"	10'-3⅝"	17'-6"	9'-9⅝"	9'-7¾"	686.99	686.99	686.91	686.91					

C.J. DENOTES CONSTRUCTION JOINT

CONST. LINE DENOTES CONSTRUCTION LINE WHICH IS RADIAL OR PERPENDICULAR TO THE LEFT TRACK CENTERLINE AT THE STATION INDICATED

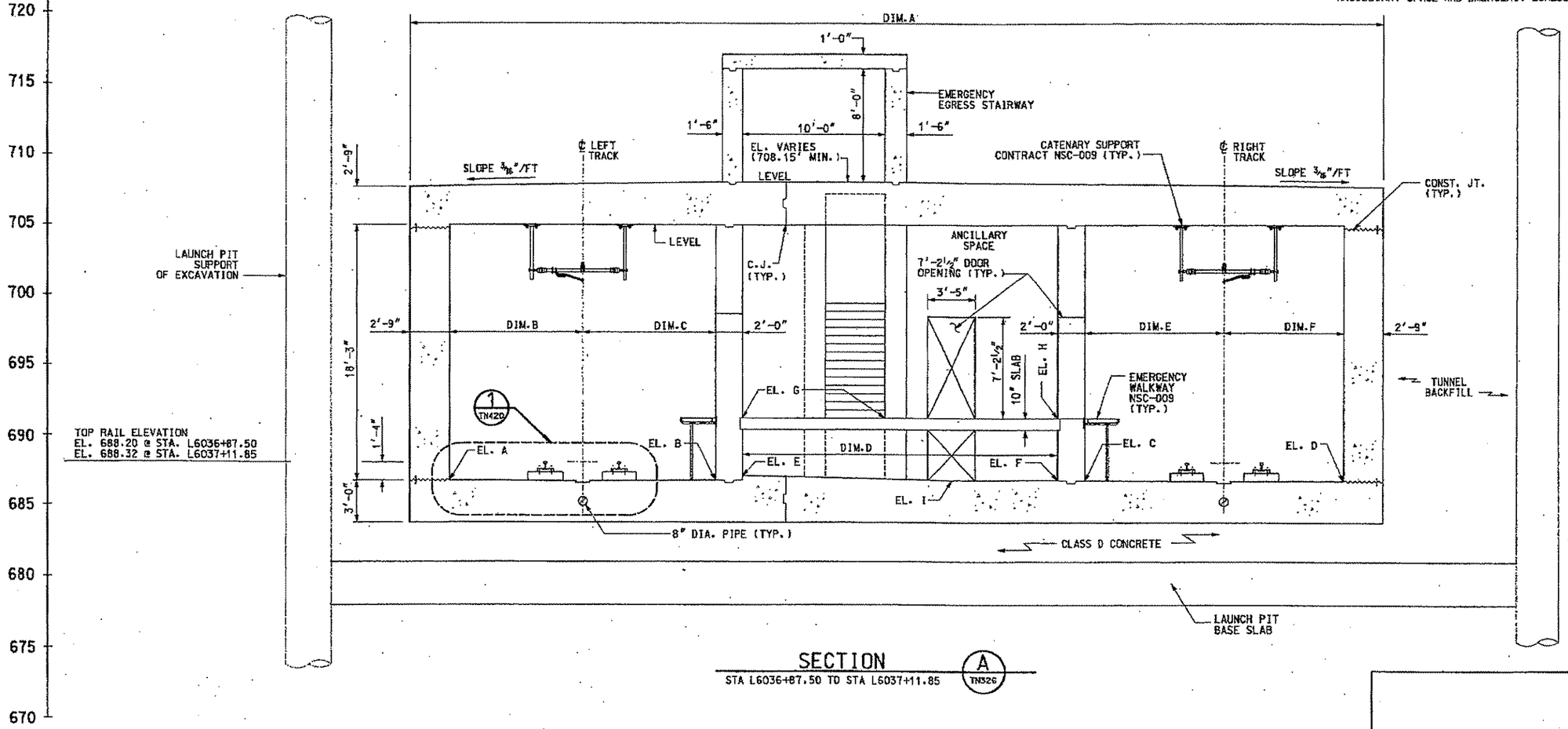

SECTION A (TN326)

STA L6036+87.50 TO STA L6037+11.85

NO.	DATE	DESCRIPTION

REVISIONS

THE PREPARATION OF THIS DOCUMENT HAS BEEN FINANCED IN PART THROUGH A GRANT FROM THE FEDERAL TRANSIT ADMINISTRATION, U.S. DEPARTMENT OF TRANSPORTATION, UNDER THE URBAN MASS TRANSPORTATION ACT OF 1964, AS AMENDED, FOR THE PORT AUTHORITY OF ALLEGHENY COUNTY, PENNSYLVANIA.

COMMONWEALTH OF PENNSYLVANIA REGISTERED PROFESSIONAL ENGINEER PETER DENNIS MAURITZ PE071163

SIGNATURE

DMJM HARRIS | AECOM
FOUR GATEWAY CENTER
20TH FLOOR
PITTSBURGH, PA. 15222

APPROVED 11-2-05 DATE

DESIGNED RMG
DRAWN NPD
CHECKED PDM
IN CHARGE PAR
DATE NOV. 2, 2005
SCALE 1/4"=1'-0"
4' 2' 0 4'

PORT AUTHORITY OF ALLEGHENY COUNTY
PITTSBURGH PENNSYLVANIA

NORTH SHORE CONNECTOR
ALLEGHENY RIVER TUNNEL LAUNCH PIT TO RECEIVING PIT
TUNNEL CROSS SECTION GEOMETRY
STA L6036+87.50 TO STA L6037+11.85

PORT AUTHORITY

CONTRACT NO. NSC-009
DWG. NO. TN410 SHT. 144

10/25/2005 36765
n:\nsf\find\cpr\tunnel\03th410.dgn

TABLE OF DIMENSIONS
(SEE NOTE 2)

STA.	LINE	A	B	C	D	E	F	EL. A	EL. B	EL. C	EL. D
L6037+11.85	CON LINE	67'-2½"	9'-9½"	10'-3⅜"	17'-6"	9'-9⅝"	9'-7¾"	686.99	686.99	686.91	686.88
L6037+15.36	C.J.	67'-7½"	9'-10⅝"	10'-3⅜"	17'-1¼"	9'-9⅝"	9'-8⅛"	687.01	687.00	686.92	686.88
L6037+40.25	C.J.	56'-0⅝"	10'-2⅞"	10'-3⅜"	2'-10"	9'-10¼"	10'-10⅞"	687.13	687.13	687.11	687.07

C.J. DENOTES CONSTRUCTION JOINT

CONST. LINE DENOTES CONSTRUCTION LINE WHICH IS RADIAL OR PERPENDICULAR TO THE LEFT TRACK CENTERLINE AT THE STATION INDICATED

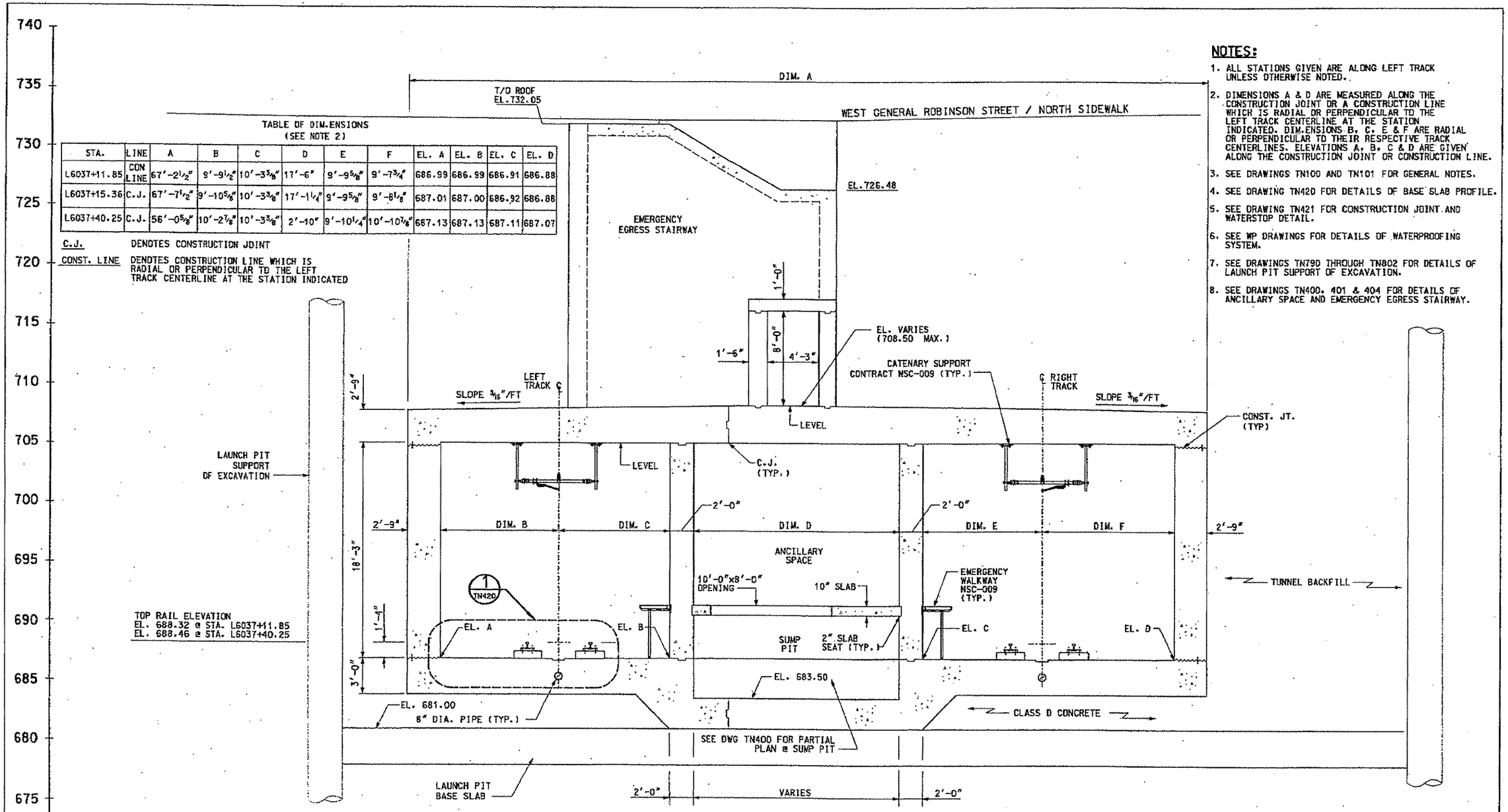

SECTION A

STA. L6037+11.85 TO STA. L6037+40.25 (TN326)

NOTES:

1. ALL STATIONS GIVEN ARE ALONG LEFT TRACK UNLESS OTHERWISE NOTED.
2. DIMENSIONS A & D ARE MEASURED ALONG THE CONSTRUCTION JOINT OR A CONSTRUCTION LINE WHICH IS RADIAL OR PERPENDICULAR TO THE LEFT TRACK CENTERLINE AT THE STATION INDICATED. DIMENSIONS B, C, E & F ARE RADIAL OR PERPENDICULAR TO THEIR RESPECTIVE TRACK CENTERLINES. ELEVATIONS A, B, C & D ARE GIVEN ALONG THE CONSTRUCTION JOINT OR CONSTRUCTION LINE.
3. SEE DRAWINGS TN100 AND TN101 FOR GENERAL NOTES.
4. SEE DRAWING TN420 FOR DETAILS OF BASE SLAB PROFILE.
5. SEE DRAWING TN421 FOR CONSTRUCTION JOINT AND WATERSTOP DETAIL.
6. SEE WP DRAWINGS FOR DETAILS OF WATERPROOFING SYSTEM.
7. SEE DRAWINGS TN790 THROUGH TN802 FOR DETAILS OF LAUNCH PIT SUPPORT OF EXCAVATION.
8. SEE DRAWINGS TN400, 401 & 404 FOR DETAILS OF ANCILLARY SPACE AND EMERGENCY EGRESS STAIRWAY.

NO.	DATE	DESCRIPTION

REVISIONS

THE PREPARATION OF THIS DOCUMENT HAS BEEN FINANCED IN PART THROUGH A GRANT FROM THE FEDERAL TRANSIT ADMINISTRATION, U.S. DEPARTMENT OF TRANSPORTATION, UNDER THE URBAN MASS TRANSPORTATION ACT OF 1964, AS AMENDED, FOR THE PORT AUTHORITY OF ALLEGHENY COUNTY, PENNSYLVANIA.

COMMONWEALTH OF PENNSYLVANIA REGISTERED PROFESSIONAL PETER DENNIS MAURITZ ENGINEER PE071183

SIGNATURE

DMJM HARRIS | AECOM
FOUR GATEWAY CENTER
20TH FLOOR
PITTSBURGH, PA. 15222

APPROVED 11-2-05 DATE

DESIGNED	RMG
DRAWN	NPD
CHECKED	PDM
IN CHARGE	PAR
DATE	NOV. 2, 2005
SCALE	1/4"=1'-0"

PORT AUTHORITY OF ALLEGHENY COUNTY
PITTSBURGH PENNSYLVANIA

NORTH SHORE CONNECTOR
ALLEGHENY RIVER TUNNEL LAUNCH PIT TO RECEIVING PIT
TUNNEL CROSS SECTION GEOMETRY
STA. L6037+11.85 TO STA. L6037+40.25

PORT AUTHORITY

CONTRACT NO. NSC-003
DWG. NO. TN411 SHT. 145

10/25/2005 9:26h
n:\rsrf\finalvgn\tunnel\03tn411.dgn

TABLE OF DIMENSIONS (SEE NOTE 2)

STA.	LINE	A	B	C	D	E	F	EL. A	EL. B	EL. C	EL. D
L6037+40.25	C.J.	56'-0 5/8"	10'-2 7/8"	10'-3 5/8"	7'-0 3/8"	9'-10 1/4"	10'-10 7/8"	687.13	687.13	687.11	687.07
L6037+60.23	C.J.	46'-2 3/4"	10'-1 1/2"	9'-0"	2'-2 1/8"	8'-2 3/8"	10'-10 7/8"	687.22	687.23	687.24	687.23
L6037+85.00	C.J.	42'-1 3/8"	9'-5 3/4"	8'-0 1/8"	1'-4"	6'-9 7/8"	10'-10 7/8"	687.35	687.35	687.37	687.37
L6038+17.83	C.J.	40'-3 1/8"	9'-4 3/4"	8'-0 1/8"	1'-4"	6'-9 7/8"	9'-4 1/8"	687.53	687.53	687.53	687.53
L6038+32.83	CON LINE	40'-5"	9'-4 3/4"	8'-0 1/8"	1'-4"	6'-9 7/8"	9'-4 1/8"	687.60	687.60	687.60	687.60
L6038+35.83	CON LINE	42'-11"	9'-4 3/4"	7'-4 1/8"	2'-0"	6'-9 7/8"	9'-4 1/8"	687.62	687.62	687.62	687.62
L6038+47.83	C.J.	42'-11"	9'-4 3/4"	7'-4 1/8"	2'-0"	6'-9 7/8"	9'-4 1/8"	687.68	687.68	687.68	687.68

C.J. DENOTES CONSTRUCTION JOINT

CONST. LINE DENOTES CONSTRUCTION LINE WHICH IS RADIAL OR PERPENDICULAR TO THE LEFT TRACK CENTERLINE AT THE STATION INDICATED

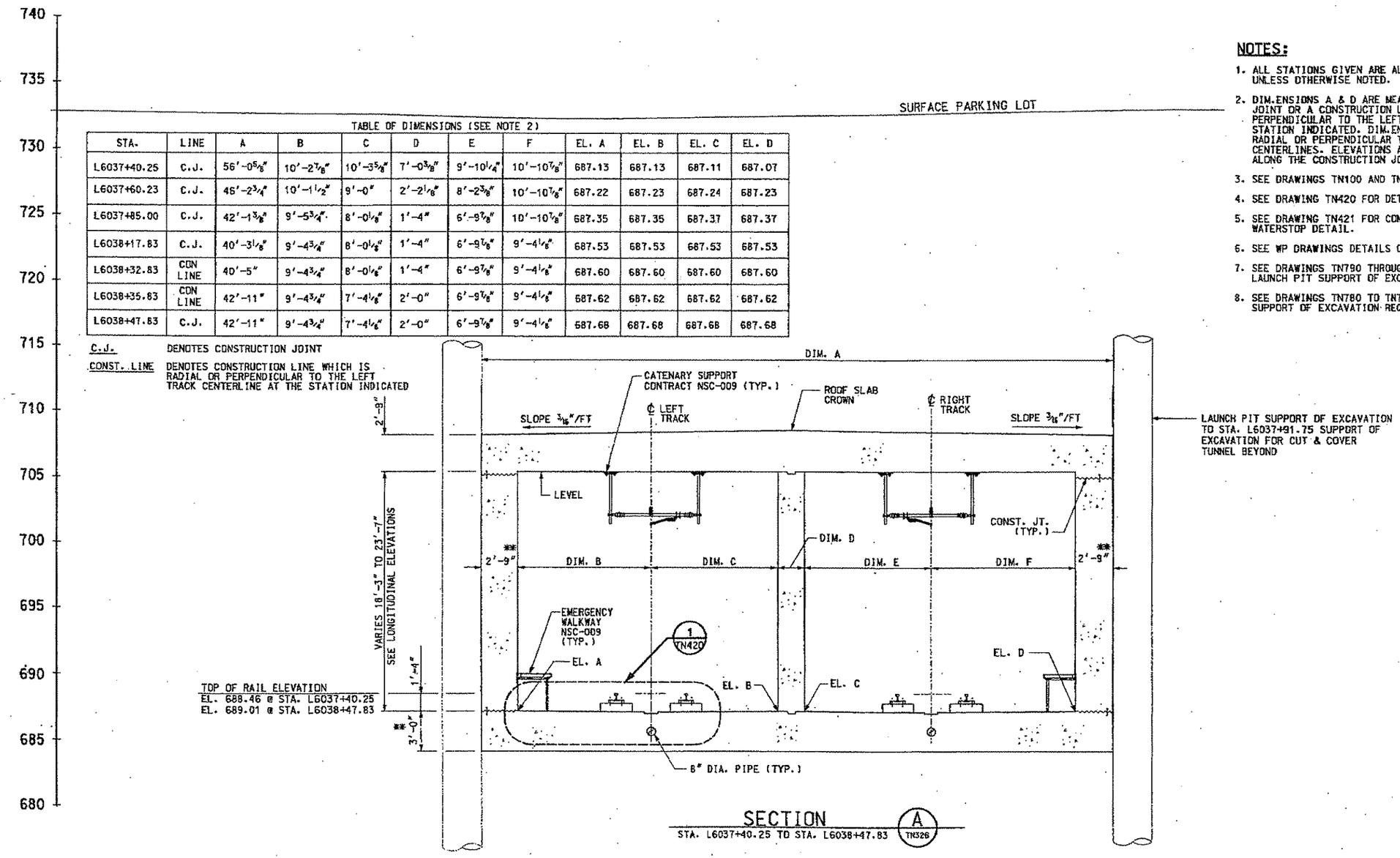

SECTION A TN326

STA. L6037+40.25 TO STA. L6038+47.83

NOTES:

1. ALL STATIONS GIVEN ARE ALONG LEFT TRACK UNLESS OTHERWISE NOTED.
2. DIMENSIONS A & D ARE MEASURED ALONG THE CONSTRUCTION JOINT OR A CONSTRUCTION LINE WHICH IS RADIAL OR PERPENDICULAR TO THE LEFT TRACK CENTERLINE AT THE STATION INDICATED. DIMENSIONS B, C, E & F ARE RADIAL OR PERPENDICULAR TO THEIR RESPECTIVE TRACK CENTERLINES. ELEVATIONS A, B, C & D ARE GIVEN ALONG THE CONSTRUCTION JOINT OR CONSTRUCTION LINE.
3. SEE DRAWINGS TN100 AND TN101 FOR GENERAL NOTES.
4. SEE DRAWING TN420 FOR DETAILS OF BASE SLAB PROFILE.
5. SEE DRAWING TN421 FOR CONSTRUCTION JOINT AND WATERSTOP DETAIL.
6. SEE WP DRAWINGS DETAILS OF WATERPROOFING SYSTEM.
7. SEE DRAWINGS TN790 THROUGH TN802 FOR DETAILS OF LAUNCH PIT SUPPORT OF EXCAVATION.
8. SEE DRAWINGS TN780 TO TN783 FOR CONTRACTOR DESIGN SUPPORT OF EXCAVATION REQUIREMENTS.

** BEYOND STATION L6038+32.83, WALLS THICKEN TO 4'-0" AND BASE SLAB DEPTH INCREASES TO 4'-0"

NO.	DATE	DESCRIPTION

REVISIONS

THE PREPARATION OF THIS DOCUMENT HAS BEEN FINANCED IN PART THROUGH A GRANT FROM THE FEDERAL TRANSIT ADMINISTRATION, U.S. DEPARTMENT OF TRANSPORTATION, UNDER THE URBAN MASS TRANSPORTATION ACT OF 1964, AS AMENDED, FOR THE PORT AUTHORITY OF ALLEGHENY COUNTY, PENNSYLVANIA.

COMMONWEALTH OF PENNSYLVANIA REGISTERED PROFESSIONAL PETER DENNIS MAURITZ ENGINEER PE071983

SIGNATURE

DMJM HARRIS | AECOM

FOUR GATEWAY CENTER
20TH FLOOR
PITTSBURGH, PA. 15222

APPROVED 11-2-05 DATE

DESIGNED RMG
DRAWN NPD
CHECKED PDM
IN CHARGE PAR
DATE NOV. 2, 2005
SCALE 1/4"=1'-0"
4' 2' 0 4'

PORT AUTHORITY

PORT AUTHORITY OF ALLEGHENY COUNTY
PITTSBURGH PENNSYLVANIA

NORTH SHORE CONNECTOR
ALLEGHENY RIVER TUNNEL LAUNCH PIT TO RECEIVING PIT
TUNNEL CROSS SECTION GEOMETRY
STA. L6037+40.25 TO STA. L6038+47.83

CONTRACT NO. NSC-003
DWG. NO. TN412 SHT. 146

10/25/2005 9:26
n:\nsf\fing\gpr\tunnel\03tn412.dgn

TABLE OF DIMENSIONS
(SEE NOTE 2)

STA.	LINE	A	B	C	EL. A	EL. D
L6038+47.83	C.J.	42'-11"	9'-4 3/4"	9'-4 1/8"	687.68	687.68
L6038+74.25	C.J.	43'-11 1/2"	9'-4 3/4"	10'-7 5/8"	687.81	687.81
L6039+00.91	C.J.	47'-9 1/8"	9'-4 3/4"	14'-5 7/8"	687.95	687.94

C.J. DENOTES CONSTRUCTION JOINT

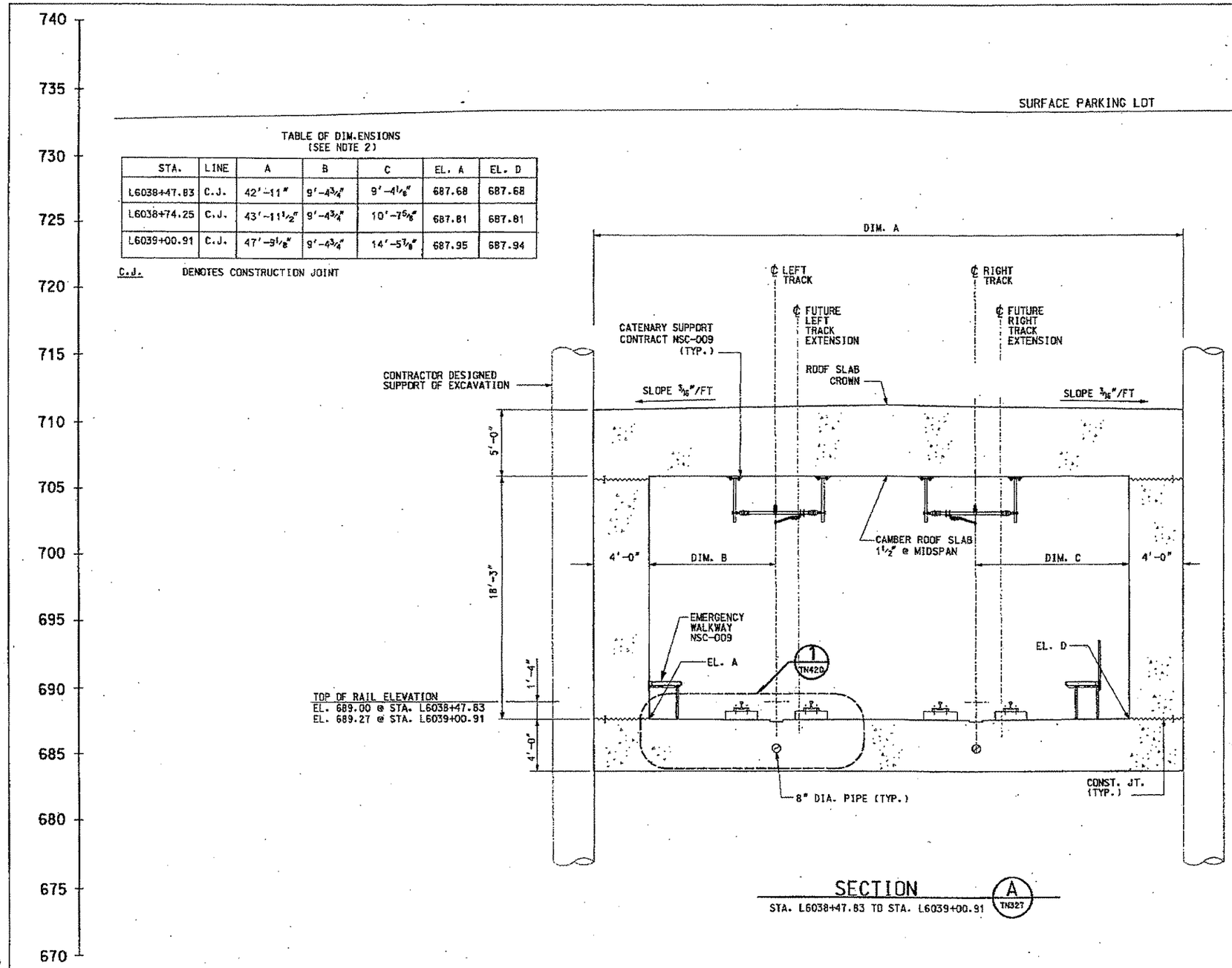

SECTION A TN327
STA. L6038+47.83 TO STA. L6039+00.91

NOTES:

1. ALL STATIONS GIVEN ARE ALONG LEFT TRACK UNLESS OTHERWISE NOTED.
2. DIMENSION A IS MEASURED ALONG THE CONSTRUCTION JOINT LINE. DIMENSIONS B & C ARE RADIAL OR PERPENDICULAR TO THEIR RESPECTIVE TRACK CENTERLINES. ELEVATIONS A & D ARE GIVEN ALONG THE CONSTRUCTION JOINT OR CONSTRUCTION LINE.
3. SEE DRAWINGS TN100 AND TN101 FOR GENERAL NOTES.
4. SEE DRAWING TN420 FOR DETAILS OF BASE SLAB PROFILE.
5. SEE DRAWING TN421 FOR CONSTRUCTION JOINT AND WATERSTOP DETAIL.
6. SEE WP DRAWINGS FOR DETAIL OF WATERPROOFING SYSTEM.
7. SEE DWGS TN780 TO TN785 FOR CONTRACTOR DESIGNED SUPPORT OF EXCAVATION REQUIREMENTS.

NO.	DATE	DESCRIPTION

REVISIONS

THE PREPARATION OF THIS DOCUMENT HAS BEEN FINANCED IN PART THROUGH A GRANT FROM THE FEDERAL TRANSIT ADMINISTRATION, U.S. DEPARTMENT OF TRANSPORTATION, UNDER THE URBAN MASS TRANSPORTATION ACT OF 1964, AS AMENDED. FOR THE PORT AUTHORITY OF ALLEGHENY COUNTY, PENNSYLVANIA.

COMMONWEALTH OF PENNSYLVANIA REGISTERED PROFESSIONAL ENGINEER PETER DENNIS MAURITZ PE071162
SIGNATURE

DMJM HARRIS | AECOM
FOUR GATEWAY CENTER
20TH FLOOR
PITTSBURGH, PA. 15222
APPROVED 11-2-05 DATE

DESIGNED KM
DRAWN NPD
CHECKED PDM
IN CHARGE PAR
DATE NOV. 2, 2005
SCALE 1/4"=1'-0"

PORT AUTHORITY OF ALLEGHENY COUNTY
PITTSBURGH PENNSYLVANIA

NORTH SHORE CONNECTOR
ALLEGHENY RIVER TUNNEL LAUNCH PIT TO RECEIVING PIT
TUNNEL CROSS SECTION GEOMETRY
STA. L6038+47.83 TO STA. L6039+00.91

PORT AUTHORITY
CONTRACT NO. NSC-009
DWG. NO. TN413 SHT. 147

10/25/2005 9:21:17
n:\hsr\tlind\gw\tunnels\03tn413.dgn

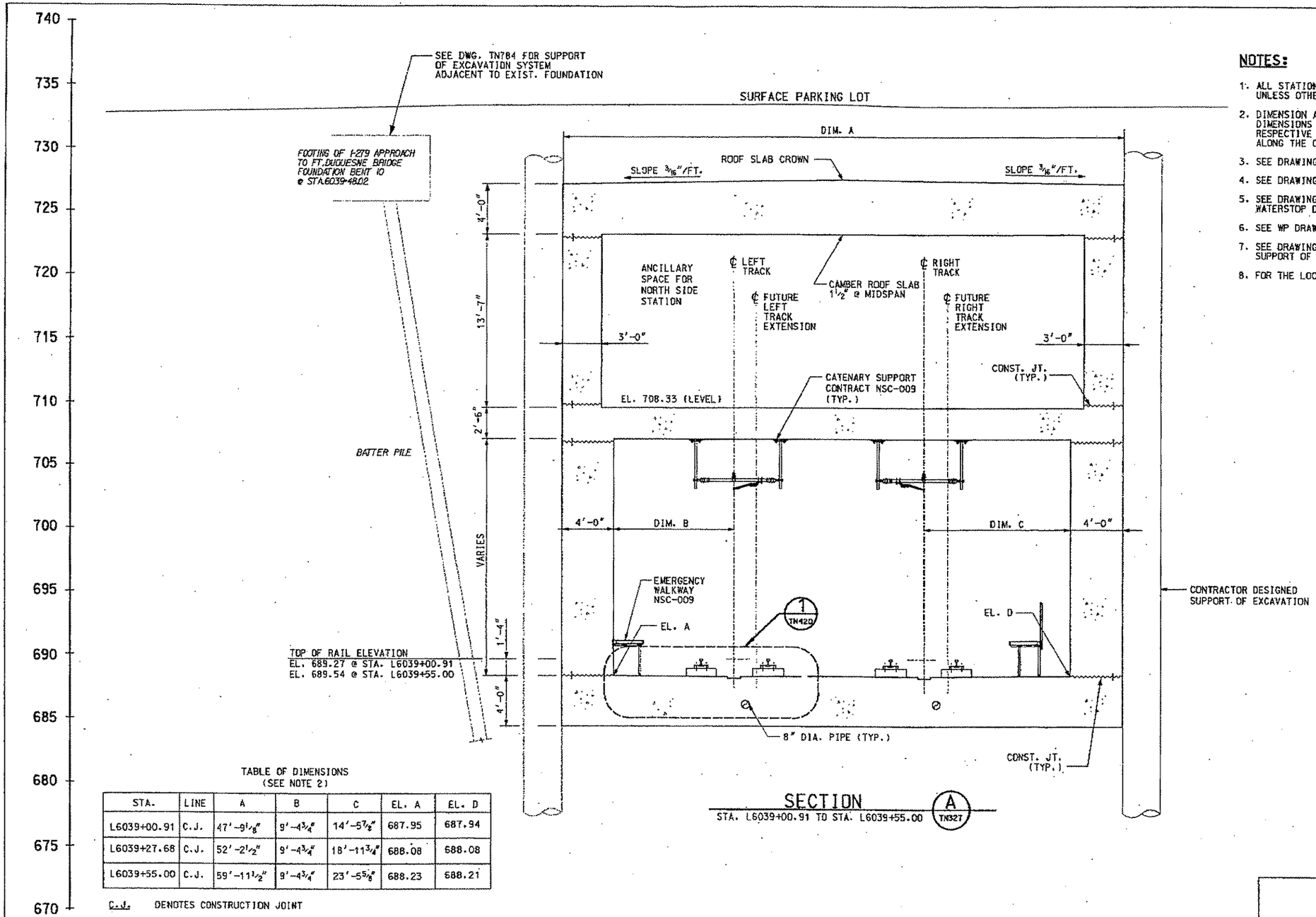

SECTION A TN327

STA. L6039+00.91 TO STA. L6039+55.00

TABLE OF DIMENSIONS
(SEE NOTE 2)

STA.	LINE	A	B	C	EL. A	EL. D
L6039+00.91	C.J.	47'-9 1/8"	9'-4 3/4"	14'-5 7/8"	687.95	687.94
L6039+27.68	C.J.	52'-2 1/2"	9'-4 3/4"	18'-11 3/4"	688.08	688.08
L6039+55.00	C.J.	59'-11 1/2"	9'-4 3/4"	23'-5 5/8"	688.23	688.21

C.J. DENOTES CONSTRUCTION JOINT

NOTES:

1. ALL STATIONS GIVEN ARE ALONG LEFT TRACK UNLESS OTHERWISE NOTED.
2. DIMENSION A IS MEASURED ALONG THE CONSTRUCTION JOINT LINE. DIMENSIONS B & C ARE RADIAL OR PERPENDICULAR TO THEIR RESPECTIVE TRACK CENTERLINES. ELEVATIONS A & D ARE GIVEN ALONG THE CONSTRUCTION JOINT LINE.
3. SEE DRAWINGS TN100 AND TN101 FOR GENERAL NOTES.
4. SEE DRAWING TN420 FOR DETAILS OF BASE SLAB PROFILE.
5. SEE DRAWING TN421 FOR CONSTRUCTION JOINT AND WATERSTOP DETAIL.
6. SEE WP DRAWINGS FOR DETAILS OF WATERPROOFING SYSTEM.
7. SEE DRAWINGS TN780 TO TN785 FOR CONTRACTOR DESIGNED SUPPORT OF EXCAVATION REQUIREMENTS.
8. FOR THE LOCATION OF FLOOR OPENINGS SEE DRAWING TN402.

NO.	DATE	DESCRIPTION

REVISIONS

THE PREPARATION OF THIS DOCUMENT HAS BEEN FINANCED IN PART THROUGH A GRANT FROM THE FEDERAL TRANSIT ADMINISTRATION, U.S. DEPARTMENT OF TRANSPORTATION, UNDER THE URBAN MASS TRANSPORTATION ACT OF 1964, AS AMENDED, FOR THE PORT AUTHORITY OF ALLEGHENY COUNTY, PENNSYLVANIA.

COMMONWEALTH OF PENNSYLVANIA REGISTERED PROFESSIONAL ENGINEER PETER DENNIS MAURITZ PE071183

SIGNATURE

DMJM HARRIS | AECOM
FOUR GATEWAY CENTER
20TH FLOOR
PITTSBURGH, PA. 15222

APPROVED 11-2-05 DATE

DESIGNED AP
DRAWN NPD
CHECKED PDM
IN CHARGE PAR
DATE NOV. 2, 2005
SCALE 1/4"=1'-0"
4' 2' 0 4'

PORT AUTHORITY OF ALLEGHENY COUNTY
PITTSBURGH PENNSYLVANIA

NORTH SHORE CONNECTOR
ALLEGHENY RIVER TUNNEL LAUNCH PIT TO RECEIVING PIT
TUNNEL CROSS SECTION GEOMETRY
STA. L6039+00.91 TO STA. L6039+55.00

PORT AUTHORITY

CONTRACT NO. NSC-003
DWG. NO. TN414 SHT. 148

10/25/2005 9:24
n:\vista\finding\n\tunnel\03tn414.dgn

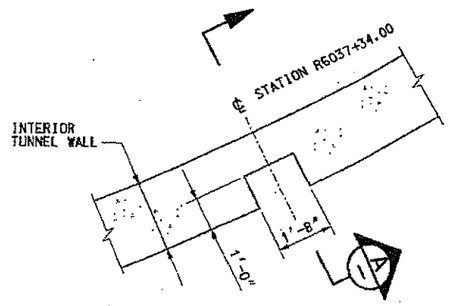

DETAIL 1 (TN400)
SCALE: 1/2"=1'-0"
2' 1' 0 2'

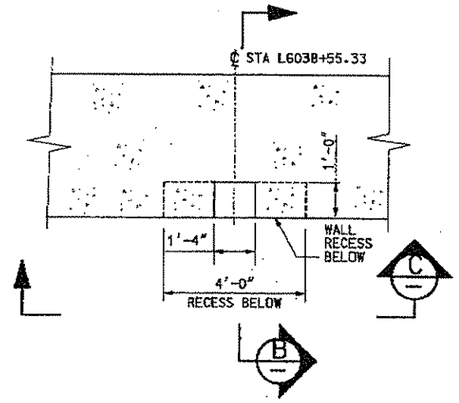

DETAIL 2 (TN327)
SCALE: 1/2"=1'-0"
2' 1' 0 2'

NOTES:

1. SEE DRAWINGS TN100 AND TN101 FOR GENERAL NOTES.
2. SEE DRAWING TN447 FOR REINFORCEMENT REQUIREMENTS AT WALL RECESSES.
3. SEE CONTRACT NSC-009 AND NSC-016 FOR DRY STANDPIPE AND CONDUIT REQUIREMENTS.

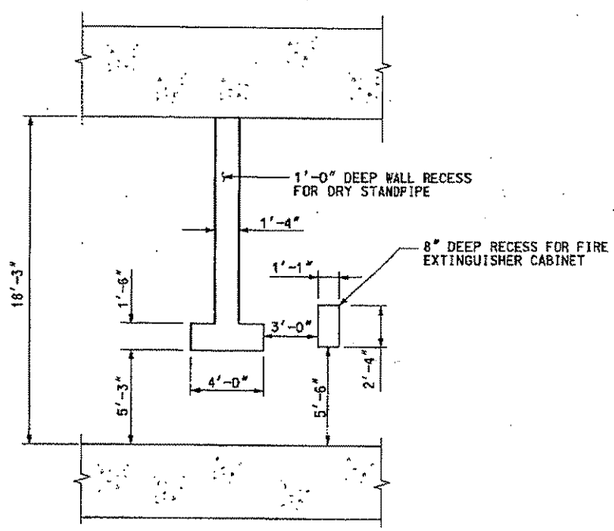

SECTION C
SCALE: 1/4"=1'-0"
4' 2' 0 4'

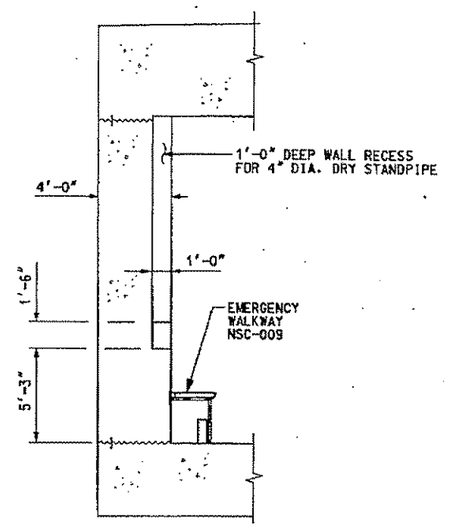

SECTION B
SCALE: 1/4"=1'-0"
4' 2' 0 4'

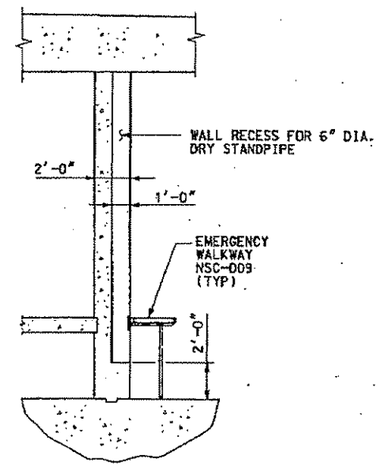

SECTION A
SCALE: 1/4"=1'-0"
4' 2' 0 4'

NO.	DATE	DESCRIPTION

REVISIONS

THE PREPARATION OF THIS DOCUMENT HAS BEEN FINANCED IN PART THROUGH A GRANT FROM THE FEDERAL TRANSIT ADMINISTRATION, U.S. DEPARTMENT OF TRANSPORTATION, UNDER THE URBAN MASS TRANSPORTATION ACT OF 1964, AS AMENDED, FOR THE PORT AUTHORITY OF ALLEGHENY COUNTY, PENNSYLVANIA.

COMMONWEALTH OF PENNSYLVANIA REGISTERED PROFESSIONAL ENGINEER PETER DENNIS MAURITZ PE37116

SIGNATURE

DMJM HARRIS | AECOM
FOUR GATEWAY CENTER
20TH FLOOR
PITTSBURGH, PA. 15222

APPROVED — DATE 11-2-05

DESIGNED	KV
DRAWN	NPD
CHECKED	PDM
IN CHARGE	PAR
DATE	NOV. 2, 2005
SCALE	AS SHOWN

PORT AUTHORITY OF ALLEGHENY COUNTY
PITTSBURGH PENNSYLVANIA

NORTH SHORE CONNECTOR
ALLEGHENY RIVER TUNNEL LAUNCH PIT TO RECEIVING PIT
DRY STANDPIPE NICHE DETAILS

PORT AUTHORITY

CONTRACT NO. NSC-003
DWG. NO. TN423 SHT. 152

10/25/2005 9:
m:\nsf\final\pw\tunnel\03tn423.dgn

NOTES:

1. SEE DRAWINGS TN100 AND TN101 FOR GENERAL NOTES.

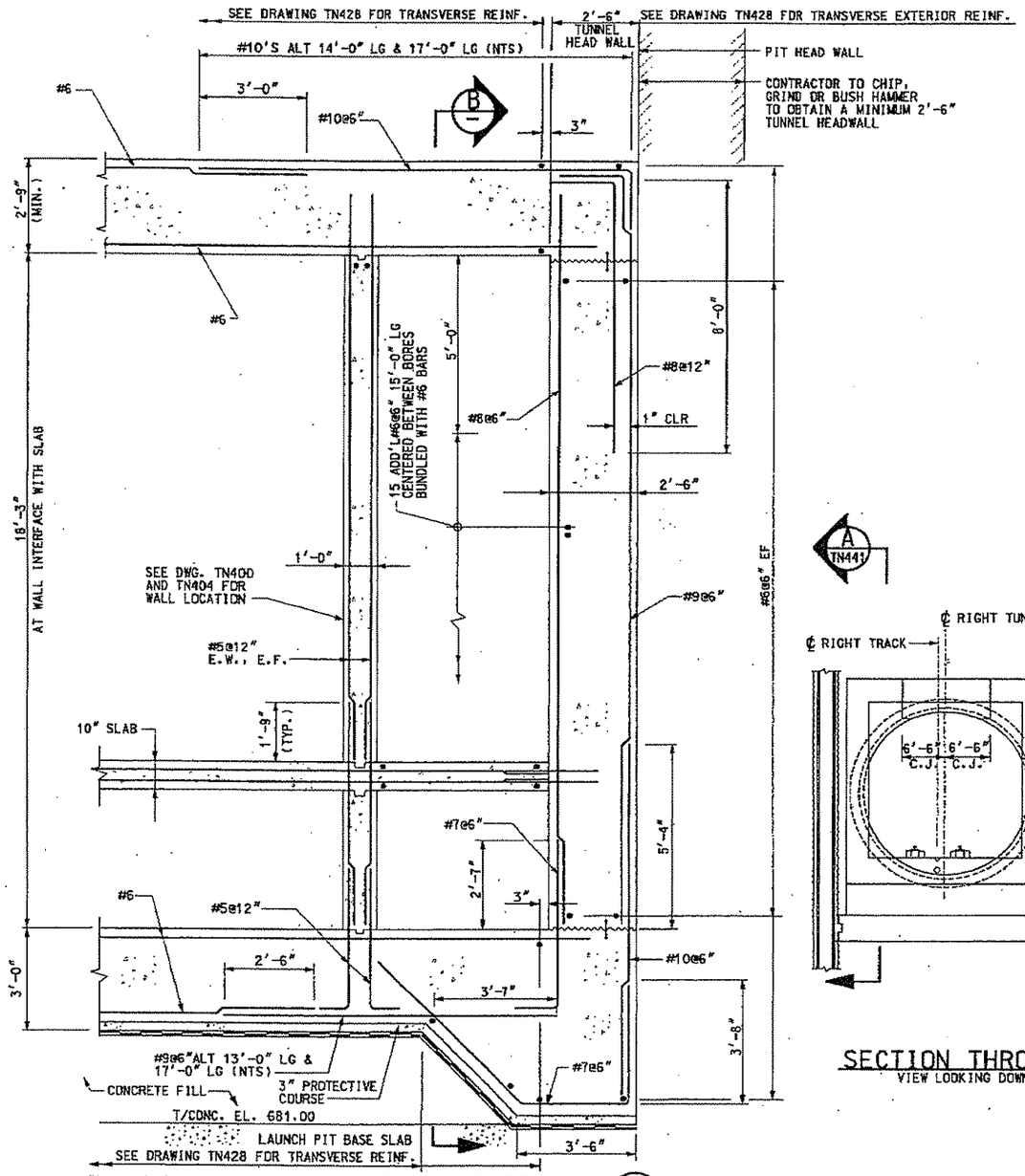

TUNNEL HEAD WALL BETWEEN BORES (C)

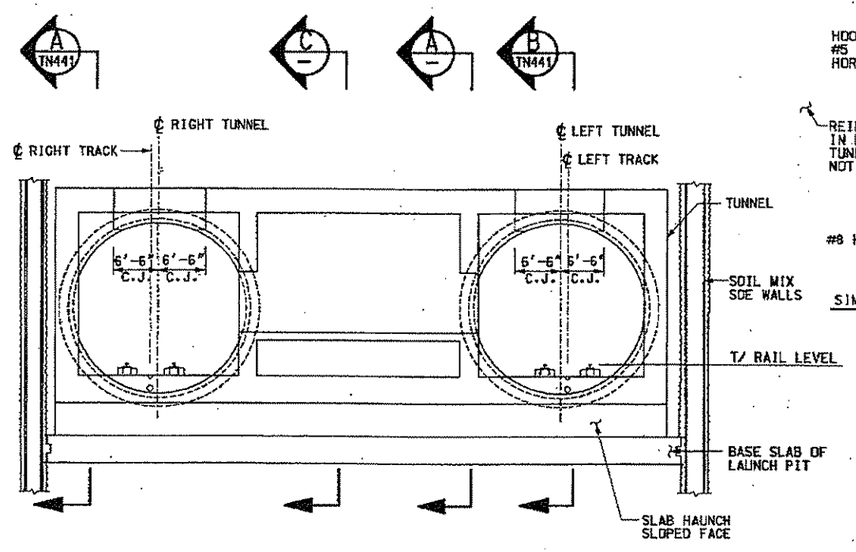

SECTION THROUGH LAUNCH PIT (B TN425)
VIEW LOOKING DOWN STATION AT STA L6036+87.50
NTS

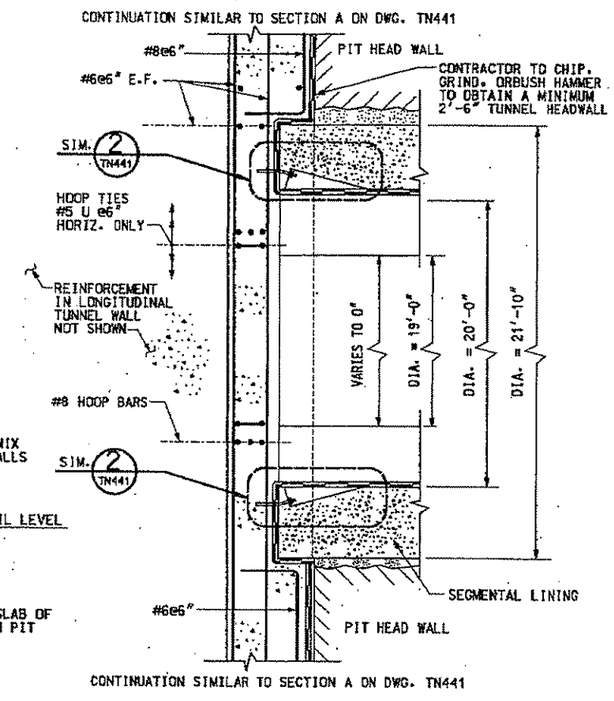

SECTION
HEAD WALL OPENING TO 10'-11" OFF BORE ℄ (A)
SCALE: 1/2"=1'-0"
4' 2' 0 1'

NO.	DATE	DESCRIPTION

REVISIONS

THE PREPARATION OF THIS DOCUMENT HAS BEEN FINANCED IN PART THROUGH A GRANT FROM THE FEDERAL TRANSIT ADMINISTRATION, U.S. DEPARTMENT OF TRANSPORTATION, UNDER THE URBAN MASS TRANSPORTATION ACT OF 1964, AS AMENDED, FOR THE PORT AUTHORITY OF ALLEGHENY COUNTY, PENNSYLVANIA.

COMMONWEALTH OF PENNSYLVANIA PROFESSIONAL ENGINEER PETER DENNIS MAURITZ PE027110 SIGNATURE

DMJM HARRIS | AECOM
FOUR GATEWAY CENTER
20TH FLOOR
PITTSBURGH, PA. 15222

APPROVED 11-2-05 DATE

DESIGNED	RHG
DRAWN	DXC
CHECKED	WBT
IN CHARGE	PAR
DATE	NOV. 2, 2005
SCALE	AS SHOWN

PORT AUTHORITY OF ALLEGHENY COUNTY
PITTSBURGH PENNSYLVANIA

NORTH SHORE CONNECTOR
ALLEGHENY RIVER TUNNEL LAUNCH PIT TO RECEIVING PIT
REINFORCING SECTION AND DETAILS HEADWALL AT STA L6036+85.00
SHEET 1 OF 2

PORT AUTHORITY

CONTRACT NO. NSC-003
DWG. NO. TN440 SHT. 168

10/25/2005 size
n:\rail\final\gw\tunnel\031tn440.dgn

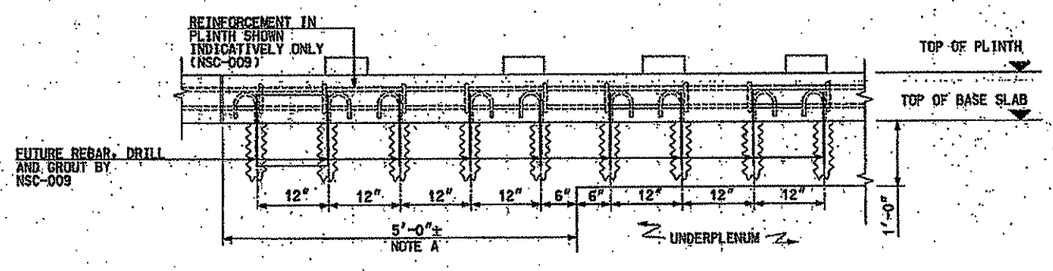

DETAIL
LONGITUDINAL SECTION THRU PLINTH (1)

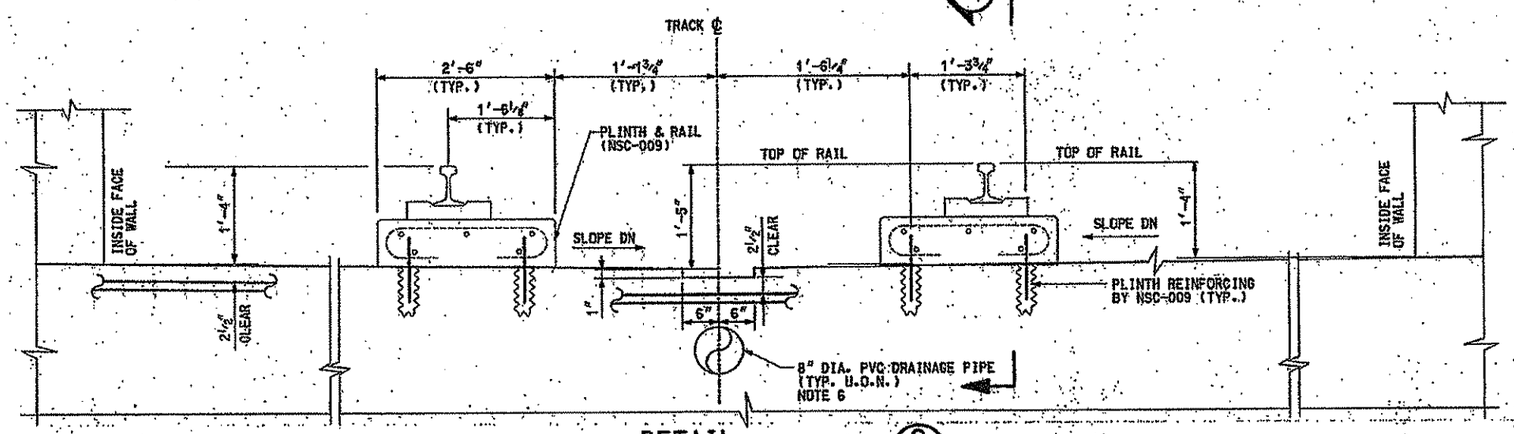

DETAIL
BASE SLAB TYPICAL DETAILS (2) TN442 TN443 THRU TN455

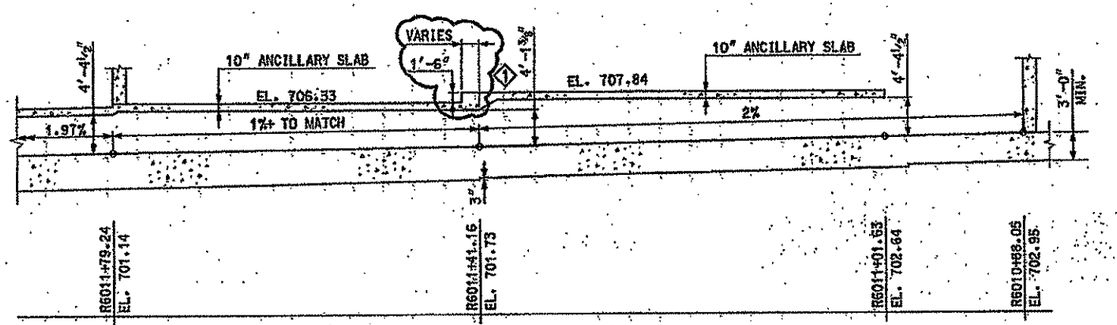

SECTION
BASE SLAB PROFILE OF ANCILLARY AREA (A) TN418
SECTION ALONG RIGHT TRACK WALL TO SLAB INTERSECTION

NOTES:

1. SEE DRAWINGS TN100 AND TN101 FOR GENERAL NOTES.
2. FOR DETAILS OF DRAINAGE PIPES, SEE PL SERIES DRAWINGS.
3. WORK THIS DRAWING WITH TN510 THRU TN529.
4. DRAPE TOP SLAB TRANSVERSE STEEL BELOW DRAINAGE TROUGH. ADJUST STANDEES TO SUIT.
5. WHERE EMBEDDED ITEMS IN THE SLAB ARE LESS THAN 12 INCHES, PROVIDE THREADED DOWEL BAR SPLICERS.

FUTURE CONTRACT:

A. AVOID PLACING PLINTH DISCONTINUITIES WITHIN 5 FEET OF THE UNDERTRACK PLENUMS OR ELECTRICAL CHASE.

B. UNDER NO CIRCUMSTANCE SHALL EXISTING SLAB REINFORCING BE CUT DURING THE DRILL AND GROUT PROCESS. USE REINFORCING LOCATORS OR LOCALLY CHIP TO EXPOSE.

NO.	DATE	DESCRIPTION
1	3/21/08	ADDENDUM 5 - DRAWING MODIFIED

REVISIONS

THE PREPARATION OF THIS DOCUMENT HAS BEEN FINANCED IN PART THROUGH A GRANT FROM THE FEDERAL TRANSIT ADMINISTRATION, U.S. DEPARTMENT OF TRANSPORTATION, UNDER THE URBAN MASS TRANSPORTATION ACT OF 1964, AS AMENDED, FOR THE PORT AUTHORITY OF ALLEGHENY COUNTY, PENNSYLVANIA.

REGISTERED PROFESSIONAL ENGINEER PETER DENNIS MARKITZ — SIGNATURE

DMJM HARRIS | AECOM
FOUR GATEWAY CENTER
20TH FLOOR
PITTSBURGH, PA. 15222

APPROVED — DATE 3/21/08

DESIGNED	CCB
DRAWN	DC
CHECKED	MBT
IN CHARGE	DPH
DATE	FEB 1, 2008
SCALE	NTS

PORT AUTHORITY OF ALLEGHENY COUNTY
PITTSBURGH PENNSYLVANIA

NORTH SHORE CONNECTOR
GATEWAY STATION SHELL
BASE SLAB PROFILE
AND LONGITUDINAL SECTION THRU PLINTH

Port Authority

CONTRACT NO. NSC-004R
DWG. NO. TN104 SHT. 60

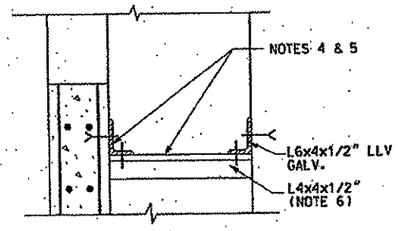

DETAIL 10
CONNECTION AT SMOKE CHAMBER WALLS
NTS

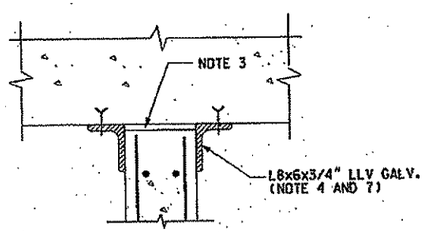

DETAIL 9
CONNECTION DETAIL AT SMOKE CHAMBER WALL
NTS

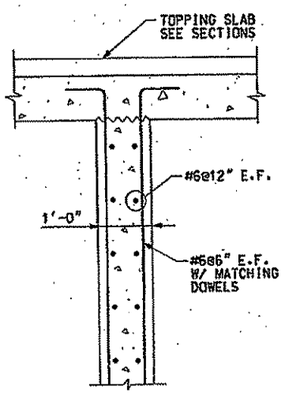

DETAIL 5
TYPICAL 12" WALL (UNDER PLATFORM REINFORCING

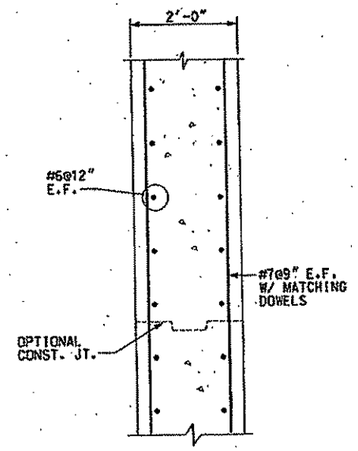

DETAIL 8
TYPICAL 24" INTERIOR WALL
U.O.N.

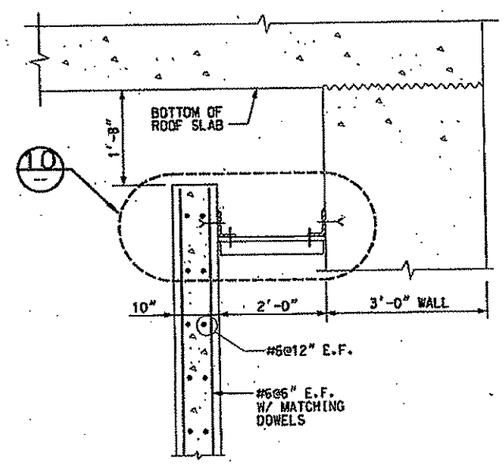

DETAIL 4
TYPICAL 10" WALL REINFORCING
SECTION CUT @ MURAL LOCATION

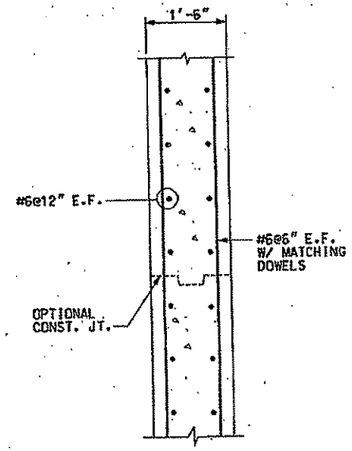

DETAIL 7
TYPICAL 18" WALL REINFORCING
U.O.N.

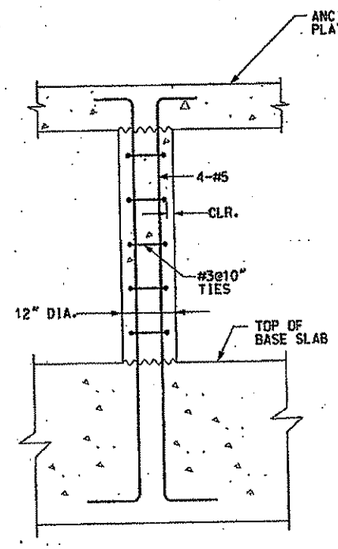

DETAIL 3
TYPICAL 12" COLUMN REINFORCING IN ANCILLARY AREA

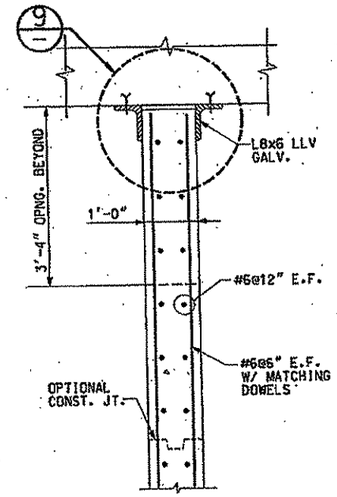

DETAIL 6
TYPICAL 12" WALL REINFORCING
U.O.N.

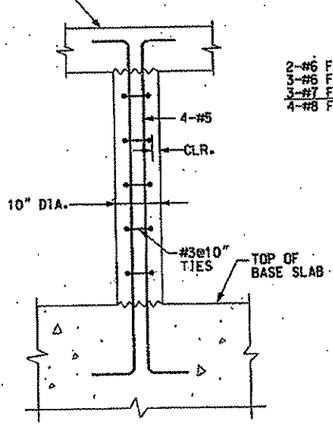

DETAIL 2
TYPICAL 10" COLUMN REINFORCING

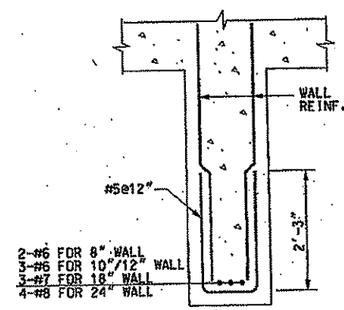

DETAIL 11
HEADER/DETAIL FOOTER AT WALL DOOR/LOOVER OPENINGS

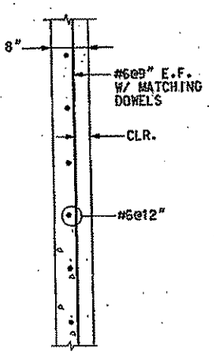

DETAIL 1
TYPICAL 8" WALL REINFORCING

NOTES:

1. FOR GENERAL NOTES, SEE DRAWINGS TN100 AND TN101.
2. THE REBAR DETAILS SHOWN ON THIS SHEET ARE APPLICABLE UNLESS OTHERWISE NOTED OR REBAR DETAIL IS SHOWN ELSEWHERE.
3. FURNISH FIRE STOP MATERIAL IN 1" GAP. ANGLES MUST BE SNUG TO WALL FACE.
4. ANGLES SHOWN ON THIS DRAWING ARE TO BE ASTM A36, GALVANIZED INSTALL USING 3/4" DIAMETER HILTI KWIK BOLTS OR EQUIVALENT AT 18 INCHES ON CENTER. STOP ANGLES 1/2" SHORT OF WALL OPENINGS. SEAL GAP WITH APPROVED FIRE STOPPING SEALANT.
5. THIS ASSEMBLY WILL BE USED WHERE ATTACHMENT TO THE ROOF IS NOT POSSIBLE.
6. 3/8" DIAMETER ASTM A325 BOLTS AT 18" ON CENTER TO BE CENTERED BETWEEN WALL ANCHORS.
7. ANGLES SHALL BE REPLACED WITH BENT PLATE AT SMOKE HOOD.
8. SUPPLY ANGLES IN ACCORDANCE WITH TP05520.

NO.	DATE	DESCRIPTION

REVISIONS

THE PREPARATION OF THIS DOCUMENT HAS BEEN FINANCED IN PART THROUGH A GRANT FROM THE FEDERAL TRANSIT ADMINISTRATION, U.S. DEPARTMENT OF TRANSPORTATION, UNDER THE URBAN MASS TRANSPORTATION ACT OF 1964, AS AMENDED, FOR THE PORT AUTHORITY OF ALLEGHENY COUNTY, PENNSYLVANIA.

COMMONWEALTH OF PENNSYLVANIA REGISTERED PROFESSIONAL PETER DENNIS MARKOVITZ CHAPTER REGISTRATION REQUIRED

SIGNATURE

DMJM HARRIS | AECOM
FOUR GATEWAY CENTER
20TH FLOOR
PITTSBURGH, PA. 15222

APPROVED — DATE 2/1/08

DESIGNED	RN
DRAWN	NPD
CHECKED	WBT
IN CHARGE	DPH
DATE	FEB 1, 2008
SCALE	3/4"=1'-0"

PORT AUTHORITY OF ALLEGHENY COUNTY
PITTSBURGH PENNSYLVANIA

NORTH SHORE CONNECTOR
GATEWAY STATION SHELL
MISCELLANEOUS INTERIOR WALL DETAILS

Port Authority

CONTRACT NO. NSC-004 R
DWG.NO. TN105 SHT. 61

$DATE$ $TIME$
$FILE$

NOTES:

1. FOR GENERAL NOTES, SEE DRAWINGS TN100 AND TN101.
2. COORDINATE ALL CONDUIT LAYOUT WITH NSC-009/010. SEE TN581 THRU TN589.

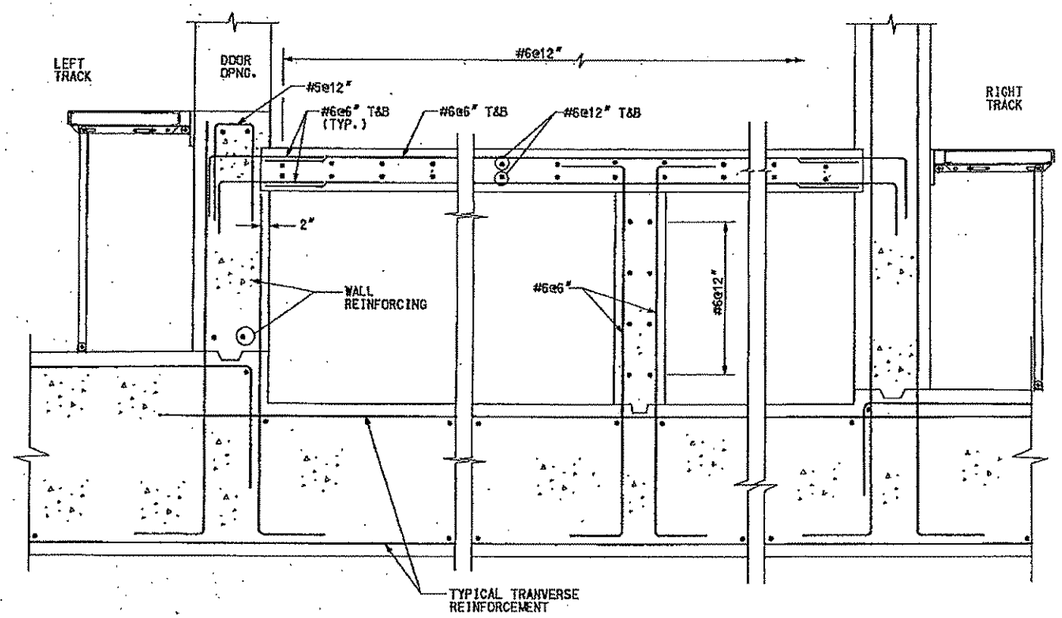

DETAIL 2
ANCILLARY SLAB

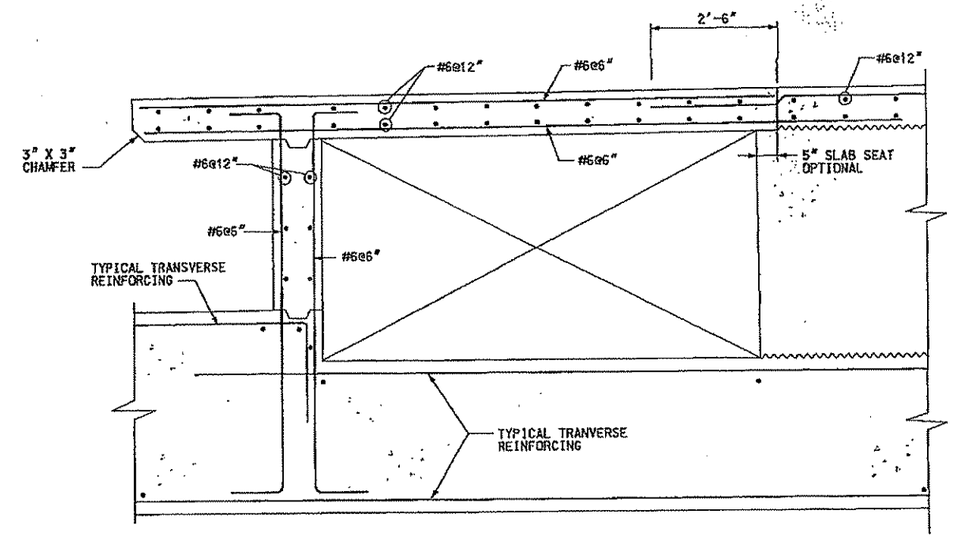

DETAIL 1
PLATFORM SLAB

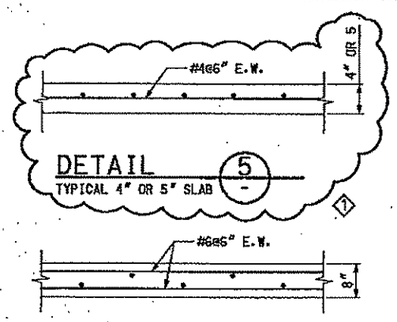

DETAIL 5
TYPICAL 4" OR 5" SLAB

DETAIL 6
TYPICAL 8" SLAB

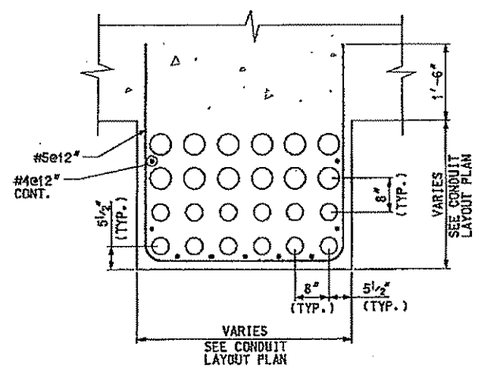

DETAIL 4
GENERIC CONDUIT DUCT BANK

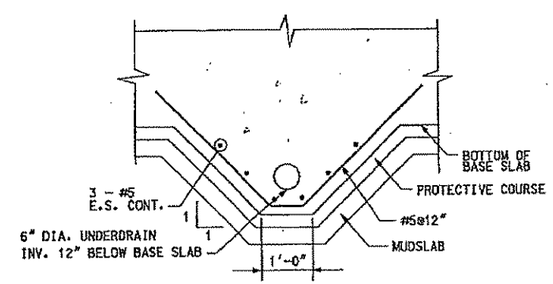

DETAIL 3
UNDERPLENUM DRAIN ENCASEMENT

NO.	DATE	DESCRIPTION
1	3/14/08	ADDENDUM 3 - DRAWING MODIFIED

REVISIONS

THE PREPARATION OF THIS DOCUMENT HAS BEEN FINANCED IN PART THROUGH A GRANT FROM THE FEDERAL TRANSIT ADMINISTRATION, U.S. DEPARTMENT OF TRANSPORTATION, UNDER THE URBAN MASS TRANSPORTATION ACT OF 1964, AS AMENDED. FOR THE PORT AUTHORITY OF ALLEGHENY COUNTY, PENNSYLVANIA.

REGISTERED PROFESSIONAL ENGINEER PETER DENNIS MAURITZ COMMONWEALTH OF PENNSYLVANIA
SIGNATURE

DMJM HARRIS | AECOM
FOUR GATEWAY CENTER
20TH FLOOR
PITTSBURGH, PA. 15222

APPROVED 3/14/08 DATE

DESIGNED	RN
DRAWN	NPD
CHECKED	MBT
IN CHARGE	DPH
DATE	FEB 1, 2008
SCALE	3/4"=1'-0"

PORT AUTHORITY OF ALLEGHENY COUNTY
PITTSBURGH PENNSYLVANIA

NORTH SHORE CONNECTOR
GATEWAY STATION SHELL
MISCELLANEOUS PLATFORM DETAILS

Port Authority

CONTRACT NO. NSC-004R
DWG. NO. TN106 SHT. 62

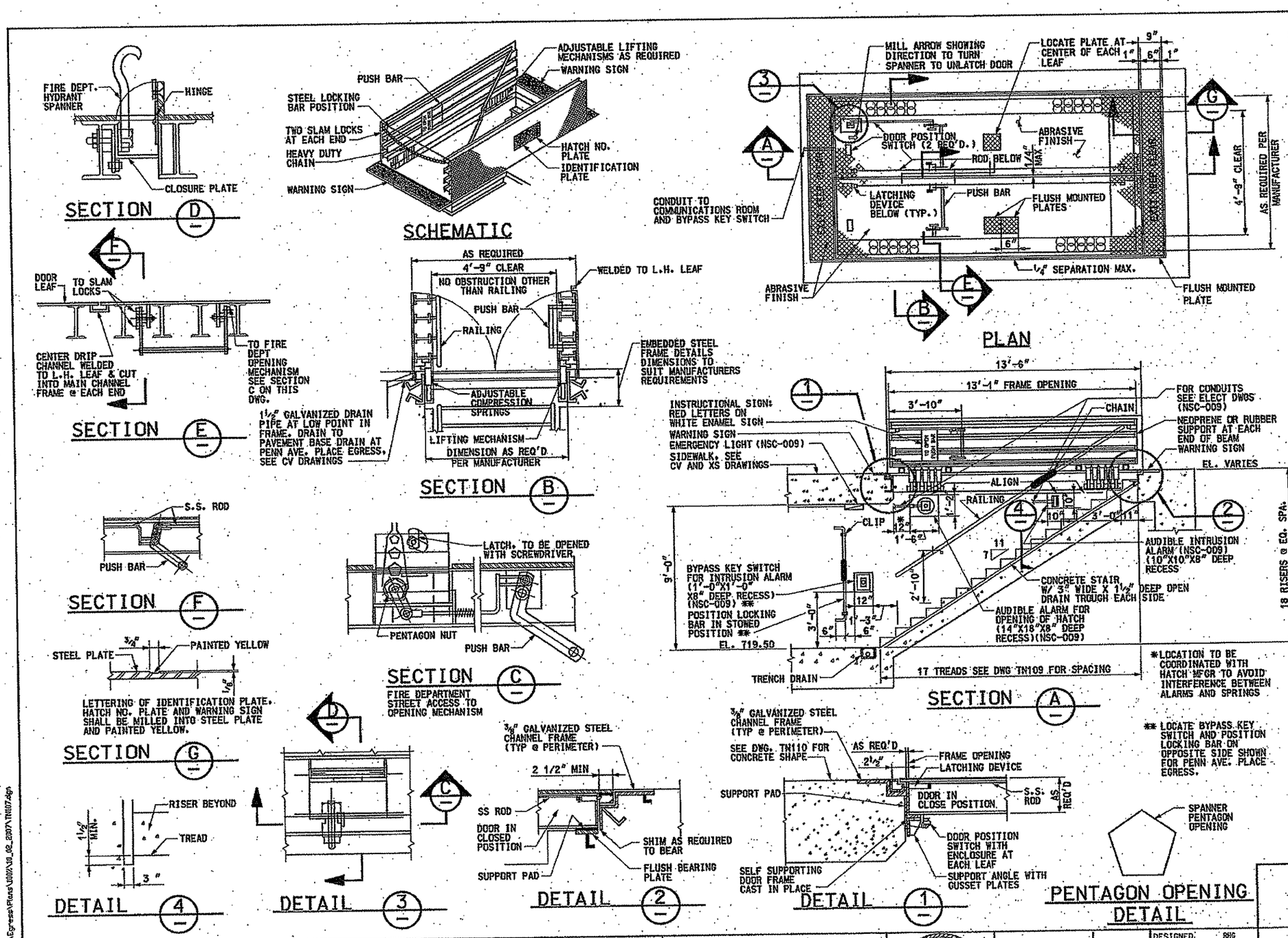

NOTES:

1. DOORS, FRAMES AND WARNING SIGNS SHALL BE INSTALLED IN ONE PLANE GENERALLY CONFORMING TO SIDEWALK CROSS SLOPES.
2. DOORS SHALL HAVE 316 STAINLESS STEEL HINGES WITH STAINLESS STEEL HINGE PINS.
3. EACH DOOR SHALL HAVE LATCHING DEVICES TO HOLD DOOR IN CLOSED POSITION. WORKING PARTS OF LATCHING DEVICES SHALL BE FABRICATED FROM BRASS, BRONZE OR STAINLESS STEEL.
4. WHEN LATCHING DEVICE IS RELEASED, DOORS SHALL BE OPENED BY MEANS OF SPRINGS AND SHALL BE HELD OPEN BY SAME. THESE SPRINGS SHALL BE ADJUSTABLE AND ADJUSTED FOR SMOOTH OPENING ACTION WITHOUT HAVING DOORS FLY OPEN SUDDENLY.
5. DOORS SHALL BE CLOSED MANUALLY.
6. LATCHING DEVICE SHALL BE RELEASED BY PUSHING BAR FROM THE EXIT PASSAGE OR BY A PENTAGON SHAPED KEY FROM OUTSIDE.
7. DOORS, FRAMES, IDENTIFICATION PLATES, HATCH NO. PLATES AND WARNING SIGNS SHALL BE HOT DIPPED GALVANIZED AFTER FABRICATION.
8. PROVIDE DOOR POSITION SWITCH WITH ENCLOSURE AT EACH LEAF.
9. PROVIDE AUDIBLE ALARM IN RECESS NEAR HATCH INTERCONNECTED TO DOOR POSITION SWITCHES. (NSC-009)
10. NUMBER AND CONFIGURATION OF LIFTING DEVICES AND HINGES TO BE DETERMINED BY MANUFACTURER.
11. THE LATCHING DEVICE SHALL BE SPRING ASSISTED FOR AUTOMATIC CLOSURE.
12. ENTRANCE FROM THE SURFACE SIDE SHALL BE PROVIDED BY FIRE DEPARTMENT HYDRANT SPANNER.
13. LATCHING/OPENING DEVICES SHALL COMPLY WITH NFPA 130, 2003 EDITION, 6.2.4.5.1.
14. DOOR LEAF, IDENTIFICATION PLATES, HATCH NO. PLATES AND WARNING SIGNS SHALL BE SKID RESISTANT TYPE ALUMINUM PLATES. TOP SURFACE OF THE PLATES SHALL HAVE A STATIC COEFFICIENT OF FRICTION OF 0.5 FOR BOTH WET AND DRY CONDITIONS AND SHALL CONFORM TO REQUIREMENTS OF STANDARD PLAN S-601-2 OF UBC.
15. CONTRACTOR IS RESTRICTED TO A MINIMUM USE OF EXIT HATCHES DURING CONSTRUCTION BUT THE CONTRACTOR WILL BE RESPONSIBLE TO REPAIR ALL DAMAGE PRIOR TO FINAL ACCEPTANCE AND VERIFY THAT THE HATCHES ARE OPERATIONAL AND THAT THE FORCE REQUIRED TO OPEN OR CLOSE THE HATCHES IS WITHIN SPECIFIED LIMITS.
16. THE HATCH IS TO BE CLOSED WHEN BEING HANDLED. DO NOT RACK OR TWIST FRAME WHEN SETTING, SHIM AS REQUIRED TO ASSURE THAT HATCH RESTS ON THE FRAME.
17. CONCRETE DETAILING SHOWN IS FOR PENN AVE. PLACE EGRESS. HATCH DETAILING IS TYPICAL FOR BOTH EMERGENCY EGRESS.
18. FOR GENERAL NOTES, SEE DRAWINGS TN100 AND TN101.

NO.	DATE	DESCRIPTION

REVISIONS

THE PREPARATION OF THIS DOCUMENT HAS BEEN FINANCED IN PART THROUGH A GRANT FROM THE FEDERAL TRANSIT ADMINISTRATION, U.S. DEPARTMENT OF TRANSPORTATION, UNDER THE URBAN MASS TRANSPORTATION ACT OF 1964, AS AMENDED, FOR THE PORT AUTHORITY OF ALLEGHENY COUNTY, PENNSYLVANIA.

COMMONWEALTH OF PENNSYLVANIA REGISTERED PROFESSIONAL MATTHEW JACOB PERCE
SIGNATURE

DMJM HARRIS | AECOM
FOUR GATEWAY CENTER
20TH FLOOR
PITTSBURGH, PA. 15222

APPROVED — DATE 2/1/08

DESIGNED	RHG
DRAWN	DHC
CHECKED	MJP
IN CHARGE	DPH
DATE	FEB 1, 2008
SCALE	NTS

PORT AUTHORITY OF ALLEGHENY COUNTY
PITTSBURGH PENNSYLVANIA

NORTH SHORE CONNECTOR
GATEWAY STATION SHELL
EMERGENCY EGRESS
HATCH DETAIL

Port Authority

CONTRACT NO. NSC-004 R.
DWG. NO. TN107 SHT. 63

1/29/2008 11:37:49 AM
N:\NSR\Final\GA\GV C:\C\Sr-\Egress\Plans\U02\U0_02_2007\TN107.dgn

NOTES:

1. FOR GENERAL NOTES, SEE DWG TN100 AND TN101.
2. ALL HAND RAILS, BRACKETS AND PLATES SHALL CONFORM TO ASTM A36 AND OR ASTM A501.
3. ALL STEEL FOR HANDRAIL ASSEMBLY SHALL BE GALVANIZED IN ACCORDANCE WITH TP 05720.
4. NOMINAL SCHEDULE 40, 1¼" DIAMETER PIPE HANDRAIL, 1.66 INCHES OUTSIDE DIAMETER

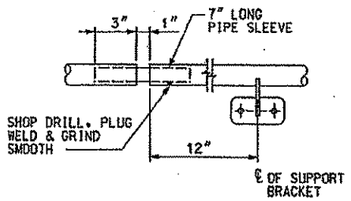

EXPANSION DETAIL (3)

SCALE 3"=1'-0"
3" 1 1/2" 0 3"

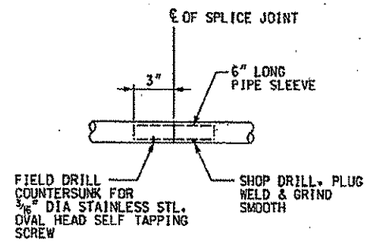

SPLICE DETAIL (2)

SCALE 3"=1'-0"
3" 1 1/2" 0 3"

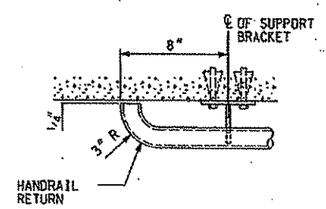

PLAN DETAIL - HANDRAIL RETURN (1)

SCALE 3"=1'-0"
3" 1 1/2" 0 3"

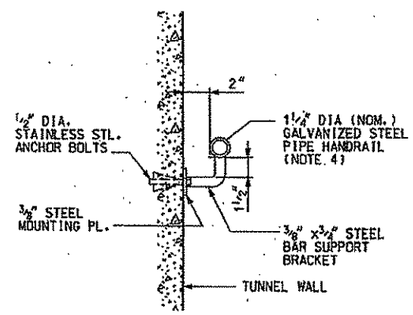

SECTION-WALL BRACKET DETAIL (5)

SCALE 3"=1'-0"
3" 1 1/2" 0 3"

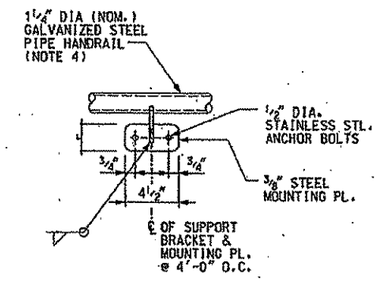

ELEVATION-WALL BRACKET DETAIL (4)

SCALE 3"=1'-0"
3" 1 1/2" 0 3"

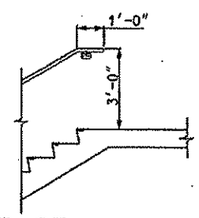

TOP OF STAIR DETAIL (8)

SCALE 3/8"=1'-0"
2' 0 2'

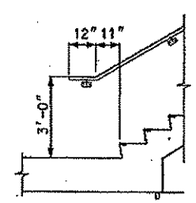

BOTTOM OF STAIR DETAIL (7)

SCALE 3/8"=1'-0"
2' 0 2'

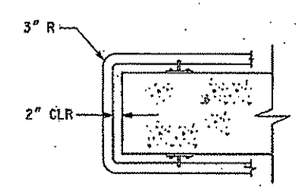

PLAN DETAIL- HANDRAIL RETURN AROUND WALL (6)

SCALE 3/4"=1'-0"
20' 10' 0 20'

NO.	DATE	DESCRIPTION

REVISIONS

THE PREPARATION OF THIS DOCUMENT HAS BEEN FINANCED IN PART THROUGH A GRANT FROM THE FEDERAL TRANSIT ADMINISTRATION, U.S. DEPARTMENT OF TRANSPORTATION, UNDER THE URBAN MASS TRANSPORTATION ACT OF 1964, AS AMENDED, FOR THE PORT AUTHORITY OF ALLEGHENY COUNTY, PENNSYLVANIA.

REGISTERED PROFESSIONAL ENGINEER PETER DENNIS MAURITZ COMMONWEALTH OF PENNSYLVANIA

SIGNATURE

DMJM HARRIS | AECOM
FOUR GATEWAY CENTER
20TH FLOOR
PITTSBURGH, PA. 15222

APPROVED — DATE 2/1/08

DESIGNED	RMG
DRAWN	NPD
CHECKED	WBT
IN CHARGE	DPH
DATE	FEB 1, 2008
SCALE	AS SHOWN

PORT AUTHORITY OF ALLEGHENY COUNTY
PITTSBURGH PENNSYLVANIA

NORTH SHORE CONNECTOR
ALLEGHENY RIVER TUNNEL LAUNCH PIT TO RECEIVING PIT
EMERGENCY EGRESS STAIRWAY
MISCELLANEOUS DETAILS

Port Authority

CONTRACT NO. NSC-004R
DWG. NO. TN108 SHT. 64

$DATE$ $TIME$
$FILE$

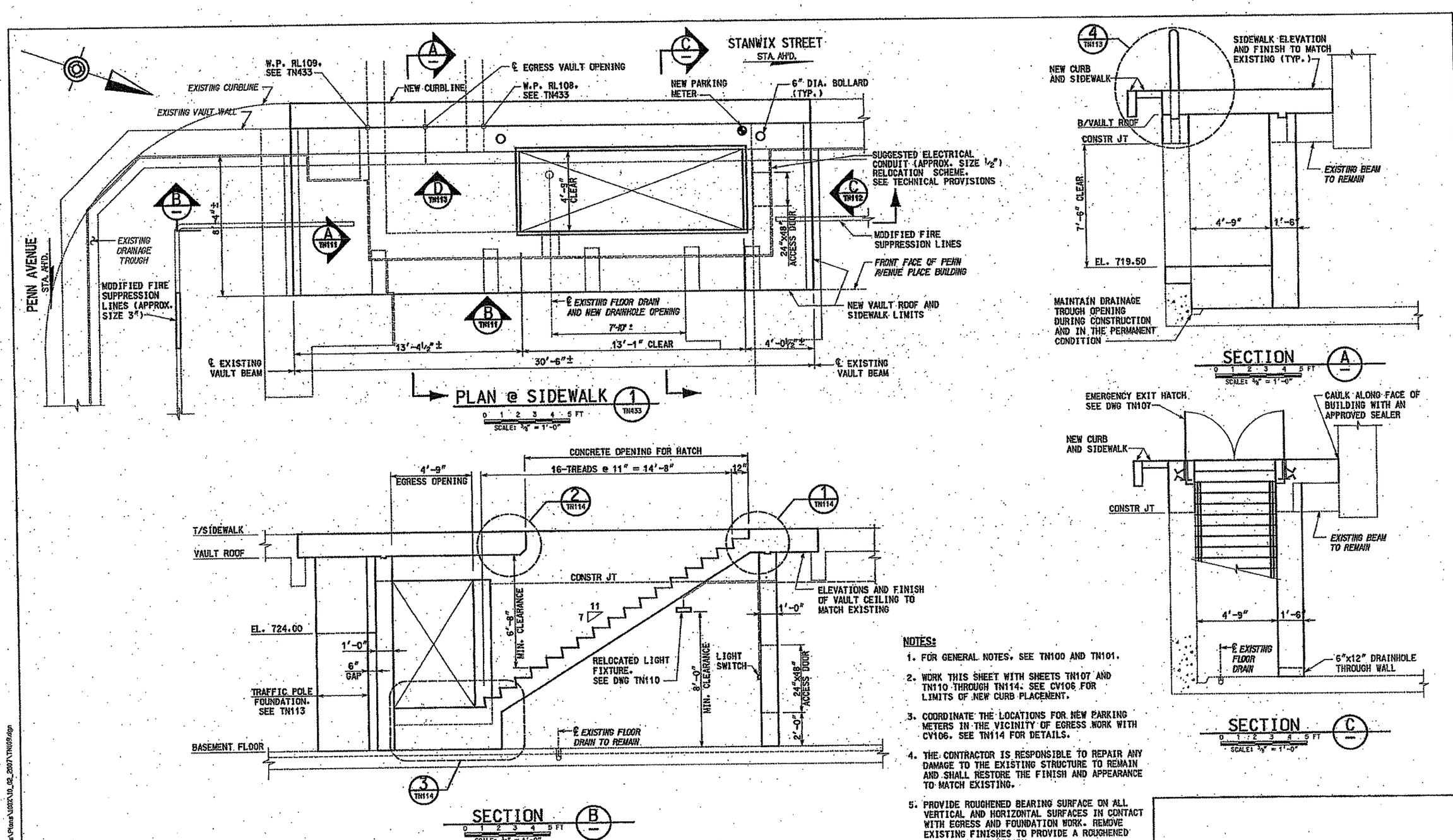

NOTES:

1. FOR GENERAL NOTES, SEE TN100 AND TN101.
2. WORK THIS SHEET WITH SHEETS TN107 AND TN110 THROUGH TN114. SEE CV106 FOR LIMITS OF NEW CURB PLACEMENT.
3. COORDINATE THE LOCATIONS FOR NEW PARKING METERS IN THE VICINITY OF EGRESS WORK WITH CV106. SEE TN114 FOR DETAILS.
4. THE CONTRACTOR IS RESPONSIBLE TO REPAIR ANY DAMAGE TO THE EXISTING STRUCTURE TO REMAIN AND SHALL RESTORE THE FINISH AND APPEARANCE TO MATCH EXISTING.
5. PROVIDE ROUGHENED BEARING SURFACE ON ALL VERTICAL AND HORIZONTAL SURFACES IN CONTACT WITH EGRESS AND FOUNDATION WORK. REMOVE EXISTING FINISHES TO PROVIDE A ROUGHENED SURFACE AS NECESSARY.

NO.	DATE	DESCRIPTION

REVISIONS

THE PREPARATION OF THIS DOCUMENT HAS BEEN FINANCED IN PART THROUGH A GRANT FROM THE FEDERAL TRANSIT ADMINISTRATION, U.S. DEPARTMENT OF TRANSPORTATION, UNDER THE URBAN MASS TRANSPORTATION ACT OF 1964, AS AMENDED, FOR THE PORT AUTHORITY OF ALLEGHENY COUNTY, PENNSYLVANIA.

COMMONWEALTH OF PENNSYLVANIA REGISTERED PROFESSIONAL MATTHEW JACOB PENCE
SIGNATURE

DMJM HARRIS | AECOM
FOUR GATEWAY CENTER
20TH FLOOR
PITTSBURGH, PA. 15222

APPROVED — DATE 2/1/08

DESIGNED	MJP
DRAWN	BMC/PEV
CHECKED	MJP
IN CHARGE	DPH
DATE	FEB 1, 2008
SCALE	AS SHOWN

PORT AUTHORITY OF ALLEGHENY COUNTY
PITTSBURGH PENNSYLVANIA

NORTH SHORE CONNECTOR
GATEWAY STATION SHELL
PENN AVE. PLACE EMERGENCY EGRESS
GENERAL PLAN AND ELEVATION

Port Authority

CONTRACT NO. NSC-004 R
DWG. NO. TN109 SHT. 65

1/28/2008 11:07:50 AM
N:\NSC\final\GAV\GV CAD\Sta\Egress\Plans\U03\V10_02_2007\TN109.dgn

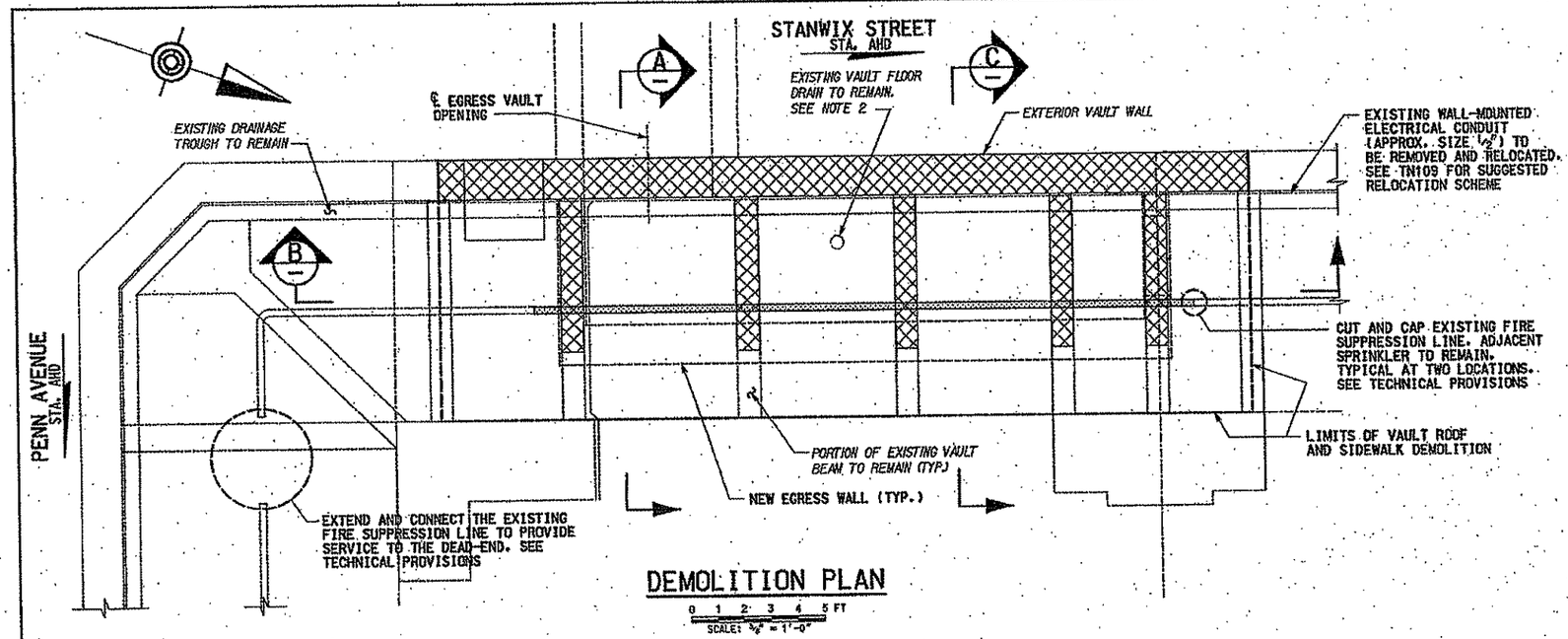

DEMOLITION PLAN

0 1 2 3 4 5 FT
SCALE: ⅜" = 1'-0"

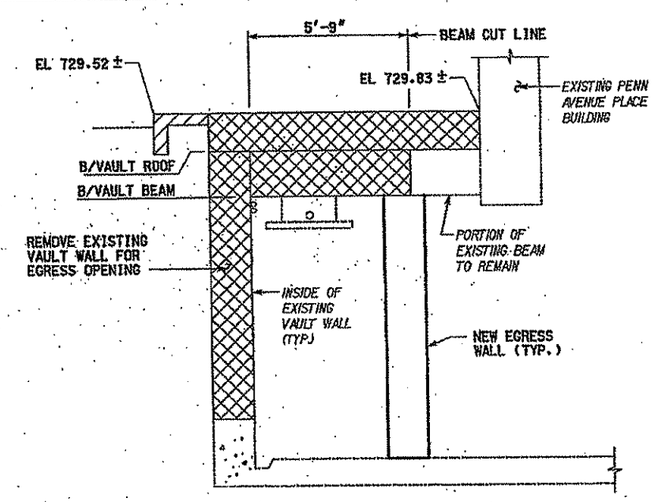

SECTION A

0 1 2 3 4 5 FT
SCALE: ⅜" = 1'-0"

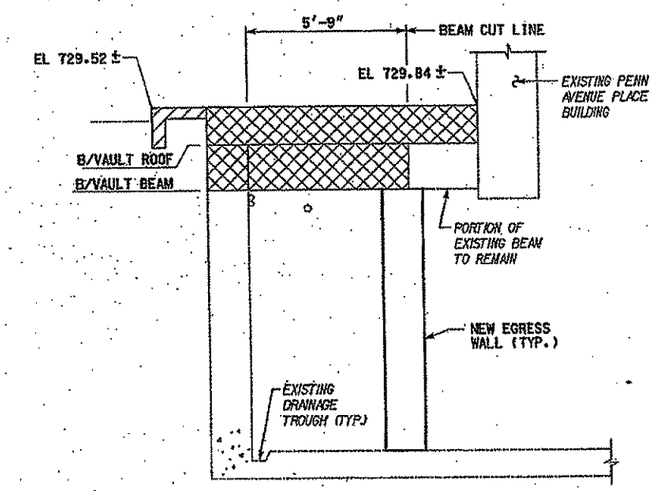

SECTION C

0 1 2 3 4 5 FT
SCALE: ⅜" = 1'-0"

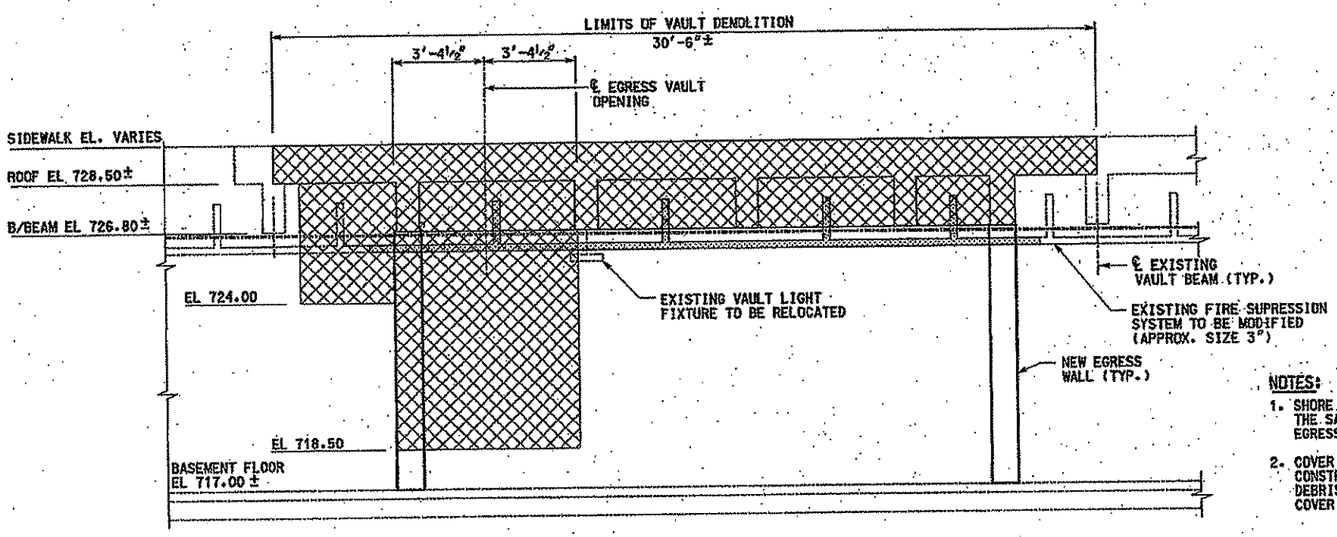

SECTION B

0 1 2 3 4 5 FT
SCALE: ⅜" = 1'-0"

NOTES:

1. SHORE EXISTING VAULT ROOF AND BEAMS TO THE SATISFACTION OF THE ENGINEER UNTIL EGRESS WALL IS IN PLACE.
2. COVER EXISTING FLOOR DRAIN DURING CONSTRUCTION TO ENSURE NO CONSTRUCTION DEBRIS ENTERS THE DRAINAGE SYSTEM. REMOVE COVER UPON COMPLETION OF CONSTRUCTION.

LIMITS OF EXISTING VAULT DEMOLITION
LIMITS OF EXISTING CURB AND SIDEWALK REMOVAL
LIMITS OF EXISTING FIRE SUPRESSION SYSTEM REMOVAL

NO.	DATE	DESCRIPTION

REVISIONS

THE PREPARATION OF THIS DOCUMENT HAS BEEN FINANCED IN PART THROUGH A GRANT FROM THE FEDERAL TRANSIT ADMINISTRATION, U.S. DEPARTMENT OF TRANSPORTATION, UNDER THE URBAN MASS TRANSPORTATION ACT OF 1964, AS AMENDED, FOR THE PORT AUTHORITY OF ALLEGHENY COUNTY, PENNSYLVANIA.

COMMONWEALTH OF PENNSYLVANIA REGISTERED PROFESSIONAL MATTHEW JACOB PIERCE ENGINEER
SIGNATURE

DMJM HARRIS | AECOM
FOUR GATEWAY CENTER
20TH FLOOR
PITTSBURGH, PA. 15222
APPROVED DATE 2/1/08

DESIGNED	MJP
DRAWN	BMC/PEV
CHECKED	MJP
IN CHARGE	DPH
DATE	FEB 1, 2008
SCALE	AS SHOWN

PORT AUTHORITY OF ALLEGHENY COUNTY
PITTSBURGH PENNSYLVANIA

NORTH SHORE CONNECTOR
GATEWAY STATION SHELL
PENN AVE. PLACE EMERGENCY EGRESS
VAULT DEMOLITION DETAILS

Port Authority

CONTRACT NO. NCS-004.R
DWG. NO. TN110 SHT. 68

1/28/2008 10:38:41 AM
N:\NSF\Final\GV\GV C&C\Str\Egress\Plans\U00\U0_02_2007\TN110.dgn

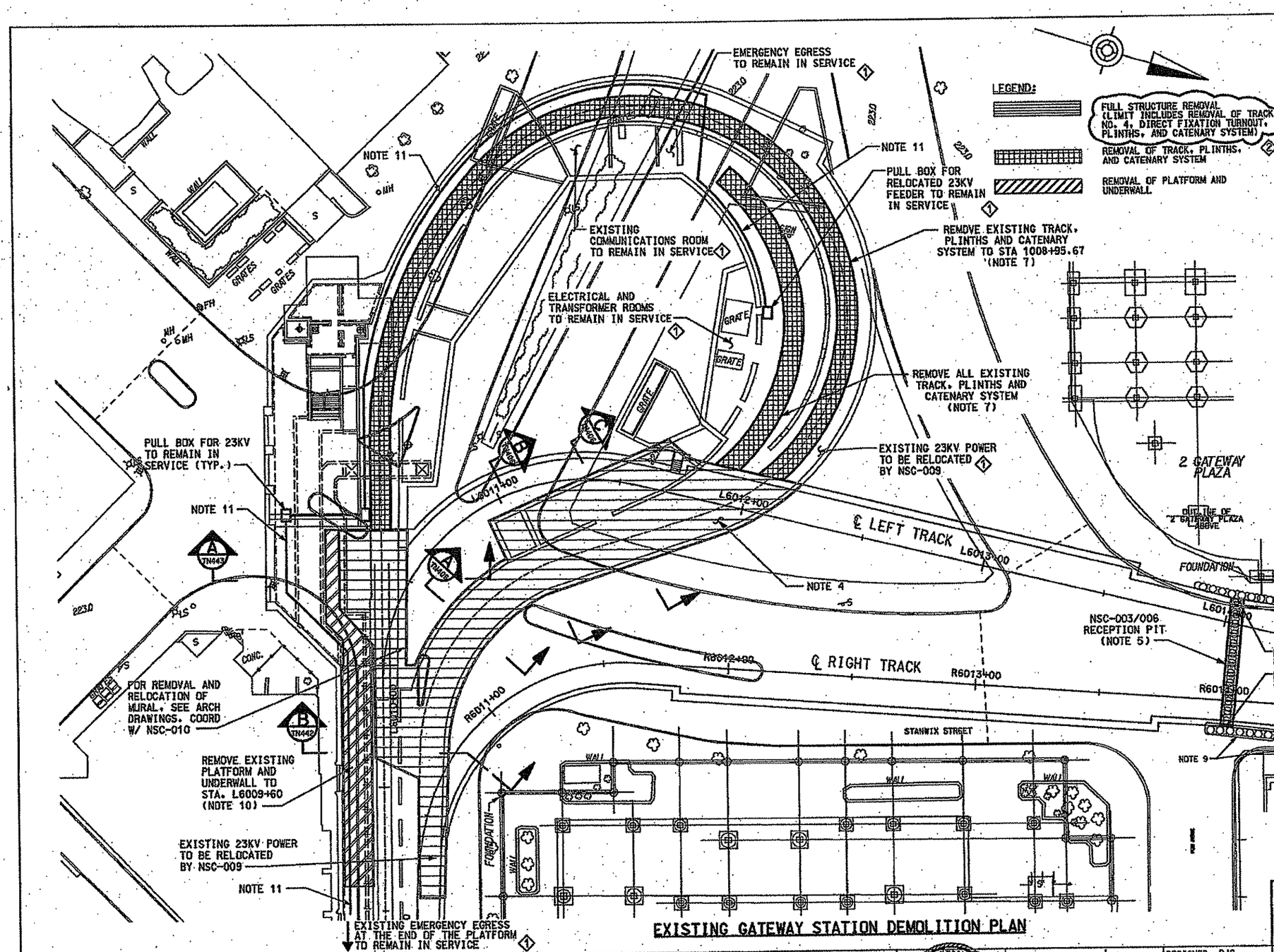

EXISTING GATEWAY STATION DEMOLITION PLAN

NOTES:

1. FOR GENERAL NOTES, SEE DRAWINGS TN100 AND TN101.
2. WORK THIS DRAWING WITH TN410 THRU TN424 FOR WORK POINTS AND DIMENSIONS.
3. ACCEPT OWNERSHIP OF GROUNDWATER CONTROL SYSTEM OBTAINED FROM NSC-003/006.
4. CROSSHATCHED AREA REPRESENTS AREA OF DEMOLITION OF EXISTING STATION SHELL. SEE LEGEND.
5. SEE CONTRACT NSC-003/006 DRAWINGS FOR LOADING AND DESIGN REQUIREMENTS IN RECEIVING PIT. MODIFY SUPPORT OF EXCAVATION ACCORDINGLY TO ADHERE TO THESE REQUIREMENTS. REMOVE RECEIVING PIT HEADWALL TO TOP OF RECIEVING PIT SLAB.
6. REMOVE EXISTING NSC-003/006 SUPPORT OF EXCAVATION WALL TO ACCOMMODATE NORTH EGRESS STAIR.
7. REMOVE EXISTING TRACK. DEMOLISH PLINTHS AND REPAIR BASE SLAB; REMOVE ALL CATENARY HARDWARE AND RETURN REQUESTED ITEMS TO PAAC PER TECHNICAL PROVISIONS. REMOVE BOLTS AND PARGE.
8. CONTRACTOR TO SHORE AND BRACE EXISTING STRUCTURAL ELEMENTS TO REMAIN THROUGH EACH PHASE OF DEMOLITION.
9. REMOVE PORTIONS OF THE RECEIVING PIT SOE TO FACILITATE UTILITY INSTALLATION.
10. PROTECT EXISTING SYSTEMS UNDER EXISTING PLATFORM DURING THE PLATFORM DEMOLITION AND THROUGHOUT THE DURATION OF THE WORK.
11. THE NSC-009 CONTRACTOR WILL BE RELOCATING THE GATEWAY STATION 23KV POWER FEEDERS (2-6" RIGID METAL) FROM THE EXISTING DUCT BANK WHICH CURRENTLY RUNS AROUND THE INBOUND PORTION OF THE TUNNEL TO THE CEILING ABOVE THE STATION PLATFORM AND OUTSIDE WALL OF THE LOOP AS SHOWN. IN ADDITION THE NSC-009 CONTRACTOR WILL BE REROUTING THE POWER AND CONTROL CABLING FOR THE EXISTING EMERGENCY VENTILATION FANS, EM-9 AND EM-10 ALONG THE SAME PATH AS THE 23 KV FEEDER RELOCATION. THE CONTRACTOR SHALL PLAN, PROTECT, AND EXECUTE ITS WORK AROUND THESE RELOCATED FACILITIES. THESE FACILITIES MUST STAY ACTIVE AND OPERATIONAL THROUGHOUT THE WORK. 7
12. THERE ARE COMMUNICATIONS CABLING AND OTHER UTILITIES LOCATED UNDER THE EXISTING GATEWAY STATION PLATFORM WHICH MUST REMAIN OPERATIONAL DURING THE WORK. THE CONTRACTOR SHALL PLAN, PROTECT, AND EXECUTE ITS WORK AROUND THESE FACILITIES THROUGHOUT THE WORK.

NO.	DATE	DESCRIPTION
2	4/3/08	ADDENDUM 7 - DRAWING MODIFIED
1	3/27/08	ADDENDUM 6 - DRAWING MODIFIED

REVISIONS

THE PREPARATION OF THIS DOCUMENT HAS BEEN FINANCED IN PART THROUGH A GRANT FROM THE FEDERAL TRANSIT ADMINISTRATION, U.S. DEPARTMENT OF TRANSPORTATION, UNDER THE URBAN MASS TRANSPORTATION ACT OF 1964, AS AMENDED. FOR THE PORT AUTHORITY OF ALLEGHENY COUNTY, PENNSYLVANIA.

REGISTERED PROFESSIONAL PETER DENNIS HARRITZ CHARGE PEZNEZ PENNSYLVANIA

SIGNATURE

DMJM HARRIS | AECOM
FOUR GATEWAY CENTER
20TH FLOOR
PITTSBURGH, PA. 15222

APPROVED 4/3/08 DATE

DESIGNED	RJS
DRAWN	NPD
CHECKED	
IN CHARGE	
DATE	FEB 1, 2008
SCALE	1"=20'-0"

20' 10' 0 20'

PORT AUTHORITY OF ALLEGHENY COUNTY
PITTSBURGH PENNSYLVANIA

NORTH SHORE CONNECTOR
GATEWAY STATION SHELL
EXISTING GATEWAY STATION
DEMOLITION PLAN

PORT AUTHORITY

CONTRACT NO. NSC-004R
DWG. NO. TN405 SHT. 74

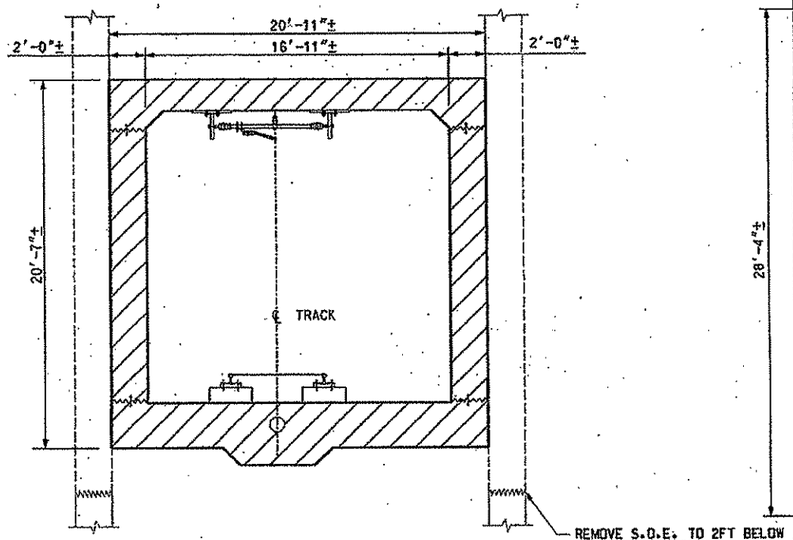

CROSS SECTION A
STA. 1002+99 TO STA. 1003+53 TN405

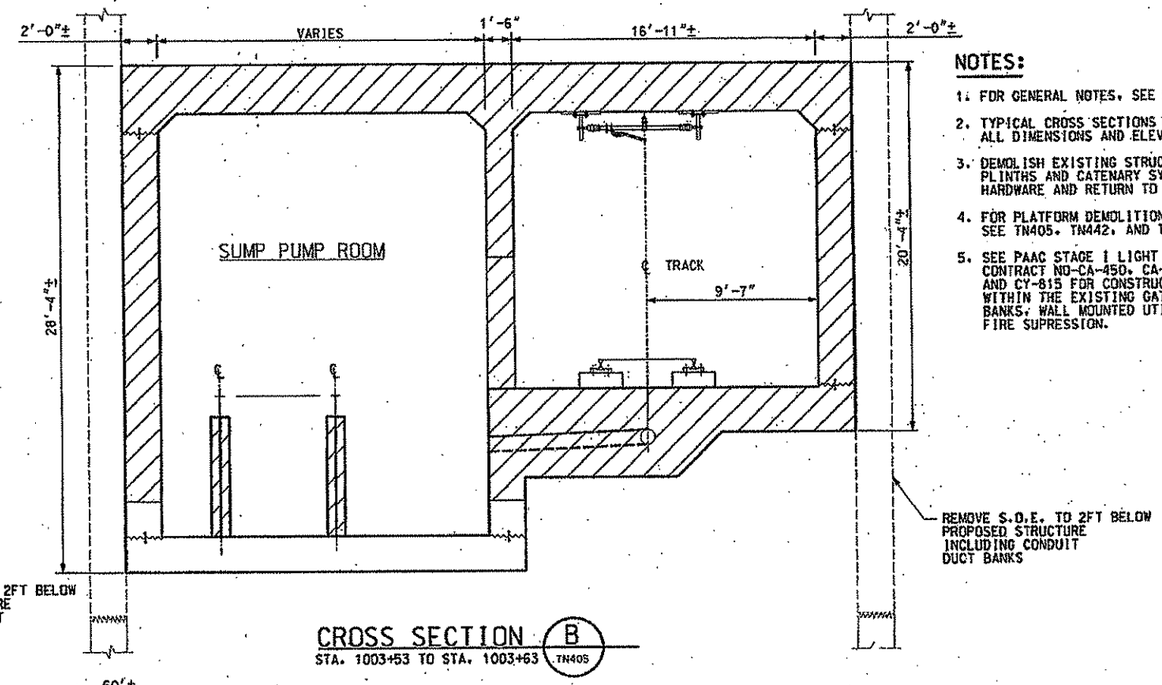

CROSS SECTION B
STA. 1003+53 TO STA. 1003+63 TN405

NOTES:

1. FOR GENERAL NOTES, SEE DRAWINGS TN100 AND TN101.
2. TYPICAL CROSS SECTIONS GIVEN FOR INFORMATION ONLY. ALL DIMENSIONS AND ELEVATIONS TO BE VERIFIED IN FIELD.
3. DEMOLISH EXISTING STRUCTURE REMOVING TRACK PLINTHS AND CATENARY SYSTEM. SALVAGE CATENARY HARDWARE AND RETURN TO PAAC.
4. FOR PLATFORM DEMOLITION LIMITS WITHIN THE EXISTING STRUCTURE SEE TN405, TN442, AND TN443.
5. SEE PAAC STAGE I LIGHT RAIL TRANSIT SYSTEM CONSTRUCTION CONTRACT NO-CA-450, CA-456-G, CA-456-H, CA-456-P, CA-456-E, AND CY-815 FOR CONSTRUCTION DETAILS AND OPERATING FACILITIES WITHIN THE EXISTING GATEWAY STATION LOOP INCLUDING DUCT BANKS, WALL MOUNTED UTILITIES, TRACK DRAINAGE AND FIRE SUPRESSION.

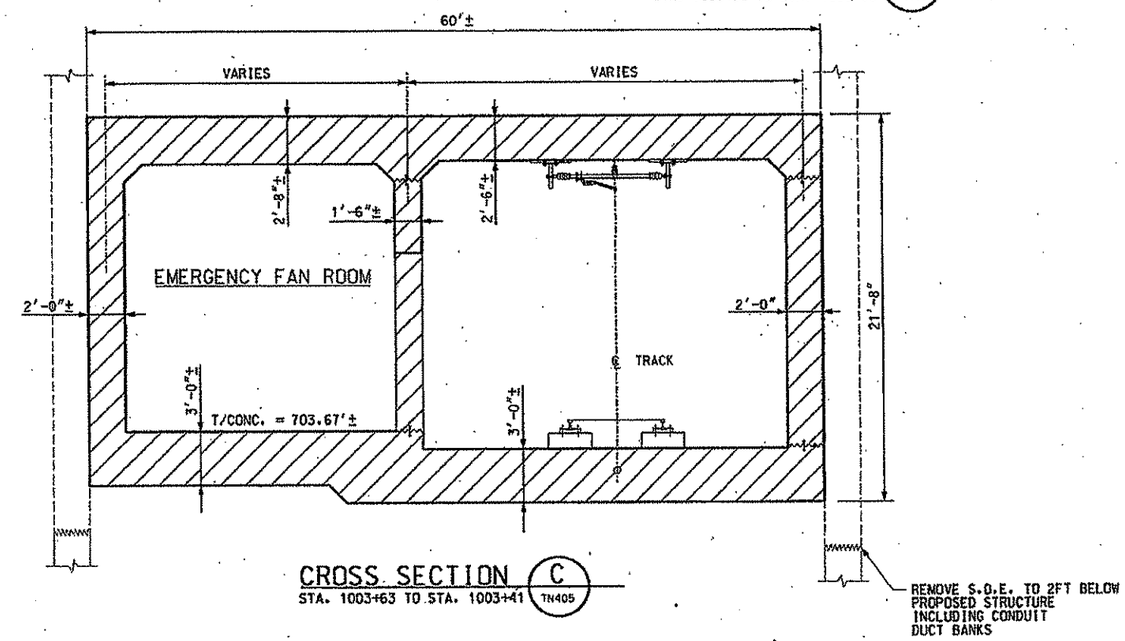

CROSS SECTION C
STA. 1003+63 TO STA. 1003+41 TN405

NO.	DATE	DESCRIPTION

REVISIONS

THE PREPARATION OF THIS DOCUMENT HAS BEEN FINANCED IN PART THROUGH A GRANT FROM THE FEDERAL TRANSIT ADMINISTRATION, U.S. DEPARTMENT OF TRANSPORTATION, UNDER THE URBAN MASS TRANSPORTATION ACT OF 1964, AS AMENDED, FOR THE PORT AUTHORITY OF ALLEGHENY COUNTY, PENNSYLVANIA.

COMMONWEALTH OF PENNSYLVANIA REGISTERED PROFESSIONAL PETER DENNIS MARTIZ ENGINEER NO. 044202

SIGNATURE

DMJM HARRIS | AECOM
FOUR GATEWAY CENTER
20TH FLOOR
PITTSBURGH, PA. 15222

APPROVED — DATE 2/1/08

DESIGNED	RJS
DRAWN	NPD
CHECKED	CCB
IN CHARGE	DPH
DATE	FEB 1, 2008
SCALE	1/4"=1'-0"

4' 2' 0 4'

PORT AUTHORITY OF ALLEGHENY COUNTY
PITTSBURGH PENNSYLVANIA

NORTH SHORE CONNECTOR
GATEWAY STATION SHELL
EXISTING GATEWAY STATION
DEMOLITION CROSS SECTIONS

Port Authority

CONTRACT NO. NSC-004 R.
DWG. NO. TN406 SHT. 75

$DATE$ $TIME$
$FILE$

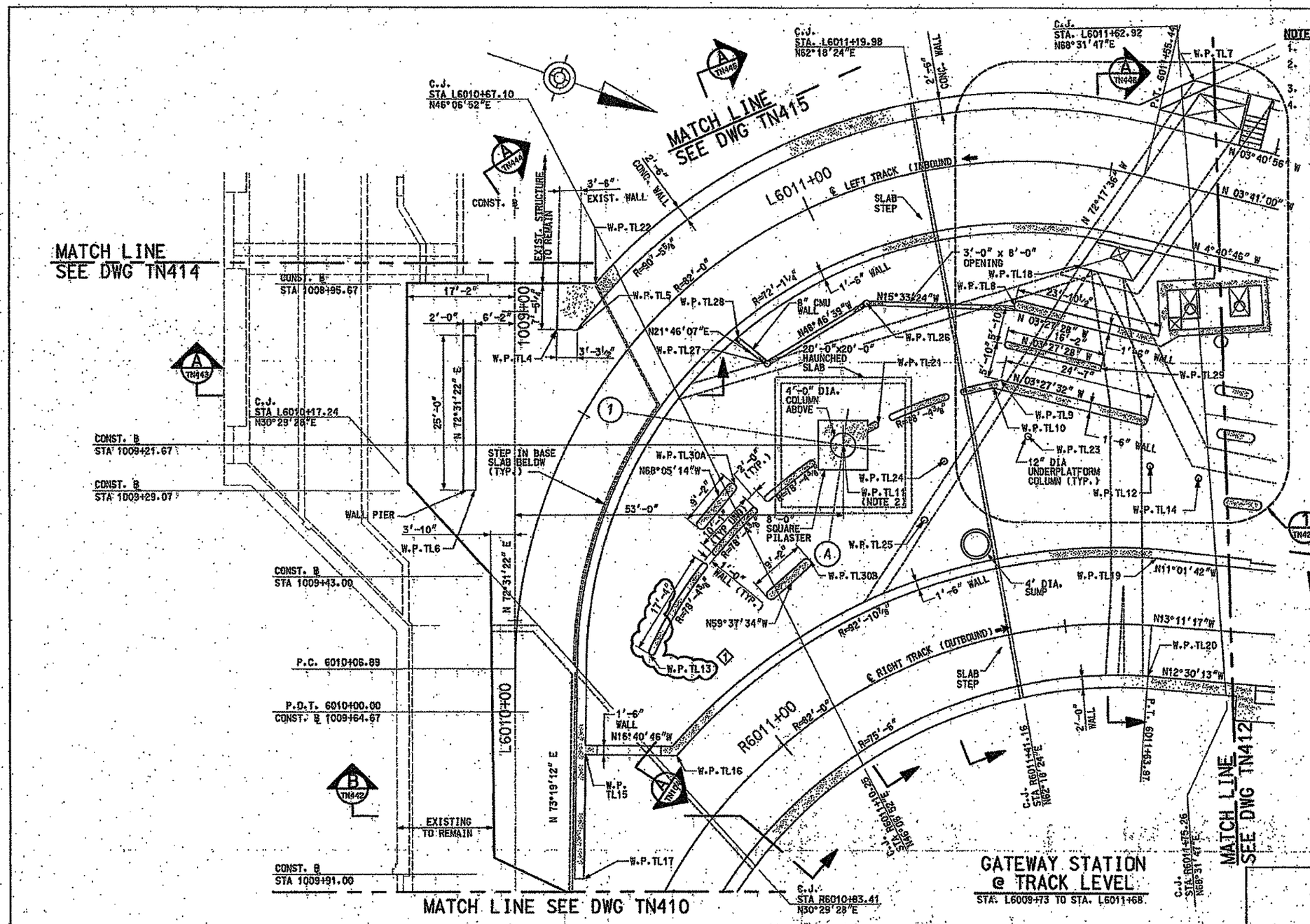

GATEWAY STATION @ TRACK LEVEL

STA. L6009+73 TO STA. L6011+68.

NOTES:

1. FOR GENERAL NOTES, SEE DRAWINGS TN100 AND TN101.
2. WORK POINTS AT CIRCULAR COLUMNS ARE LOCATED AT CENTER OF COLUMN.
3. FOR MORE INFORMATION SEE PART PLAN ON TN426.
4. CONSTRUCTION BASELINE IS A TANGENT SEGMENT OF THE 1981 TRACK CENTERLINE. THE PROPOSED LEFT TRACK PC STA. 6010+00 AT THE START OF THE LEFT TRACK COINCIDES WITH THE 1981 STA. 1009+64.67 UPSTATION FOR THE CONSTRUCTION BASELINE 1981 INBOUND TRACK CENTERLINE IS TO THE EAST. SEE DRAWING TN411.

WORK POINT TABLE

W.P.	STATION	OFFSET
TL4	L6010+58.54	11'-1¾" LEFT
TL5	L6010+60.25	8'-5⅝" LEFT
TL6	L6010+32.83	10'-8⅞" LEFT
TL7	L6011+59.72	16'-10⅜" LEFT
TL8	L6011+33.57	23'-0¼" RIGHT
TL9	L6011+29.16	35'-1⅝" RIGHT
TL10	L6011+26.90	36'-3⅜" RIGHT
TL11	R6011+27.23	37'-1⅜" LEFT
TL12	R6011+62.34	25'-8⅝" LEFT
TL13	R6010+94.71	25'-2¾" LEFT
TL14	R6011+69.87	24'-4⅜" LEFT
TL15	R6010+79.92	22'-9⅛" LEFT
TL16	R6010+87.44	10'-10¾" LEFT
TL17	R6010+65.50	12'-8⅝" LEFT
TL18	L6011+47.31	15'-11¼" RIGHT
TL19	R6011+63.97	10'-10¾" LEFT
TL20	R6011+63.97	8'-2" RIGHT
TL21	R6011+31.73	38'-5¼" LEFT
TL22	L6010+67.17	10'-11⅝" LEFT
TL23	R6011+47.79	31'-2½" LEFT
TL24	R6011+37.63	29'-8" LEFT
TL25	R6011+33.42	21'-4¼" LEFT
TL26	L6011+02.82	17'-8¾" RIGHT
TL27	L6010+78.71	17'-8⅛" RIGHT
TL28	L6010+77.69	11'-4¾" RIGHT
TL29	L6011+56.04	31'-9" RIGHT
TL30A	L6010+53.62	26'-9" RIGHT
TL30B	R6011+17.92	22'-4¾" LEFT

NO.	DATE	DESCRIPTION
1	3/21/08	ADDENDUM 5 – DRAWING MODIFIED

REVISIONS

THE PREPARATION OF THIS DOCUMENT HAS BEEN FINANCED IN PART THROUGH A GRANT FROM THE FEDERAL TRANSIT ADMINISTRATION, U.S. DEPARTMENT OF TRANSPORTATION, UNDER THE URBAN MASS TRANSPORTATION ACT OF 1964, AS AMENDED, FOR THE PORT AUTHORITY OF ALLEGHENY COUNTY, PENNSYLVANIA.

REGISTERED PROFESSIONAL ENGINEER PETER DENIS MAURITZ COMMONWEALTH OF PENNSYLVANIA

SIGNATURE

DMJM HARRIS | AECOM
FOUR GATEWAY CENTER
20TH FLOOR
PITTSBURGH, PA. 15222

APPROVED — DATE 3/21/08

DESIGNED	RJS
DRAWN	NPD
CHECKED	CCB
IN CHARGE	DPH
DATE	FEB 1, 2008
SCALE	1/8"=1'-0"

PORT AUTHORITY OF ALLEGHENY COUNTY
PITTSBURGH PENNSYLVANIA

NORTH SHORE CONNECTOR
GATEWAY STATION SHELL
GATEWAY STATION PLAN @ TRACK LEVEL
SHEET 2 OF 7

Port Authority

CONTRACT NO. NSC-004R
DWG. NO. TN411 SHT. 77

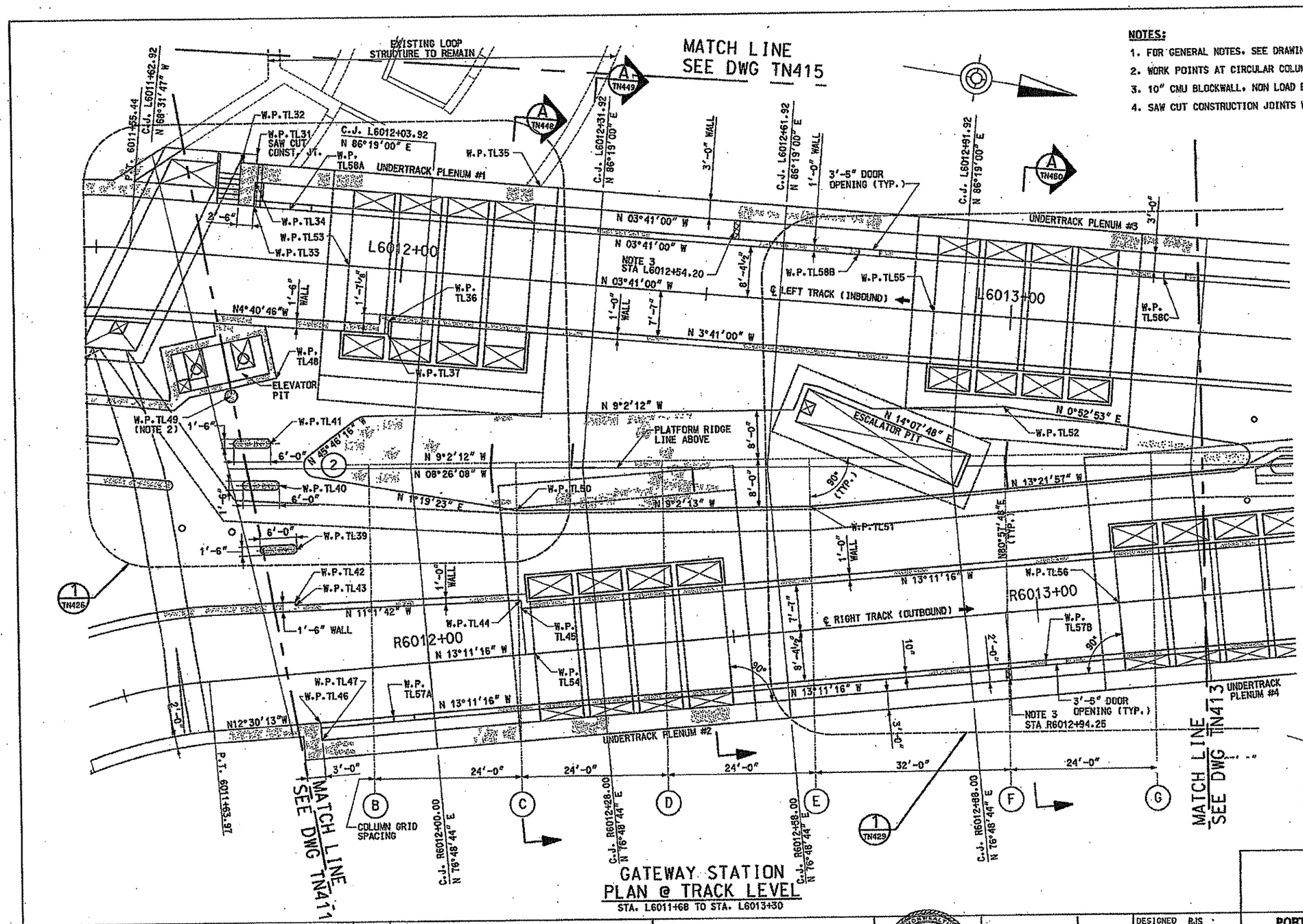

GATEWAY STATION PLAN @ TRACK LEVEL

STA. L6011+68 TO STA. L6013+30

NOTES:

1. FOR GENERAL NOTES, SEE DRAWINGS TN100 AND TN101.
2. WORK POINTS AT CIRCULAR COLUMNS ARE LOCATED AT THE CENTER OF COLUMN.
3. 10" CMU BLOCKWALL, NON LOAD BEARING.
4. SAW CUT CONSTRUCTION JOINTS WHICH BECOME INTEGRAL WITH THE EXISTING LOOP.

WORK POINT TABLE

W.P.	STATION	OFFSET
TL31	L6011+75.03	16'-10 3/8" LEFT
TL32	L6011+72.53	15'-4 1/2" LEFT
TL33	L6011+75.03	8'-5 5/8" LEFT
TL34	L6011+75.03	12'-4 1/2" LEFT
TL35	L6012+21.61	15'-4 1/2" LEFT
TL36	L6011+98.50	8'-7" RIGHT
TL37	L6011+98.50	10'-7 7/8" RIGHT
TL39	R6011+80.17	20'-7 3/4" LEFT
TL40	R6011+78.29	31'-4 5/8" LEFT
TL41	R6011+77.48	38'-5 1/4" LEFT
TL42	R6011+79.09	11'-10" LEFT
TL43	R6011+79.14	11'-4" LEFT
TL44	R6012+15.80	8'-11 3/8" LEFT
TL45	R6012+15.80	7'-7" LEFT
TL46	R6011+81.41	8'-4 1/2" RIGHT
TL47	R6011+81.41	11'-2 1/2" RIGHT
TL48	L6011+80.90	19'-4 3/8" RIGHT
TL49	L6011+73.75	22'-10 3/8" RIGHT
TL50	R6012+16.52	23'-10 1/2" LEFT
TL51	R6012+64.40	20'-4 7/8" LEFT
TL52	L6012+99.78	14'-7 3/4" RIGHT
TL53	L6011+91.29	0'-0"
TL54	R6012+17.30	0'-0"
TL55	L6012+87.37	0'-0"
TL56	R6013+13.48	0'-0"
TL57A	R6011+93.41	8'-4 1/2" RIGHT
TL57B	R6013+00.56	8'-4 1/2" RIGHT
TL58A	L6011+81.03	8'-4 1/2" LEFT
TL58B	L6012+74.45	8'-4 1/2" LEFT
TL58C	L6013+24.53	8'-4 1/2" LEFT

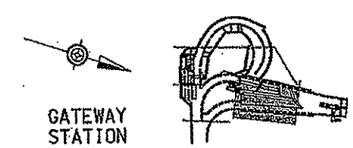

LOCUS
NO SCALE

NO.	DATE	DESCRIPTION

REVISIONS

THE PREPARATION OF THIS DOCUMENT HAS BEEN FINANCED IN PART THROUGH A GRANT FROM THE FEDERAL TRANSIT ADMINISTRATION, U.S. DEPARTMENT OF TRANSPORTATION, UNDER THE URBAN MASS TRANSPORTATION ACT OF 1964, AS AMENDED, FOR THE PORT AUTHORITY OF ALLEGHENY COUNTY, PENNSYLVANIA.

COMMONWEALTH OF PENNSYLVANIA REGISTERED PROFESSIONAL ENGINEER PETER DENNIS MAURITZ

SIGNATURE

DMJM HARRIS | AECOM
FOUR GATEWAY CENTER
20TH FLOOR
PITTSBURGH, PA. 15222

APPROVED — DATE 2/1/08

DESIGNED	RJS
DRAWN	NPD
CHECKED	CCB
IN CHARGE	DPH
DATE	FEB 1, 2008
SCALE	1/8"=1'-0"

PORT AUTHORITY OF ALLEGHENY COUNTY
PITTSBURGH PENNSYLVANIA

NORTH SHORE CONNECTOR
GATEWAY STATION SHELL
GATEWAY STATION PLAN @ TRACK LEVEL
SHEET 3 OF 7

Port Authority

CONTRACT NO. NSC-004R
DWG. NO. TN412 SHT. 78

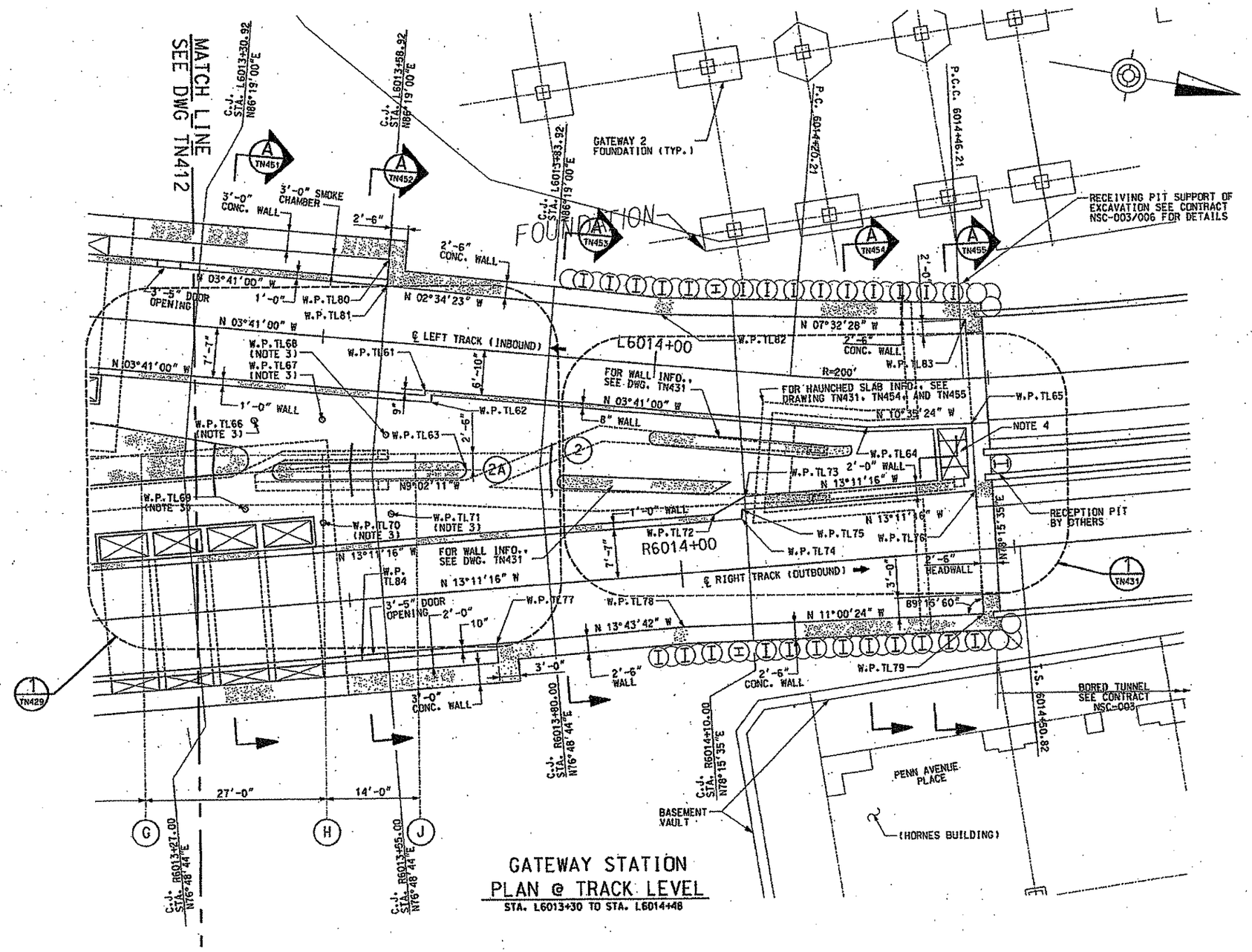

GATEWAY STATION
PLAN @ TRACK LEVEL
STA. L6013+30 TO STA. L6014+48

NOTES:

1. FOR GENERAL NOTES, SEE DRAWINGS TN100 AND TN101.
2. ALL WALL JOG. ARE 90° TO WALL UNLESS OTHERWISE NOTED.
3. WORK POINTS AT CIRCULAR COLUMNS ARE LOCATED AT THE CENTER OF 10" COLUMN.
4. GRATING SHALL BE OHIO GRATINGS MODEL NUMBER XXX OR EQUIVALENT.

WORK POINT TABLE

W.P.	STATION	OFFSET
TL61	L6013+66.00	6'-10" RIGHT
TL62	L6013+67.00	8'-7" RIGHT
TL63	L6013+72.98	18'-4" RIGHT
TL64	L6014+31.85	7'-2 1/4" RIGHT
TL65	L6014+47.13	6'-9 5/8" RIGHT
TL66	L6013+40.83	13'-6 1/2" RIGHT
TL67	L6013+50.85	12'-6 3/8" RIGHT
TL68	L6013+60.58	14'-0 5/8" RIGHT
TL69	R6013+35.72	15'-1" LEFT
TL70	R6013+47.03	12'-1 1/8" LEFT
TL71	R6013+57.32	12'-7 3/8" LEFT
TL72	R6014+05.60	8'-7" LEFT
TL73	R6014+10.38	10'-11 5/8" LEFT
TL74	R6014+09.52	7'-7" LEFT
TL75	R6014+09.73	8'-11 5/8" LEFT
TL76	R6014+44.95	8'-11 7/8" LEFT
TL77	R6013+71.41	8'-4 1/2" RIGHT
TL78	R6013+99.63	8'-1 1/4" RIGHT
TL79	R6014+44.48	9'-9 3/4" RIGHT
TL80	L6013+59.03	12'-4 1/2" LEFT
TL81	L6013+59.03	8'-4 1/2" LEFT
TL82	L6014+00.30	7'-6 7/8" LEFT
TL83	L6014+46.99	8'-11 1/8" LEFT
TL84	R6013+51.15	8'-4 1/2" RIGHT

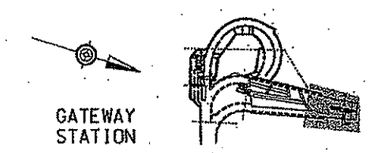

LOCUS
NO SCALE

NO.	DATE	DESCRIPTION

REVISIONS

THE PREPARATION OF THIS DOCUMENT HAS BEEN FINANCED IN PART THROUGH A GRANT FROM THE FEDERAL TRANSIT ADMINISTRATION, U.S. DEPARTMENT OF TRANSPORTATION, UNDER THE URBAN MASS TRANSPORTATION ACT OF 1964, AS AMENDED. FOR THE PORT AUTHORITY OF ALLEGHENY COUNTY, PENNSYLVANIA.

SIGNATURE

DMJM HARRIS | AECOM
FOUR GATEWAY CENTER
20TH FLOOR
PITTSBURGH, PA. 15222

APPROVED — DATE 2/1/08

DESIGNED	RJS
DRAWN	NPD
CHECKED	CCB
IN CHARGE	DPH
DATE	FEB 1, 2008
SCALE	1/8"=1'-0"

PORT AUTHORITY OF ALLEGHENY COUNTY
PITTSBURGH PENNSYLVANIA

NORTH SHORE CONNECTOR
GATEWAY STATION SHELL
GATEWAY STATION PLAN @ TRACK LEVEL
SHEET 4 OF 7

Port Authority

CONTRACT NO. NSC-004R
DWG. NO. TN413 SHT. 78

NOTES:

1. FOR GENERAL NOTES, SEE DRAWINGS TN100 AND TN101.
2. VERIFY IN FIELD LOCATIONS OF ALL EXISTING WALLS AND ADJUST PROPOSED WALL LENGTH ACCORDINGLY.
3. FOR BLOCKWALL DETAILS, REFERENCE TN780.

LEGEND:

BLOCKWALL

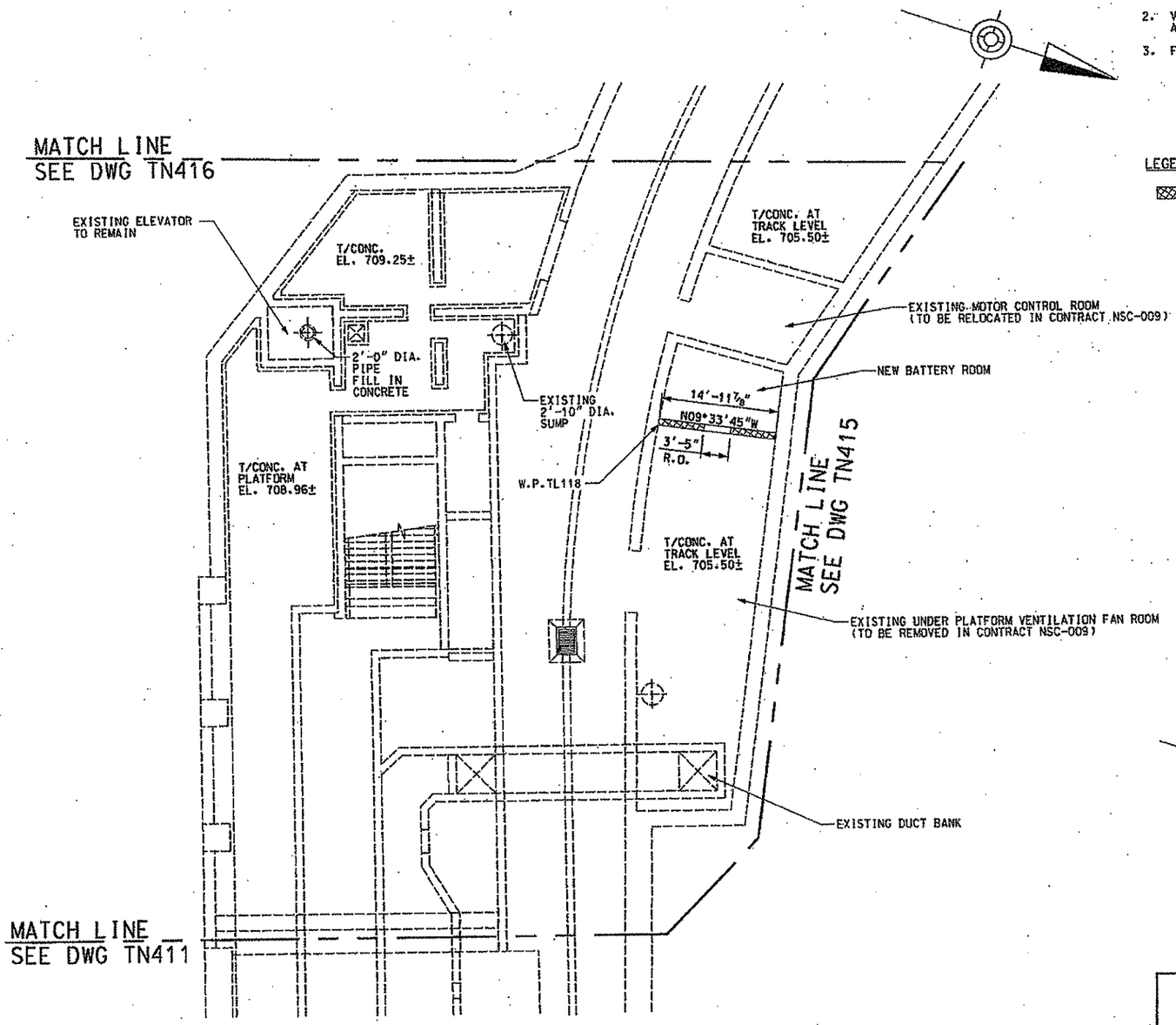

WORK POINT TABLE

W.P.	STATION	OFFSET
TL118	L6010+95.91	66'-11 1/8" LEFT

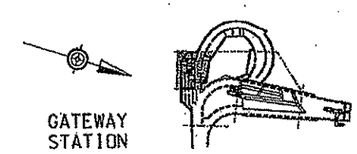

LOCUS
NO SCALE

NO.	DATE	DESCRIPTION

REVISIONS

THE PREPARATION OF THIS DOCUMENT HAS BEEN FINANCED IN PART THROUGH A GRANT FROM THE FEDERAL TRANSIT ADMINISTRATION, U.S. DEPARTMENT OF TRANSPORTATION, UNDER THE URBAN MASS TRANSPORTATION ACT OF 1964, AS AMENDED, FOR THE PORT AUTHORITY OF ALLEGHENY COUNTY, PENNSYLVANIA.

COMMONWEALTH OF PENNSYLVANIA REGISTERED PROFESSIONAL PETER DENNIS MARDITZ ENGINEER

SIGNATURE

DMJM HARRIS | AECOM
FOUR GATEWAY CENTER
20TH FLOOR
PITTSBURGH, PA. 15222

APPROVED DATE 2/1/08

DESIGNED	RJS
DRAWN	NPD
CHECKED	CCB
IN CHARGE	DPH
DATE	FEB 1, 2008
SCALE	1/8"=1'-0" (8' 4' 0 8')

PORT AUTHORITY OF ALLEGHENY COUNTY
PITTSBURGH PENNSYLVANIA

NORTH SHORE CONNECTOR
GATEWAY STATION SHELL
GATEWAY STATION PLAN @ TRACK LEVEL
SHEET 5 OF 7

Port Authority

CONTRACT NO. NSC-004R
DWG. NO. TN414 SHT. 80

$DATE$ $TIME$
$FILE$

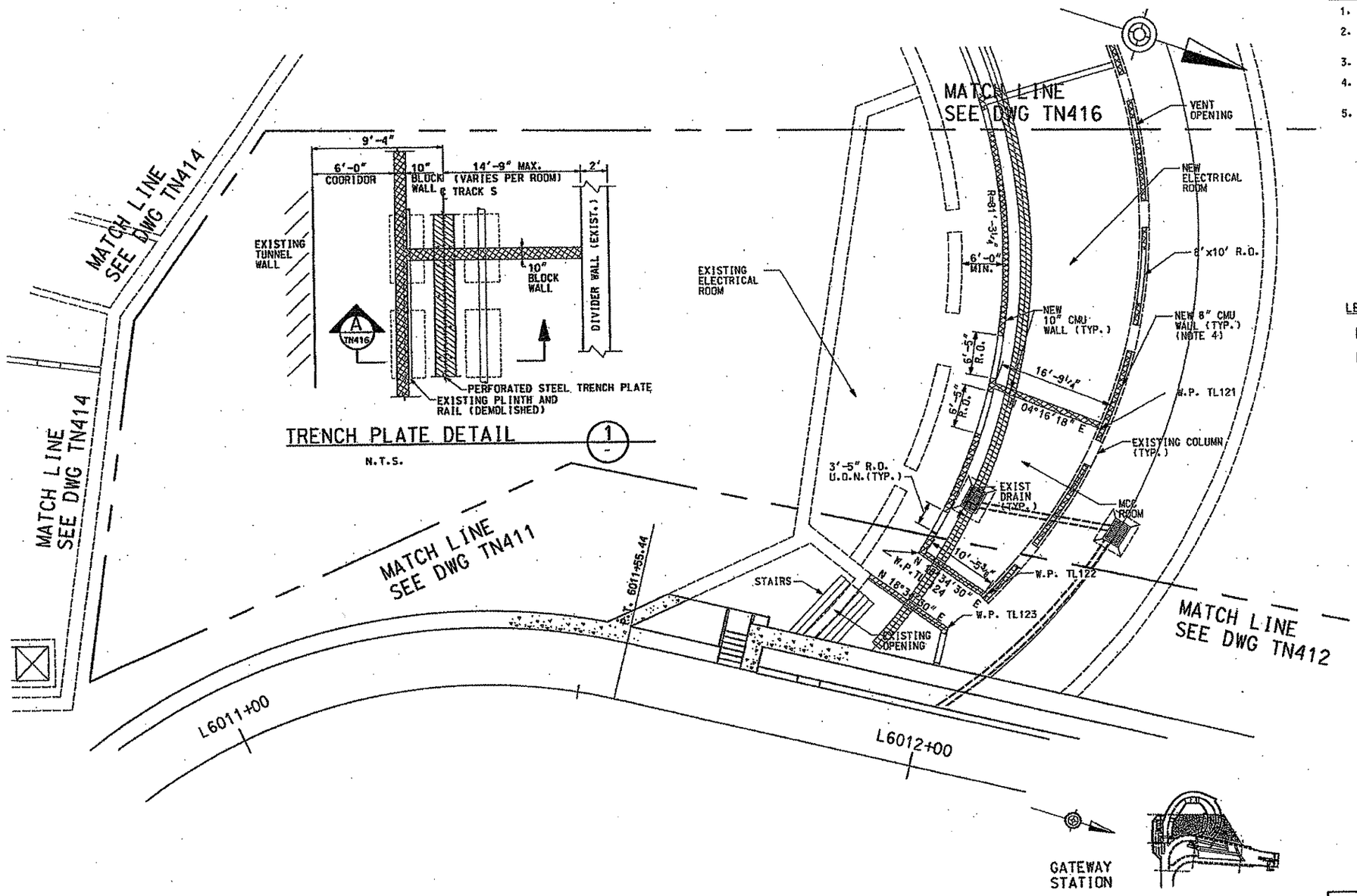

NOTES:

1. FOR GENERAL NOTES, SEE DRAWINGS TN100 AND TN101.
2. VERIFY IN FIELD LOCATIONS OF ALL EXISTING WALLS AND ADJUST PROPOSED WALL LENGTH ACCORDINGLY.
3. FOR BLOCKWALL DETAILS, REFERENCE TN780.
4. 8" CMU WALL TO BE PLACED ALONG CENTERLINE OF EXISTING PILASTERS. VERIFY IN FIELD PILASTER LOCATIONS.
5. CONTINUOUS TRENCH PLATE, ASTM 36 GALVANIZED ¼" THICK BY 1'-6" WIDE PLACED ON 4'-0" LONG SECTIONS HAVING A CENTERLINE RADIUS OF 82'-0". PERFORATIONS TO BE ROUNDED, ¼" WIDE, 12" LONG, SPACED 1" ON CENTER. USE (6)-5/8" DIAMETER HILTI HDI ANCHORS OR EQUAL WITH A 1½" EDGE DISTANCE.

LEGEND:

BLOCKWALL

PERFORATED TRENCH PLATE

WORK POINT TABLE

W.P.	STATION	OFFSET
TL121	L6012+16.39	54'-9⅝" LEFT
TL122	L6012+05.57	27'-4⅝" LEFT
TL123	L6012+01.04	21'-2" LEFT
TL124	L6011+94.46	31'-0⅜" LEFT

GATEWAY
STATION

LOCUS
NO SCALE

NO.	DATE	DESCRIPTION

REVISIONS

THE PREPARATION OF THIS DOCUMENT HAS BEEN FINANCED IN PART THROUGH A GRANT FROM THE FEDERAL TRANSIT ADMINISTRATION, U.S. DEPARTMENT OF TRANSPORTATION, UNDER THE URBAN MASS TRANSPORTATION ACT OF 1964, AS AMENDED, FOR THE PORT AUTHORITY OF ALLEGHENY COUNTY, PENNSYLVANIA.

COMMONWEALTH OF PENNSYLVANIA REGISTERED PROFESSIONAL ENGINEER PETER DENNIS MARRITZ

SIGNATURE

DMJM HARRIS | AECOM
FOUR GATEWAY CENTER
20TH FLOOR
PITTSBURGH, PA. 15222

APPROVED — DATE 2/1/08

DESIGNED	RJS
DRAWN	NPD
CHECKED	CCB
IN CHARGE	DPH
DATE	FEB 1, 2008
SCALE	1/8"=1'-0"

8' 4' 0 8'

PORT AUTHORITY OF ALLEGHENY COUNTY
PITTSBURGH PENNSYLVANIA

NORTH SHORE CONNECTOR
GATEWAY STATION SHELL
GATEWAY STATION PLAN @ TRACK LEVEL
SHEET 8 OF 7

Port Authority

CONTRACT NO. NSC-004R

DWG.NO. TN415 SHT. 81

$DATE$ $TIME$
$FILE$

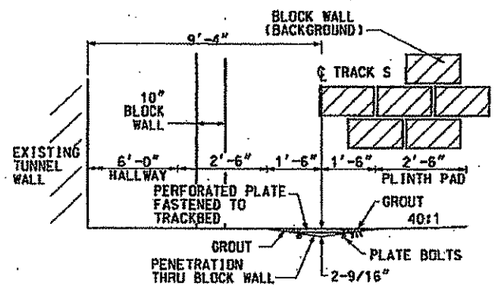

SECTION A TN415

N.T.S.

NOTE: PLATE AND GROUT TO LEVEL ANCILARY ROOM FLOOR

NOTES:

1. FOR GENERAL NOTES, SEE DRAWINGS TN100 AND TN101.
2. VERIFY IN FIELD LOCATIONS OF ALL EXISTING WALLS AND ADJUST PROPOSED WALL LENGTH ACCORDINGLY.
3. FOR BLOCKWALL DETAILS, REFERENCE TN780.

LEGEND:

BLOCKWALL

CONTINUOUS TRENCH PLATE

WORK POINT TABLE

W.P.	STATION	OFFSET
TL131	L6012+06.29	107'-10 1/8" LEFT
TL132	L6011+78.68	135'-1 3/4" LEFT
TL133	L6011+54.54	144'-0 1/2" LEFT
TL134	L6011+96.40	121'-5 1/8" LEFT
TL135	L6011+29.35	110'-3 1/8" LEFT
TL136	L6011+54.07	131'-11 1/8" LEFT

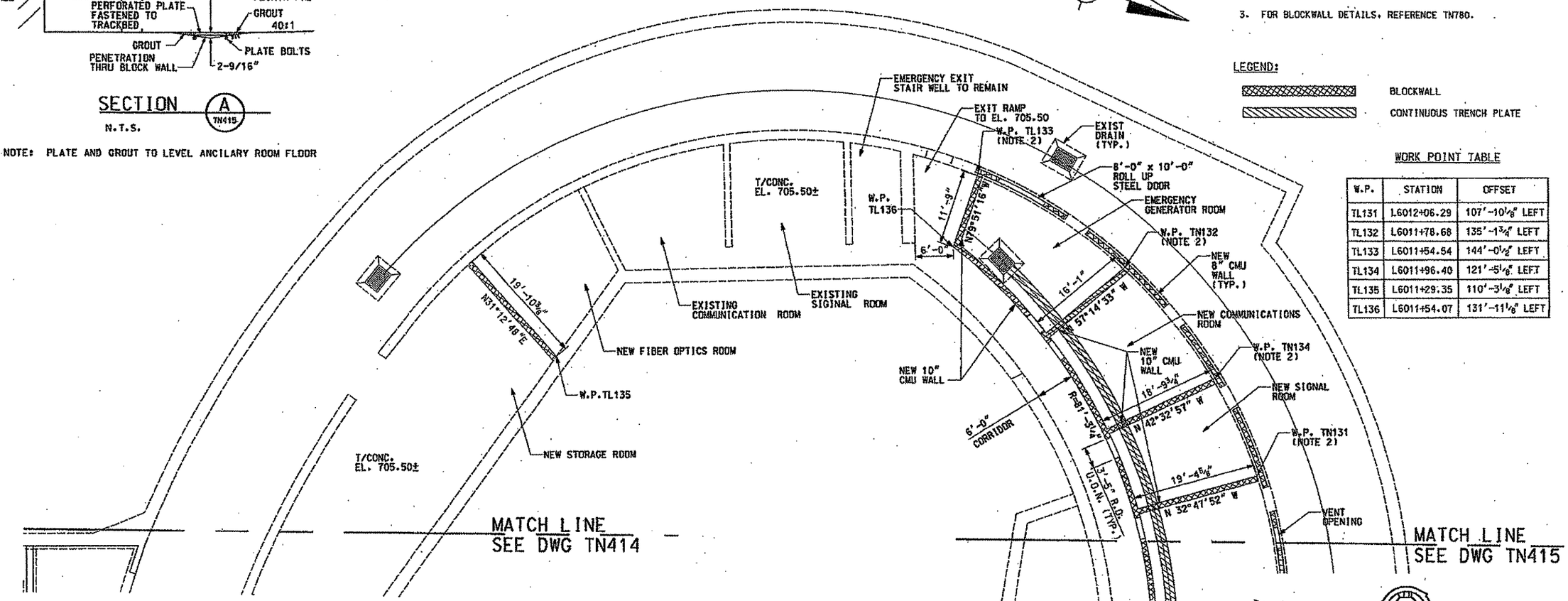

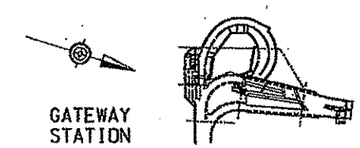

LOCUS
NO SCALE

NO.	DATE	DESCRIPTION

REVISIONS

THE PREPARATION OF THIS DOCUMENT HAS BEEN FINANCED IN PART THROUGH A GRANT FROM THE FEDERAL TRANSIT ADMINISTRATION, U.S. DEPARTMENT OF TRANSPORTATION, UNDER THE URBAN MASS TRANSPORTATION ACT OF 1964, AS AMENDED. FOR THE PORT AUTHORITY OF ALLEGHENY COUNTY, PENNSYLVANIA.

COMMONWEALTH OF PENNSYLVANIA REGISTERED PROFESSIONAL PETER DENNIS MARRITZ ENGINEER

SIGNATURE

DMJM HARRIS | AECOM

FOUR GATEWAY CENTER
20TH FLOOR
PITTSBURGH, PA. 15222

APPROVED — DATE 2/1/08

DESIGNED	RJS
DRAWN	NPD
CHECKED	CCB
IN CHARGE	DPH
DATE	FEB 1, 2008
SCALE	1/8"=1'-0"

8' 4' 0 8'

PORT AUTHORITY OF ALLEGHENY COUNTY
PITTSBURGH PENNSYLVANIA

NORTH SHORE CONNECTOR
GATEWAY STATION SHELL
GATEWAY STATION PLAN @ TRACK LEVEL
SHEET 7 OF 7

Port Authority

CONTRACT NO. NSC-004R

DWG.NO. TN416 SHT. 82

$DATE$ $TIME$
$FILE$

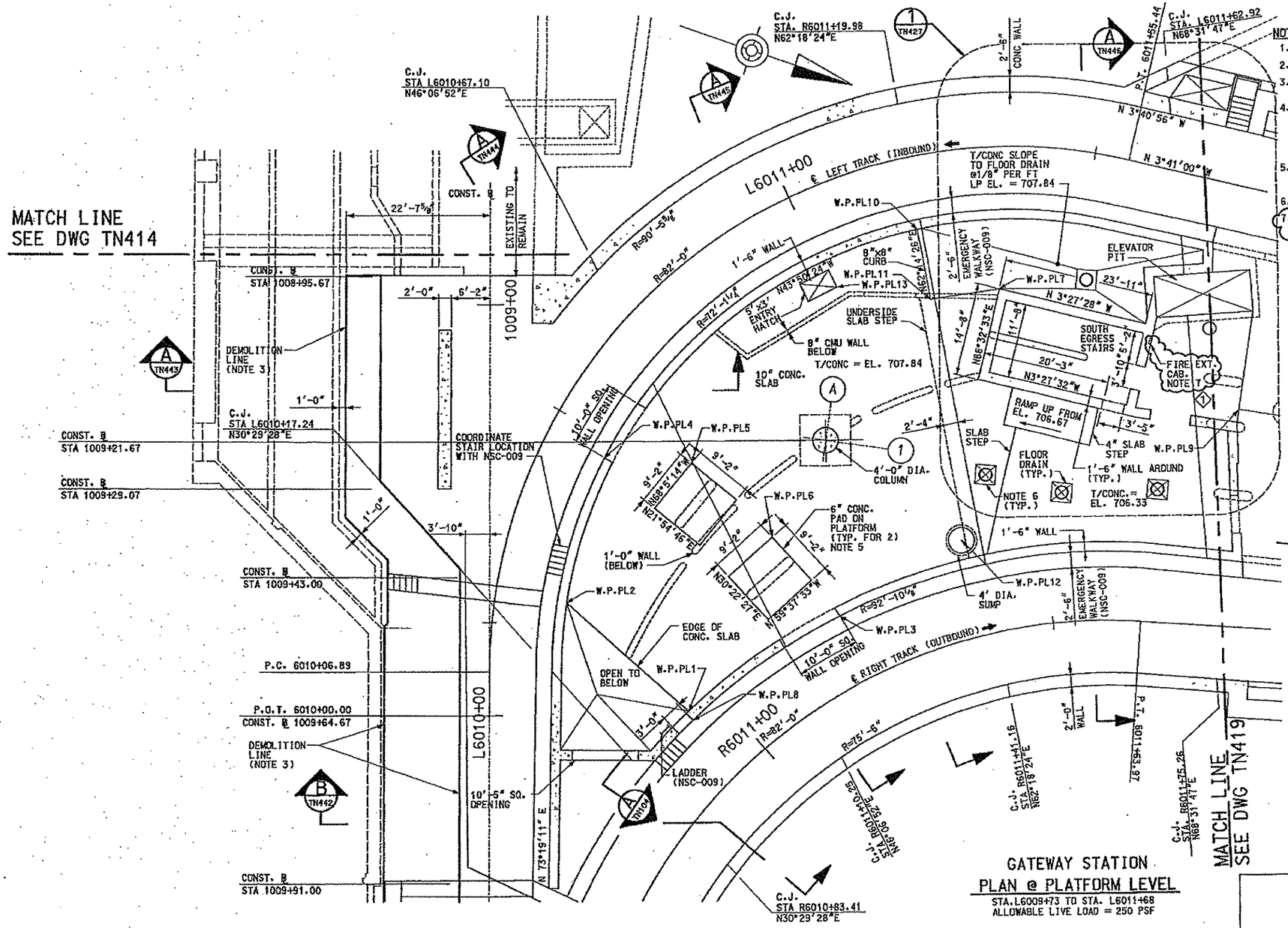

NOTES:

1. FOR GENERAL NOTES, SEE DRAWINGS TN100 AND TN101.
2. FOR ADDITIONAL INFORMATION SEE DRAWING TN427.
3. REMOVE PLATFORM AND UNDERWALLS TO STATION L6009+60 WITHIN LIMITS SHOWN.
4. CONSTRUCTION BASELINE IS A TANGENT SEGMENT OF THE 1981 TRACK CENTERLINE. THE PROPOSED LEFT TRACK PC STA. 6010+00 AT THE START OF THE LEFT TRACK COINCIDES WITH THE 1981 STA. 1009+64.67 UPSTATION FOR THE CONSTRUCTION BASELINE 1981 INBOUND TRACK CENTERLINE IS TO THE EAST. SEE DRAWING TN411.
5. ORIENTATION OF FAN PAD IS TO BE COORDINATED WITH NSC-009. ALSO ATTENUATOR PADS MAY BE REQUIRED. COORDINATE WITH NSC-009.
6. FOR FLOOR DRAIN INFORMATION SEE PL800.
7. FIRE EXSTINGUISER CABINET SHALL BE 10½ INCHES WIDE 25¼ INCHES HIGH, 4 INCHES DEEP AND ITS BASE SHALL BE 34 INCHES ABOVE FINISHED FLOOR. 2

WORK POINT TABLE

W.P.	STATION	OFFSET
PL1	R6010+95.51	12'-4¾" LEFT
PL2	L6010+19.50	11'-4¾" RIGHT
PL3	R6011+20.01	10'-10¾" LEFT
PL4	L6010+46.66	9'-10¾" RIGHT
PL5	L6010+54.36	22'-2⅜" RIGHT
PL6	R6011+17.07	26'-10⅛" LEFT
PL7	L6011+33.85	22'-3½" RIGHT
PL8	R6010+95.04	10'-10¾" LEFT
PL9	R6011+77.20	34'-3⅛" LEFT
PL10	L6011+19.03	11'-4¾" RIGHT
PL11	L6011+18.66	22'-7" RIGHT
PL12	R6011+39.01	15'-5¼" LEFT
PL13	R6011+01.07	15'-11¼" LEFT

GATEWAY STATION
PLAN @ PLATFORM LEVEL
STA. L6009+73 TO STA. L6011+68
ALLOWABLE LIVE LOAD = 250 PSF

NO.	DATE	DESCRIPTION
1	3/14/08	ADDENDUM 3 - DRAWING MODIFIED

REVISIONS

THE PREPARATION OF THIS DOCUMENT HAS BEEN FINANCED IN PART THROUGH A GRANT FROM THE FEDERAL TRANSIT ADMINISTRATION, U.S. DEPARTMENT OF TRANSPORTATION, UNDER THE URBAN MASS TRANSPORTATION ACT OF 1964, AS AMENDED, FOR THE PORT AUTHORITY OF ALLEGHENY COUNTY, PENNSYLVANIA.

REGISTERED PROFESSIONAL ENGINEER PETER DENNIS MAURITZ PENNSYLVANIA
SIGNATURE

DMJM HARRIS | AECOM
FOUR GATEWAY CENTER
20TH FLOOR
PITTSBURGH, PA. 15222
APPROVED
3/14/08
DATE

DESIGNED	RJS
DRAWN	NPD
CHECKED	CCB
IN CHARGE	DPH
DATE	FEB 1, 2008
SCALE	1/8"=1'-0"

8' 4' 0 8'

PORT AUTHORITY OF ALLEGHENY COUNTY
PITTSBURGH PENNSYLVANIA

NORTH SHORE CONNECTOR
GATEWAY STATION SHELL
GATEWAY STATION PLAN @ PLATFORM LEVEL
SHEET 1 OF 3

Port Authority

CONTRACT NO. NSC-004R
DWG.NO. TN418 SHT. 83

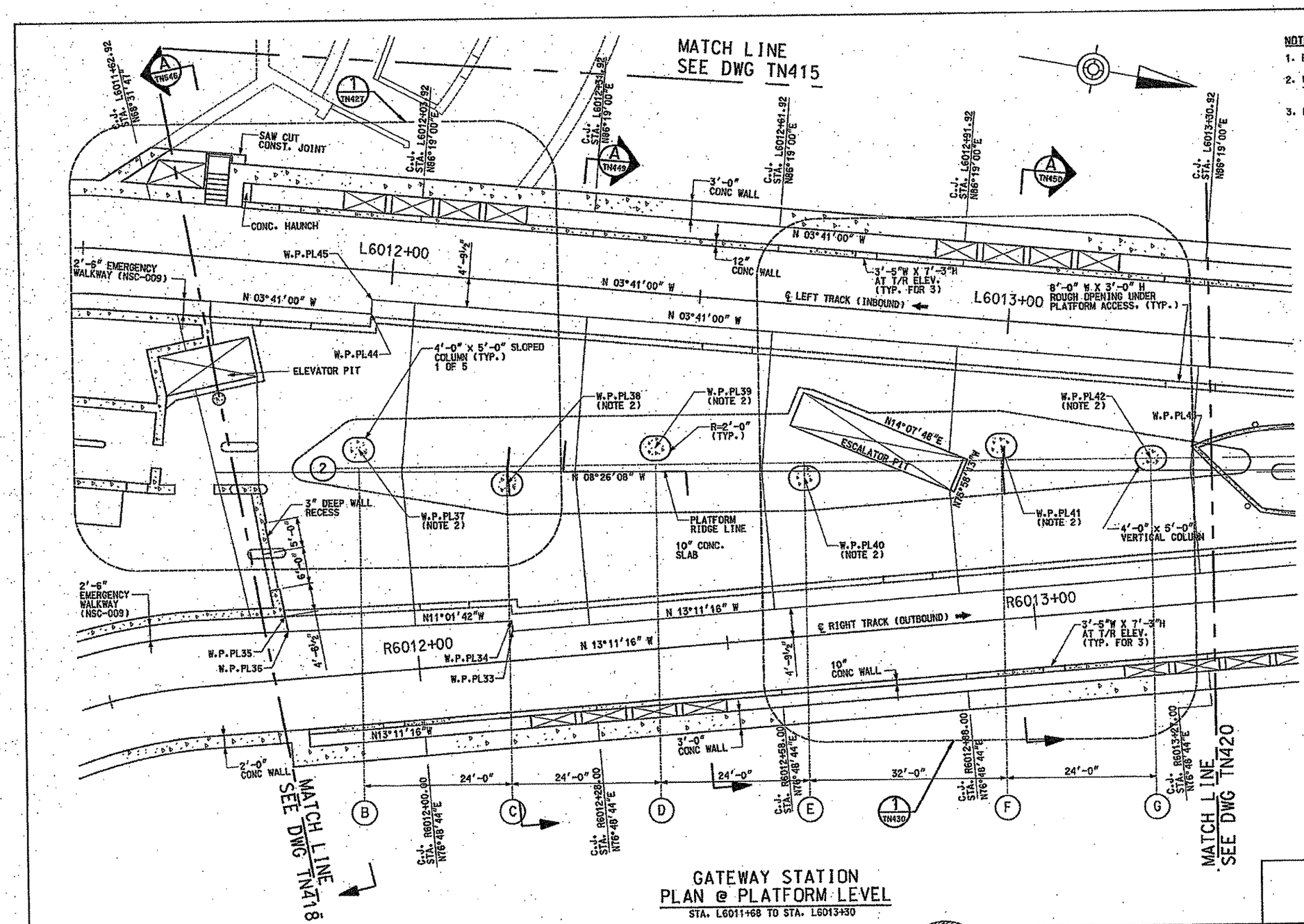

GATEWAY STATION PLAN @ PLATFORM LEVEL

STA. L6011+68 TO STA. L6013+30

NOTES:

1. FOR GENERAL NOTES, SEE DRAWINGS TN100 AND TN101.
2. WORK POINTS AT ALL COLUMNS ARE LOCATED AT THE CENTER OF COLUMN.
3. FOR MORE INFORMATION SEE SHEET TN427 AND TN430.

WORK POINT TABLE

W.P.	STATION	OFFSET
PL33	R6012+15.67	4'-9 1/2" LEFT
PL34	R6012+15.67	6'-5 3/8" LEFT
PL35	R6011+79.24	10'-3 7/8" LEFT
PL36	R6011+79.49	7'-9 3/4" LEFT
PL37	L6011+96.69	29'-3 3/4" RIGHT
PL38	L6012+21.15	32'-11 3/8" RIGHT
PL39	L6012+44.52	25'-2 1/8" RIGHT
PL40	L6012+68.90	28'-1 5/8" RIGHT
PL41	L6013+00.33	20'-3 1/4" RIGHT
PL42	L6013+24.42	20'-4 3/8" RIGHT
PL43	L6013+30.73	17'-11 1/8" RIGHT
PL44	L6011+97.00	7'-1 1/2" RIGHT
PL45	L6011+97.00	4'-9 1/2" RIGHT

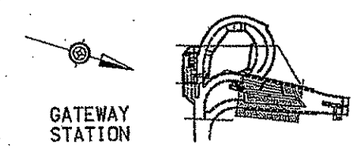

LOCUS
NO SCALE

NO.	DATE	DESCRIPTION

REVISIONS

THE PREPARATION OF THIS DOCUMENT HAS BEEN FINANCED IN PART THROUGH A GRANT FROM THE FEDERAL TRANSIT ADMINISTRATION, U.S. DEPARTMENT OF TRANSPORTATION, UNDER THE URBAN MASS TRANSPORTATION ACT OF 1964, AS AMENDED, FOR THE PORT AUTHORITY OF ALLEGHENY COUNTY, PENNSYLVANIA.

COMMONWEALTH OF PENNSYLVANIA REGISTERED PROFESSIONAL PETER DENNIS MARTUZ ENGINEER NO. 075883 E

SIGNATURE

DMJM HARRIS | AECOM
FOUR GATEWAY CENTER
20TH FLOOR
PITTSBURGH, PA. 15222

APPROVED 2/1/08 DATE

DESIGNED	RJS
DRAWN	NPD
CHECKED	CCB
IN CHARGE	DPH
DATE	FEB 1, 2008
SCALE	1/8"=1'-0"

8' 4' 0 8'

PORT AUTHORITY OF ALLEGHENY COUNTY
PITTSBURGH PENNSYLVANIA

NORTH SHORE CONNECTOR
GATEWAY STATION SHELL
GATEWAY STATION PLAN @ PLATFORM LEVEL
SHEET 2 OF 3

Port Authority

CONTRACT NO. NSC-004R
DWG. NO. TN419 SHT. 84

$DATE$ $TIME$
$FILE$

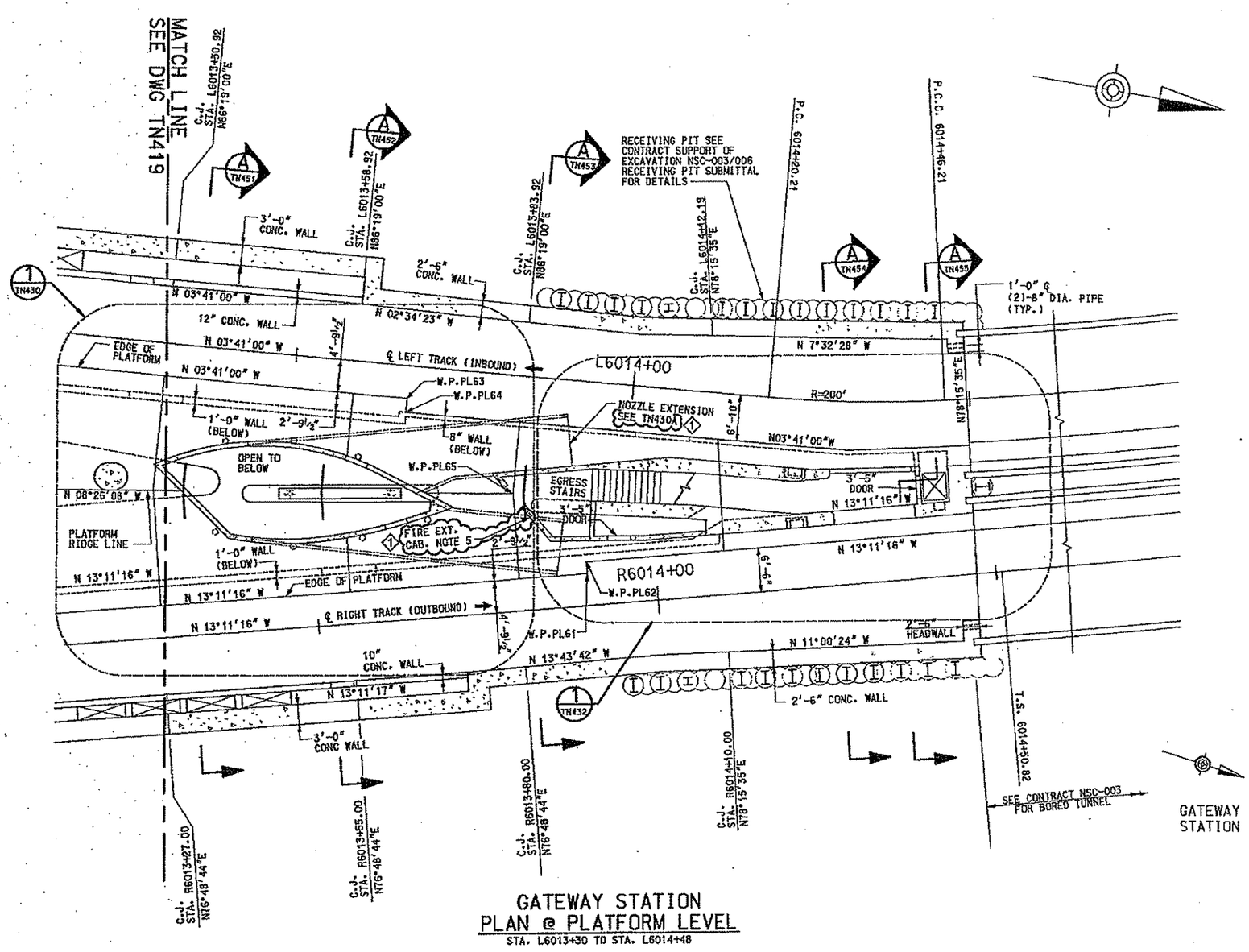

GATEWAY STATION
PLAN @ PLATFORM LEVEL

STA. L6013+30 TO STA. L6014+48

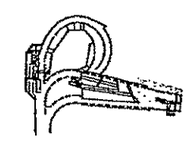

LOCUS
NO SCALE

NOTES:

1. FOR GENERAL NOTES, SEE DRAWINGS TN100 AND TN101.
2. ALL WALL JOGS, ARE 90° TO WALL UNLESS OTHERWISE NOTED.
3. WORK POINTS AT CIRCULAR COLUMNS ARE LOCATED AT THE CENTER OF COLUMN.
4. FOR MORE INFORMATION SEE DRAWINGS TN430 AND TN432.
5. FIRE EXSTINGUISER CABINET SHALL BE 10½ INCHES, WIDE 25¼ INCHES HIGH, 4 INCHES DEEP AND ITS BASE SHALL BE 34 INCHES ABOVE FINISHED FLOOR. (1)

WORK POINT TABLE

W.P.	STATION	OFFSET
PL61	R6013+89.84	4'-9½" LEFT
PL62	R6013+89.84	6'- 6" LEFT
PL63	L6013+67.00	4'-9½" RIGHT
PL64	L6013+67.00	6'-10" RIGHT
PL65	R6013+80.00	17'-5" LEFT

NO.	DATE	DESCRIPTION
1	3/14/08	ADDENDUM 3 - DRAWING MODIFIED

REVISIONS

THE PREPARATION OF THIS DOCUMENT HAS BEEN FINANCED IN PART THROUGH A GRANT FROM THE FEDERAL TRANSIT ADMINISTRATION, U.S. DEPARTMENT OF TRANSPORTATION, UNDER THE URBAN MASS TRANSPORTATION ACT OF 1964, AS AMENDED. FOR THE PORT AUTHORITY OF ALLEGHENY COUNTY, PENNSYLVANIA.

COMMONWEALTH OF PENNSYLVANIA REGISTERED PROFESSIONAL ENGINEER PETER DENNIS MAURITZ
SIGNATURE

DMJM HARRIS | AECOM
FOUR GATEWAY CENTER
20TH FLOOR
PITTSBURGH, PA. 15222

APPROVED — DATE 3/14/08

DESIGNED	RJS
DRAWN	NPD
CHECKED	CCB
IN CHARGE	DPR
DATE	FEB 1, 2008
SCALE	1/8"=1'-0"

PORT AUTHORITY OF ALLEGHENY COUNTY
PITTSBURGH PENNSYLVANIA

NORTH SHORE CONNECTOR
GATEWAY STATION SHELL
GATEWAY STATION PLAN @ PLATFORM LEVEL
SHEET 3 OF 3

Port Authority

CONTRACT NO. NSC-004R
DWG. NO. TN420 SHT. 85

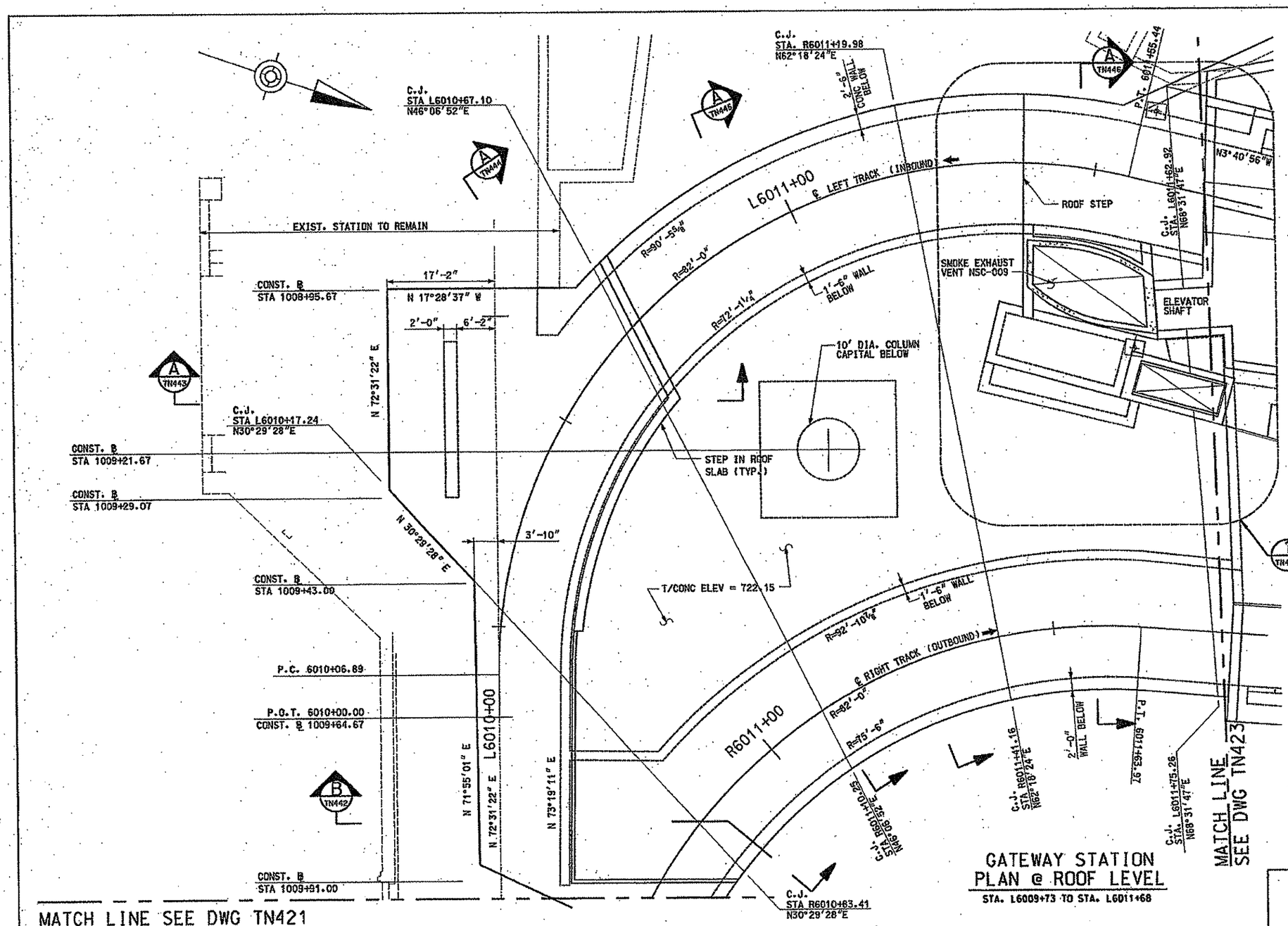

GATEWAY STATION PLAN @ ROOF LEVEL

STA. L6009+73 TO STA. L6011+68

NOTES:

1. FOR GENERAL NOTES, SEE DRAWINGS TN100 AND TN101.
2. FOR MORE INFORMATION, SEE DRAWING TN428.
3. CONSTRUCTION BASELINE IS A TANGENT SEGMENT OF THE 1981 TRACK CENTERLINE. THE PROPOSED LEFT TRACK PC STA. 6010+00 AT THE START OF THE LEFT TRACK COINCIDES WITH THE 1981 STA. 1009+64.67 UPSTATION FOR THE CONSTRUCTION BASELINE 1981 INBOUND TRACK CENTERLINE IS TO THE EAST. SEE DRAWING TN411.

NO.	DATE	DESCRIPTION

REVISIONS

THE PREPARATION OF THIS DOCUMENT HAS BEEN FINANCED IN PART THROUGH A GRANT FROM THE FEDERAL TRANSIT ADMINISTRATION, U.S. DEPARTMENT OF TRANSPORTATION, UNDER THE URBAN MASS TRANSPORTATION ACT OF 1964, AS AMENDED, FOR THE PORT AUTHORITY OF ALLEGHENY COUNTY, PENNSYLVANIA.

SIGNATURE

DMJM HARRIS | AECOM
FOUR GATEWAY CENTER
20TH FLOOR
PITTSBURGH, PA. 15222

APPROVED — DATE 2/1/08

DESIGNED	RJS
DRAWN	NFD
CHECKED	CCB
IN CHARGE	DPH
DATE	FEB 1, 2008
SCALE	1/8"=1'-0"

8' 4' 0 8'

PORT AUTHORITY OF ALLEGHENY COUNTY
PITTSBURGH PENNSYLVANIA

NORTH SHORE CONNECTOR
GATEWAY STATION SHELL
GATEWAY STATION PLAN @ ROOF LEVEL
SHEET 2 OF 4

Port Authority

CONTRACT NO. NSC-004R
DWG. NO. TN422 SHT. 87

NOTES:

1. FOR GENERAL NOTES, SEE DRAWINGS TN100 AND TN101.
2. FOR ADDITIONAL INFORMATION SEE DRAWINGS TN411 AND TN412.

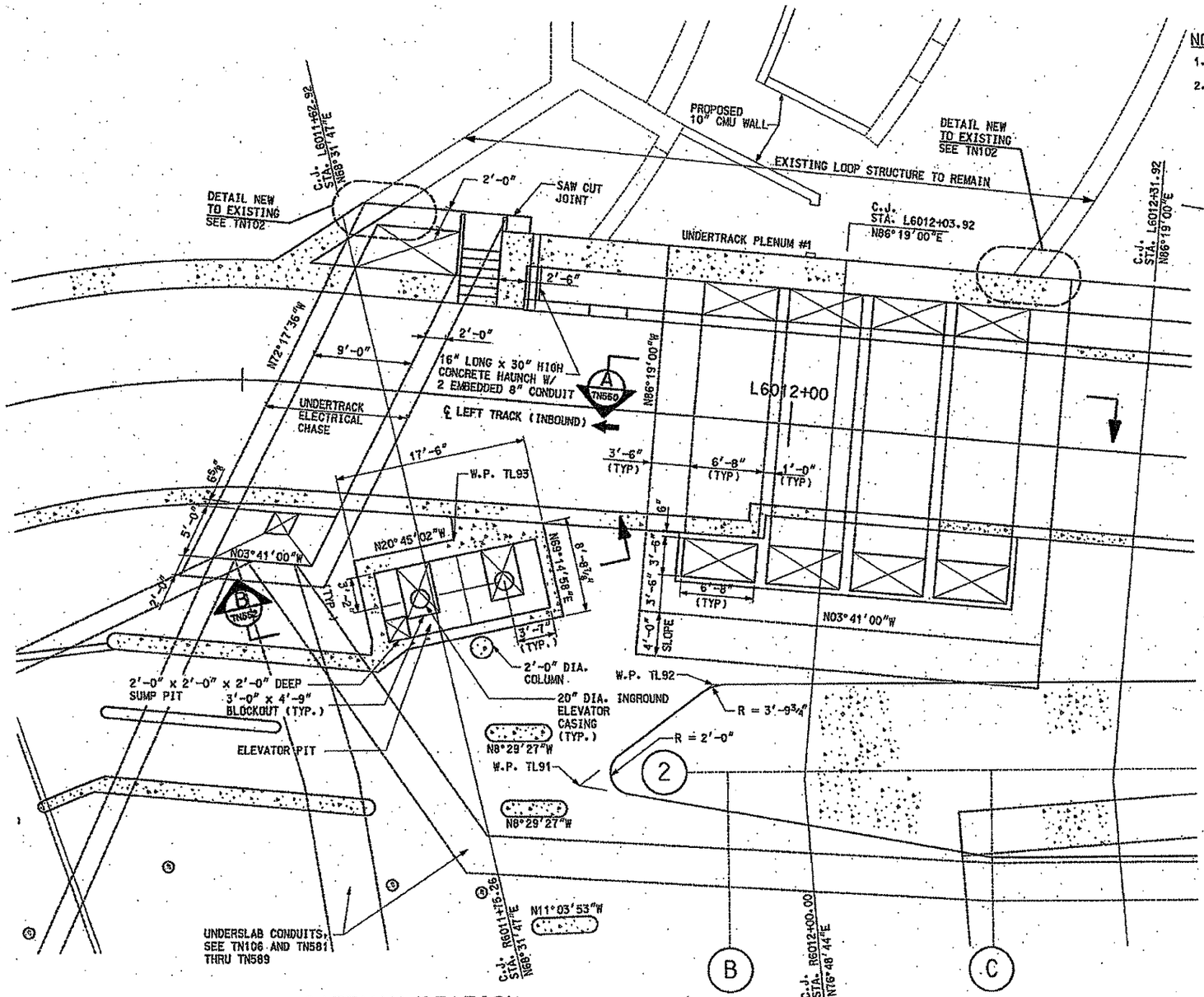

GATEWAY STATION
PARTIAL PLAN @ TRACK LEVEL (1) TN411 TN412

W.P.	STATION	OFFSET
TL91	L6011+63.63	34'-8 1/2" RIGHT
TL92	L6011+94.98	24'-5 5/8" RIGHT
TL93	L6011+70.41	13'-2 1/2" RIGHT

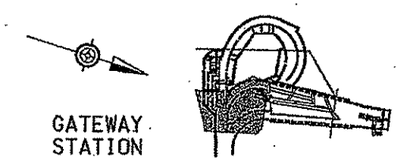

LOCUS
NO SCALE

NO.	DATE	DESCRIPTION

REVISIONS

THE PREPARATION OF THIS DOCUMENT HAS BEEN FINANCED IN PART THROUGH A GRANT FROM THE FEDERAL TRANSIT ADMINISTRATION, U.S. DEPARTMENT OF TRANSPORTATION, UNDER THE URBAN MASS TRANSPORTATION ACT OF 1964, AS AMENDED. FOR THE PORT AUTHORITY OF ALLEGHENY COUNTY, PENNSYLVANIA.

COMMONWEALTH OF PENNSYLVANIA REGISTERED PROFESSIONAL PETER DENNIS MANNITZ ENGINEER 027396-E

SIGNATURE

DMJM HARRIS | AECOM
FOUR GATEWAY CENTER
20TH FLOOR
PITTSBURGH, PA. 15222

APPROVED — DATE 2/1/08

DESIGNED	NM
DRAWN	NPD
CHECKED	CCB
IN CHARGE	DPH
DATE	FEB 1, 2008
SCALE	3/16"=1'-0"

4' 2' 0' 4'

PORT AUTHORITY OF ALLEGHENY COUNTY
PITTSBURGH PENNSYLVANIA

NORTH SHORE CONNECTOR
GATEWAY STATION SHELL
PARTIAL PLAN AT SOUTH EMERGENCY EGRESS STAIR @ TRACK LEVEL
SHEET 1 OF 3

Port Authority

CONTRACT NO. NSC-004R
DWG.NO. TN426 SHT. 90

$DATE$ $TIME$
$FILE$

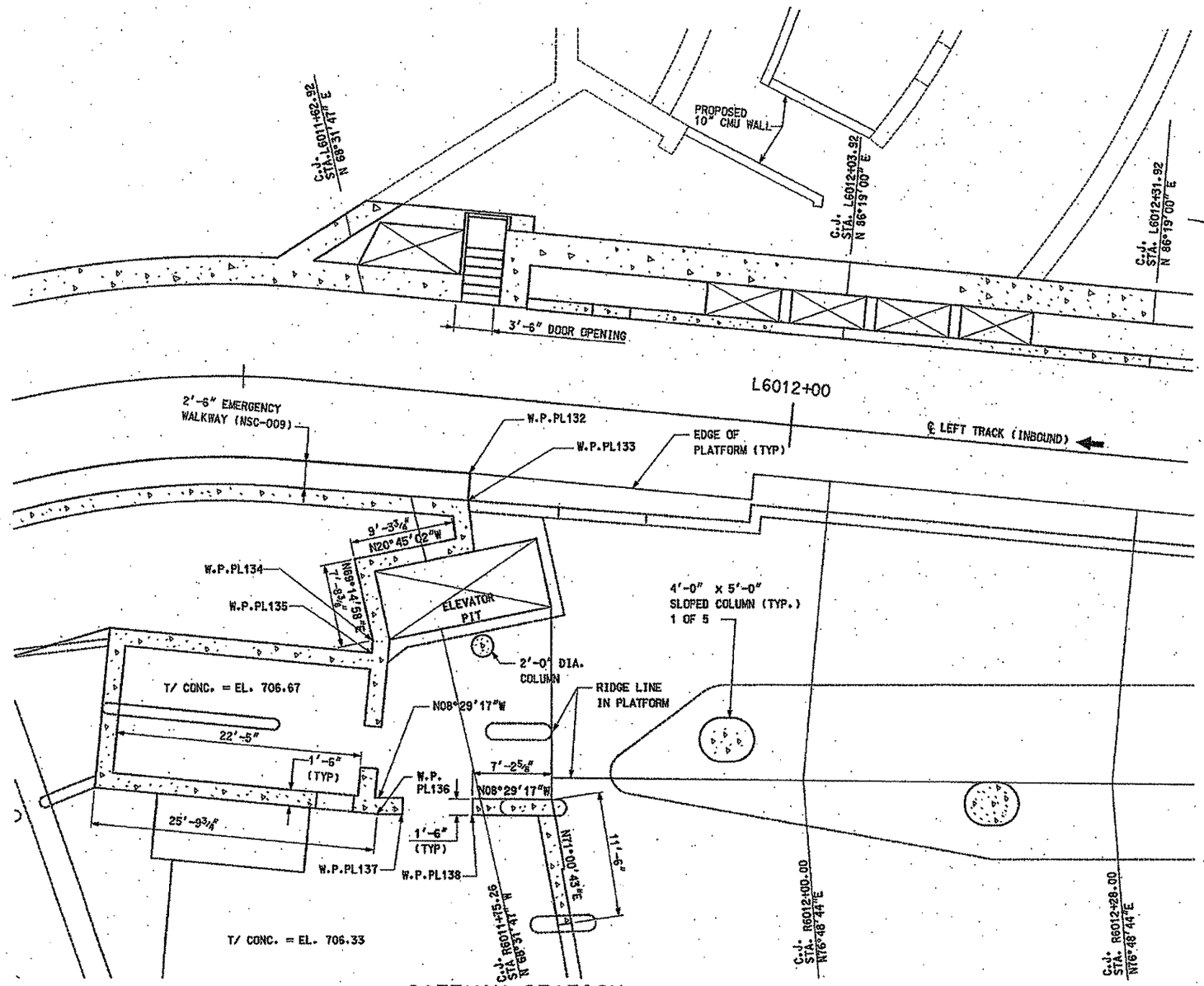

GATEWAY STATION
PARTIAL PLAN @ PLATFORM LEVEL (1) TN418 TN419

NOTES:

1. FOR GENERAL NOTES, SEE DRAWINGS TN100 AND TN101.
2. FOR ADDITIONAL INFORMATION SEE DRAWINGS TN418 AND TN419.
3. ALL WALL JOGS ARE 90° UNLESS OTHERWISE NOTED

W.P.	STATION	OFFSET
PL132	L6011+71.19	7'-4½" RIGHT
PL133	L6011+71.24	9'-7½" RIGHT
PL134	L6011+63.80	23'-3½" RIGHT
PL135	L6011+63.82	24'-5⅜" RIGHT
PL136	L6011+65.65	39'-1½" RIGHT
PL137	L6011+67.89	38'-11¼" RIGHT
PL138	L6011+74.22	38'-4⅞" RIGHT

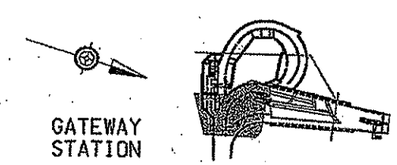

LOCUS
NO SCALE

NO.	DATE	DESCRIPTION

REVISIONS

THE PREPARATION OF THIS DOCUMENT HAS BEEN FINANCED IN PART THROUGH A GRANT FROM THE FEDERAL TRANSIT ADMINISTRATION, U.S. DEPARTMENT OF TRANSPORTATION, UNDER THE URBAN MASS TRANSPORTATION ACT OF 1964, AS AMENDED, FOR THE PORT AUTHORITY OF ALLEGHENY COUNTY, PENNSYLVANIA.

COMMONWEALTH OF PENNSYLVANIA REGISTERED PROFESSIONAL PETER DENGSS MAURITZ ENGINEER 027222

SIGNATURE

DMJM HARRIS | AECOM
FOUR GATEWAY CENTER
20TH FLOOR
PITTSBURGH, PA. 15222

APPROVED — DATE 2/1/08

DESIGNED	RJS
DRAWN	NPD
CHECKED	CCB
IN CHARGE	DPH
DATE	FEB 1, 2008
SCALE	3/16"=1'-0"

PORT AUTHORITY OF ALLEGHENY COUNTY
PITTSBURGH PENNSYLVANIA

NORTH SHORE CONNECTOR
GATEWAY STATION SHELL
PARTIAL PLAN AT SOUTH EMERGENCY EGRESS STAIR @ PLATFORM LEVEL
SHEET 2 OF 3

Port Authority

CONTRACT NO. NSC-004 R
DWG. NO. TN427 SHT. 91

$DATE$ $TIME$
$FILE$

NOTES:

1. FOR GENERAL NOTES, SEE DRAWINGS TN100 AND TN101.
2. FOR MORE INFORMATION, SEE DRAWING TN422.
3. FOR HATCH DETAILS SEE DRAWING TN106.

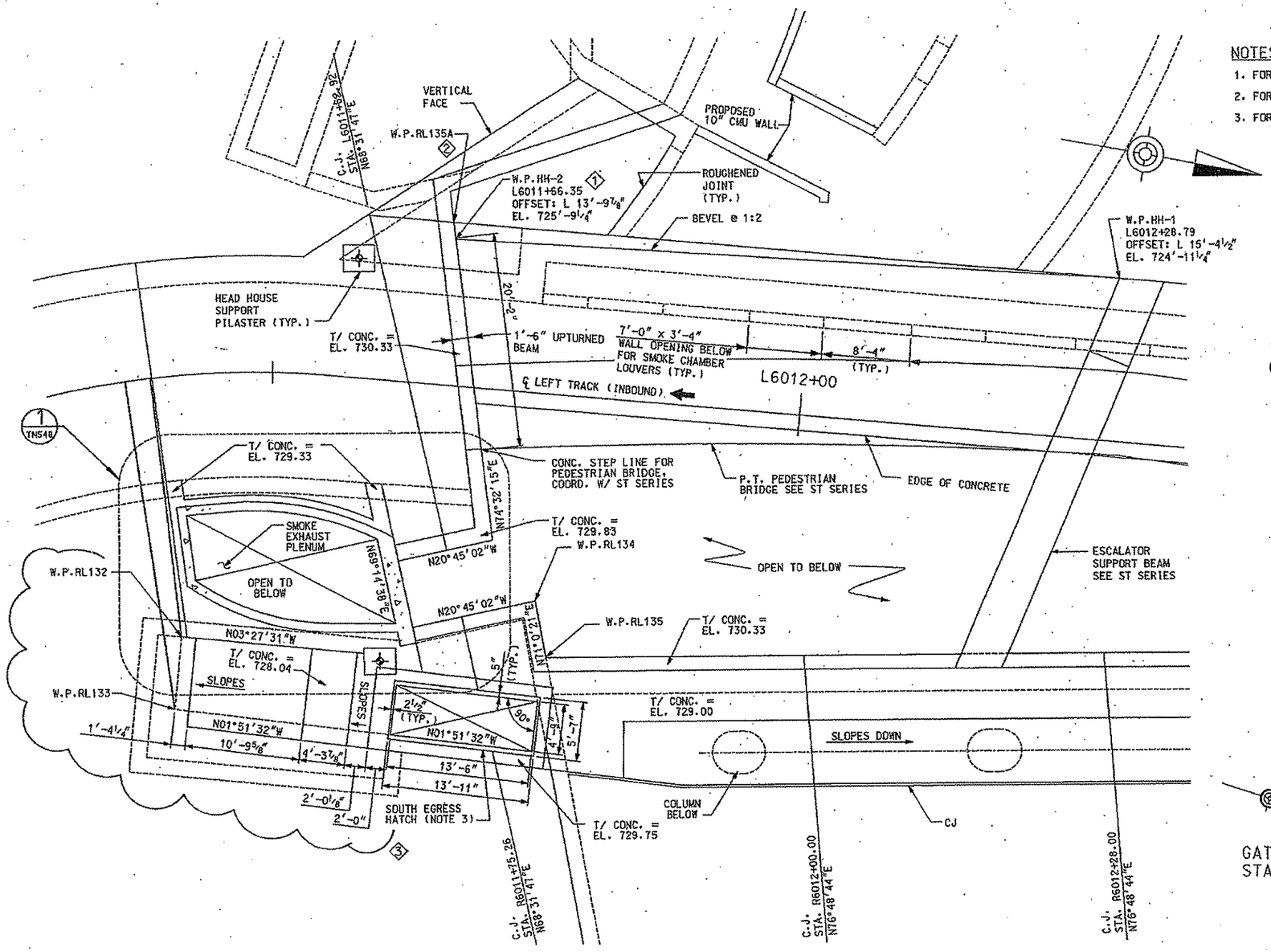

W.P.	STATION	OFFSET
RL131	L6011+37.59	10'-7 1/2" RIGHT
RL132	L6011+38.45	24'-7 3/4" RIGHT
RL133	L6011+36.11	31'-4 3/8" RIGHT
RL134	L6011+76.70	19'-7 1/4" RIGHT
RL135	L6011+78.14	24'-10 5/8" RIGHT
RL135A	L6011+66.02	15'-4 1/2" LEFT

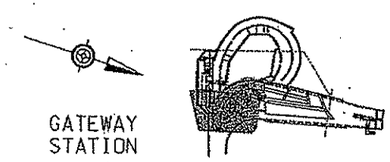

LOCUS
NO SCALE

GATEWAY STATION PARTIAL PLAN @ ROOF LEVEL

1 TN422 TN423

NO.	DATE	DESCRIPTION
3	3/27/08	ADDENDUM 6 - DRAWING MODIFIED
2	3/21/08	ADDENDUM 5 - DRAWING MODIFIED
1	3/14/08	ADDENDUM 3 - DRAWING MODIFIED

REVISIONS

THE PREPARATION OF THIS DOCUMENT HAS BEEN FINANCED IN PART THROUGH A GRANT FROM THE FEDERAL TRANSIT ADMINISTRATION, U.S. DEPARTMENT OF TRANSPORTATION, UNDER THE URBAN MASS TRANSPORTATION ACT OF 1964, AS AMENDED, FOR THE PORT AUTHORITY OF ALLEGHENY COUNTY, PENNSYLVANIA.

COMMONWEALTH OF PENNSYLVANIA REGISTERED PROFESSIONAL PETER DENNIS MAUSRITZ ENGINEER

SIGNATURE

DMJM HARRIS | AECOM
FOUR GATEWAY CENTER
20TH FLOOR
PITTSBURGH, PA. 15222

APPROVED DATE 3/27/08

DESIGNED	RJS
DRAWN	NPD
CHECKED	CCB
IN CHARGE	DPH
DATE	FEB 1, 2008
SCALE	3/16"=1'-0"

PORT AUTHORITY OF ALLEGHENY COUNTY
PITTSBURGH PENNSYLVANIA

NORTH SHORE CONNECTOR
GATEWAY STATION SHELL
PARTIAL PLAN AT SOUTH EMERGENCY EGRESS STAIR @ ROOF LEVEL
SHEET 3 OF 3

PORT AUTHORITY

CONTRACT NO. NSC-004R
DWG. NO. TN428 SHT. 92

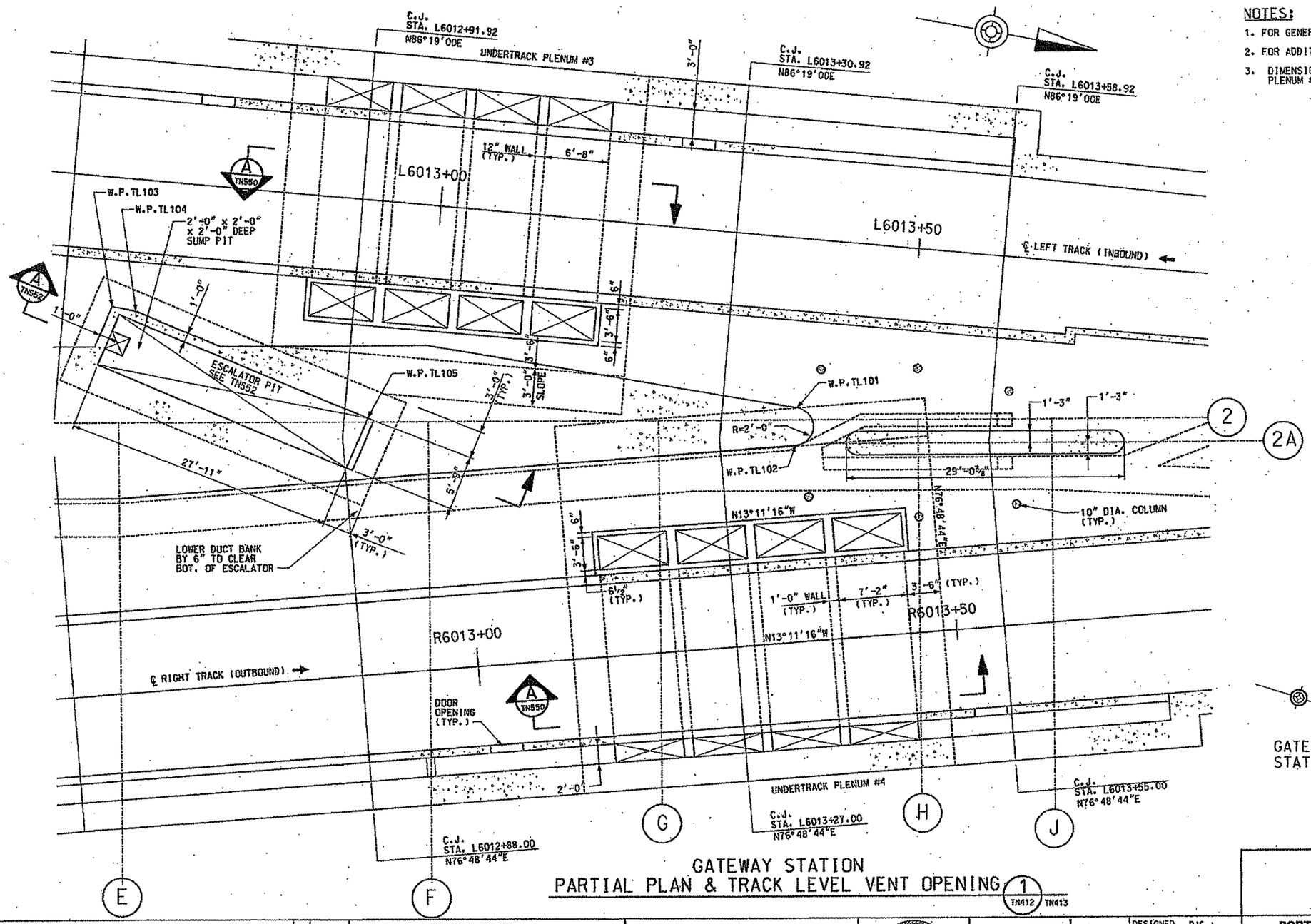

NOTES:

1. FOR GENERAL NOTES, SEE DRAWINGS TN100 AND TN101.
2. FOR ADDITIONAL INFORMATION SEE SHEET TN412 AND TN420.
3. DIMENSIONS FOR SMOKE PLENUM #2 ARE SIMILAR TO SMOKE PLENUM #4.

W.P.	STATION	OFFSET
TL101	L6013+38.66	17'-9" RIGHT
TL102	R6013+34.82	20'-7 1/2" LEFT
TL103	L6012+66.95	13'-5 3/8" RIGHT
TL104	L6012+69.46	13'-8 3/4" RIGHT
TL105	L6012+94.33	22'-9 1/4" RIGHT

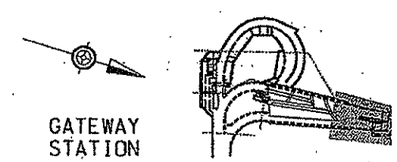

LOCUS
NO SCALE

GATEWAY STATION
PARTIAL PLAN & TRACK LEVEL VENT OPENING (1) TN412 TN413

NO.	DATE	DESCRIPTION

REVISIONS

THE PREPARATION OF THIS DOCUMENT HAS BEEN FINANCED IN PART THROUGH A GRANT FROM THE FEDERAL TRANSIT ADMINISTRATION, U.S. DEPARTMENT OF TRANSPORTATION, UNDER THE URBAN MASS TRANSPORTATION ACT OF 1964, AS AMENDED, FOR THE PORT AUTHORITY OF ALLEGHENY COUNTY, PENNSYLVANIA.

REGISTERED PROFESSIONAL ENGINEER COMMONWEALTH OF PENNSYLVANIA PETER DENNIS MARRITZ 049361

SIGNATURE

DMJM HARRIS | AECOM
FOUR GATEWAY CENTER
20TH FLOOR
PITTSBURGH, PA. 15222

APPROVED — DATE 2/1/08

DESIGNED	RJS
DRAWN	NPD
CHECKED	CCB
IN CHARGE	DPH
DATE	FEB 1, 2008
SCALE	3/16"=1'-0"

PORT AUTHORITY OF ALLEGHENY COUNTY
PITTSBURGH PENNSYLVANIA

NORTH SHORE CONNECTOR
GATEWAY STATION SHELL
PARTIAL PLAN AT VENT CHASE @ TRACK LEVEL
SHEET 1 OF 2

Port Authority

CONTRACT NO. NSC-004R
DWG. NO. TN429 SHT. 99

$DATE$ $TIME$
$FILE$

NOTES:

1. FOR GENERAL NOTES. SEE DRAWINGS TN100 AND TN101.
2. FOR ADDITIONAL INFORMATION SEE SHEET TN419 AND TN420
3. WORK THIS DRAWING WITH TN552.

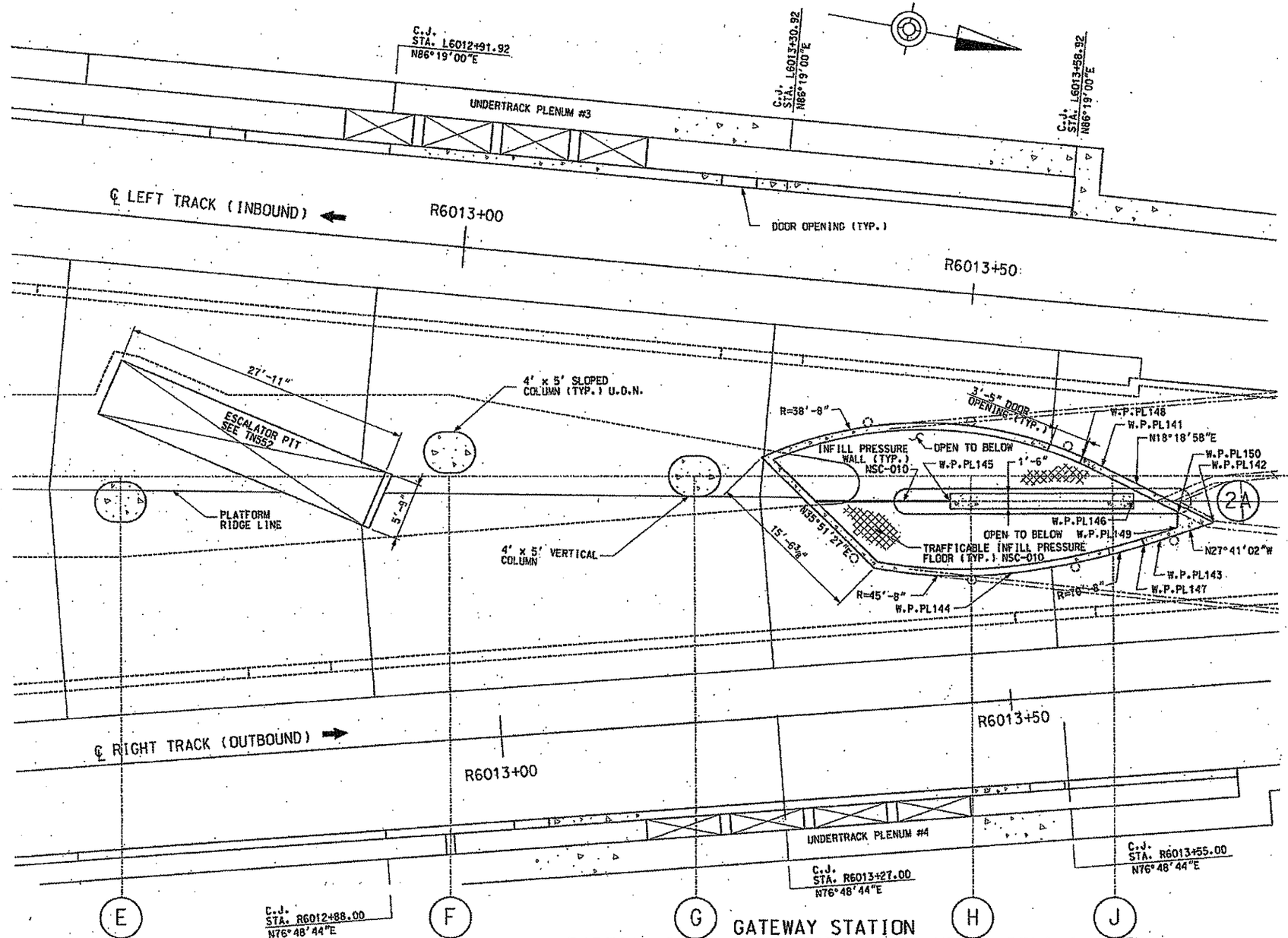

2

W.P.	STATION	OFFSET
PL141	L6013+64.12	15'-8⅝" RIGHT
PL142	L6013+75.34	20'-3" RIGHT
PL143	L6013+70.38	22-5¾" RIGHT
PL144	L6013+56.12	27'-0¾" RIGHT
PL145	L6013+49.55	20'-6⅜" RIGHT
PL146	L6013+67.47	18'-9⅞" RIGHT
PL147	L6013+68.88	23-1⅛" RIGHT
PL148	L6013+62.16	14'-11⅝" RIGHT
PL149	L6013+71.89	21'-0⅝" RIGHT
PL150	L6013+71.87	19'-6⅛" RIGHT

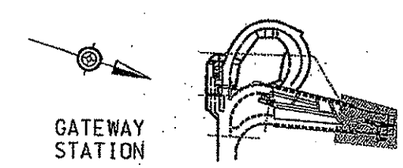

LOCUS
NO SCALE

GATEWAY STATION
PARTIAL PLAN & PLATFORM LEVEL VENT OPENING

1
TN419 TN420

NO.	DATE	DESCRIPTION

REVISIONS

THE PREPARATION OF THIS DOCUMENT HAS BEEN FINANCED IN PART THROUGH A GRANT FROM THE FEDERAL TRANSIT ADMINISTRATION, U.S. DEPARTMENT OF TRANSPORTATION, UNDER THE URBAN MASS TRANSPORTATION ACT OF 1964, AS AMENDED, FOR THE PORT AUTHORITY OF ALLEGHENY COUNTY, PENNSYLVANIA.

REGISTERED PROFESSIONAL ENGINEER PETER DENNIS MAURITZ COMMONWEALTH OF PENNSYLVANIA

SIGNATURE

DMJM HARRIS | AECOM
FOUR GATEWAY CENTER
20TH FLOOR
PITTSBURGH, PA. 15222

APPROVED — DATE 2/1/08

DESIGNED	RJS
DRAWN	NPD
CHECKED	CCB
IN CHARGE	DPH
DATE	FEB 1, 2008
SCALE	3/16"=1'-0" (4' 2' 0 4')

PORT AUTHORITY OF ALLEGHENY COUNTY
PITTSBURGH PENNSYLVANIA

NORTH SHORE CONNECTOR
GATEWAY STATION SHELL
PARTIAL PLAN AT VENT CHASE @ PLATFORM LEVEL
SHEET 2 OF 2

Port Authority

CONTRACT NO. NSC-004R
DWG. NO. TN430 SHT. 94

DATE 9 STAGE 9
DATE 9 FILE 9

NOTES:

1. FOR GENERAL NOTES, SEE DRAWINGS TN100 AND TN101.
2. FOR ADDITIONAL INFORMATION SEE DRAWING TN413.

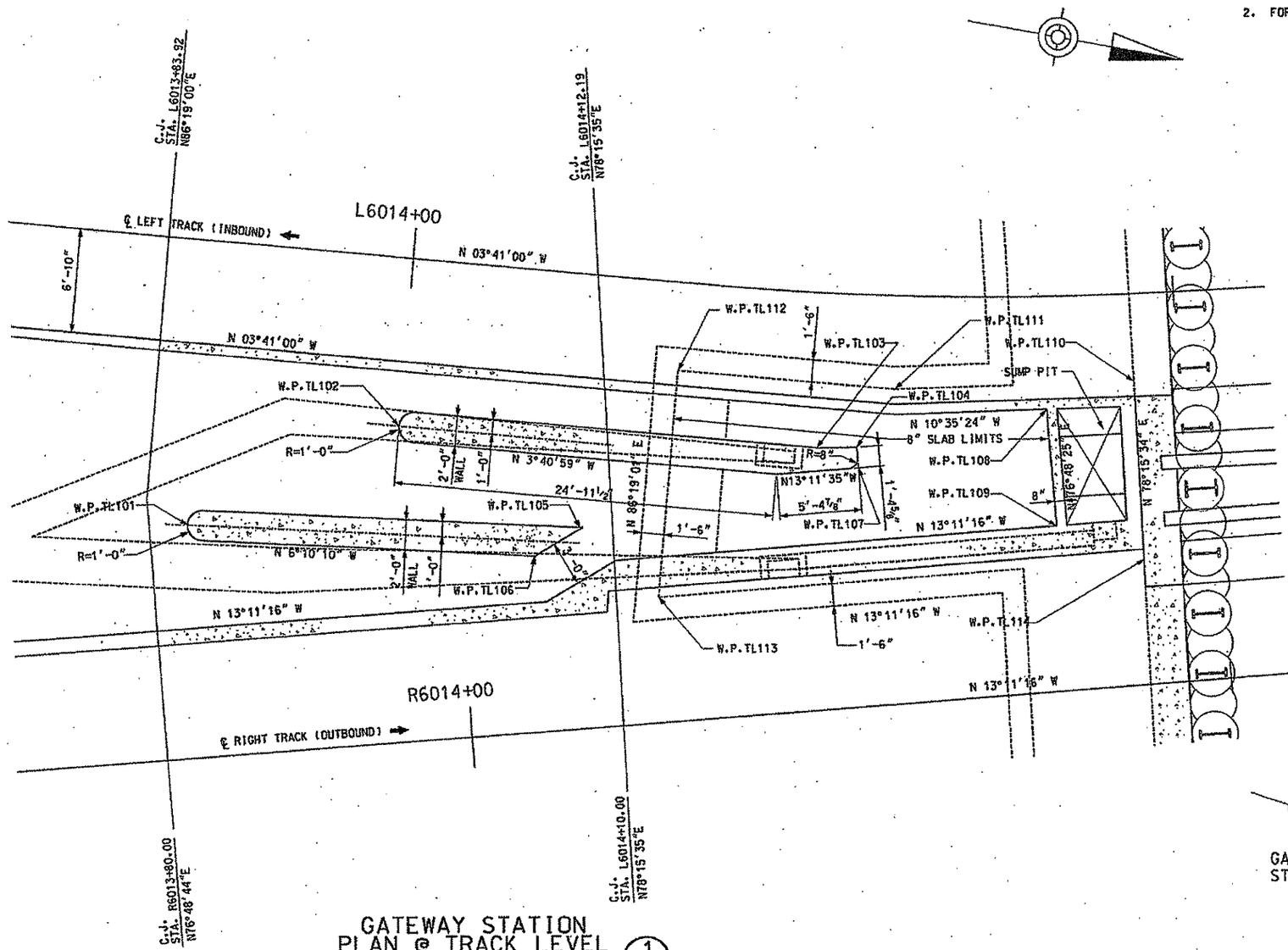

W.P.	STATION	OFFSET
TL101	R6013+82.53	15'-5⅝" LEFT
TL102	L6014+00.00	11'-1½" RIGHT
TL103	L6014+27.11	10'-3" RIGHT
TL104	L6014+29.58	10'-1⅛" RIGHT
TL105	R6014+08.36	13'-3¾" LEFT
TL106	R6014+05.10	11'-8¼" LEFT
TL107	L6014+29.74	11'-5⅝" RIGHT
TL108	L6014+41.48	7'-5⅝" RIGHT
TL109	R6014+39.35	10'-11⅞" LEFT
TL110	L6014+47.09	5'-9⅝" RIGHT
TL111	L6013+31.85	6'-2¼" RIGHT
TL112	L6014+17.93	5'-10⅛" RIGHT
TL113	R6014+12.95	8'-3⅝" LEFT
TL114	R6014+44.93	8'-3⅞" LEFT

GATEWAY STATION

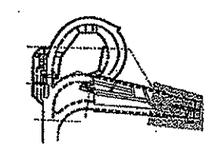

LOCUS
NO SCALE

GATEWAY STATION PLAN @ TRACK LEVEL

1
TN413

NO.	DATE	DESCRIPTION

REVISIONS

THE PREPARATION OF THIS DOCUMENT HAS BEEN FINANCED IN PART THROUGH A GRANT FROM THE FEDERAL TRANSIT ADMINISTRATION, U.S. DEPARTMENT OF TRANSPORTATION, UNDER THE URBAN MASS TRANSPORTATION ACT OF 1964, AS AMENDED, FOR THE PORT AUTHORITY OF ALLEGHENY COUNTY, PENNSYLVANIA.

COMMONWEALTH OF PENNSYLVANIA REGISTERED PROFESSIONAL PETER DENNIS MOURITZ ENGINEER

SIGNATURE

DMJM HARRIS | AECOM
FOUR GATEWAY CENTER
20TH FLOOR
PITTSBURGH, PA. 15222

APPROVED — DATE 2/1/08

DESIGNED	MM
DRAWN	NPD
CHECKED	CCB
IN CHARGE	DPH
DATE	FEB 1, 2008
SCALE	1/4"=1'-0"

4' 2' 0 4'

PORT AUTHORITY OF ALLEGHENY COUNTY
PITTSBURGH PENNSYLVANIA

NORTH SHORE CONNECTOR
GATEWAY STATION SHELL
PARTIAL PLAN AT NORTH EMERGENCY EGRESS STAIR @ TRACK LEVEL
SHEET 1 OF 3

Port Authority

CONTRACT NO. NSC-004R
DWG. NO. TN431 SHT. 95

$DATE$ $TIME$
$FILE$

NOTES:

1. FOR GENERAL NOTES, SEE DRAWINGS TN100 AND TN101.
2. FOR MORE INFORMATION SEE DRAWING TN420.
3. SUPPLY HEAVY WELDED STEEL GRATING 2"x1/4", 19-W-4 BY OHIO GRATINGS, INC. OR EQUIVALENT.

W.P.	STATION	OFFSET
PL101	L6013+80.47	14'-8½" RIGHT
PL102	L6013+82.54	16'-8⅝" RIGHT
PL103	R6013+81.02	15'-2⅞" LEFT
PL104	R6013+84.93	9'-11¼" LEFT
PL105	R6014+07.72	9'-8" LEFT
PL106	R6014+26.85	9'-0" LEFT
PL107	R6014+47.39	9'-0" LEFT
PL108	L6013+81.87	15'-1¾" RIGHT
PL109	L6013+95.08	12'-9½" RIGHT
PL110	L6013+95.29	17'-6½" RIGHT
PL111	L6014+24.68	12'-2⅛" RIGHT
PL112	L6014+49.62	9'-9¾" RIGHT
PL113	L6014+10.21	12'-1½" RIGHT
PL114	L6014+10.32	16'-10½" RIGHT

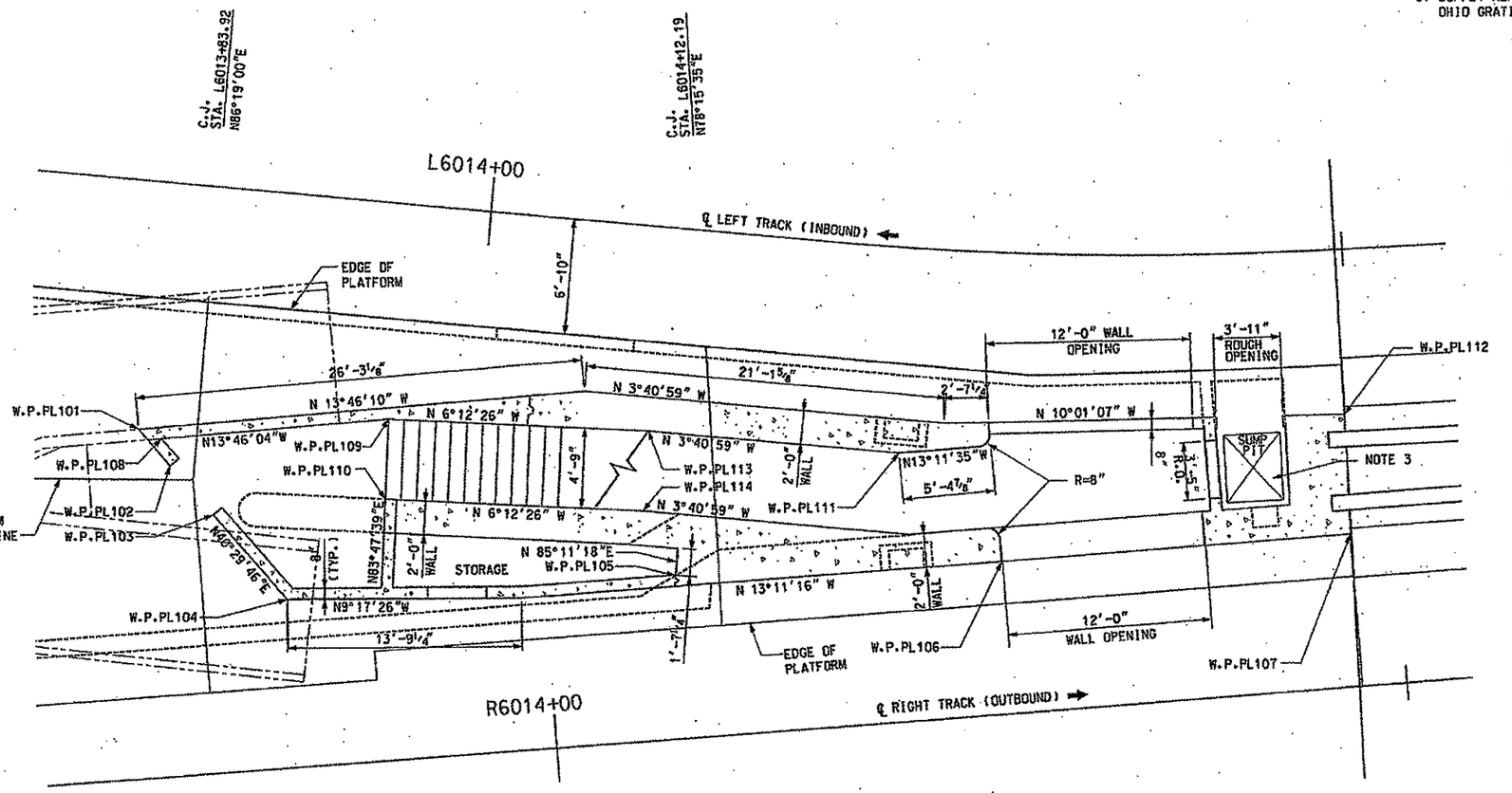

GATEWAY STATION PLAN @ PLATFORM LEVEL (1 / TN420)

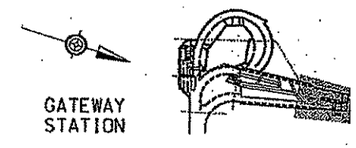

LOCUS
NO SCALE

NO.	DATE	DESCRIPTION

REVISIONS

THE PREPARATION OF THIS DOCUMENT HAS BEEN FINANCED IN PART THROUGH A GRANT FROM THE FEDERAL TRANSIT ADMINISTRATION, U.S. DEPARTMENT OF TRANSPORTATION, UNDER THE URBAN MASS TRANSPORTATION ACT OF 1964, AS AMENDED, FOR THE PORT AUTHORITY OF ALLEGHENY COUNTY, PENNSYLVANIA.

PETER DENNIS MARRITZ — PROFESSIONAL ENGINEER — PENNSYLVANIA

SIGNATURE

DMJM HARRIS | AECOM
FOUR GATEWAY CENTER
20TH FLOOR
PITTSBURGH, PA. 15222

APPROVED — DATE 2/1/08

DESIGNED	RJS
DRAWN	NPD
CHECKED	CCB
IN CHARGE	DPH
DATE	FEB 1, 2008
SCALE	1/4"=1'-0"

4' 2' 0 4'

PORT AUTHORITY OF ALLEGHENY COUNTY
PITTSBURGH PENNSYLVANIA

NORTH SHORE CONNECTOR
GATEWAY STATION SHELL
PARTIAL PLAN AT NORTH EMERGENCY EGRESS STAIR @ PLATFORM LEVEL
SHEET 2 OF 3

Port Authority

CONTRACT NO. NSC-004R
DWG. NO. TN432 SHT. 96

$DATE$ $TIME$
$FILE$

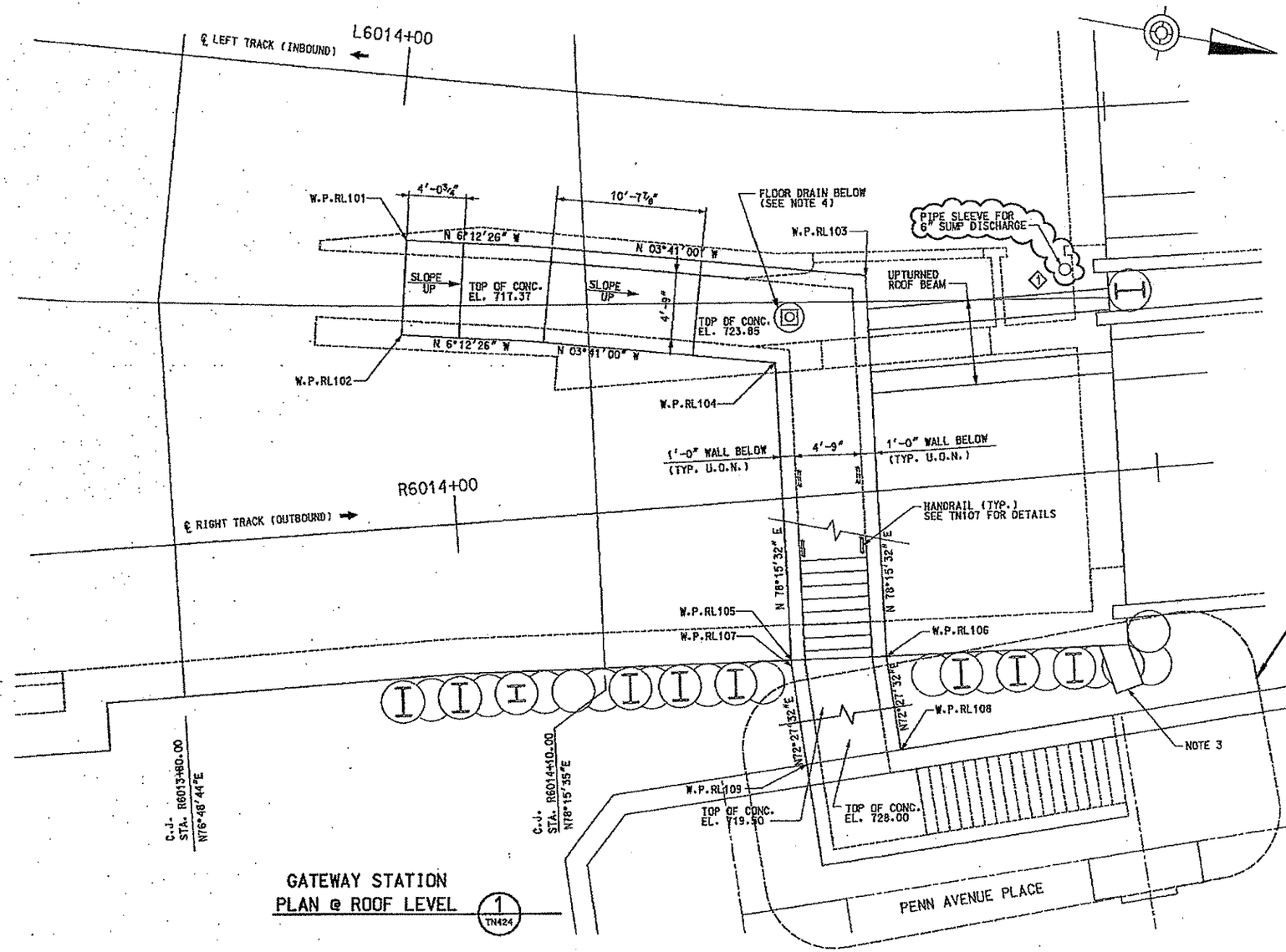

GATEWAY STATION
PLAN @ ROOF LEVEL (1 / TN424)

NOTES:

1. FOR GENERAL NOTES, SEE DRAWINGS TN100 AND TN101.
2. FOR MORE INFORMATION SEE TN424.
3. AFTER STRUCTURE IS COMPLETE, CUT OPENING IN SUPPORT OF EXCAVATION WALL AT ROOF LOW POINT. FILL WITH +/- ONE CUBIC YARD CRUSHED STONE WRAPPED IN FILTER FABRIC. TYPICAL EACH SIDE.
4. SEE PL SERIES DRAWINGS FOR LOCATIONS AND SIZE.

W.P.	STATION	OFFSET
RL101	L6014+01.10	11'-6¼" RIGHT
RL102	L6014+01.39	18'-3¼" RIGHT
RL103	L6014+33.22	11'-6⅞" RIGHT
RL104	L6014+27.45	18'-0¼" RIGHT
RL105	R6014+22.97	11'-6" RIGHT
RL106	R6014+29.72	11'-9⅛" RIGHT
RL107	R6014+22.96	11'11¾" RIGHT
RL108	R6014+30.22	18'-5⅜" RIGHT
RL109	R6014+23.50	18'-11½" RIGHT

NO.	DATE	DESCRIPTION
1	3/14/08	ADDENDUM 3 - DRAWING MODIFIED

REVISIONS

THE PREPARATION OF THIS DOCUMENT HAS BEEN FINANCED IN PART THROUGH A GRANT FROM THE FEDERAL TRANSIT ADMINISTRATION, U.S. DEPARTMENT OF TRANSPORTATION, UNDER THE URBAN MASS TRANSPORTATION ACT OF 1964, AS AMENDED. FOR THE PORT AUTHORITY OF ALLEGHENY COUNTY, PENNSYLVANIA.

COMMONWEALTH OF PENNSYLVANIA REGISTERED PROFESSIONAL PETER DENNIS MAURITZ 049740

SIGNATURE

DMJM HARRIS | AECOM
FOUR GATEWAY CENTER
20TH FLOOR
PITTSBURGH, PA. 15222

APPROVED — DATE 3/14/08

DESIGNED	RJS
DRAWN	NPD
CHECKED	CCB
IN CHARGE	DPH
DATE	FEB 1, 2008
SCALE	1/4"=1'-0"

PORT AUTHORITY OF ALLEGHENY COUNTY
PITTSBURGH PENNSYLVANIA

NORTH SHORE CONNECTOR
GATEWAY STATION SHELL
PARTIAL PLAN AT NORTH EMERGENCY EGRESS STAIR @ ROOF LEVEL
SHEET 3 OF 3

Port Authority

CONTRACT NO. NSC-004R
DWG. NO. TN433 SHT. 97

6. THE NORTH EGRESS STAIR, FROM THE CORRIDOR ELEVATION 715.35 PROCEED DOWN 11 RISERS AT 7¼ PER RISER TO AN INTERMEDIATE LANDING, 8 FEET LONG AT ELEVATION 706.70, PROCEED DOWN 10 RISERS AT 7¼ INCHESTO THE BOTTOM RISER AT 11 INCHES TO ACCOMODATE THE 4 INCH TOPPING SLAB. FOR STAIR DETAILS SEE TN121.

NOTES:

1. FOR GENERAL NOTES, SEE DRAWING TN100 AND TN101.
2. VERIFY LOCATION IN FIELD PRIOR TO FABRICATION OF ALL INTERFACE ITEMS. ADJUST TO SUIT.
3. LONGITUDINAL ELEVATION FROM LEFT TRACK IS TAKEN FROM LEFT TRACK BASELINE FACING UPSTATION AND LOOKING TO THE RIGHT.
4. VOLUME OF SUMP PIT 450 CF MINIMUM.
5. ROUGH OPENING FOR VERTICAL WALL MOUNTED DAMPER.

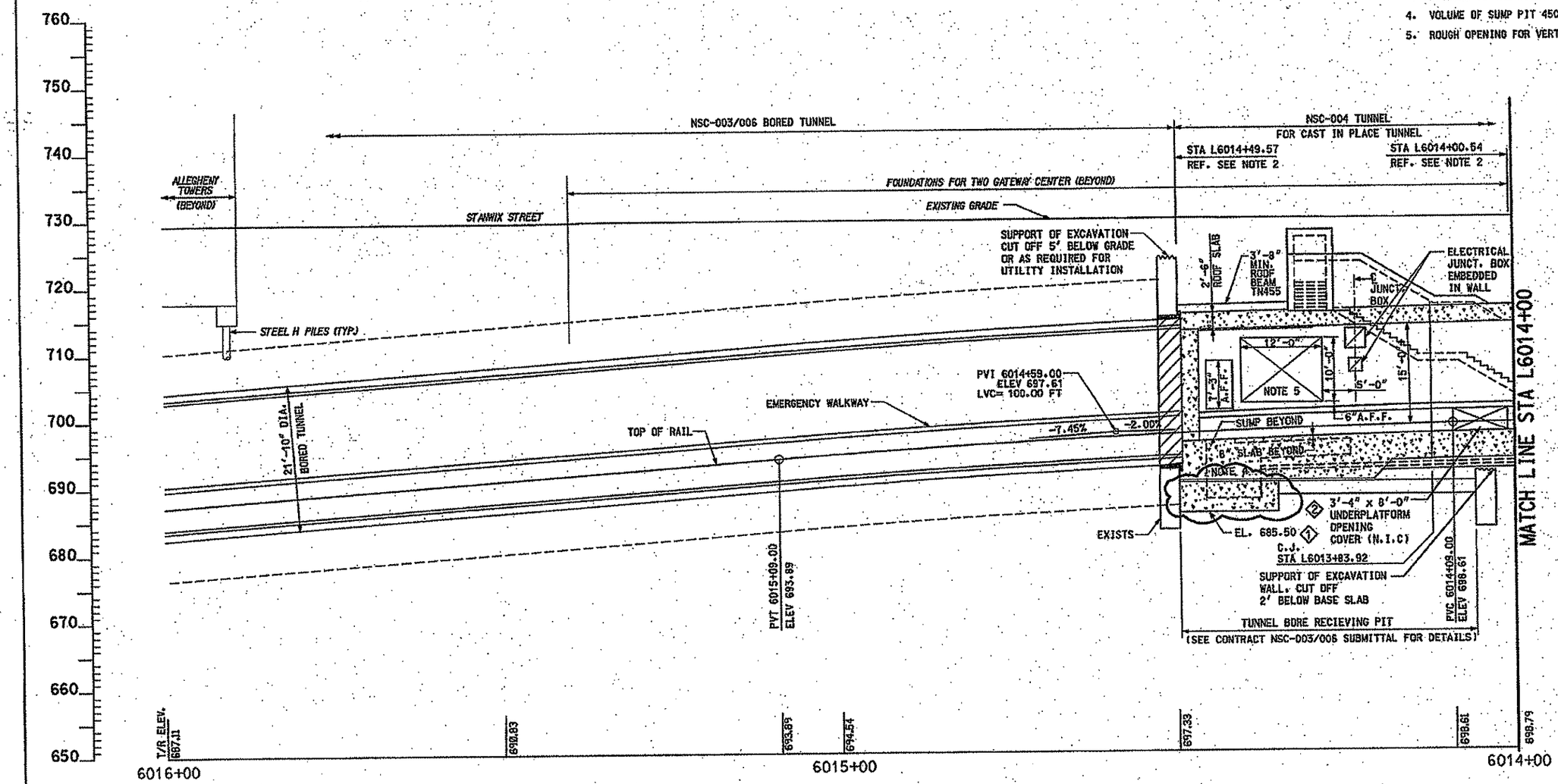

LONGITUDINAL ELEVATION

STA L6016+00 TO STA L6014+00

NO.	DATE	DESCRIPTION
2	4/03/08	ADDENDUM 7 - DRAWING MODIFIED
1	3/14/08	ADDENDUM 3 - DRAWING MODIFIED

REVISIONS

THE PREPARATION OF THIS DOCUMENT HAS BEEN FINANCED IN PART THROUGH A GRANT FROM THE FEDERAL TRANSIT ADMINISTRATION, U.S. DEPARTMENT OF TRANSPORTATION, UNDER THE URBAN MASS TRANSPORTATION ACT OF 1964, AS AMENDED, FOR THE PORT AUTHORITY OF ALLEGHENY COUNTY, PENNSYLVANIA.

COMMONWEALTH OF PENNSYLVANIA REGISTERED PROFESSIONAL ENGINEER PETER DENNIS MAURITZ NUMBER 027863

SIGNATURE

DMJM HARRIS | AECOM

FOUR GATEWAY CENTER
20TH FLOOR
PITTSBURGH, PA. 15222

APPROVED 4/3/08 DATE

DESIGNED	RJS
DRAWN	NPD
CHECKED	CCB
IN CHARGE	DPH
DATE	FEB 1, 2008
SCALE	1/8"=1'-0"

8' 4' 0 8'

PORT AUTHORITY OF ALLEGHENY COUNTY
PITTSBURGH PENNSYLVANIA

NORTH SHORE CONNECTOR
GATEWAY STATION SHELL
LONGITUDINAL ELEVATION
STA L6016+00 TO STA L6014+00

PORT AUTHORITY

CONTRACT NO. NSC-004R

DWG. NO. TN435 SHT. 98

NOTES:

1. FOR GENERAL NOTES, SEE DRAWING TN100 AND TN101.
2. VERIFY LOCATION IN FIELD PRIOR TO FABRICATION OF ALL INTERFACE ITEMS. ADJUST TO SUIT.
3. LONGITUDINAL ELEVATION FROM LEFT TRACK IS TAKEN FROM LEFT TRACK BASELINE FACING UPSTATION AND LOOKING TO THE RIGHT.

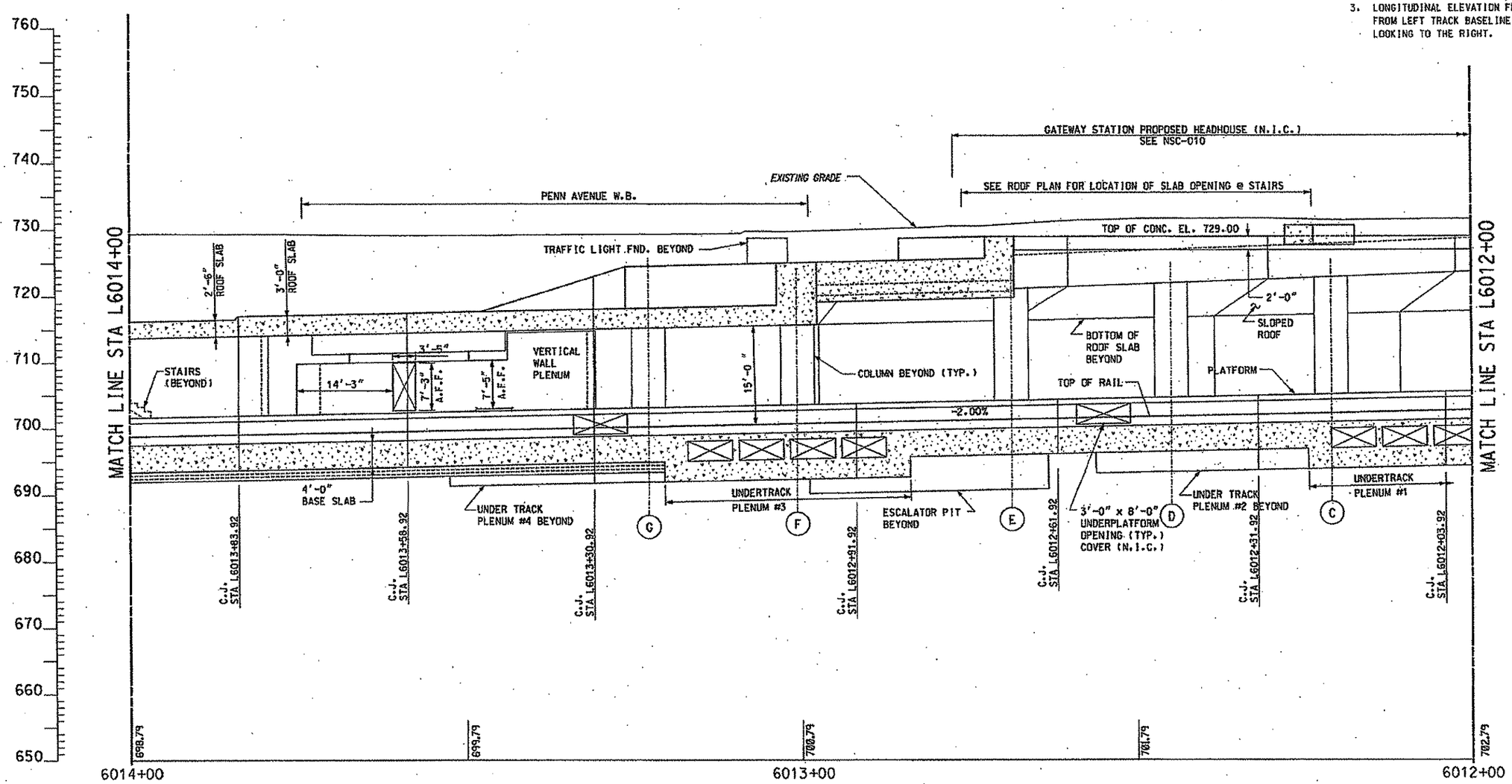

LONGITUDINAL ELEVATION

STA L6014+00 TO STA L6012+00

NO.	DATE	DESCRIPTION

REVISIONS

THE PREPARATION OF THIS DOCUMENT HAS BEEN FINANCED IN PART THROUGH A GRANT FROM THE FEDERAL TRANSIT ADMINISTRATION, U.S. DEPARTMENT OF TRANSPORTATION, UNDER THE URBAN MASS TRANSPORTATION ACT OF 1964, AS AMENDED, FOR THE PORT AUTHORITY OF ALLEGHENY COUNTY, PENNSYLVANIA.

SIGNATURE

DMJM HARRIS | AECOM
FOUR GATEWAY CENTER
20TH FLOOR
PITTSBURGH, PA. 15222

APPROVED — DATE 2/1/08

DESIGNED	RJS
DRAWN	NPD
CHECKED	CCB
IN CHARGE	DPH
DATE	FEB 1, 2008
SCALE	1/8"=1'-0"

8' 4' 0 8'

PORT AUTHORITY OF ALLEGHENY COUNTY
PITTSBURGH PENNSYLVANIA

NORTH SHORE CONNECTOR
GATEWAY STATION SHELL
LONGITUDINAL ELEVATION
STA L6014+00 TO STA L6012+00

Port Authority

CONTRACT NO. NSC-004R
DWG. NO. TN436 SHT. 99

NOTES:

1. FOR GENERAL NOTES, SEE DRAWING TN100 AND TN101.
2. VERIFY LOCATION IN FIELD PRIOR TO FABRICATION OF ALL INTERFACE ITEMS. ADJUST TO SUIT.
3. LONGITUDINAL ELEVATION FROM LEFT TRACK IS TAKEN FROM LEFT TRACK BASELINE FACING UPSTATION AND LOOKING TO THE RIGHT.

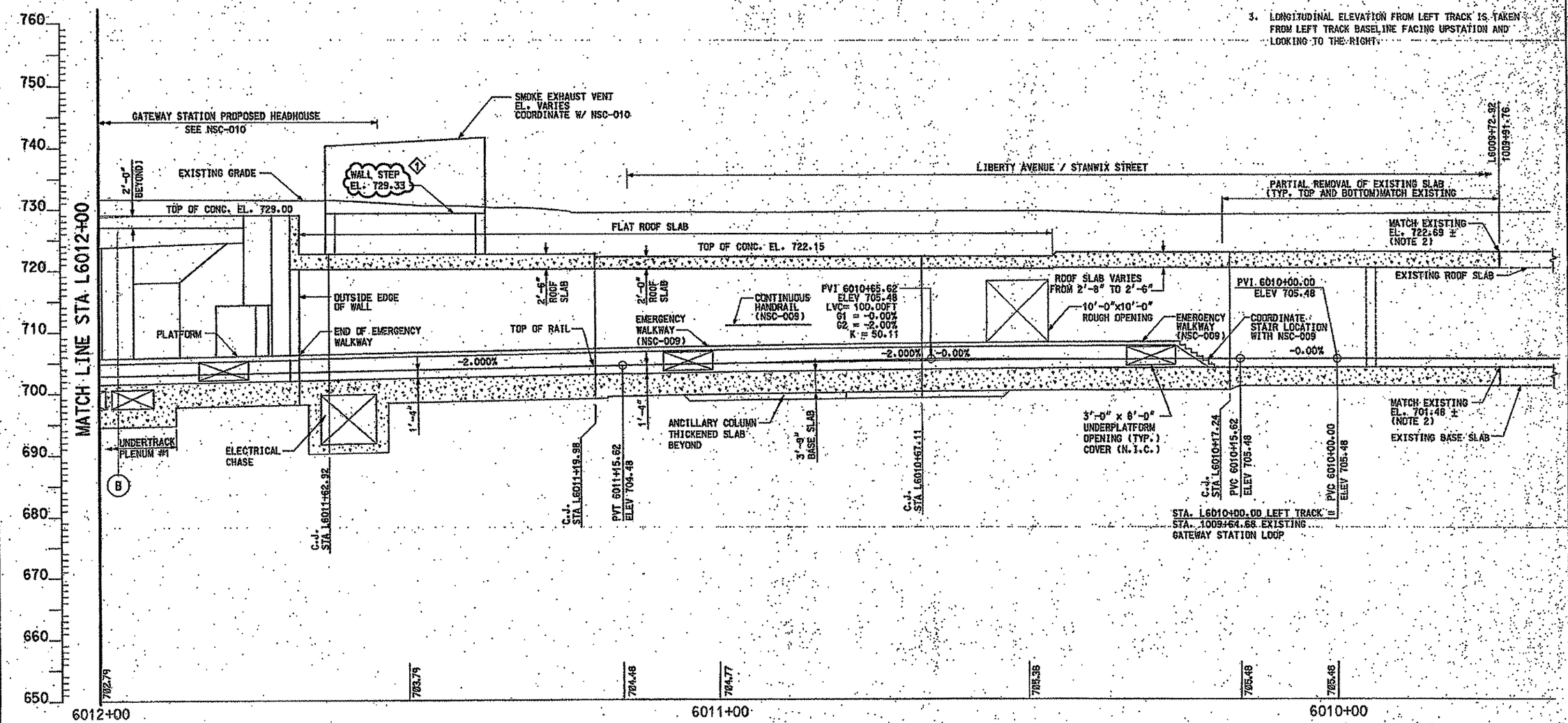

LONGITUDINAL ELEVATION

STA L6012+00 TO STA L6009+65

NO.	DATE	DESCRIPTION
1	3/21/08	ADDENDUM 6 - DRAWING MODIFIED

REVISIONS

THE PREPARATION OF THIS DOCUMENT HAS BEEN FINANCED IN PART THROUGH A GRANT FROM THE FEDERAL TRANSIT ADMINISTRATION, U.S. DEPARTMENT OF TRANSPORTATION, UNDER THE URBAN MASS TRANSPORTATION ACT OF 1964, AS AMENDED, FOR THE PORT AUTHORITY OF ALLEGHENY COUNTY, PENNSYLVANIA.

REGISTERED PROFESSIONAL PETER DENNIS MAURITZ PENNSYLVANIA

SIGNATURE

DMJM HARRIS | AECOM

FOUR GATEWAY CENTER
20TH FLOOR
PITTSBURGH, PA. 15222

APPROVED — DATE 3/21/08

DESIGNED	RJS
DRAWN	NPD
CHECKED	CCB
IN CHARGE	DPH
DATE	FEB 1, 2008
SCALE	1/8"=1'-0"

8' 4' 0 8'

PORT AUTHORITY OF ALLEGHENY COUNTY
PITTSBURGH PENNSYLVANIA

NORTH SHORE CONNECTOR
GATEWAY STATION SHELL
LONGITUDINAL ELEVATION
STA L6012+00 TO STA L6009+65

Port Authority

CONTRACT NO. NSC-604R
DWG.NO. TN437 SHT. 100

NOTES:

1. FOR GENERAL NOTES, SEE DRAWING TN100 AND TN101.
2. VERIFY LOCATION IN FIELD PRIOR TO FABRICATION OF ALL INTERFACE ITEMS. ADJUST TO SUIT.
3. LONGITUDINAL ELEVATION FROM RIGHT TRACK IS TAKEN FROM RIGHT TRACK BASELINE FACING UPSTATION AND LOOKING TO THE LEFT.

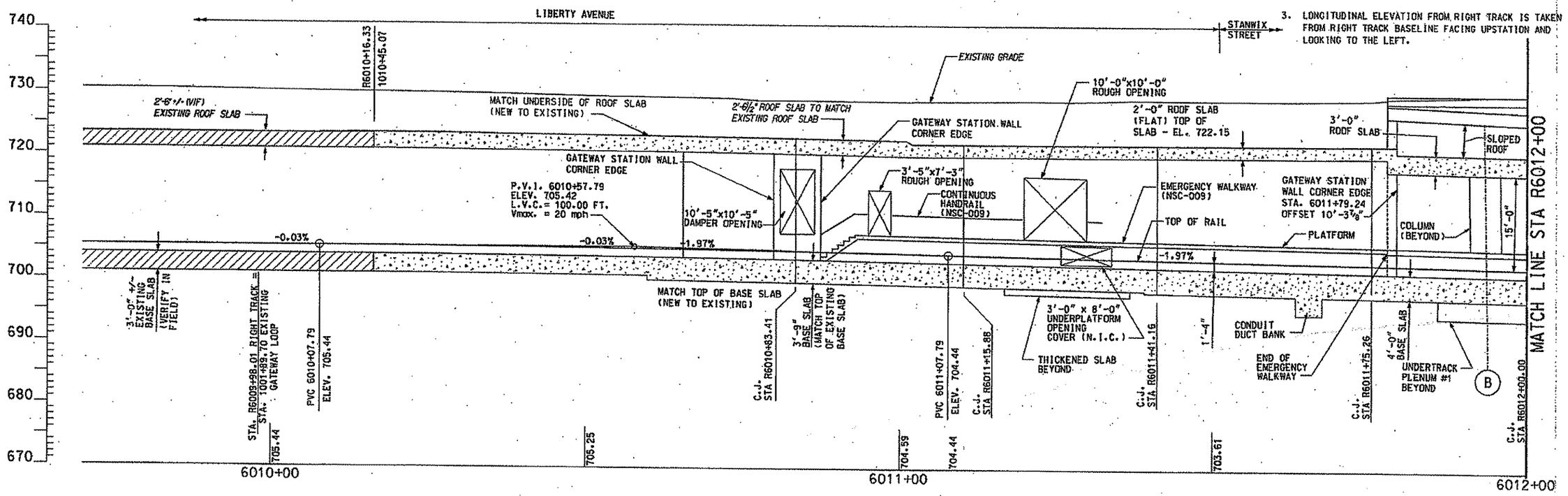

LONGITUDINAL ELEVATION

STA R6009+70 TO STA R6012+00

NO.	DATE	DESCRIPTION

REVISIONS

THE PREPARATION OF THIS DOCUMENT HAS BEEN FINANCED IN PART THROUGH A GRANT FROM THE FEDERAL TRANSIT ADMINISTRATION, U.S. DEPARTMENT OF TRANSPORTATION, UNDER THE URBAN MASS TRANSPORTATION ACT OF 1964, AS AMENDED. FOR THE PORT AUTHORITY OF ALLEGHENY COUNTY, PENNSYLVANIA.

COMMONWEALTH OF PENNSYLVANIA REGISTERED PROFESSIONAL PETER DENNIS HARRITZ

SIGNATURE

DMJM HARRIS | AECOM

FOUR GATEWAY CENTER
20TH FLOOR
PITTSBURGH, PA. 15222

APPROVED — DATE 2/1/08

DESIGNED	RJS
DRAWN	NPD
CHECKED	CCB
IN CHARGE	DPH
DATE	FEB 1, 2008
SCALE	1/8"=1'-0"

8' 4' 0 8'

PORT AUTHORITY OF ALLEGHENY COUNTY
PITTSBURGH PENNSYLVANIA

NORTH SHORE CONNECTOR
GATEWAY STATION SHELL NEAR RECEIVING PIT
LONGITUDINAL ELEVATION
STA R6009+70 TO STA R6012+00

Port Authority

CONTRACT NO. NSC-004R
DWG.NO. TN438 SHT. 101

$DATE$ $TIME$
$FILE$

NOTES:

1. FOR GENERAL NOTES, SEE DRAWING TN100 AND TN101.
2. VERIFY LOCATION IN FIELD PRIOR TO FABRICATION OF ALL INTERFACE ITEMS. ADJUST TO SUIT.
3. LONGITUDINAL ELEVATION FROM RIGHT TRACK IS TAKEN FROM RIGHT TRACK BASELINE FACING UPSTATION AND LOOKING TO THE LEFT.

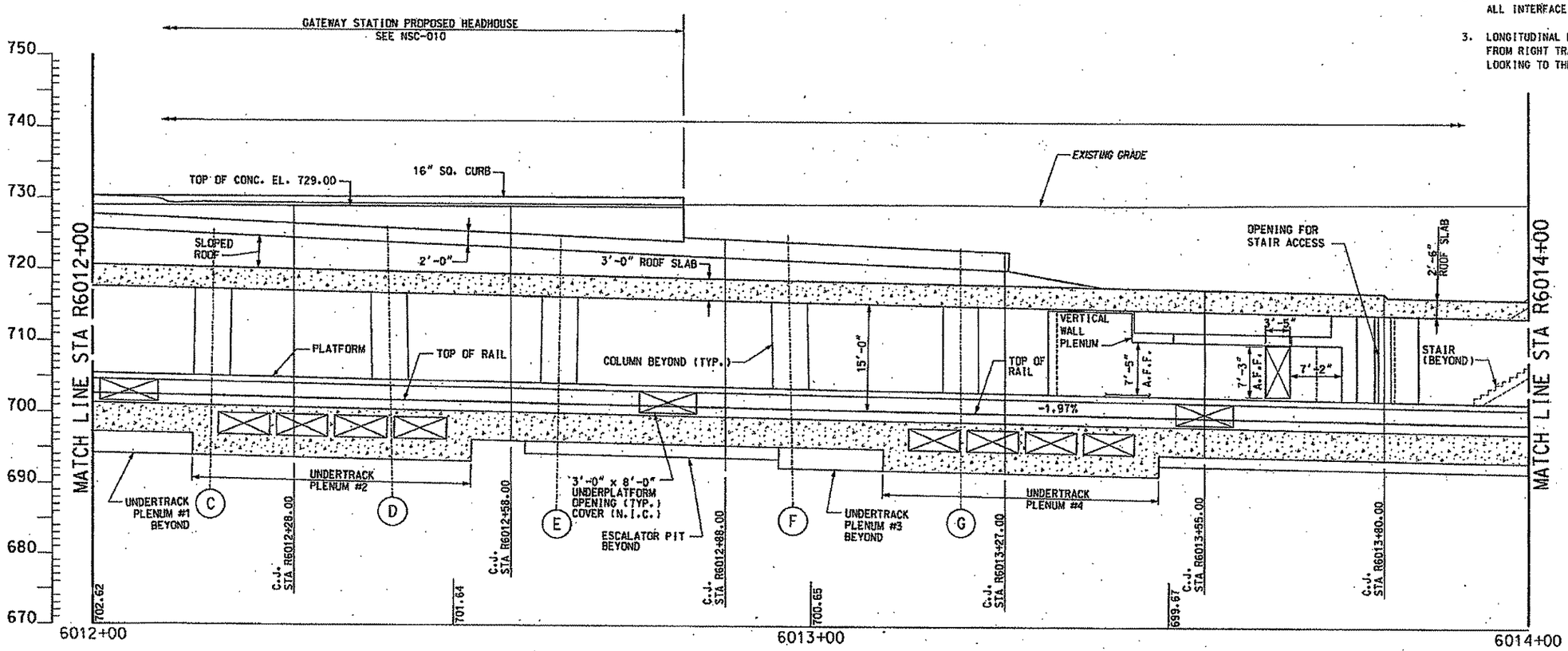

LONGITUDINAL ELEVATION

STA R6012+00 TO STA R6014+00

NO.	DATE	DESCRIPTION

REVISIONS

THE PREPARATION OF THIS DOCUMENT HAS BEEN FINANCED IN PART THROUGH A GRANT FROM THE FEDERAL TRANSIT ADMINISTRATION, U.S. DEPARTMENT OF TRANSPORTATION, UNDER THE URBAN MASS TRANSPORTATION ACT OF 1964, AS AMENDED. FOR THE PORT AUTHORITY OF ALLEGHENY COUNTY, PENNSYLVANIA.

COMMONWEALTH OF PENNSYLVANIA PROFESSIONAL ENGINEER PETER DENNIS MONTETZ

SIGNATURE

DMJM HARRIS | AECOM
FOUR GATEWAY CENTER
20TH FLOOR
PITTSBURGH, PA. 15222

APPROVED — DATE 2/1/08

DESIGNED	RJS
DRAWN	NPD
CHECKED	CCB
IN CHARGE	DPH
DATE	FEB 1, 2008
SCALE	1/8"=1'-0" (8' 4' 0 8')

PORT AUTHORITY OF ALLEGHENY COUNTY
PITTSBURGH PENNSYLVANIA

NORTH SHORE CONNECTOR
GATEWAY STATION SHELL NEAR RECEIVING PIT
LONGITUDINAL ELEVATION
STA R6012+00 TO STA R6014+00

Port Authority

CONTRACT NO. NSC-004R
DWG. NO. TN439 SHT. 102

$DATE$ $TIME$
$FILE$

NOTES:

1. FOR GENERAL NOTES, SEE DRAWING TN100 AND TN101.
2. VERIFY LOCATION IN FIELD PRIOR TO FABRICATION OF ALL INTERFACE ITEMS. ADJUST TO SUIT.
3. LONGITUDINAL ELEVATION FROM RIGHT TRACK IS TAKEN FROM RIGHT TRACK BASELINE FACING UPSTATION AND LOOKING TO THE LEFT.
4. VOLUME OF SUMP PIT 450 CF MINIMUM.
5. ROUGH OPENING FOR VERTICAL WALL MOUNTED DAMPER.

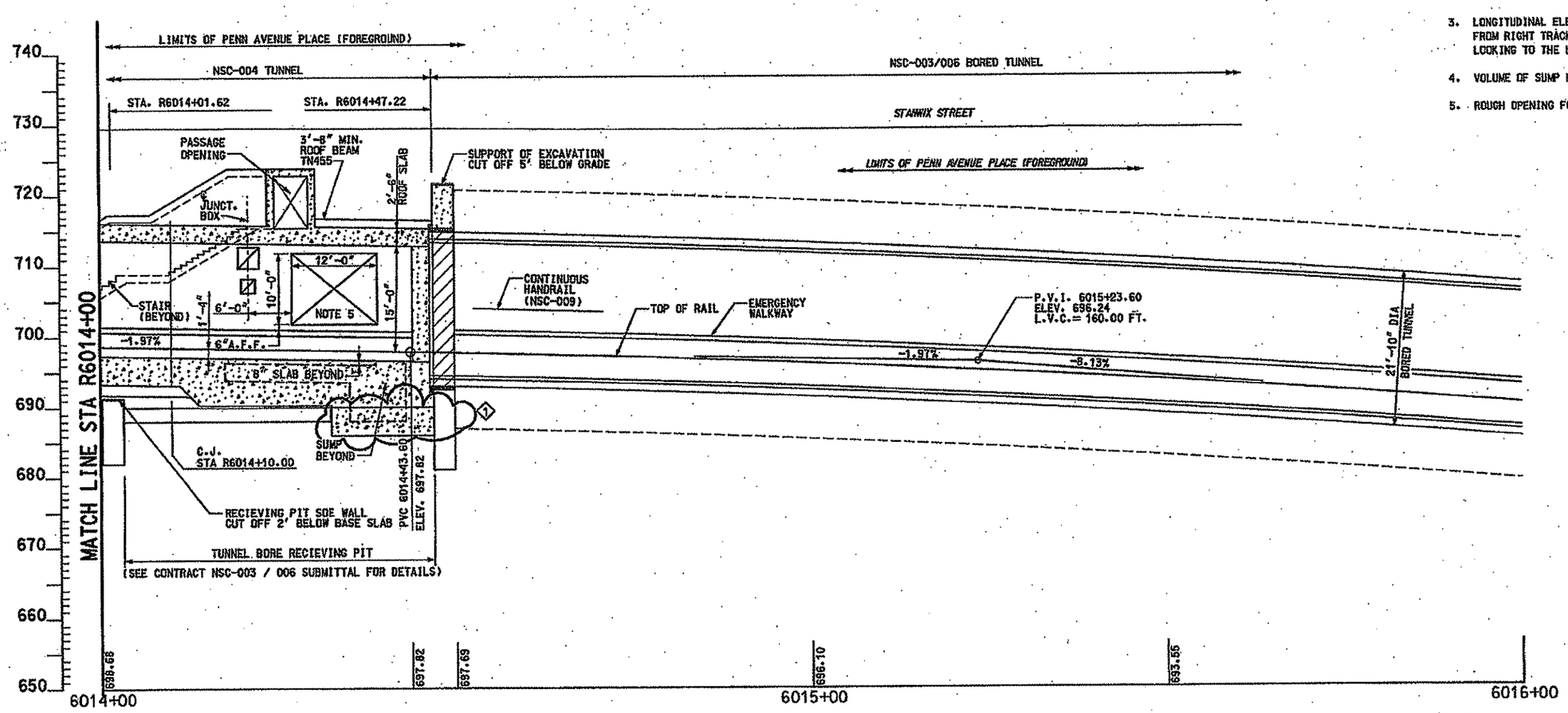

LONGITUDINAL ELEVATION

STA R6014+00 TO STA R6016+00

NO.	DATE	DESCRIPTION
1	4/03/08	ADDENDUM 7 – DRAWING MODIFIED

REVISIONS

THE PREPARATION OF THIS DOCUMENT HAS BEEN FINANCED IN PART THROUGH A GRANT FROM THE FEDERAL TRANSIT ADMINISTRATION, U.S. DEPARTMENT OF TRANSPORTATION, UNDER THE URBAN MASS TRANSPORTATION ACT OF 1964, AS AMENDED, FOR THE PORT AUTHORITY OF ALLEGHENY COUNTY, PENNSYLVANIA.

SIGNATURE

DMJM HARRIS | AECOM
FOUR GATEWAY CENTER
20TH FLOOR
PITTSBURGH, PA. 15222

APPROVED — DATE 4/3/08

DESIGNED	RJS
DRAWN	NPD
CHECKED	CCB
IN CHARGE	DPH
DATE	FEB 1, 2008
SCALE	1/8"=1'-0"

PORT AUTHORITY OF ALLEGHENY COUNTY
PITTSBURGH PENNSYLVANIA

NORTH SHORE CONNECTOR
GATEWAY STATION SHELL NEAR RECEIVING PIT
LONGITUDINAL ELEVATION
STA R6014+00 TO STA R6016+00

PORT AUTHORITY

CONTRACT NO. NSC-004R
DWG. NO. TN440 SHT. 103

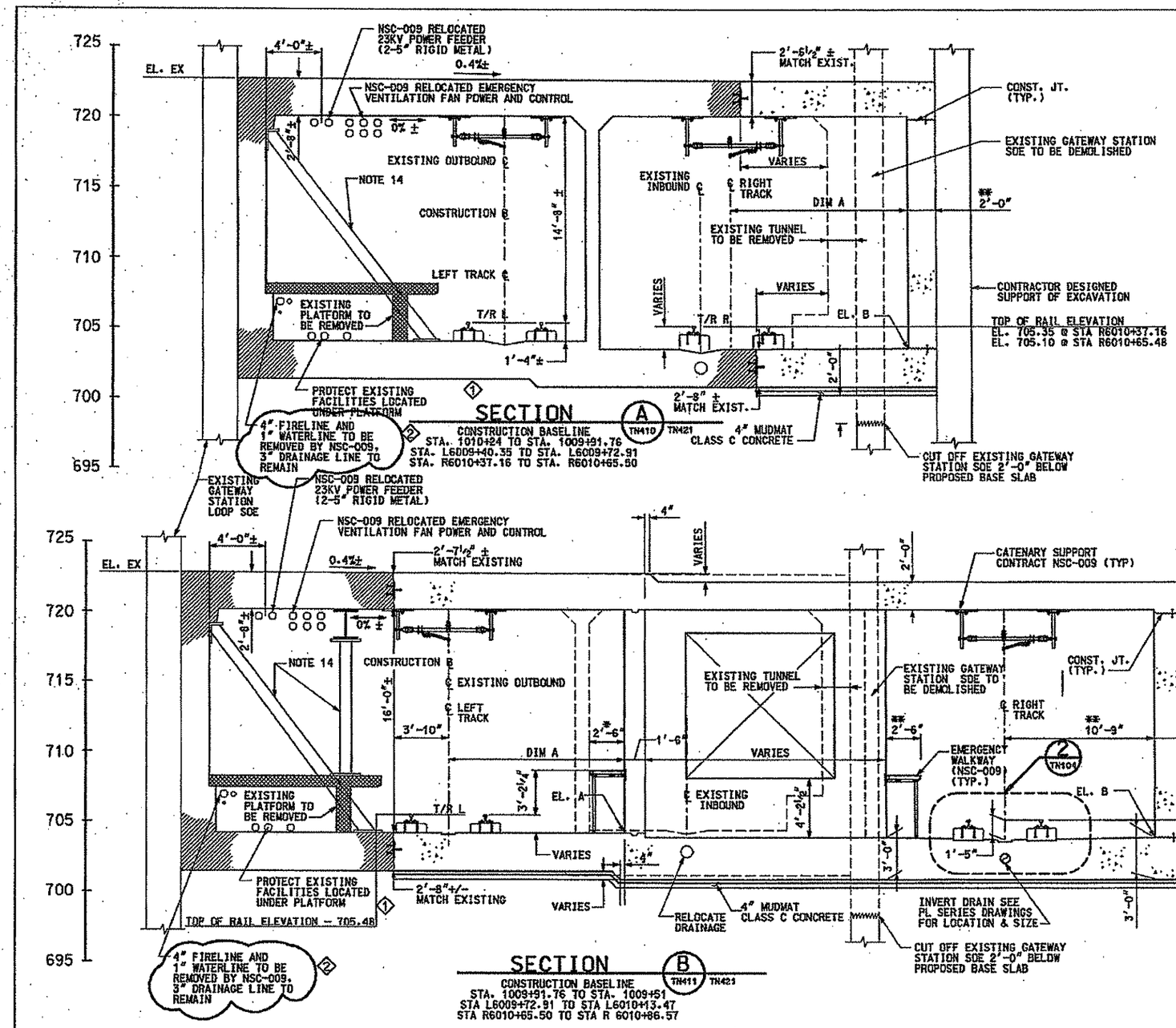

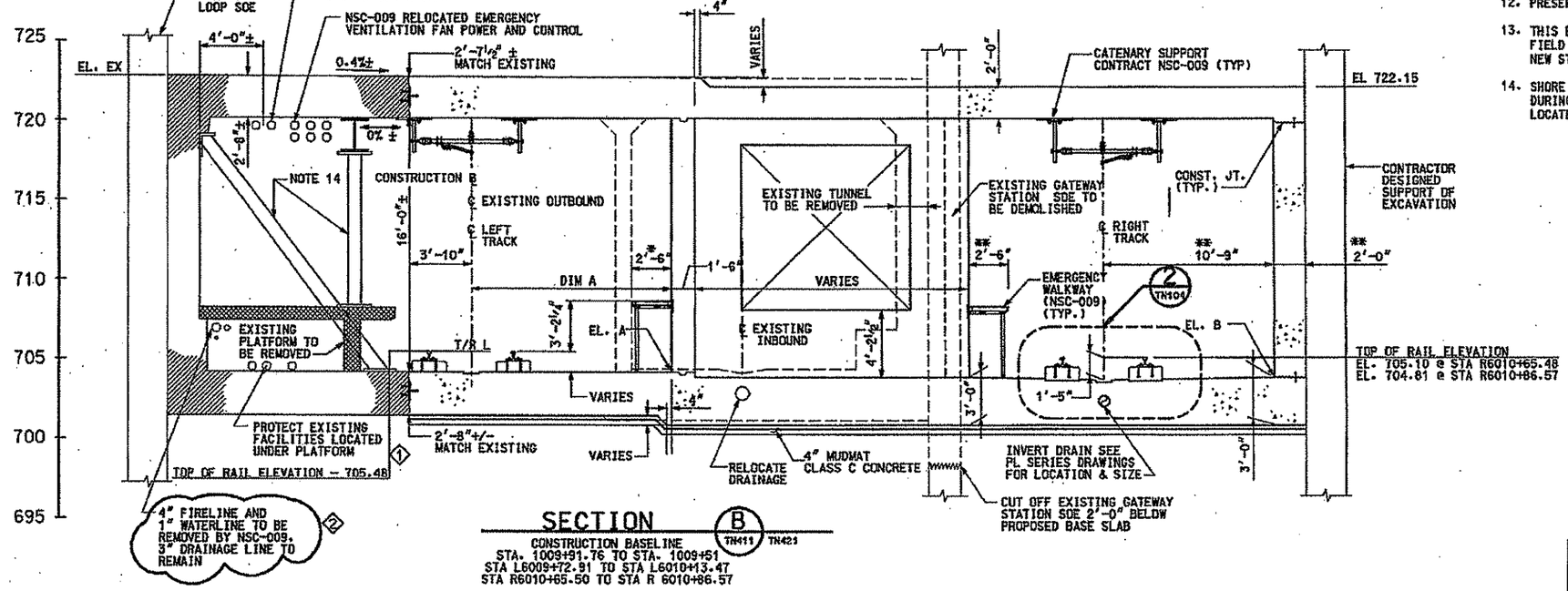

NOTES:

1. SEE DRAWING TN100 AND TN101 FOR GENERAL NOTES.
2. ALL STATIONS GIVEN ARE ALONG LEFT TRACK UNLESS OTHERWISE NOTED.
3. ALL DIMENSIONS ARE PERPENDICULAR TO CORRESPONDING TRACK UNLESS OTHERWISE NOTED.
4. SEE DRAWING TN104 FOR DETAILS OF BASE SLAB PROFILE.
5. SEE DRAWING TN102 FOR CONSTRUCTION JOINT AND WATERSTOP DETAIL.
6. SEE WP SERIES DRAWINGS FOR DETAILS OF WATERPROOFING SYSTEM.
7. SEE TN700 SERIES DRAWINGS FOR SUPPORT OF EXCAVATION DETAILS.
8. BASE SLAB AND ROOF SLAB THICKNESS SHALL BE ADJUSTED TO MATCH THE EXISTING STRUCTURE.
9. SEE DEMOLITION PLAN OF EXISTING GATEWAY STATION DRAWING TN405 AND TN406 FOR ADDITIONAL NOTES ON CONCRETE REMOVAL.
10. CONSTRUCTION BASELINE IS A TANGENT SEGMENT OF THE 1981 TRACK CENTERLINE. THE PROPOSED LEFT TRACK PC STA. 6010+00 AT THE START OF THE LEFT TRACK, COINCIDES WITH THE 1981 STA. 1009+64.67 UPSTATION FOR THE CONSTRUCTION BASELINE 1981 INBOUND TRACK CENTERLINE IS TO THE EAST SEE DRAWING TN411.
11. VERIFY EXISTING CONCRETE ELEVATIONS AND LOCATIONS AT THE BEGINNING OF WORK.
12. PRESERVE AND PROTECT ROMI BEARDON ARTWORK MURAL.
13. THIS ELEVATION VARIES AND MUST BE ESTABLISHED IN THE FIELD PRIOR TO FABRICATION AND INSTALLATION OF THE NEW STRUCTURE.
14. SHORE AND LATERALLY SUPPORT THE EXISTING STRUCTURE DURING CONSTRUCTION. PROTECT EXISTING FACILITIES LOCATED UNDER PLATFORM, TUNNEL ROOF AND LOOP WALLS. (1)

TABLE OF DIMENSIONS (SECTION A)

STA.	LINE	DIM A	ELEV.B
L6009+40.33	–	8'-0⅜"	704.02
L6009+72.91	–	7'-11¾"	703.77

* DIMENSION IS PERPENDICULAR TO LEFT TRACK
** DIMENSION IS PERPENDICULAR TO RIGHT TRACK
C.J. DENOTES CONSTRUCTION JOINT

TABLE OF DIMENSIONS (SECTION B)

STA.	LINE	DIM A	ELEV A	ELEV B
L6009+72.91	–	9'-5⅛"	704.15	703.77
L6010+13.47	–	9'-10¾"	704.15	703.48

* DIMENSION IS PERPENDICULAR TO LEFT TRACK
C.J. DENOTES CONSTRUCTION JOINT

NO.	DATE	DESCRIPTION
2	4/03/08	ADDENDUM 7 – DRAWING MODIFIED
1	3/27/08	ADDENDUM 6 – DRAWING MODIFIED

REVISIONS

THE PREPARATION OF THIS DOCUMENT HAS BEEN FINANCED IN PART THROUGH A GRANT FROM THE FEDERAL TRANSIT ADMINISTRATION, U.S. DEPARTMENT OF TRANSPORTATION, UNDER THE URBAN MASS TRANSPORTATION ACT OF 1964, AS AMENDED, FOR THE PORT AUTHORITY OF ALLEGHENY COUNTY, PENNSYLVANIA.

COMMONWEALTH OF PENNSYLVANIA REGISTERED PROFESSIONAL ENGINEER PETER DENNIS MAURITZ 049260

SIGNATURE

DMJM HARRIS | AECOM
FOUR GATEWAY CENTER
20TH FLOOR
PITTSBURGH, PA. 15222

APPROVED — DATE 4/3/08

DESIGNED	MM
DRAWN	NPD
CHECKED	WBT
IN CHARGE	DPH
DATE	FEB 1, 2008
SCALE	1/4"=1'-0"

PORT AUTHORITY OF ALLEGHENY COUNTY
PITTSBURGH PENNSYLVANIA

NORTH SHORE CONNECTOR
GATEWAY STATION SHELL
CROSS SECTION AT TIE-IN TO EXISTING
STA. 1009+51 TO STA. 1010+24

PORT AUTHORITY

CONTRACT NO. NSC-004R
DWG. NO. TN442 SHT. 104

TABLE OF DIMENSIONS

STA.	LINE	ELEV A
L6010+13.47	–	704.15
L6010+17.24	CJ	704.15
L6010+50.00	–	704.03

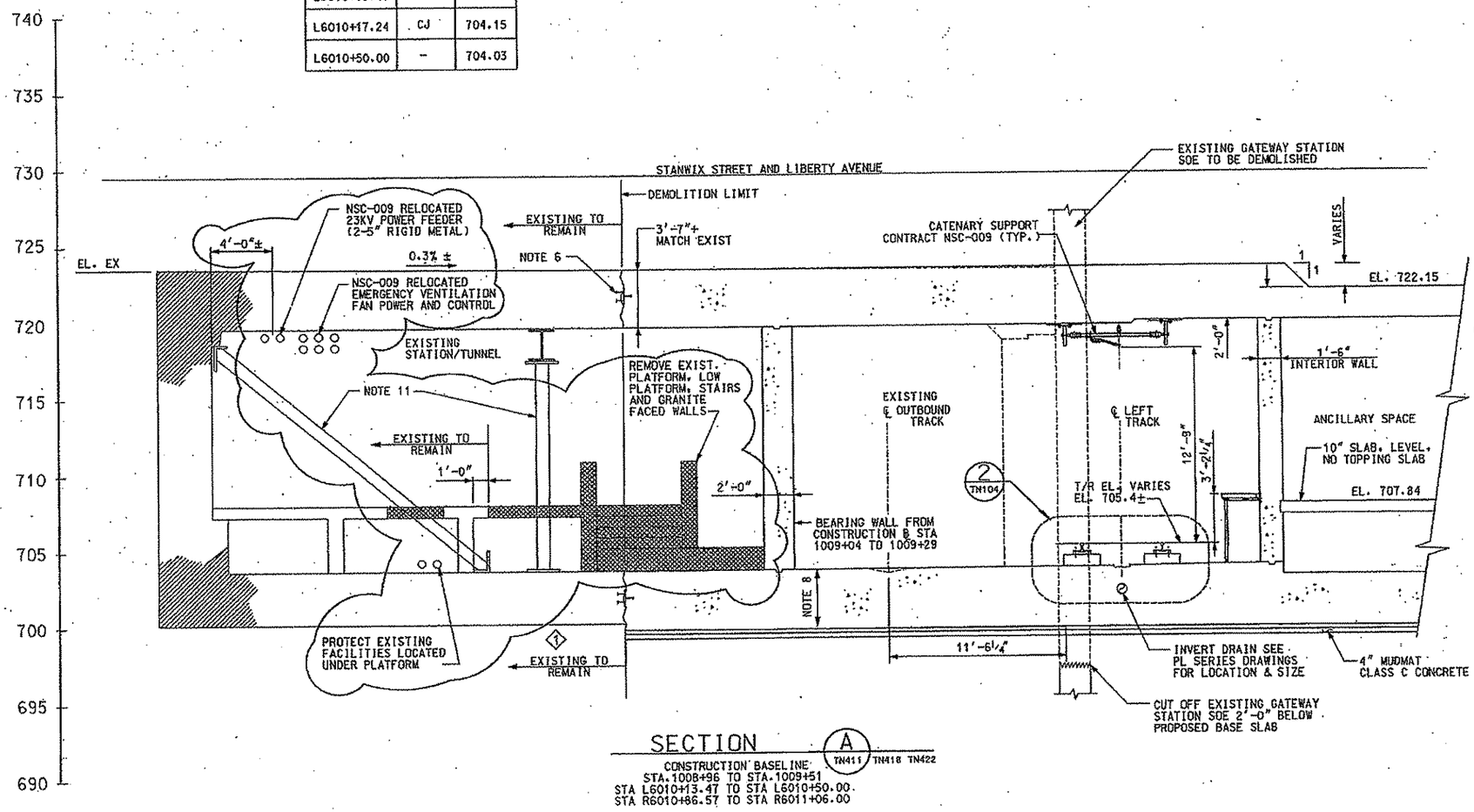

SECTION A TN411 TN418 TN422

CONSTRUCTION BASELINE
STA.1008+96 TO STA.1009+51
STA L6010+13.47 TO STA L6010+50.00
STA R6010+86.57 TO STA R6011+06.00

NOTES:

1. SEE DRAWING TN100 AND TN101 FOR GENERAL NOTES.
2. ALL STATIONS GIVEN ARE ALONG LEFT TRACK UNLESS OTHERWISE NOTED.
3. ALL DIMENSIONS ARE PERPENDICULAR TO CORRESPONDING TRACK UNLESS OTHERWISE NOTED.
4. SEE DRAWING TN104 FOR DETAILS OF BASE SLAB PROFILE.
5. SEE DRAWING TN102 FOR CONSTRUCTION JOINT AND WATERSTOP DETAIL.
6. SEE WP SERIES DRAWINGS FOR DETAILS OF WATERPROOFING SYSTEM.
7. SEE TN700 SERIES DRAWINGS FOR SUPPORT OF EXCAVATION DETAILS.
8. BASESLAB THICKNESS OF 3'-9" IS AT CORNER AT RIGHT TRACK ONLY. BASESLAB AT LEFT TRACK WILL BE THICKER ACCORDING TO LEFT TRACK PROFILE.
9. SEE DEMOLITION PLAN OF EXISTING GATEWAY STATION DRAWING TN405 AND TN406 FOR ADDITIONAL NOTES ON CONCRETE REMOVAL.
10. VERIFY EXISTING CONCRETE ELEVATIONS AND LOCATIONS AT THE BEGINNING OF WORK.
11. SHORE AND LATERALLY SUPPORT THE EXISTING STRUCTURE DURING CONSTRUCTION. CUT ACCESS HOLE IN PLATFORM AS REQUIRED FOR STRUT PLACEMENT. PROTECT EXISTING FACILITIES LOCATED UNDER PLATFORM. PLACE AND SECURE PERMENANT COVER FLUSH OVER HOLES AFTER STRUT REMOVAL. 1

NO.	DATE	DESCRIPTION
1	3/27/08	ADDENDUM 6 – DRAWING MODIFIED

REVISIONS

THE PREPARATION OF THIS DOCUMENT HAS BEEN FINANCED IN PART THROUGH A GRANT FROM THE FEDERAL TRANSIT ADMINISTRATION, U.S. DEPARTMENT OF TRANSPORTATION, UNDER THE URBAN MASS TRANSPORTATION ACT OF 1964, AS AMENDED, FOR THE PORT AUTHORITY OF ALLEGHENY COUNTY, PENNSYLVANIA.

COMMONWEALTH OF PENNSYLVANIA REGISTERED PROFESSIONAL PETER DENNIS MAURITZ ENGINEER

SIGNATURE

DMJM HARRIS | AECOM
FOUR GATEWAY CENTER
20TH FLOOR
PITTSBURGH, PA. 15222

APPROVED 3/27/08 DATE

DESIGNED	RHG
DRAWN	NPD
CHECKED	WBT
IN CHARGE	DPH
DATE	FEB 1, 2008
SCALE	1/4"=1'-0" (4' 2' 0 4')

PORT AUTHORITY OF ALLEGHENY COUNTY
PITTSBURGH PENNSYLVANIA

NORTH SHORE CONNECTOR
GATEWAY STATION SHELL
CROSS SECTION AT TIE-IN TO EXISTING
STA. 1008+96 TO STA. 1009+51

PORT AUTHORITY

CONTRACT NO. NSC-004R
DWG. NO. TN443 SHT. 105

$DATE$ $TIME$
$FILE$

TABLE OF DIMENSIONS

STA.	LINE	DIM A	DIM B	DIM C	DIM D	ELEV A	ELEV B	ELEV C
L6010+50.00	–	–	40'-6 1/4"	19'-0 7/8"	17'-9 1/8"	704.03	703.14	–
L6010+64.00	–	45'-4 7/8"	43'-5 7/8"	21'-8 7/8"	20'-8 3/8"	703.91	703.01	702.38

C.J. DENOTES CONSTRUCTION JOINT

NOTES:

1. SEE DRAWING TN100 AND TN101 FOR GENERAL NOTES.
2. ALL STATIONS GIVEN ARE ALONG LEFT TRACK UNLESS OTHERWISE NOTED.
3. ALL DIMENSIONS ARE PERPENDICULAR TO CORRESPONDING TRACK UNLESS OTHERWISE NOTED.
4. SEE DRAWING TN104 FOR DETAILS OF BASE SLAB PROFILE.
5. SEE DRAWING TN102 FOR CONSTRUCTION JOINT AND WATERSTOP DETAIL.
6. SEE WP SERIES DRAWINGS FOR DETAILS OF WATERPROOFING SYSTEM.
7. SEE TN700 SERIES DRAWINGS FOR SUPPORT OF EXCAVATION DETAILS.
8. THE SECTION IS CUT RADIALLY FROM THE RIGHT TRACK CENTER LOOKING UP-STATION.
9. BASESLAB THICKNESS OF 3'-9" IS AT CORNER AT RIGHT TRACK ONLY. BASESLAB AT LEFT TRACK WILL BE THICKER ACCORDING TO LEFT TRACK PROFILE.
10. SEE DEMOLITION PLAN OF EXISTING GATEWAY STATION DRAWING TN405 FOR ADDITIONAL NOTES ON CONCRETE REMOVAL.

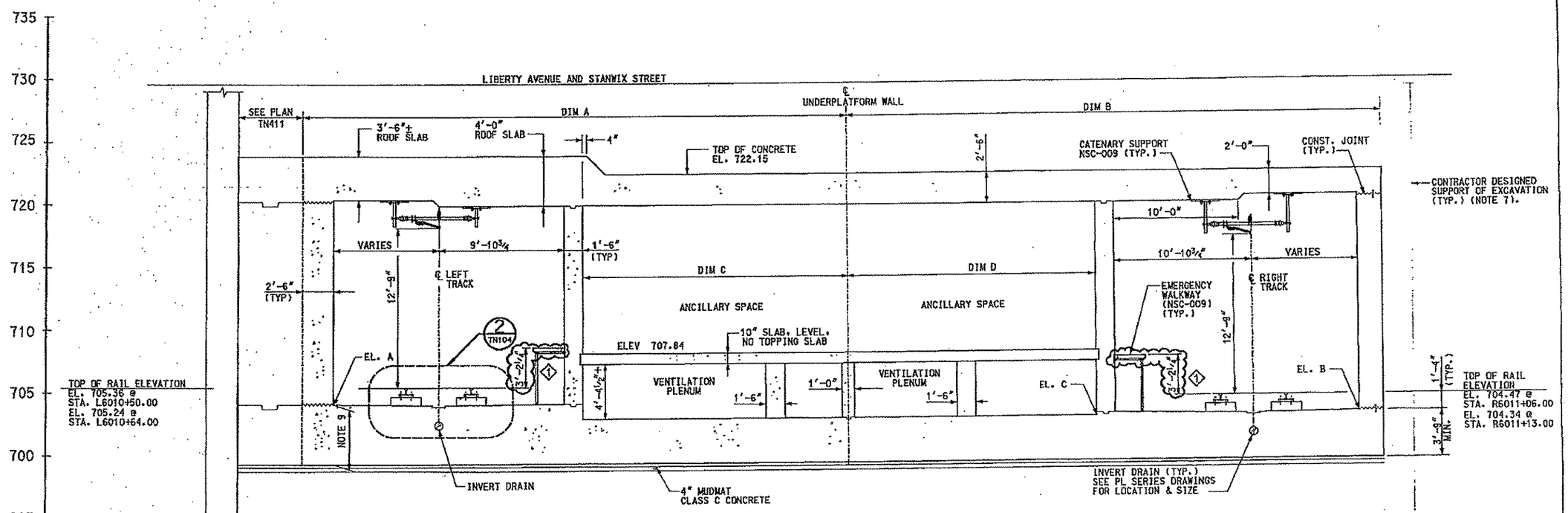

SECTION A

TN411 TN415 TN422

GATEWAY CENTER STATION
STA. L6010+50 TO STA. 6010+64
STA. R6011+06 TO STA. 6011+13

NO.	DATE	DESCRIPTION
1	3/14/08	ADDENDUM 3 – DRAWING MODIFIED

REVISIONS

THE PREPARATION OF THIS DOCUMENT HAS BEEN FINANCED IN PART THROUGH A GRANT FROM THE FEDERAL TRANSIT ADMINISTRATION, U.S. DEPARTMENT OF TRANSPORTATION, UNDER THE URBAN MASS TRANSPORTATION ACT OF 1964, AS AMENDED, FOR THE PORT AUTHORITY OF ALLEGHENY COUNTY, PENNSYLVANIA.

COMMONWEALTH OF PENNSYLVANIA REGISTERED PROFESSIONAL PETER DENNIS HAURITZ ENGINEER

SIGNATURE

DMJM HARRIS | AECOM
FOUR GATEWAY CENTER
20TH FLOOR
PITTSBURGH, PA. 15222

APPROVED 3/14/08 DATE

DESIGNED	NM
DRAWN	NPO
CHECKED	WBT
IN CHARGE	DPH
DATE	FEB 1, 2008
SCALE	1/4"=1'-0"

PORT AUTHORITY OF ALLEGHENY COUNTY
PITTSBURGH PENNSYLVANIA

NORTH SHORE CONNECTOR
GATEWAY STATION SHELL
CROSS SECTION
STA L6010+50 TO STA L6010+64

Port Authority

CONTRACT NO. NSC-004R
DWG. NO. TN444 SHT. 106

TABLE OF DIMENSIONS

STA.	LINE	DIM A	DIM B	DIM C	DIM D	ELEV A	ELEV B	ELEV C
L6010+64.00	–	45'-4 7/8"	43'-5 7/8"	21'-8 7/8"	20'-8 3/8"	703.91	703.01	702.38
L6010+67.11	C.J.	46'-7 3/4"*	43'-8 5/8"*	22'-6 5/8"*	20'-9 3/8"*	703.88	703.06	702.41
L6011+19.98	C.J.	47'-1 1/4"*	50'-4 1/8"*	24'-8 7/8"*	27'-7"*	703.08	702.45	701.73

C.J. DENOTES CONSTRUCTION JOINT

* DIMENSION ALONG CONSTRUCTION JOINT

NOTES:

1. SEE DRAWING TN100 AND TN101 FOR GENERAL NOTES.
2. ALL STATIONS GIVEN ARE ALONG LEFT TRACK UNLESS OTHERWISE NOTED.
3. ALL DIMENSIONS ARE PERPENDICULAR TO CORRESPONDING TRACK UNLESS OTHERWISE NOTED.
4. SEE DRAWING TN104 FOR DETAILS OF BASE SLAB PROFILE.
5. SEE DRAWING TN102 FOR CONSTRUCTION JOINT AND WATERSTOP DETAIL.
6. SEE WP SERIES DRAWINGS FOR DETAILS OF WATERPROOFING SYSTEM.
7. SEE TN700 SERIES DRAWINGS FOR SUPPORT OF EXCAVATION DETAILS.
8. THE SECTION IS CUT RADIALLY FROM THE RIGHT TRACK CENTER LOOKING UP-STATION.
9. BASESLAB THICKNESS OF 3'-9" IS AT CORNER AT RIGHT TRACK ONLY. BASESLAB AT LEFT TRACK WILL BE THICKER ACCORDING TO LEFT TRACK PROFILE.

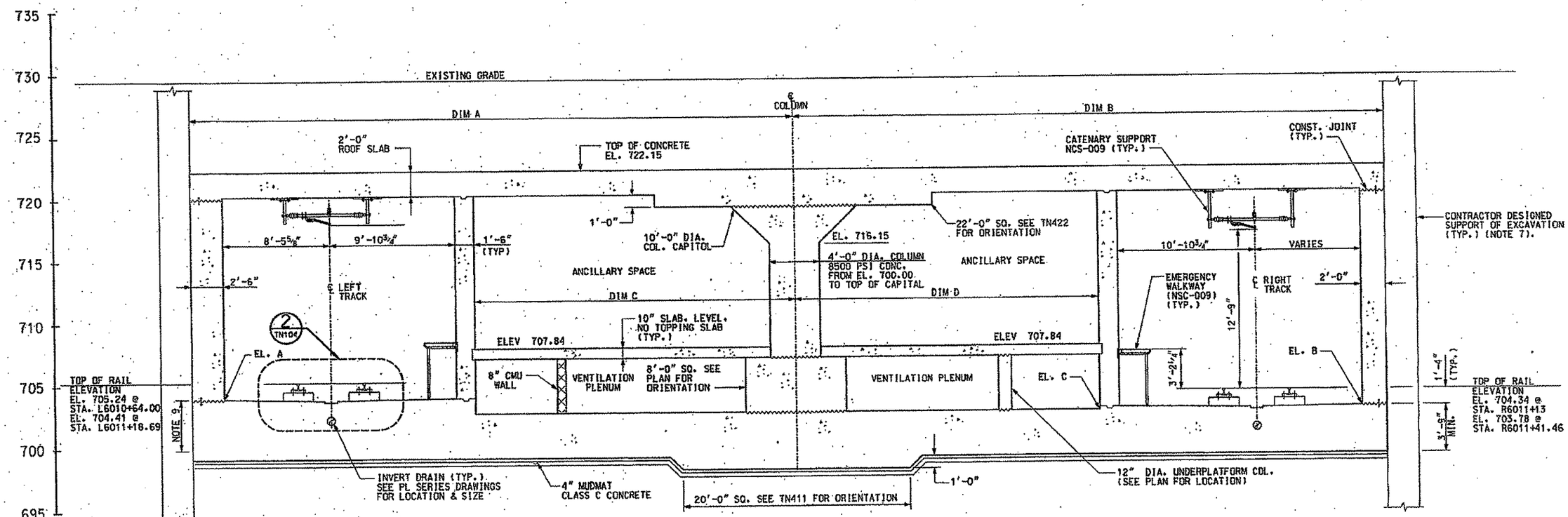

SECTION A TN411 TN418 TN422

GATEWAY CENTER STATION
STA. L6010+64 TO STA. L6011+18.69
STA. R6011+13 TO STA. R6011+41.46

NO.	DATE	DESCRIPTION

REVISIONS

THE PREPARATION OF THIS DOCUMENT HAS BEEN FINANCED IN PART THROUGH A GRANT FROM THE FEDERAL TRANSIT ADMINISTRATION, U.S. DEPARTMENT OF TRANSPORTATION, UNDER THE URBAN MASS TRANSPORTATION ACT OF 1964, AS AMENDED. FOR THE PORT AUTHORITY OF ALLEGHENY COUNTY, PENNSYLVANIA.

REGISTERED PROFESSIONAL PETER DENNIS MARRITZ ENGINEER PENNSYLVANIA

SIGNATURE

DMJM HARRIS | AECOM
FOUR GATEWAY CENTER
20TH FLOOR
PITTSBURGH, PA. 15222

APPROVED DATE 2/1/08

DESIGNED	MM
DRAWN	NPD
CHECKED	WST
IN CHARGE	DPH
DATE	FEB 1, 2008
SCALE	1/4"=1'-0" (4' 2' 0 4')

PORT AUTHORITY OF ALLEGHENY COUNTY
PITTSBURGH PENNSYLVANIA

NORTH SHORE CONNECTOR
GATEWAY STATION SHELL
CROSS SECTION
STA L6010+64 TO STA L6011+18.69

Port Authority

CONTRACT NO. NSC-004R

DWG. NO. TN445 SHT. 107

TABLE OF DIMENSIONS
(SEE NOTE 3)

STA.	LINE	ELEV A	ELEV B	ELEV C
L6011+19.98	C.J.	703.08	702.45	701.73
L6011+62.92	C.J.	702.20	701.78	701.22
L6011+75.03	-	701.96	701.72	701.15

C.J. DENOTES CONSTRUCTION JOINT

NOTES:

1. SEE DRAWING TN100 AND TN101 FOR GENERAL NOTES.
2. ALL STATIONS GIVEN ARE ALONG LEFT TRACK UNLESS OTHERWISE NOTED.
3. ALL DIMENSIONS ARE PERPENDICULAR TO CORRESPONDING TRACK UNLESS OTHERWISE NOTED.
4. SEE DRAWING TN104 FOR DETAILS OF BASE SLAB PROFILE.
5. SEE DRAWING TN102 FOR CONSTRUCTION JOINT AND WATERSTOP DETAIL.
6. SEE WP SERIES DRAWINGS FOR DETAILS OF WATERPROOFING SYSTEM.
7. SEE TN700 SERIES DRAWINGS FOR SUPPORT OF EXCAVATION DETAILS.
8. THE SECTION IS CUT RADIALLY FROM THE RIGHT TRACK CENTER LOOKING UP-STATION.
9. REFER TO DRAWINGS TN581-590 FOR CONDUIT CONFIGURATIONS.

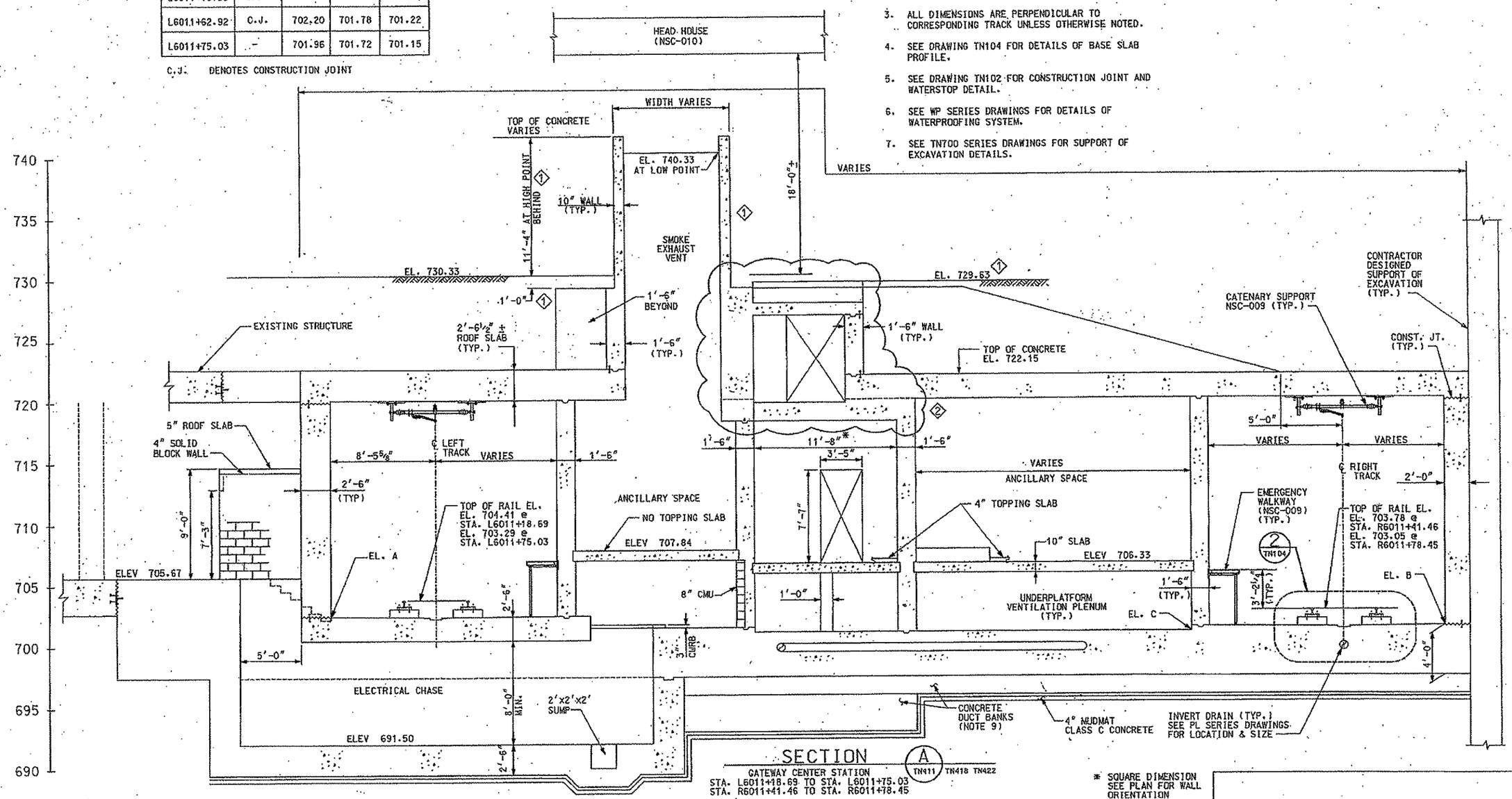

SECTION A

TN411 TN418 TN422

GATEWAY CENTER STATION
STA. L6011+18.69 TO STA. L6011+75.03
STA. R6011+41.46 TO STA. R6011+78.45

* SQUARE DIMENSION SEE PLAN FOR WALL ORIENTATION

NO.	DATE	DESCRIPTION
2	3/27/08	ADDENDUM 6 - DRAWING MODIFIED
1	3/21/08	ADDENDUM 5 - DRAWING MODIFIED

REVISIONS

THE PREPARATION OF THIS DOCUMENT HAS BEEN FINANCED IN PART THROUGH A GRANT FROM THE FEDERAL TRANSIT ADMINISTRATION, U.S. DEPARTMENT OF TRANSPORTATION, UNDER THE URBAN MASS TRANSPORTATION ACT OF 1964, AS AMENDED, FOR THE PORT AUTHORITY OF ALLEGHENY COUNTY, PENNSYLVANIA.

COMMONWEALTH OF PENNSYLVANIA REGISTERED PROFESSIONAL PETER DENNIS MAURITZ 076290-E

SIGNATURE

DMJM HARRIS | AECOM
FOUR GATEWAY CENTER
20TH FLOOR
PITTSBURGH, PA. 15222

APPROVED 3/22/08 DATE

DESIGNED	MM
DRAWN	NPD
CHECKED	WBT
IN CHARGE	DPH
DATE	FEB 1, 2008
SCALE	1/4"=1'-0"

PORT AUTHORITY OF ALLEGHENY COUNTY
PITTSBURGH PENNSYLVANIA

NORTH SHORE CONNECTOR
GATEWAY STATION SHELL
CROSS SECTION
STA L6011+18.69 TO STA L6011+75

PORT AUTHORITY

CONTRACT NO. NSC-004R
DWG. NO. TN446 SHT. 108

TABLE OF DIMENSIONS
(SEE NOTE 3)

STA.	LINE	A	B	C	D	E	EL. A	EL. B
L6011+75.03	–	34'-9 3/8"	34'-9 3/8"	0'-5" *	–	–	701.96	701.84
L6012+03.92	C.J.	32'-4 1/2"	32'-4 1/2"	0'-8 5/8" *	1'-11 3/8"	0'-4 7/8"	701.38	701.29
L6012+25.00	–	30'-7 1/2"	30'-7 1/2"	0'-11 1/4" *	2'-8 5/8"	1'-2 1/8"	700.96	700.88

C.J. DENOTES CONSTRUCTION JOINT

* PERPENDICULAR TO LEFT TRACK

NOTES:

1. SEE DRAWING TN100 AND TN101 FOR GENERAL NOTES.
2. ALL STATIONS GIVEN ARE ALONG LEFT TRACK UNLESS OTHERWISE NOTED.
3. ALL DIMENSIONS ARE PERPENDICULAR TO CORRESPONDING TRACK UNLESS OTHERWISE NOTED.
4. SEE DRAWING TN104 FOR DETAILS OF BASE SLAB PROFILE.
5. SEE DRAWING TN102 FOR CONSTRUCTION JOINT AND WATERSTOP DETAIL.
6. SEE WP SERIES DRAWINGS FOR DETAILS OF WATERPROOFING SYSTEM.
7. SEE TN700 SERIES DRAWINGS FOR SUPPORT OF EXCAVATION DETAILS.
8. THE SECTION IS CUT SQUARE TO THE RIDGE LINE LOOKING UP-STATION.
9. BASESLAB THICKNESS OF 4'-0" IS AT CORNER AT RIGHT TRACK ONLY. BASESLAB AT LEFT TRACK WILL BE THICKER ACCORDING TO LEFT TRACK PROFILE (WHERE NO UNDERPLENUMS ARE PRESENT).
10. SEE TN105 FOR 10" AND 12" WALL DETAILS.

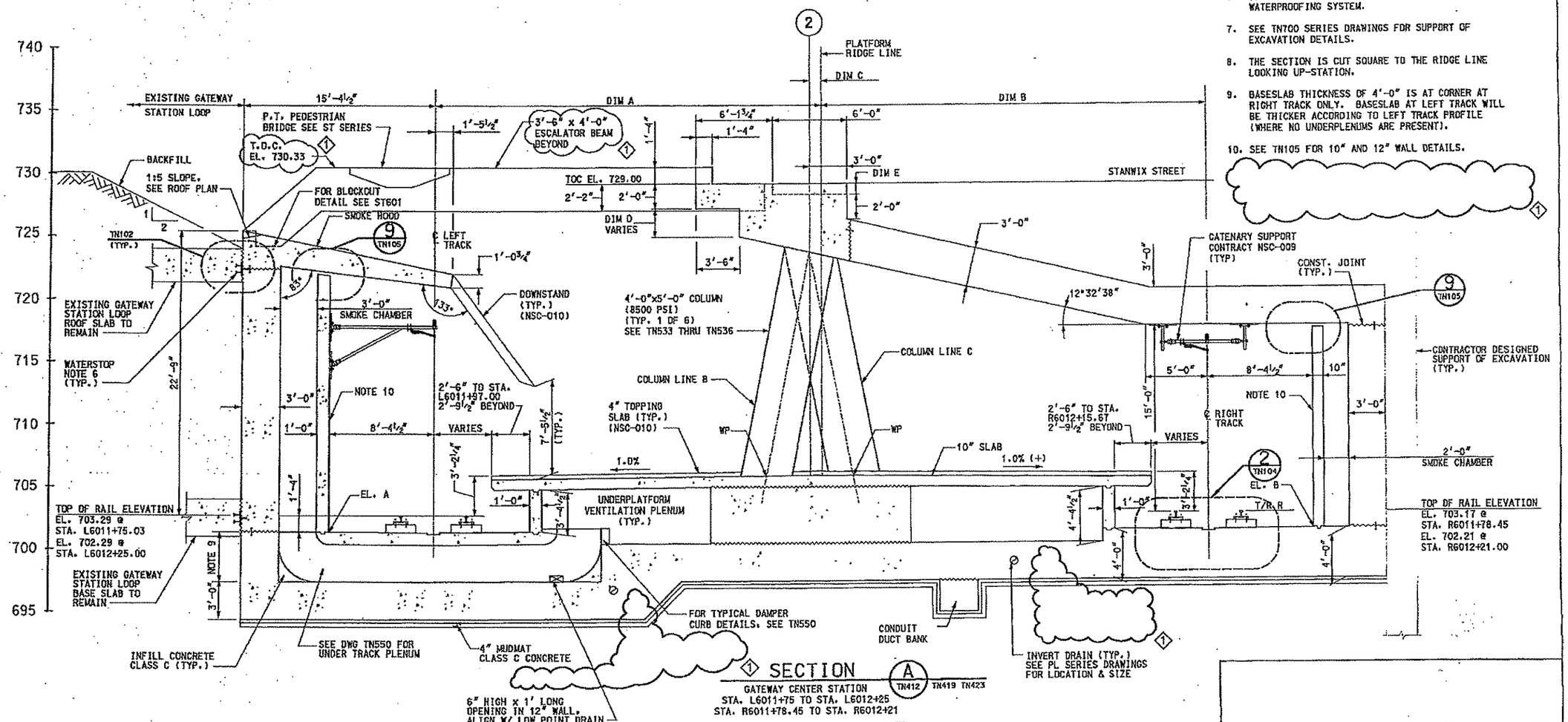

SECTION A

GATEWAY CENTER STATION
STA. L6011+75 TO STA. L6012+25
STA. R6011+78.45 TO STA. R6012+21

TN412 TN419 TN423

NO.	DATE	DESCRIPTION
1	3/14/08	ADDENDUM 3 – DRAWING MODIFIED

REVISIONS

THE PREPARATION OF THIS DOCUMENT HAS BEEN FINANCED IN PART THROUGH A GRANT FROM THE FEDERAL TRANSIT ADMINISTRATION, U.S. DEPARTMENT OF TRANSPORTATION, UNDER THE URBAN MASS TRANSPORTATION ACT OF 1964, AS AMENDED, FOR THE PORT AUTHORITY OF ALLEGHENY COUNTY, PENNSYLVANIA.

SIGNATURE

DMJM HARRIS | AECOM
FOUR GATEWAY CENTER
20TH FLOOR
PITTSBURGH, PA. 15222

APPROVED 3/14/08 DATE

DESIGNED	NM
DRAWN	NPD
CHECKED	MBT
IN CHARGE	DPH
DATE	FEB 1, 2008
SCALE	1/4"=1'-0"

PORT AUTHORITY OF ALLEGHENY COUNTY
PITTSBURGH PENNSYLVANIA

NORTH SHORE CONNECTOR
GATEWAY STATION SHELL
CROSS SECTION
STA. L6011+75 TO STA. L6012+25

Port Authority

CONTRACT NO. NSC-004R
DWG. NO. TN448 SHT. 109

TABLE OF DIMENSIONS
(SEE NOTE 3)

STA.	LINE	A	B	C *	D	E	EL. A	EL. B
L6012+25.00	–	30'-7½"	30'-7½"	0'-11¼"	2'-8⅝"	1'-2⅛"	700.96	700.88
L6012+31.92	C.J.	30'-0⅝"	30'-0⅝"	1'-0⅛"	2'-11⅝"	1'-5⅛"	700.82	700.74
L6012+61.92	C.J.	27'-6¾"	27'-6¾"	1'-4"	4'-0¾"	2'-6¼"	700.22	700.15
L6012+75.00	–	26'-5⅝"	26'-5⅝"	1'-5⅝"	–	–	699.96	699.89

C.J. DENOTES CONSTRUCTION JOINT

* PERPENDICULAR TO LEFT TRACK

NOTES:

1. SEE DRAWING TN100 AND TN101 FOR GENERAL NOTES.
2. ALL STATIONS GIVEN ARE ALONG LEFT TRACK UNLESS OTHERWISE NOTED.
3. ALL DIMENSIONS ARE PERPENDICULAR TO CORRESPONDING TRACK UNLESS OTHERWISE NOTED.
4. SEE DRAWING TN104 FOR DETAILS OF BASE SLAB PROFILE.
5. SEE DRAWING TN102 FOR CONSTRUCTION JOINT AND WATERSTOP DETAIL.
6. SEE WP SERIES DRAWINGS FOR DETAILS OF WATERPROOFING SYSTEM.
7. SEE TN700 SERIES DRAWINGS FOR SUPPORT OF EXCAVATION DETAILS.
8. THE SECTION IS CUT SQUARE TO THE RIDGE LINE LOOKING UP-STATION.
9. BASESLAB THICKNESS OF 4'-0" IS AT CORNER AT RIGHT TRACK ONLY. BASESLAB AT LEFT TRACK WILL BE THICKER ACCORDING TO LEFT TRACK PROFILE (WHERE NO UNDERPLENUMS ARE PRESENT).
10. SEE TN105 FOR 10" AND 12" WALL DETAILS.
11. BASE SLAB TIE-DOWN PERMANENT ANCHORS. ANCHOR "A" SPACED AT 10 FEET LONGITUDINALLY FROM STA. L6012+ 25 TO STA. L6012+75. ANCHOR "B" SPACED AT 30 FEET LONGITUDINALLY FROM STA. L6012+25 TO STA. L6012+55. LENGTH OF ANCHOR, 40 FEET, EMBEDDED 10 FEET MINIMUM INTO ROCK USING A CORE DIAMETER OF 12 INCHES. ANCHOR CAPACITY LOAD EQUALS 240 KIPS. THIS INFORMATION IS PROVIDED FOR THE SOLE PURPOSE OF OBTAINING COMPETITIVE BID PRICES. THE DESIGN AND INSTALLATION OF THE TIE-DOWN ANCHORS IS THE SOLE RESPONSIBILITY OF THE CONTRACTOR. 3

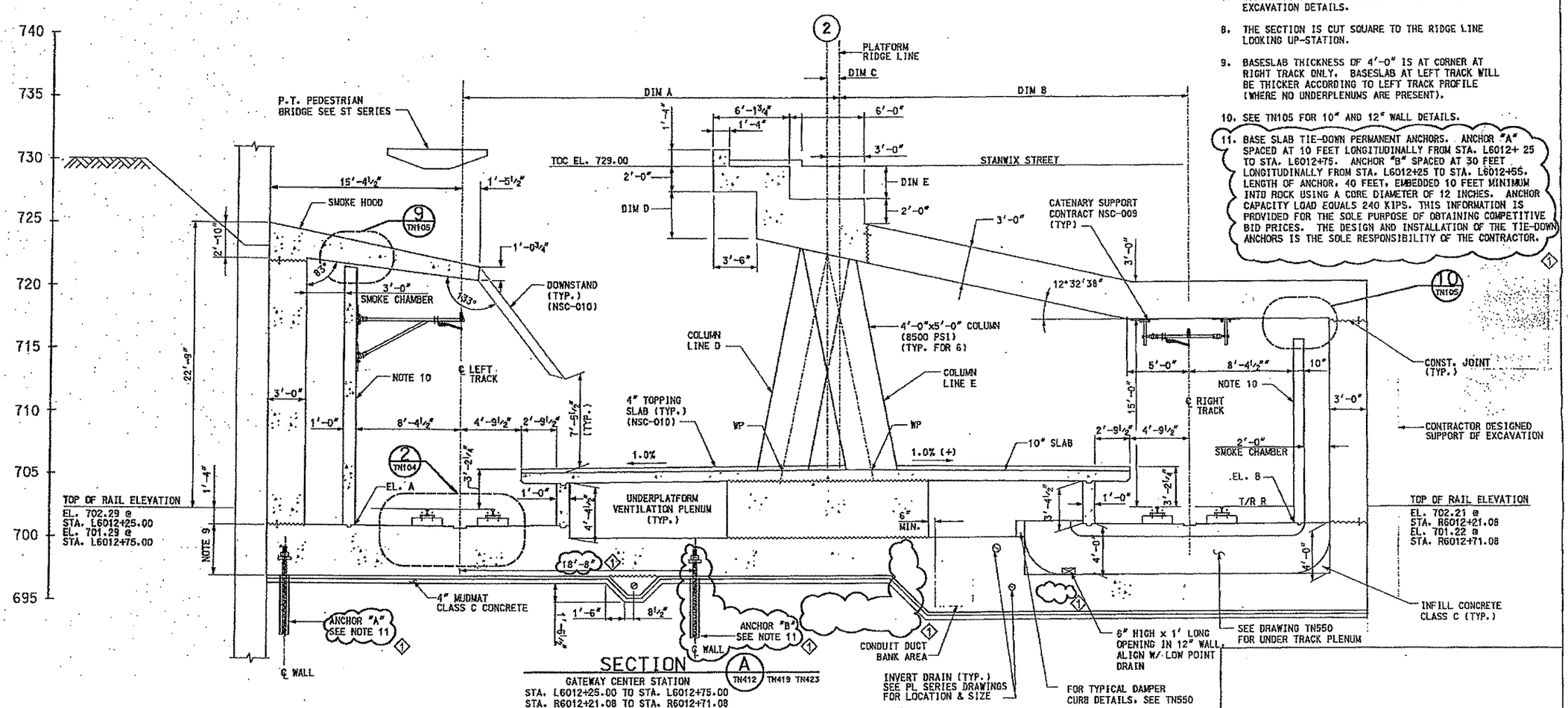

SECTION A
TN412 TN419 TN423

GATEWAY CENTER STATION
STA. L6012+25.00 TO STA. L6012+75.00
STA. R6012+21.08 TO STA. R6012+71.08

NO.	DATE	DESCRIPTION
3	3/14/08	ADDENDUM 3 – DRAWING MODIFIED

REVISIONS

THE PREPARATION OF THIS DOCUMENT HAS BEEN FINANCED IN PART THROUGH A GRANT FROM THE FEDERAL TRANSIT ADMINISTRATION, U.S. DEPARTMENT OF TRANSPORTATION, UNDER THE URBAN MASS TRANSPORTATION ACT OF 1964, AS AMENDED, FOR THE PORT AUTHORITY OF ALLEGHENY COUNTY, PENNSYLVANIA.

COMMONWEALTH OF PENNSYLVANIA REGISTERED PROFESSIONAL ENGINEER PETER DENNIS MAURITZ

SIGNATURE

DMJM HARRIS | AECOM
FOUR GATEWAY CENTER
20TH FLOOR
PITTSBURGH, PA. 15222

APPROVED 2/14/08 DATE

DESIGNED	MN
DRAWN	NPD
CHECKED	MBT
IN CHARGE	DPM
DATE	FEB 1, 2008
SCALE	1/4"=1'-0"

4' 2' 0 4'

PORT AUTHORITY OF ALLEGHENY COUNTY
PITTSBURGH PENNSYLVANIA

NORTH SHORE CONNECTOR
GATEWAY STATION SHELL
CROSS SECTION
STA L6012+25 TO STA L6012+75

Port Authority

CONTRACT NO. NSC-004R
DWG. NO. TN449 SHT. 110

TABLE OF DIMENSIONS
(SEE NOTE 3)

STA.	LINE	A	B	C *	EL. A	EL. B
L6012+75.00	–	26'-5 5/8"	26'-5 5/8"	1'-5 5/8"	699.96	699.89
L6012+91.92	C.J.	25'-0 3/4"	25'-0 3/4"	1'-7 3/4"	699.62	699.36
L6013+24.00	–	22'-4 3/4"	22'-4 3/4"	1'-11 7/8"	698.98	698.93

C.J. DENOTES CONSTRUCTION JOINT

* PERPENDICULAR TO LEFT TRACK

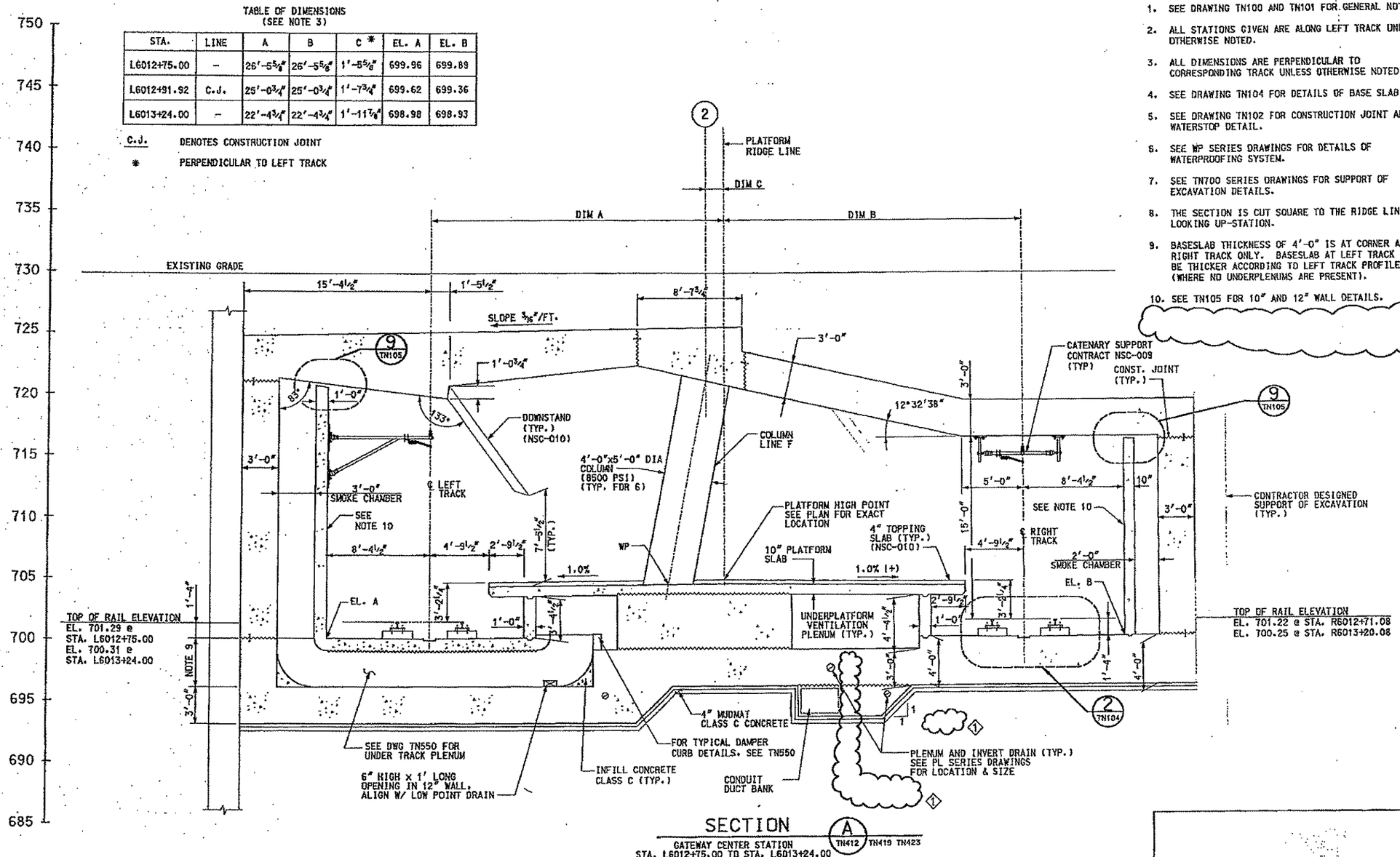

SECTION A

TN412 TN419 TN423

GATEWAY CENTER STATION
STA. L6012+75.00 TO STA. L6013+24.00
STA. R6012+71.08 TO STA. R6013+20.08

NOTES:

1. SEE DRAWING TN100 AND TN101 FOR GENERAL NOTES.
2. ALL STATIONS GIVEN ARE ALONG LEFT TRACK UNLESS OTHERWISE NOTED.
3. ALL DIMENSIONS ARE PERPENDICULAR TO CORRESPONDING TRACK UNLESS OTHERWISE NOTED.
4. SEE DRAWING TN104 FOR DETAILS OF BASE SLAB *PROFILE*.
5. SEE DRAWING TN102 FOR CONSTRUCTION JOINT AND WATERSTOP DETAIL.
6. SEE WP SERIES DRAWINGS FOR DETAILS OF WATERPROOFING SYSTEM.
7. SEE TN700 SERIES DRAWINGS FOR SUPPORT OF EXCAVATION DETAILS.
8. THE SECTION IS CUT SQUARE TO THE RIDGE LINE LOOKING UP-STATION.
9. BASESLAB THICKNESS OF 4'-0" IS AT CORNER AT RIGHT TRACK ONLY. BASESLAB AT LEFT TRACK WILL BE THICKER ACCORDING TO LEFT TRACK PROFILE (WHERE NO UNDERPLENUMS ARE PRESENT).
10. SEE TN105 FOR 10" AND 12" WALL DETAILS.

1

NO.	DATE	DESCRIPTION
1	3/14/08	ADDENDUM 3 – DRAWING MODIFIED

REVISIONS

THE PREPARATION OF THIS DOCUMENT HAS BEEN FINANCED IN PART THROUGH A GRANT FROM THE FEDERAL TRANSIT ADMINISTRATION, U.S. DEPARTMENT OF TRANSPORTATION, UNDER THE URBAN MASS TRANSPORTATION ACT OF 1964, AS AMENDED, FOR THE PORT AUTHORITY OF ALLEGHENY COUNTY, PENNSYLVANIA.

COMMONWEALTH OF PENNSYLVANIA REGISTERED PROFESSIONAL PETER DENNIS MAURITZ ENGINEER

SIGNATURE

DMJM HARRIS | AECOM
FOUR GATEWAY CENTER
20TH FLOOR
PITTSBURGH, PA. 15222

APPROVED 3/14/08 DATE

DESIGNED	MN
DRAWN	NPD
CHECKED	MBT
IN CHARGE	DPM
DATE	FEB 1, 2008
SCALE	1/4"=1'-0" (4' 2' 0 4')

PORT AUTHORITY OF ALLEGHENY COUNTY
PITTSBURGH PENNSYLVANIA

NORTH SHORE CONNECTOR
GATEWAY STATION SHELL
CROSS SECTION
STA L6012+75 TO STA L6013+24

Port Authority

CONTRACT NO. NSC-004R
DWG. NO. TN450 SHT. 111

TABLE OF DIMENSIONS
(SEE NOTE 3)

STA.	LINE	A	B	C*	D	EL. A	EL. B
L6013+24.00	–	22'-4 3/4"	22'-4 3/4"	1'-11 7/8"	6'-3 3/4"	698.98	698.92
L6013+30.92	C.J.	21'-9 7/8"	21'-9 7/8"	2'-0 3/4"	4'-11 1/8"	698.84	698.79
L6013+51.00	–	20'-1 7/8"	20'-1 7/8"	2'-3 1/4"	–	698.44	698.39

C.J. DENOTES CONSTRUCTION JOINT
* PERPENDICULAR TO LEFT TRACK

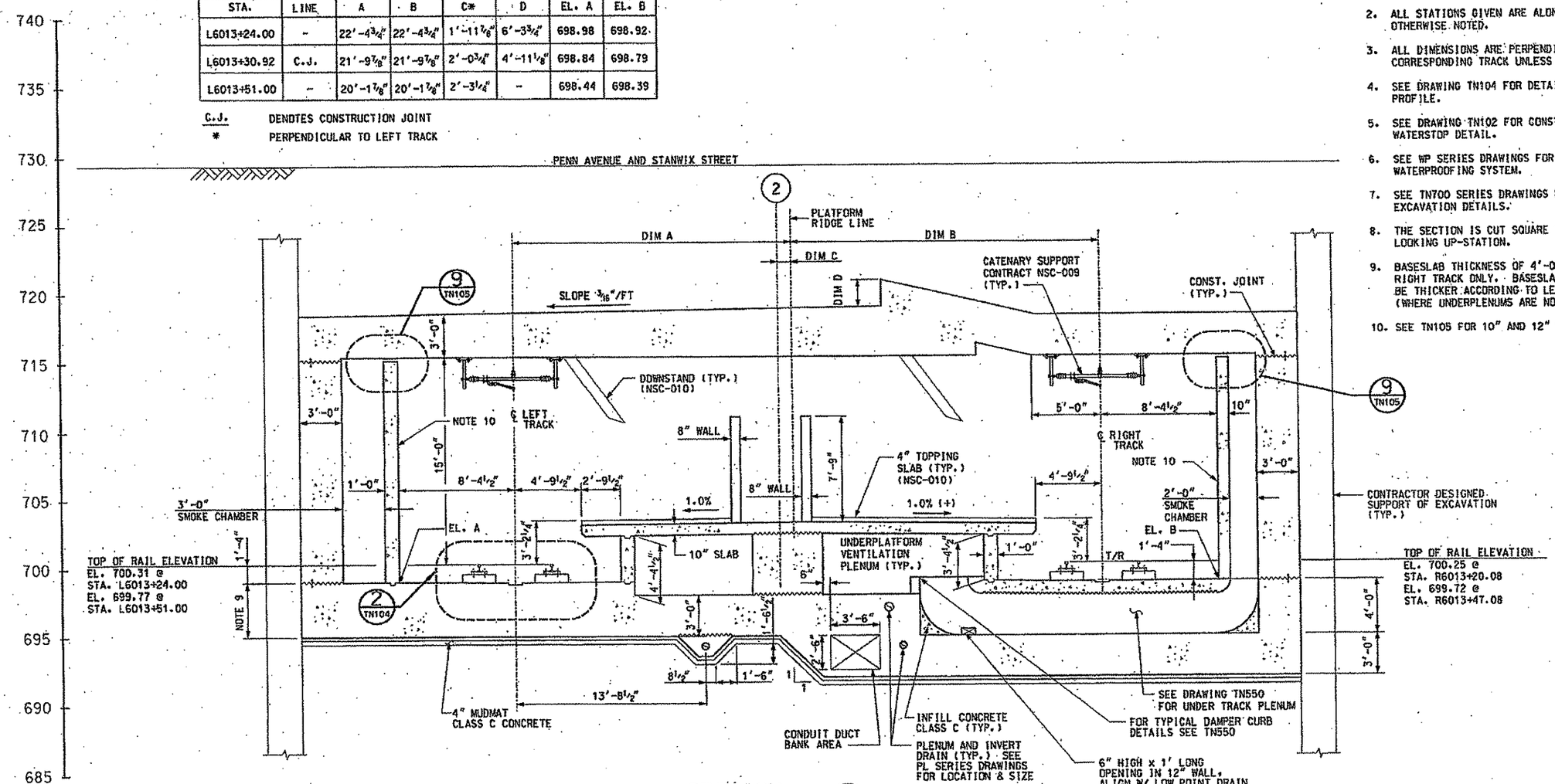

SECTION A

TN413 TN420 TN424

GATEWAY CENTER STATION
STA. L6013+24.00 TO STA. L6013+51.00
STA. R6013+20.08 TO STA. R6013+47.08

NOTES:

1. SEE DRAWING TN100 AND TN101 FOR GENERAL NOTES.
2. ALL STATIONS GIVEN ARE ALONG LEFT TRACK UNLESS OTHERWISE NOTED.
3. ALL DIMENSIONS ARE PERPENDICULAR TO CORRESPONDING TRACK UNLESS OTHERWISE NOTED.
4. SEE DRAWING TN104 FOR DETAILS OF BASE SLAB PROFILE.
5. SEE DRAWING TN102 FOR CONSTRUCTION JOINT AND WATERSTOP DETAIL.
6. SEE WP SERIES DRAWINGS FOR DETAILS OF WATERPROOFING SYSTEM.
7. SEE TN700 SERIES DRAWINGS FOR SUPPORT OF EXCAVATION DETAILS.
8. THE SECTION IS CUT SQUARE TO THE RIDGE LINE LOOKING UP-STATION.
9. BASESLAB THICKNESS OF 4'-0" IS AT CORNER AT RIGHT TRACK ONLY. BASESLAB AT LEFT TRACK WILL BE THICKER ACCORDING TO LEFT TRACK PROFILE (WHERE UNDERPLENUMS ARE NOT PRESENT).
10. SEE TN105 FOR 10" AND 12" WALL DETAILS.

NO.	DATE	DESCRIPTION

REVISIONS

THE PREPARATION OF THIS DOCUMENT HAS BEEN FINANCED IN PART THROUGH A GRANT FROM THE FEDERAL TRANSIT ADMINISTRATION, U.S. DEPARTMENT OF TRANSPORTATION, UNDER THE URBAN MASS TRANSPORTATION ACT OF 1964, AS AMENDED, FOR THE PORT AUTHORITY OF ALLEGHENY COUNTY, PENNSYLVANIA.

PETER DENNIS MARTINEZ
SIGNATURE

DMJM HARRIS | AECOM
FOUR GATEWAY CENTER
20TH FLOOR
PITTSBURGH, PA. 15222

APPROVED 2/1/08 DATE

DESIGNED	RHG
DRAWN	NPD
CHECKED	WBT
IN CHARGE	DPH
DATE	FEB 1, 2008
SCALE	1/4"=1'-0"

4' 2' 0 4'

PORT AUTHORITY OF ALLEGHENY COUNTY
PITTSBURGH PENNSYLVANIA

NORTH SHORE CONNECTOR
GATEWAY STATION SHELL
CROSS SECTION
STA L6013+24 TO STA L6013+51

Port Authority

CONTRACT NO. NSC-004R
DWG. NO. TN451 SHT. 112

$DATE$ $TIME$
$FILE$

TABLE OF DIMENSIONS
(SEE NOTE 3)

STA.	LINE	A	B	C*	EL. A	EL. B
L6013+51.00	–	20'-1 7/8"	20'-1 7/8"	2'-3 1/4"	698.44	698.39
L6013+58.92	C.J.	19'-5 7/8"	19'-5 7/8"	2'-4 1/4"	698.28	698.24
L6013+75.00	–	18'-1 7/8"	18'-1 7/8"	2'-6 3/8"	697.96	697.92

C.J. DENOTES CONSTRUCTION JOINT
* PERPENDICULAR TO LEFT TRACK

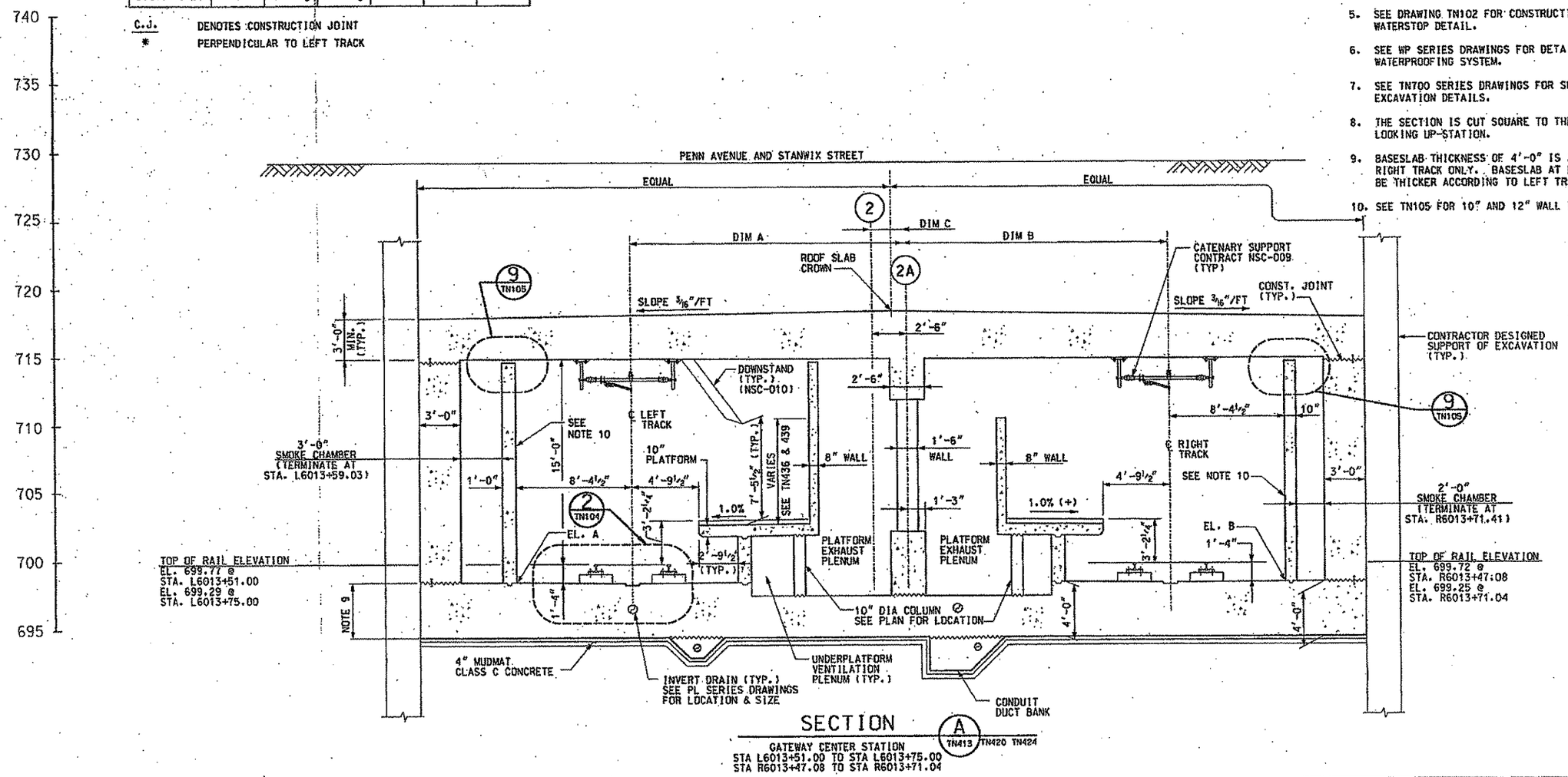

SECTION A (TN413 TN420 TN424)

GATEWAY CENTER STATION
STA L6013+51.00 TO STA L6013+75.00
STA R6013+47.08 TO STA R6013+71.04

NOTES:

1. SEE DRAWING TN100 AND TN101 FOR GENERAL NOTES.
2. ALL STATIONS GIVEN ARE ALONG LEFT TRACK UNLESS OTHERWISE NOTED.
3. ALL DIMENSIONS ARE PERPENDICULAR TO CORRESPONDING TRACK UNLESS OTHERWISE NOTED.
4. SEE DRAWING TN104 FOR DETAILS OF BASE SLAB PROFILE.
5. SEE DRAWING TN102 FOR CONSTRUCTION JOINT AND WATERSTOP DETAIL.
6. SEE WP SERIES DRAWINGS FOR DETAILS OF WATERPROOFING SYSTEM.
7. SEE TN700 SERIES DRAWINGS FOR SUPPORT OF EXCAVATION DETAILS.
8. THE SECTION IS CUT SQUARE TO THE RIDGE LINE LOOKING UP-STATION.
9. BASESLAB THICKNESS OF 4'-0" IS AT CORNER AT RIGHT TRACK ONLY. BASESLAB AT LEFT TRACK WILL BE THICKER ACCORDING TO LEFT TRACK PROFILE.
10. SEE TN105 FOR 10" AND 12" WALL DETAILS.

NO.	DATE	DESCRIPTION

REVISIONS

THE PREPARATION OF THIS DOCUMENT HAS BEEN FINANCED IN PART THROUGH A GRANT FROM THE FEDERAL TRANSIT ADMINISTRATION, U.S. DEPARTMENT OF TRANSPORTATION, UNDER THE URBAN MASS TRANSPORTATION ACT OF 1964, AS AMENDED, FOR THE PORT AUTHORITY OF ALLEGHENY COUNTY, PENNSYLVANIA.

COMMONWEALTH OF PENNSYLVANIA REGISTERED PROFESSIONAL ENGINEER PETER DENNIS NAGORTZ

SIGNATURE

DMJM HARRIS | AECOM
FOUR GATEWAY CENTER
20TH FLOOR
PITTSBURGH, PA. 15222

APPROVED — DATE 2/1/08

DESIGNED	MM
DRAWN	NPD
CHECKED	NBT
IN CHARGE	DPH
DATE	FEB 1, 2008
SCALE	1/4"=1'-0"

PORT AUTHORITY OF ALLEGHENY COUNTY
PITTSBURGH PENNSYLVANIA

NORTH SHORE CONNECTOR
GATEWAY STATION SHELL
CROSS SECTION
STA L6013+51 TO STA L6013+75

Port Authority

CONTRACT NO. NSC-004R
DWG. NO. TN452 SHT. 113

TABLE OF DIMENSIONS
(SEE NOTE 3)

STA.	LINE	A	B	C*	EL. A	EL. B
L6013+75.00	–	18'-1 7/8"	18'-1 7/8"	2'-6 3/8"	697.96	697.92
L6013+83.92	C.J.	17'-5"	17'-5"	2'-7 1/2"	697.78	697.74
L6014+12.19	C.J.	–	–	–	697.21	697.15
L6014+18.00	–	–	–	–	697.08	697.04

C.J. DENOTES CONSTRUCTION JOINT
* PERPENDICULAR TO LEFT TRACK

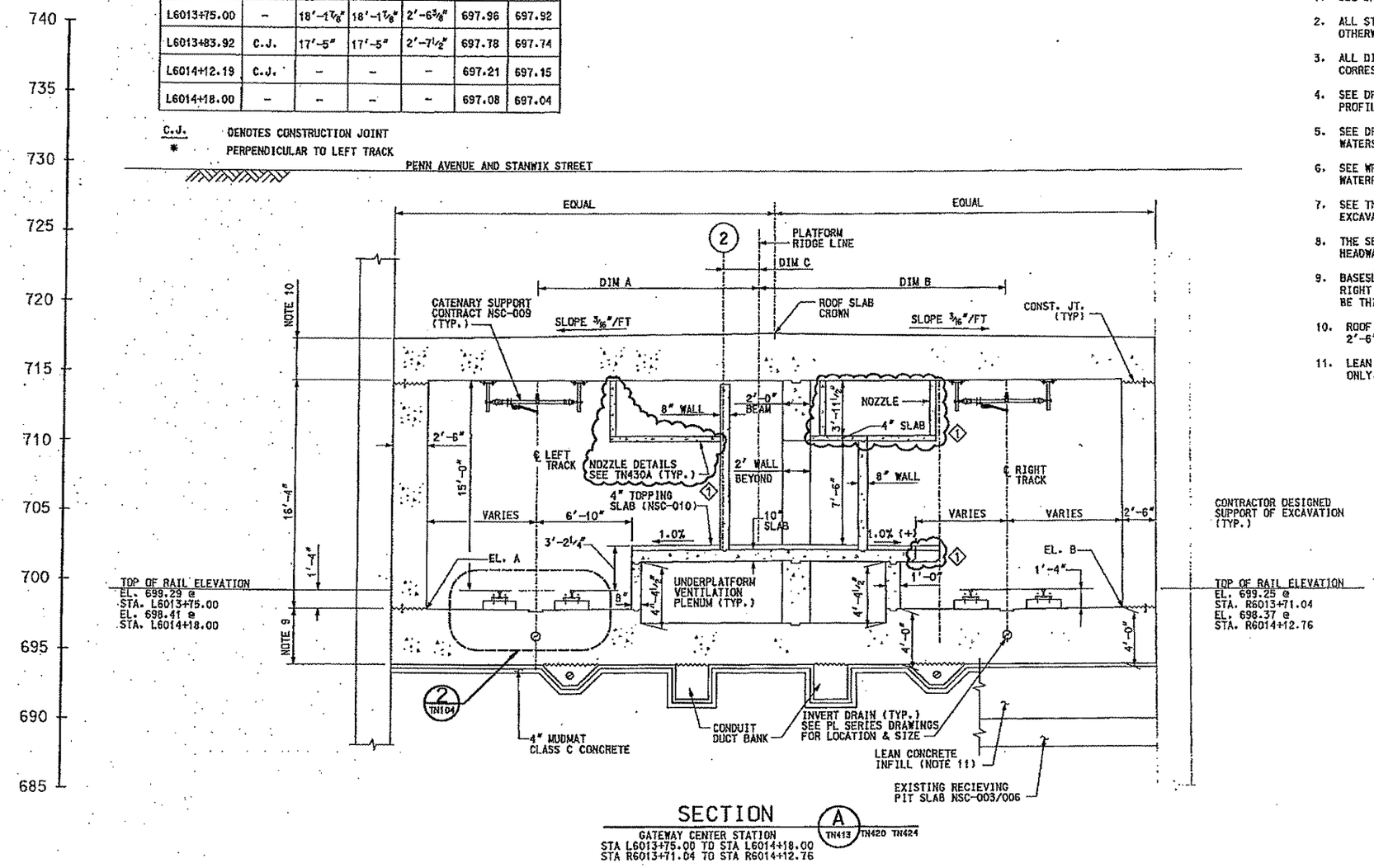

SECTION A

GATEWAY CENTER STATION
STA L6013+75.00 TO STA L6014+18.00
STA R6013+71.04 TO STA R6014+12.76

TN413 TN420 TN424

NOTES:

1. SEE DRAWING TN100 AND TN101 FOR GENERAL NOTES.
2. ALL STATIONS GIVEN ARE ALONG LEFT TRACK UNLESS OTHERWISE NOTED.
3. ALL DIMENSIONS ARE PERPENDICULAR TO CORRESPONDING TRACK UNLESS OTHERWISE NOTED.
4. SEE DRAWING TN104 FOR DETAILS OF BASE SLAB PROFILE.
5. SEE DRAWING TN102 FOR CONSTRUCTION JOINT AND WATERSTOP DETAIL.
6. SEE WP SERIES DRAWINGS FOR DETAILS OF WATERPROOFING SYSTEM.
7. SEE TN700 SERIES DRAWINGS FOR SUPPORT OF EXCAVATION DETAILS.
8. THE SECTION IS CUT PARALLEL TO THE RECEIVING PIT HEADWALL.
9. BASESLAB THICKNESS OF 4'-0" IS AT CORNER AT RIGHT TRACK ONLY. BASESLAB AT LEFT TRACK WILL BE THICKER ACCORDING TO LEFT TRACK PROFILE.
10. ROOF SLAB STEPS FROM 3'-0" AT OUTERMOST CORNERS, TO 2'-6" AT CONSTRUCTION JOINT L6013+83.92.
11. LEAN CONCRETE INFILL CLASS D ABOVE RECIEVING PIT ONLY. 4" MUDSLAB ELSEWHERE.

NO.	DATE	DESCRIPTION
1	3/14/08	ADDENDUN 3 – DRAWING MODIFIED

REVISIONS

THE PREPARATION OF THIS DOCUMENT HAS BEEN FINANCED IN PART THROUGH A GRANT FROM THE FEDERAL TRANSIT ADMINISTRATION, U.S. DEPARTMENT OF TRANSPORTATION, UNDER THE URBAN MASS TRANSPORTATION ACT OF 1964, AS AMENDED, FOR THE PORT AUTHORITY OF ALLEGHENY COUNTY, PENNSYLVANIA.

PETER DENNIS MARTIZ
SIGNATURE

DMJM HARRIS | AECOM
FOUR GATEWAY CENTER
20TH FLOOR
PITTSBURGH, PA. 15222
APPROVED 3/14/08 DATE

DESIGNED	CB
DRAWN	NPD
CHECKED	MBT
IN CHARGE	DPH
DATE	FEB 1, 2008
SCALE	1/4"=1'-0"

PORT AUTHORITY OF ALLEGHENY COUNTY
PITTSBURGH PENNSYLVANIA

NORTH SHORE CONNECTOR
GATEWAY STATION SHELL
CROSS SECTION
STA L6013+75 TO STA L6014+18

Port Authority

CONTRACT NO. NSC-004R
DWG. NO. TN453 SHT. 114

TABLE OF DIMENSIONS
(SEE NOTE 3)

STA.	LINE	DIM A	DIM B	EL. A	EL. B
L6014+18.00	-	8'-9¼"	9'-4½"	697.08	697.04
L6014+35.00	-	8'-8⅝"	9'-4½"	696.58	696.74

C.J. DENOTES CONSTRUCTION JOINT

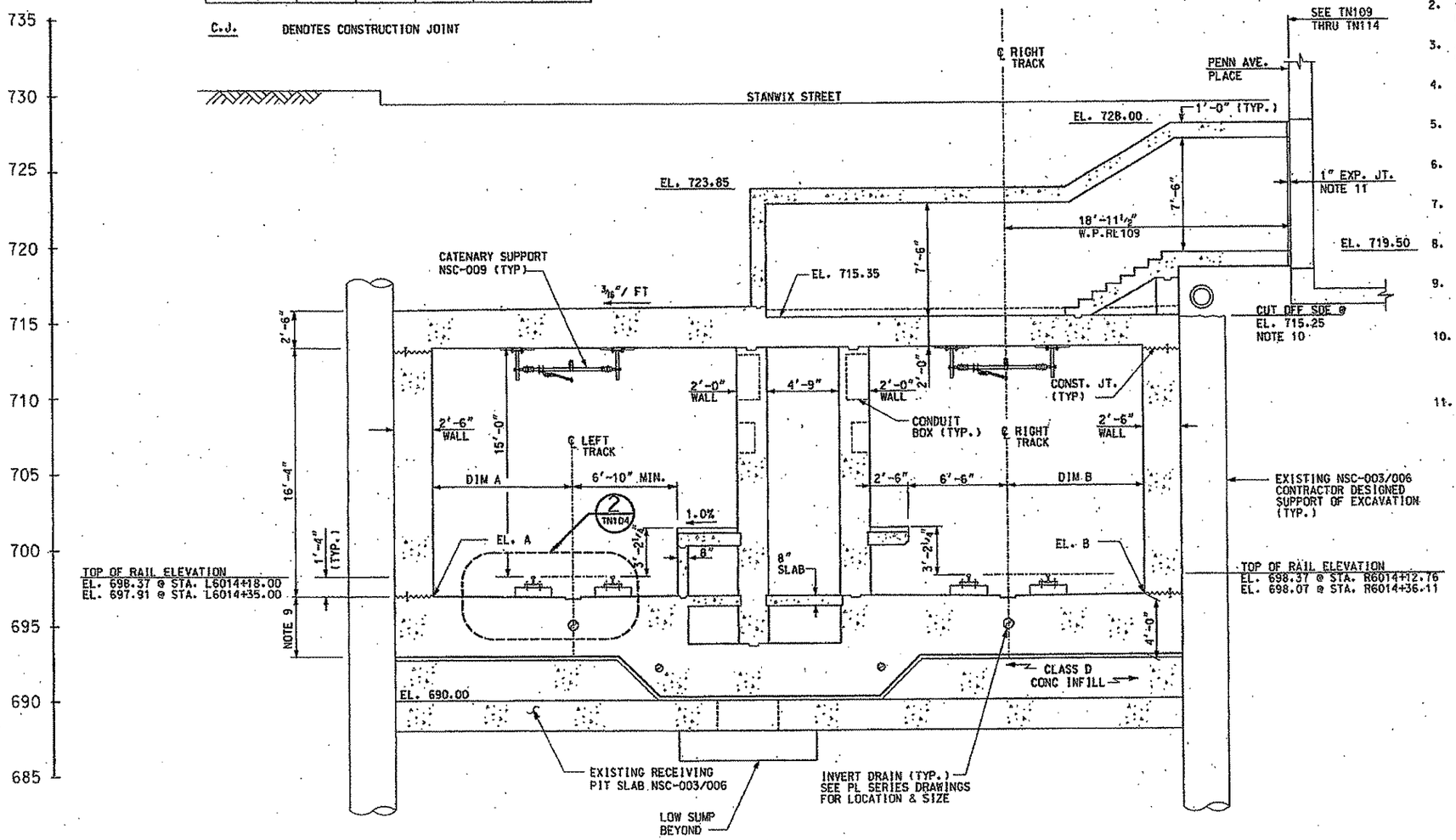

SECTION A

GATEWAY CENTER STATION
STA. L6014+18.00 TO STA. L6014+35.00
STA. R6014+12.76 TO STA. R6014+36.11

TN413 TN420 TN424

NOTES:

1. SEE DRAWING TN100 AND TN101 FOR GENERAL NOTES.
2. ALL STATIONS GIVEN ARE ALONG LEFT TRACK UNLESS OTHERWISE NOTED.
3. ALL DIMENSIONS ARE PERPENDICULAR TO CORRESPONDING TRACK UNLESS OTHERWISE NOTED.
4. SEE DRAWING TN104 FOR DETAILS OF BASE SLAB PROFILE.
5. SEE DRAWING TN102 FOR CONSTRUCTION JOINT AND WATERSTOP DETAIL.
6. SEE WP SERIES DRAWINGS FOR DETAILS OF WATERPROOFING SYSTEM.
7. SEE TN700 SERIES DRAWINGS FOR SUPPORT OF EXCAVATION DETAILS.
8. THE SECTION IS CUT PARALLEL TO THE RECEIVING PIT HEADWALL.
9. BASESLAB THICKNESS OF 4'-0" IS AT CORNER AT RIGHT TRACK ONLY. BASESLAB AT LEFT TRACK WILL BE THICKER ACCORDING TO LEFT TRACK PROFILE.
10. PROTECT WATERPROOFING SYSTEM AT ALL TIMES ESPECIALLY WHEN WITHIN 2 FEET OF TUNNEL ROOF PROTECTION. USE LOW ENERGY REMOTE OPERATED MACHINERY AND FLOOD THE PIT WHEN TORCH CUTTING SOLDIER PILES.
11. USE 9" TEAR WEB WATERSTOP.

NO.	DATE	DESCRIPTION

REVISIONS

THE PREPARATION OF THIS DOCUMENT HAS BEEN FINANCED IN PART THROUGH A GRANT FROM THE FEDERAL TRANSIT ADMINISTRATION, U.S. DEPARTMENT OF TRANSPORTATION, UNDER THE URBAN MASS TRANSPORTATION ACT OF 1964, AS AMENDED. FOR THE PORT AUTHORITY OF ALLEGHENY COUNTY, PENNSYLVANIA.

PROFESSIONAL ENGINEER PETER DENNIS MARRITZ

SIGNATURE

DMJM HARRIS | AECOM
FOUR GATEWAY CENTER
20TH FLOOR
PITTSBURGH, PA. 15222

APPROVED DATE 2/1/08

DESIGNED NM
DRAWN NPD
CHECKED WBT
IN CHARGE DPH
DATE FEB 1, 2008
SCALE 1/4"=1'-0"
4' 2' 0 4'

PORT AUTHORITY OF ALLEGHENY COUNTY
PITTSBURGH PENNSYLVANIA

NORTH SHORE CONNECTOR
GATEWAY STATION SHELL
CROSS SECTION
STA L6014+18 TO STA L6014+35

Port Authority

CONTRACT NO. NSC-004R
DWG. NO. TN454 SHT. 115

$DATE$ $TIME$
$FILE$

TABLE OF DIMENSIONS
(SEE NOTE 3)

STA.	LINE	EL. A	EL. B
L6014+35.00	--	696.58	696.74
L6014+49.57	--	696.02	696.42

C.J. DENOTES CONSTRUCTION JOINT

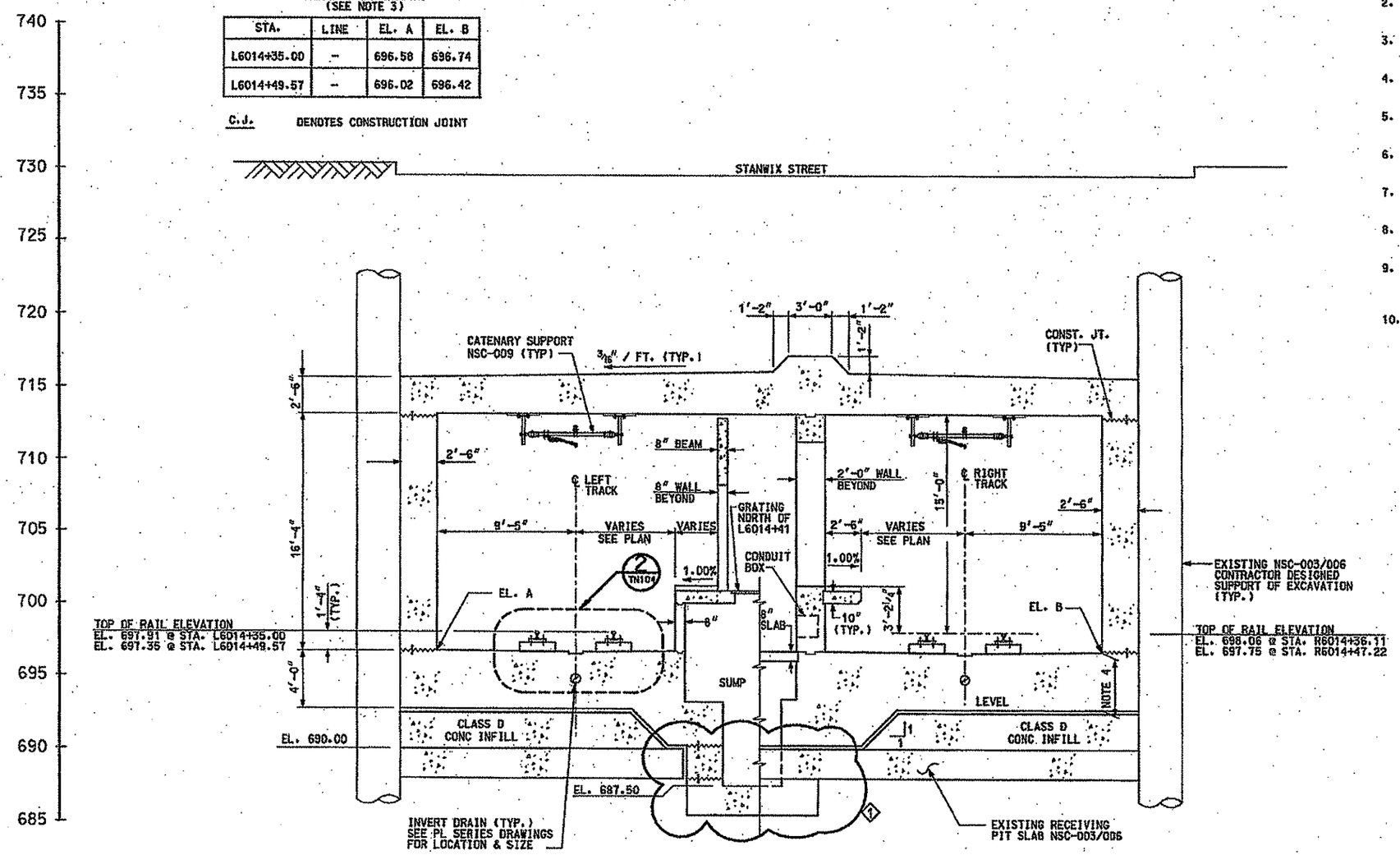

SECTION A

GATEWAY CENTER STATION
STA. L6014+35.00 TO STA. L6014+49.57
STA. R6014+36.11 TO STA. R6014+47.22

TN413 TN420 TN424

NOTES:

1. SEE DRAWING TN100 AND TN101 FOR GENERAL NOTES.
2. ALL STATIONS GIVEN ARE ALONG LEFT TRACK UNLESS OTHERWISE NOTED.
3. ALL DIMENSIONS ARE PERPENDICULAR TO CORRESPONDING TRACK UNLESS OTHERWISE NOTED.
4. SEE DRAWING TN104 FOR DETAILS OF BASE SLAB PROFILE.
5. SEE DRAWING TN102 FOR CONSTRUCTION JOINT AND WATERSTOP DETAIL.
6. SEE WP SERIES DRAWINGS FOR DETAILS OF WATERPROOFING SYSTEM.
7. SEE TN700 SERIES DRAWINGS FOR SUPPORT OF EXCAVATION DETAILS.
8. THE SECTION IS CUT PERPENDICULAR TO THE LEFT TRACK LOOKING UP-STATION.
9. BASESLAB THICKNESS OF 4'-0" IS AT CORNER AT LEFT TRACK ONLY. BASESLAB AT RIGHT TRACK WILL BE THICKER ACCORDING TO RIGHT TRACK PROFILE.
10. PROTECT WATERPROOFING SYSTEM AT ALL TIMES ESPECIALLY WHEN WITHIN 2 FEET OF TUNNEL ROOF PROTECTION. USE LOW ENERGY REMOTE OPERATED MACHINERY AND FLOOD THE PIT WHEN TORCH CUTTING SOLDIER PILES.

NO.	DATE	DESCRIPTION
1	4/03/08	ADDENDUM 7 - DRAWING MODIFIED

REVISIONS

THE PREPARATION OF THIS DOCUMENT HAS BEEN FINANCED IN PART THROUGH A GRANT FROM THE FEDERAL TRANSIT ADMINISTRATION, U.S. DEPARTMENT OF TRANSPORTATION, UNDER THE URBAN MASS TRANSPORTATION ACT OF 1964, AS AMENDED, FOR THE PORT AUTHORITY OF ALLEGHENY COUNTY, PENNSYLVANIA.

COMMONWEALTH OF PENNSYLVANIA REGISTERED PROFESSIONAL PETER DENNIS MAURITZ ENGINEER
SIGNATURE

DMJM HARRIS | AECOM
FOUR GATEWAY CENTER
20TH FLOOR
PITTSBURGH, PA. 15222
APPROVED 4/5/08 DATE

DESIGNED	MM
DRAWN	NPD
CHECKED	WBT
IN CHARGE	DPH
DATE	FEB 1, 2008
SCALE	1/4"=1'-0"

PORT AUTHORITY OF ALLEGHENY COUNTY
PITTSBURGH PENNSYLVANIA

NORTH SHORE CONNECTOR
GATEWAY STATION SHELL
CROSS SECTION
STA L6014+35.00 TO STA L6014+49.57

PORT AUTHORITY

CONTRACT NO. NSC-004R
DWG. NO. TN455 SHT. 116

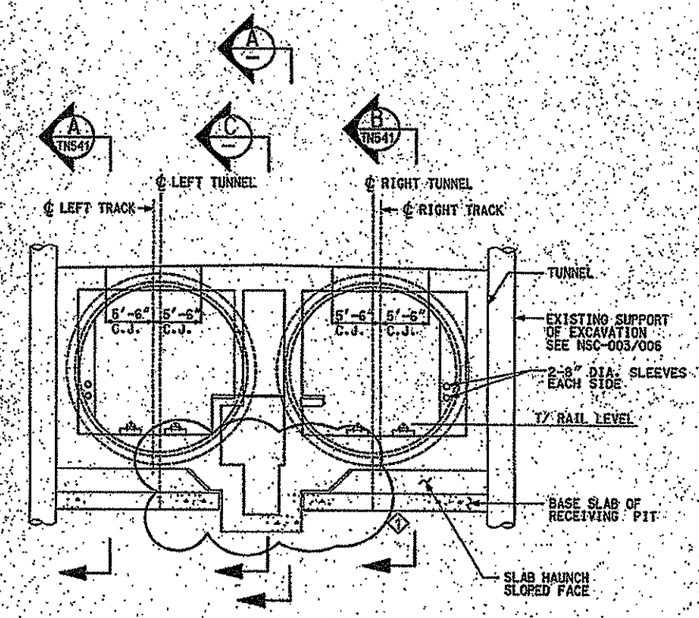

SECTION THROUGH RECEIVING PIT (B)

VIEW LOOKING UPSTATION AT STA. L6014+49.57

NTS

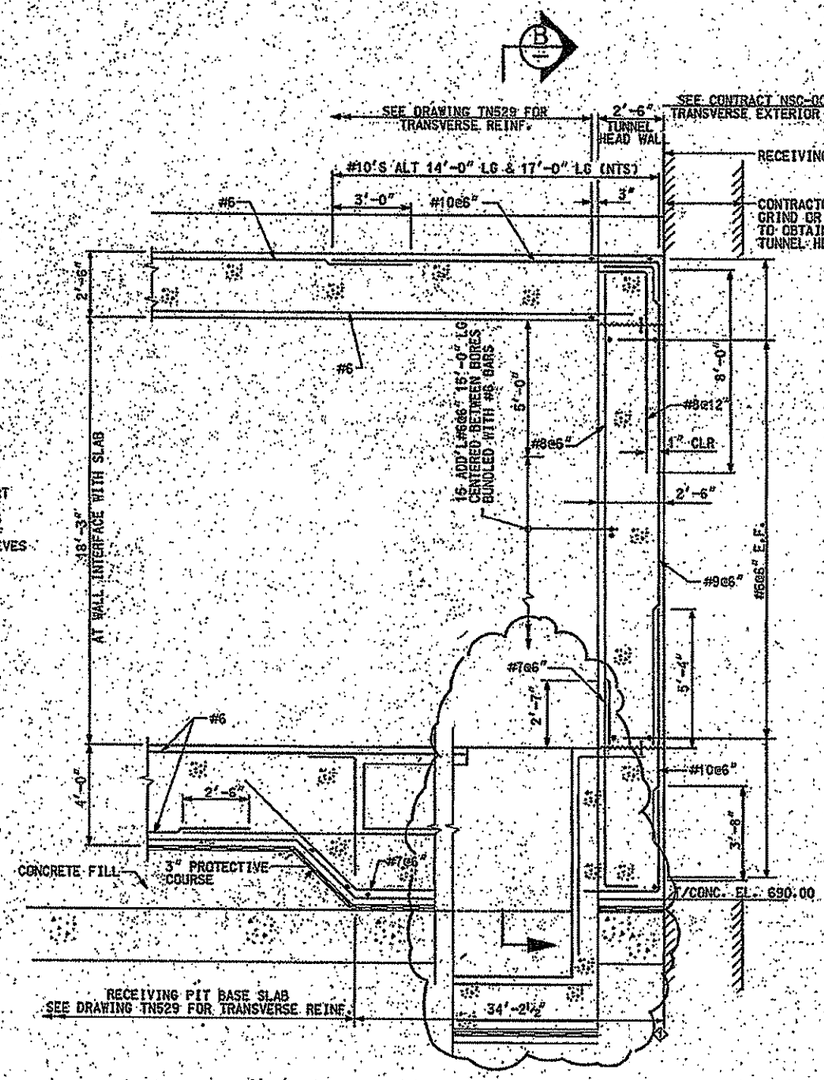

TUNNEL HEAD WALL BETWEEN BORES (C)

SCALE 3/8"=1'-0"

2' 0 2'

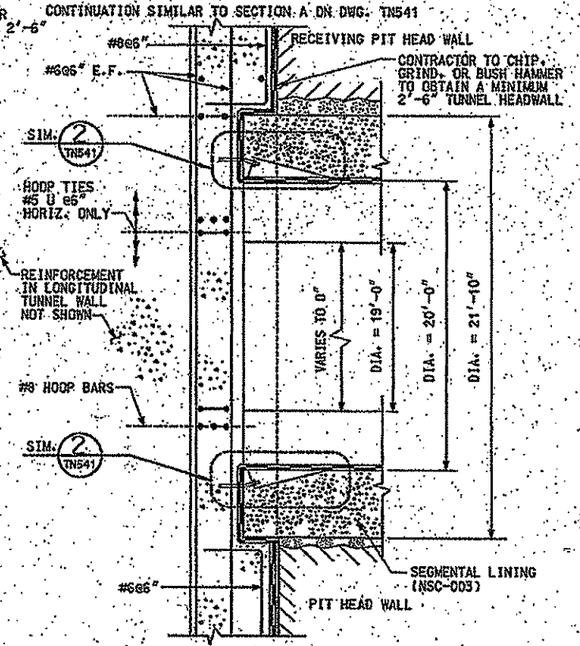

SECTION (A)

SCALE 1/2"=1'-0"

2' 1' 0 2'

NO.	DATE	DESCRIPTION
1	4/03/08	ADDENDUM 7 – DRAWING MODIFIED

REVISIONS

THE PREPARATION OF THIS DOCUMENT HAS BEEN FINANCED IN PART THROUGH A GRANT FROM THE FEDERAL TRANSIT ADMINISTRATION, U.S. DEPARTMENT OF TRANSPORTATION, UNDER THE URBAN MASS TRANSPORTATION ACT OF 1964, AS AMENDED, FOR THE PORT AUTHORITY OF ALLEGHENY COUNTY, PENNSYLVANIA.

REGISTERED PROFESSIONAL ENGINEER PETER DENNIS MARRITZ COMMONWEALTH OF PENNSYLVANIA

SIGNATURE

DMJM HARRIS | AECOM

FOUR GATEWAY CENTER
20TH FLOOR
PITTSBURGH, PA. 15222

APPROVED 4/2/08 DATE

DESIGNED	HH
DRAWN	DXC
CHECKED	WBT
IN CHARGE	DPH
DATE	FEB. 1, 2008
SCALE	AS SHOWN

PORT AUTHORITY OF ALLEGHENY COUNTY
PITTSBURGH PENNSYLVANIA

NORTH SHORE CONNECTOR

RECEIVING PIT HEAD WALL REINFORCEMENT @ BORED TUNNEL
SHEET 1 OF 2

PORT AUTHORITY

CONTRACT NO. NSC-004R

DWG. NO. TN540 SHT. 142

NOTES:
1. CONDUIT ROUTING PLANS SHOW A GENERAL CONDUIT ROUTING PLAN. CONTRACTOR SHALL ROUTE CONDUIT AS FIELD CONDITIONS PERMIT.
2. SEE TN591 FOR CONDUIT SCHEDULE.

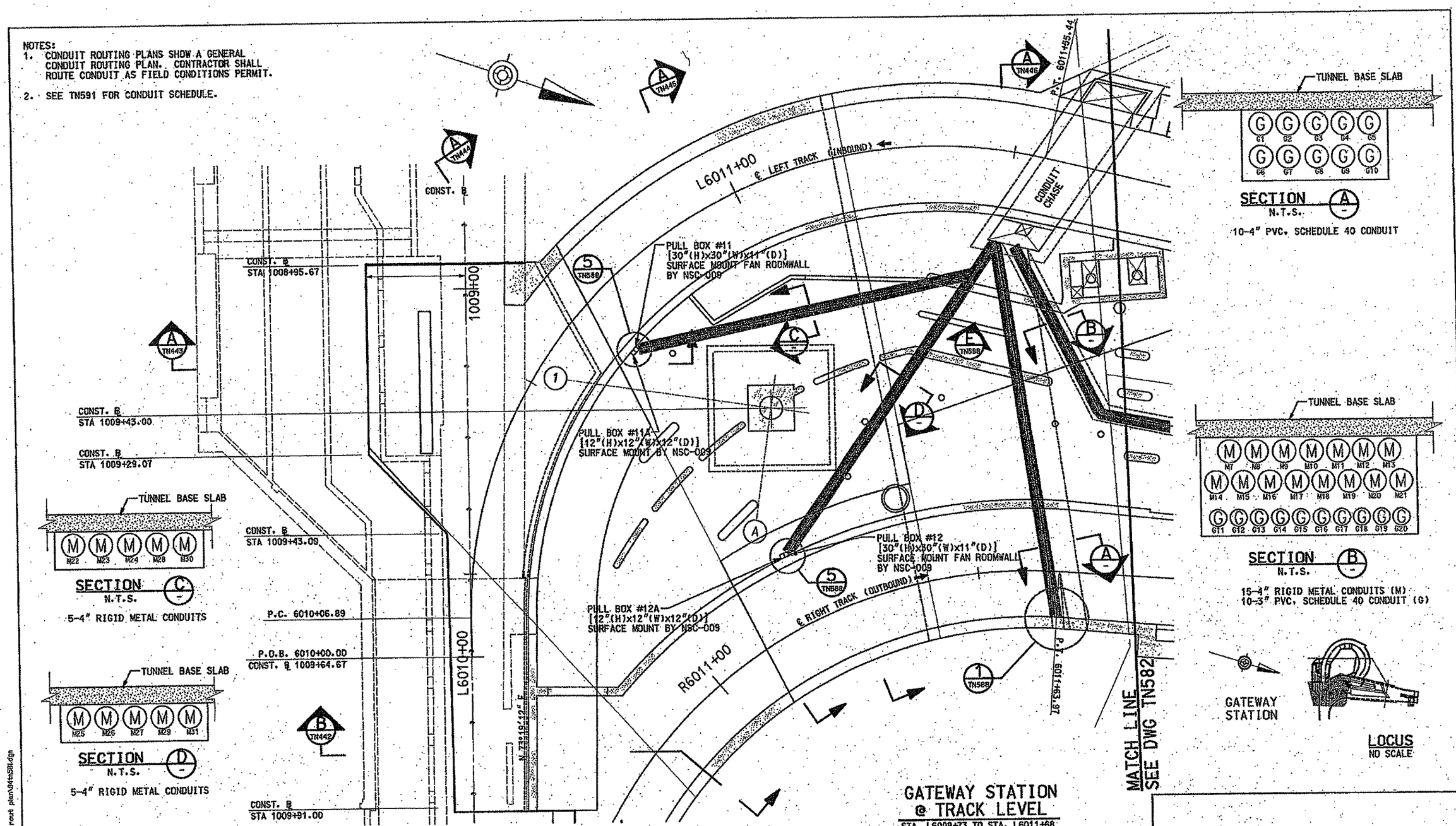

ND.	DATE	DESCRIPTION

REVISIONS

THE PREPARATION OF THIS DOCUMENT HAS BEEN FINANCED IN PART THROUGH A GRANT FROM THE FEDERAL TRANSIT ADMINISTRATION, U.S. DEPARTMENT OF TRANSPORTATION, UNDER THE URBAN MASS TRANSPORTATION ACT OF 1964, AS AMENDED, FOR THE PORT AUTHORITY OF ALLEGHENY COUNTY, PENNSYLVANIA.

COMMONWEALTH OF PENNSYLVANIA REGISTERED PROFESSIONAL DAVID P. HANES ENGINEER

SIGNATURE

DMJM HARRIS | AECOM
FOUR GATEWAY CENTER
20TH FLOOR
PITTSBURGH, PA. 15222

APPROVED — DATE 2/1/08

DESIGNED	LM, GF, MA
DRAWN	CN
CHECKED	WT
IN CHARGE	DPH
DATE	FEB 1, 2008
SCALE	1/8"=1'-0"

PORT AUTHORITY OF ALLEGHENY COUNTY
PITTSBURGH PENNSYLVANIA

NORTH SHORE CONNECTOR
GATEWAY STATION SHELL
GATEWAY STATION PLAN @ TRACK LEVEL - CONDUIT ROUTING PLAN
SHEET 1 OF 6

Port Authority

CONTRACT NO. NSC-004 R
DWG. NO. TN581 SHT. 156

2/4/2008 1:02:09 PM
n:\dist\fmal\grk\gr cbt\tunnel conduit rout plan\04tn581.dgn

NOTES:
1. CONDUIT ROUTING PLANS SHOW A GENERAL CONDUIT ROUTING PLAN. CONTRACTOR SHALL ROUTE CONDUIT AS FIELD CONDITIONS PERMIT.
2. SEE TN591 FOR CONDUIT SCHEDULE.

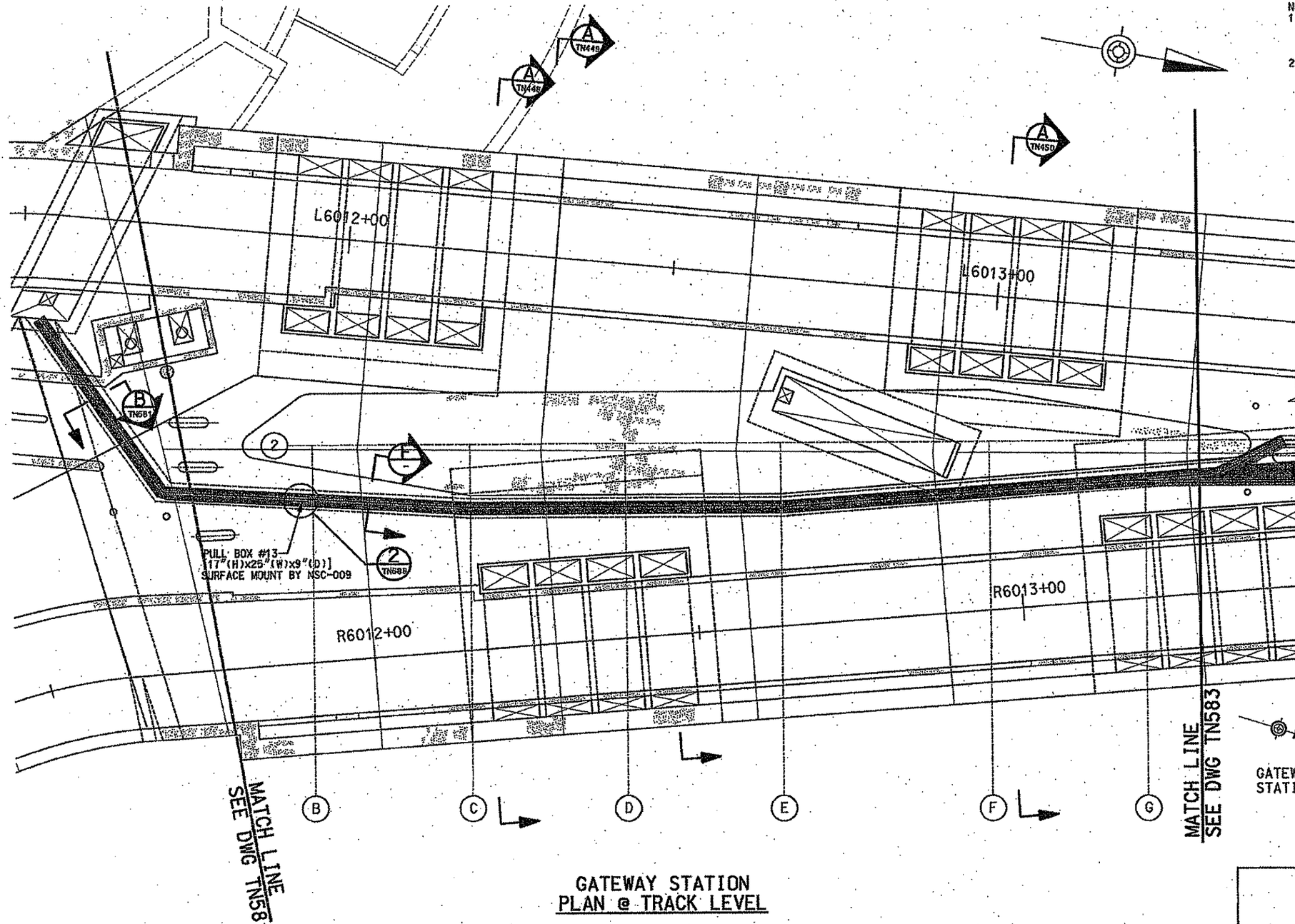

GATEWAY STATION
PLAN @ TRACK LEVEL

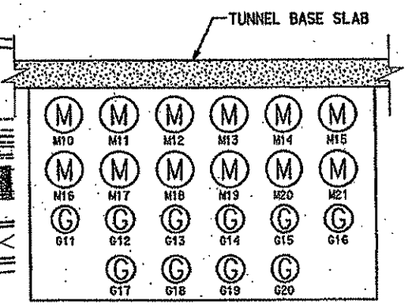

SECTION F
N.T.S.

12-4" RIGID METAL CONDUITS (M)
10-3" PVC, SCHEDULE 40 CONDUIT (G)

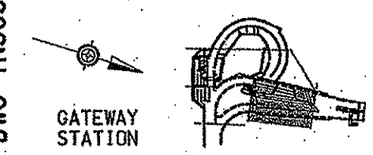

LOCUS
NO SCALE

NO.	DATE	DESCRIPTION

REVISIONS

THE PREPARATION OF THIS DOCUMENT HAS BEEN FINANCED IN PART THROUGH A GRANT FROM THE FEDERAL TRANSIT ADMINISTRATION, U.S. DEPARTMENT OF TRANSPORTATION, UNDER THE URBAN MASS TRANSPORTATION ACT OF 1964, AS AMENDED, FOR THE PORT AUTHORITY OF ALLEGHENY COUNTY, PENNSYLVANIA.

COMMONWEALTH OF PENNSYLVANIA REGISTERED PROFESSIONAL DAVID P. HANES 2/1/08
SIGNATURE

DMJM HARRIS | AECOM
FOUR GATEWAY CENTER
20TH FLOOR
PITTSBURGH, PA. 15222

APPROVED DATE 2/1/08

DESIGNED	LM, GF, MA
DRAWN	CM
CHECKED	WT
IN CHARGE	DPH
DATE	FEB 1, 2008
SCALE	1/8"=1'-0"

8' 4' 0 8'

PORT AUTHORITY OF ALLEGHENY COUNTY
PITTSBURGH PENNSYLVANIA

NORTH SHORE CONNECTOR
GATEWAY STATION SHELL
GATEWAY STATION PLAN @ TRACK LEVEL - CONDUIT ROUTING PLAN
SHEET 2 OF 6

Port Authority

CONTRACT NO. NSC-004 R
DWG. NO. TN582 SHT. 157

2/4/2008 10:32 PM
n:\nsf\final\pr\gr cad\tunnel conduit route plan\04tn582.dgn

NOTES:
1. CONDUIT ROUTING PLANS SHOW A GENERAL CONDUIT ROUTING PLAN. CONTRACTOR SHALL ROUTE CONDUIT AS FIELD CONDITIONS PERMIT.
2. SEE TN591 FOR CONDUIT SCHEDULE.

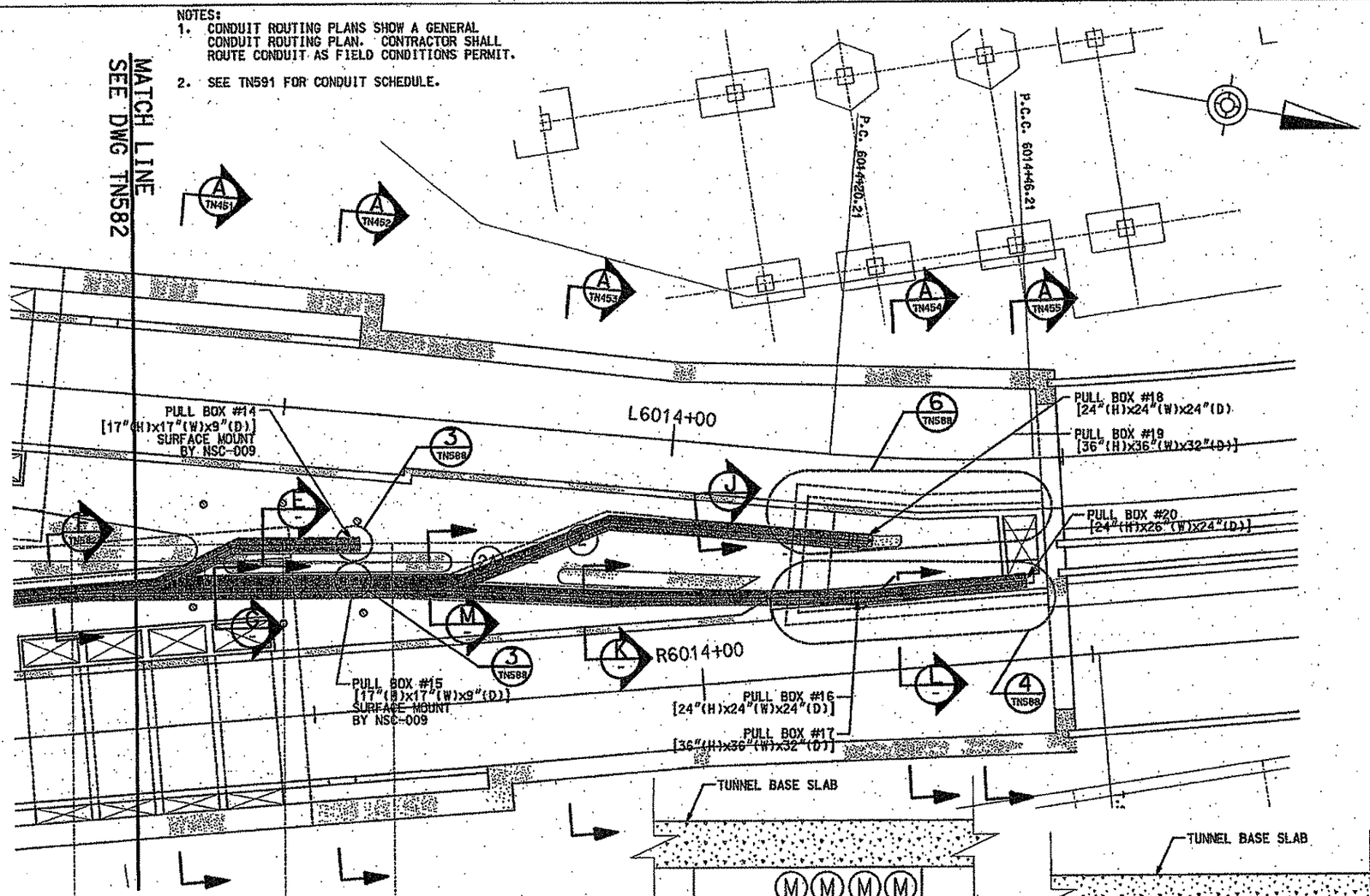

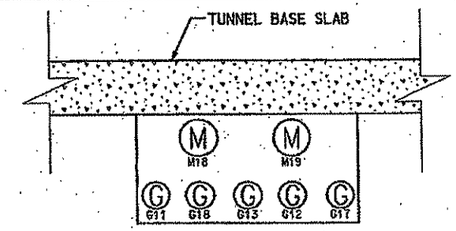

SECTION J
N.T.S.
2-4" RIGID METAL CONDUITS (M)
5-3"PVC. SCHEDULE 40 CONDUITS

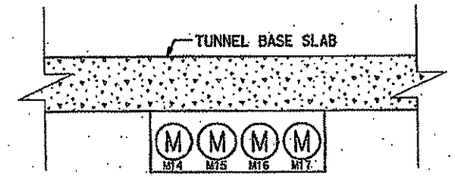

SECTION L
N.T.S.
4-4" RIGID METAL CONDUIT

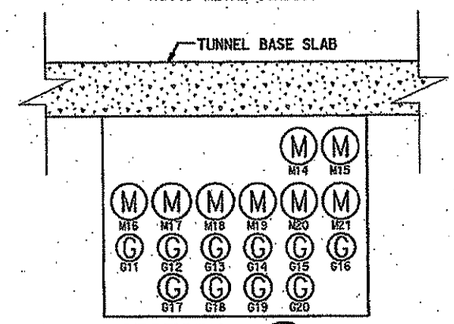

SECTION M
N.T.S.
8-4" RIGID METAL CONDUIT (M)
10-3" PVC. SCHEDULE 40 CONDUIT (G)

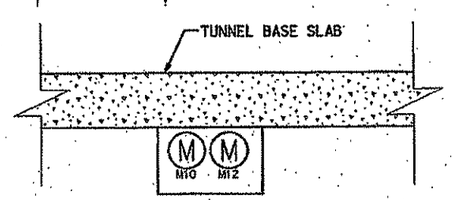

SECTION E
N.T.S.
2-4" RIGID METAL CONDUIT (M)

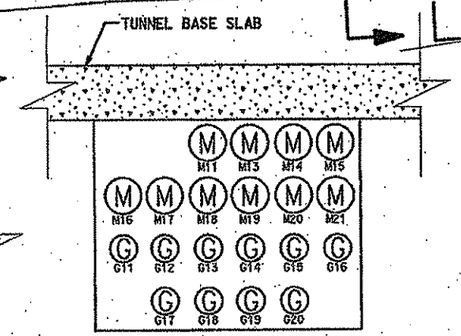

SECTION G
N.T.S.
10-4" RIGID METAL CONDUIT (M)
10-3" PVC. SCHEDULE 40 CONDUIT (G)

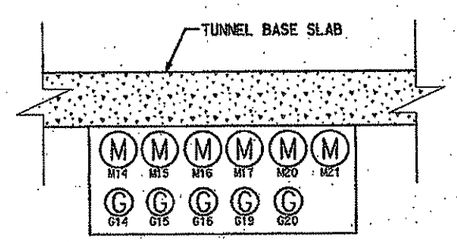

SECTION K
N.T.S.
6-4" RIGID METAL CONDUIT (M)
5-3" PVC. SCHEDULE 40 CONDUIT (G)

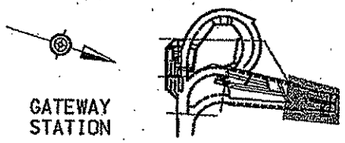

LOCUS
NO SCALE

GATEWAY STATION
PLAN @ TRACK LEVEL
STA. L6013+30 TO STA. L6014+48

NO.	DATE	DESCRIPTION

REVISIONS

THE PREPARATION OF THIS DOCUMENT HAS BEEN FINANCED IN PART THROUGH A GRANT FROM THE FEDERAL TRANSIT ADMINISTRATION, U.S. DEPARTMENT OF TRANSPORTATION, UNDER THE URBAN MASS TRANSPORTATION ACT OF 1964, AS AMENDED, FOR THE PORT AUTHORITY OF ALLEGHENY COUNTY, PENNSYLVANIA.

COMMONWEALTH OF PENNSYLVANIA REGISTERED PROFESSIONAL DAVID P. HANES
SIGNATURE

DMJM HARRIS | AECOM
FOUR GATEWAY CENTER
20TH FLOOR
PITTSBURGH, PA. 15222
APPROVED — DATE 2/1/08

DESIGNED	LM, GF, MA
DRAWN	CM
CHECKED	WT
IN CHARGE	DPH
DATE	FEB 1, 2008
SCALE	1/8"=1'-0" (8' 4' 0 8')

PORT AUTHORITY OF ALLEGHENY COUNTY
PITTSBURGH PENNSYLVANIA

NORTH SHORE CONNECTOR
GATEWAY STATION SHELL
GATEWAY STATION PLAN @ TRACK LEVEL - CONDUIT ROUTING PLAN
SHEET 3 OF 6

Port Authority

CONTRACT NO. NSC-004 R
DWG. NO. TN583 SHT. 158

2/4/2008 1:08:33 PM
n:\nsf\final\gp\gw t&c\tunnel conduit route plan\04tn583.dgn

NOTES:
1. CONDUIT ROUTING PLANS SHOW A GENERAL CONDUIT ROUTING PLAN. CONTRACTOR SHALL ROUTE CONDUIT AS FIELD CONDITIONS PERMIT.
2. SEE TN590 AND TN591 FOR CONDUIT SCHEDULE.

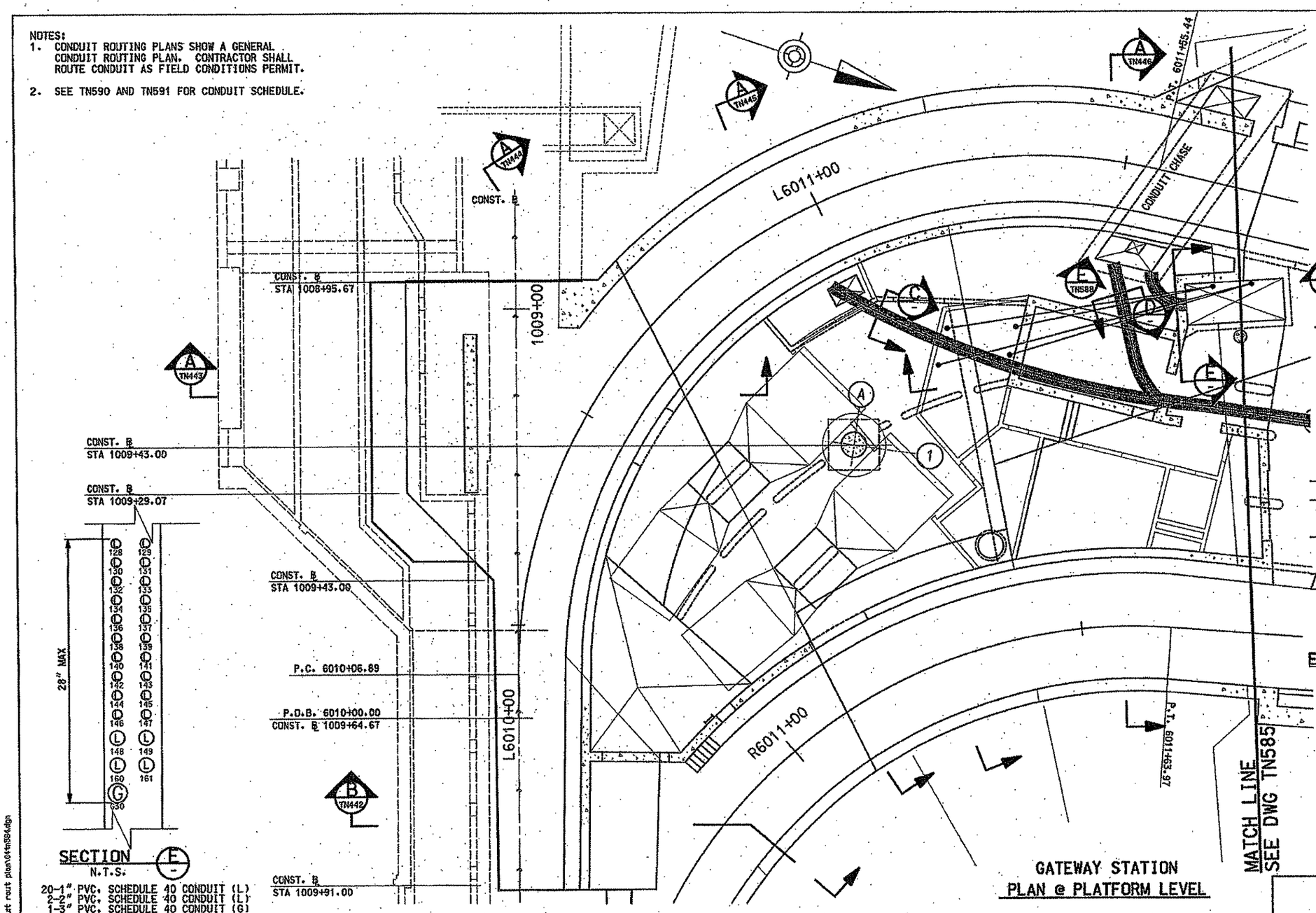

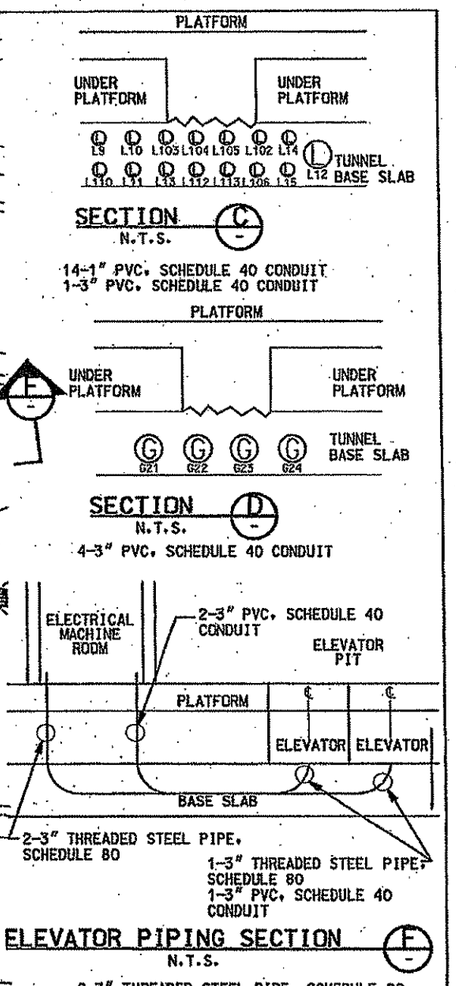

NOTE: WORK SECTION WITH DETAIL 1 ON TN589A

NO.	DATE	DESCRIPTION

REVISIONS

THE PREPARATION OF THIS DOCUMENT HAS BEEN FINANCED IN PART THROUGH A GRANT FROM THE FEDERAL TRANSIT ADMINISTRATION, U.S. DEPARTMENT OF TRANSPORTATION, UNDER THE URBAN MASS TRANSPORTATION ACT OF 1964, AS AMENDED, FOR THE PORT AUTHORITY OF ALLEGHENY COUNTY, PENNSYLVANIA.

COMMONWEALTH OF PENNSYLVANIA REGISTERED PROFESSIONAL DAVID P. HAWES ENGINEER STAMP

SIGNATURE

DMJM HARRIS | AECOM
FOUR GATEWAY CENTER
20TH FLOOR
PITTSBURGH, PA. 15222

APPROVED — DATE 2/1/08

DESIGNED	LM, GF, MA
DRAWN	CM
CHECKED	WT
IN CHARGE	DPH
DATE	FEB 1, 2008
SCALE	1/8"=1'-0"

8' 4' 0 8'

PORT AUTHORITY OF ALLEGHENY COUNTY
PITTSBURGH PENNSYLVANIA

NORTH SHORE CONNECTOR
GATEWAY STATION SHELL
GATEWAY STATION PLAN @ PLATFORM LEVEL - CONDUIT ROUTING PLAN
SHEET 4 OF 6

Port Authority

CONTRACT NO. NSC-004 R
DWG. NO. TN584 SHT. 159

2/4/2008 10:04 PM
n:\psf\final\gw\gw cbc\tunnel conduit rout plan\04tn584.dgn

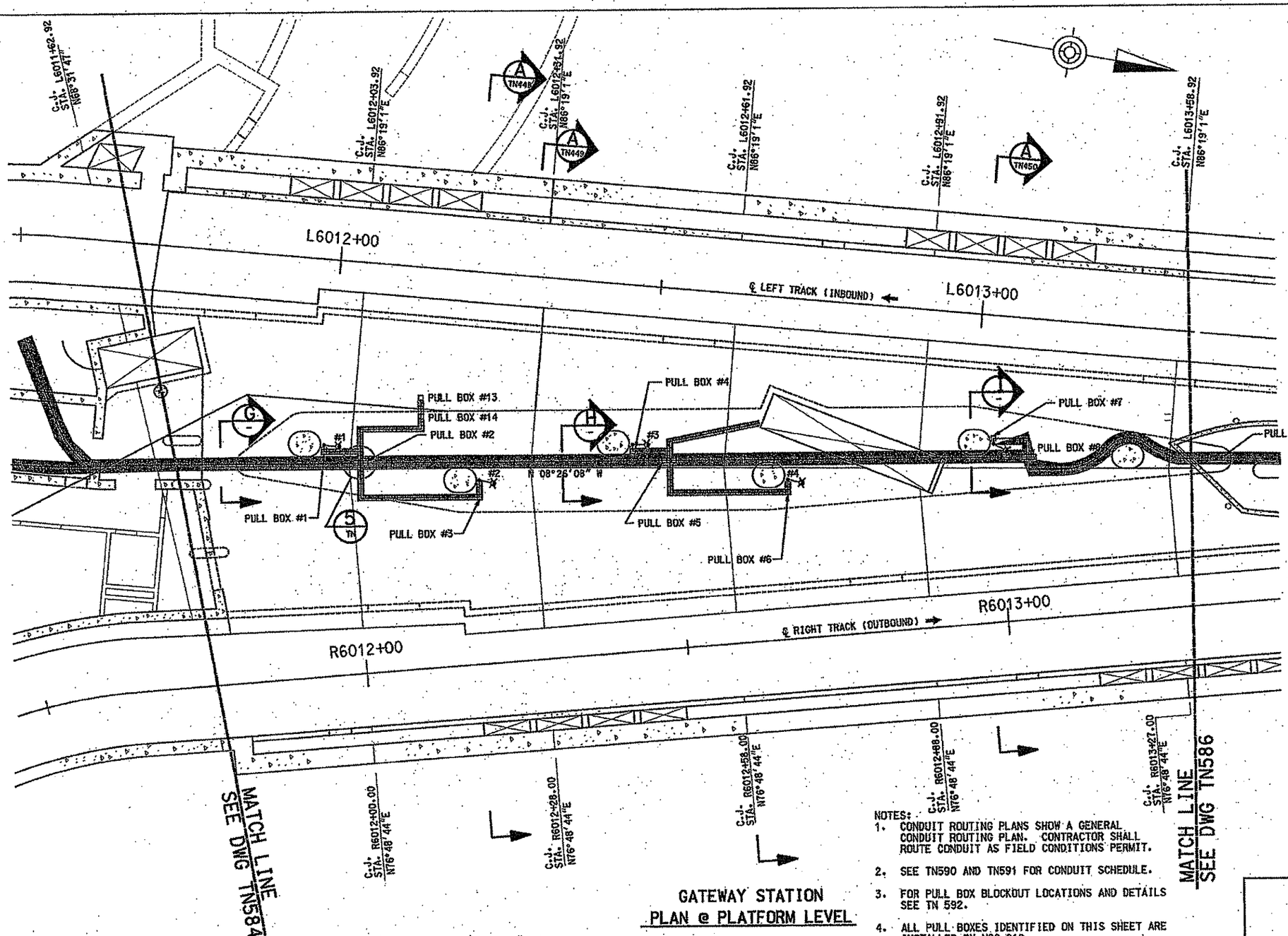

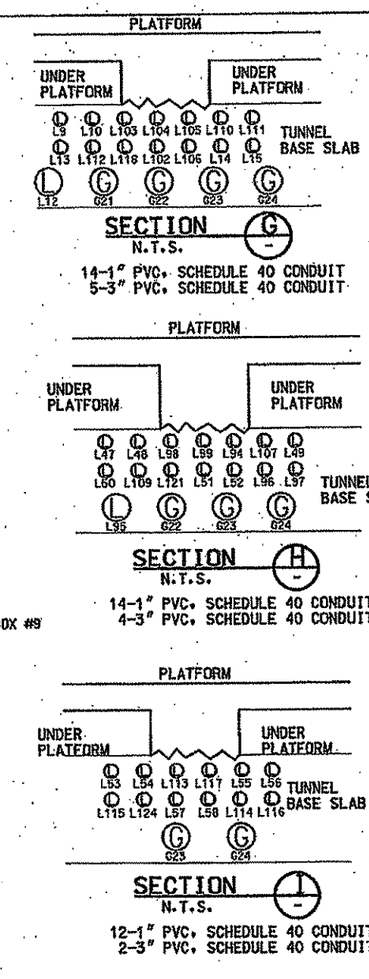

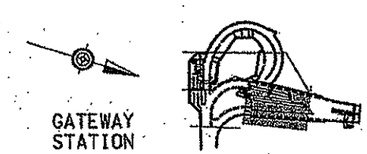

GATEWAY STATION PLAN @ PLATFORM LEVEL

NOTES:

1. CONDUIT ROUTING PLANS SHOW A GENERAL CONDUIT ROUTING PLAN. CONTRACTOR SHALL ROUTE CONDUIT AS FIELD CONDITIONS PERMIT.
2. SEE TN590 AND TN591 FOR CONDUIT SCHEDULE.
3. FOR PULL BOX BLOCKOUT LOCATIONS AND DETAILS SEE TN 592.
4. ALL PULL BOXES IDENTIFIED ON THIS SHEET ARE INSTALLED BY NSC-010.

NO.	DATE	DESCRIPTION

REVISIONS

THE PREPARATION OF THIS DOCUMENT HAS BEEN FINANCED IN PART THROUGH A GRANT FROM THE FEDERAL TRANSIT ADMINISTRATION, U.S. DEPARTMENT OF TRANSPORTATION, UNDER THE URBAN MASS TRANSPORTATION ACT OF 1964, AS AMENDED, FOR THE PORT AUTHORITY OF ALLEGHENY COUNTY, PENNSYLVANIA.

COMMONWEALTH OF PENNSYLVANIA REGISTERED PROFESSIONAL DAVID P. RUNKES ENGINEER

SIGNATURE

DMJM HARRIS | AECOM
FOUR GATEWAY CENTER
20TH FLOOR
PITTSBURGH, PA. 15222

APPROVED DATE 2/1/08

DESIGNED	LM, GF, MA
DRAWN	CM
CHECKED	WT
IN CHARGE	DPH
DATE	FEB 1, 2008
SCALE	1/8"=1'-0"

8' 4' 0 8'

PORT AUTHORITY OF ALLEGHENY COUNTY
PITTSBURGH PENNSYLVANIA

NORTH SHORE CONNECTOR
GATEWAY STATION SHELL
GATEWAY STATION PLAN @ PLATFORM LEVEL - CONDUIT ROUTING PLAN
SHEET 5 OF 6

Port Authority

CONTRACT NO. NSC-004 R
DWG. NO. TN585 SHT. 160

2/4/2008 10:25:35 PM
n:\nsf\final\gw\gw cdc\tunnel conduit rout plan\tn44\tn585.dgn

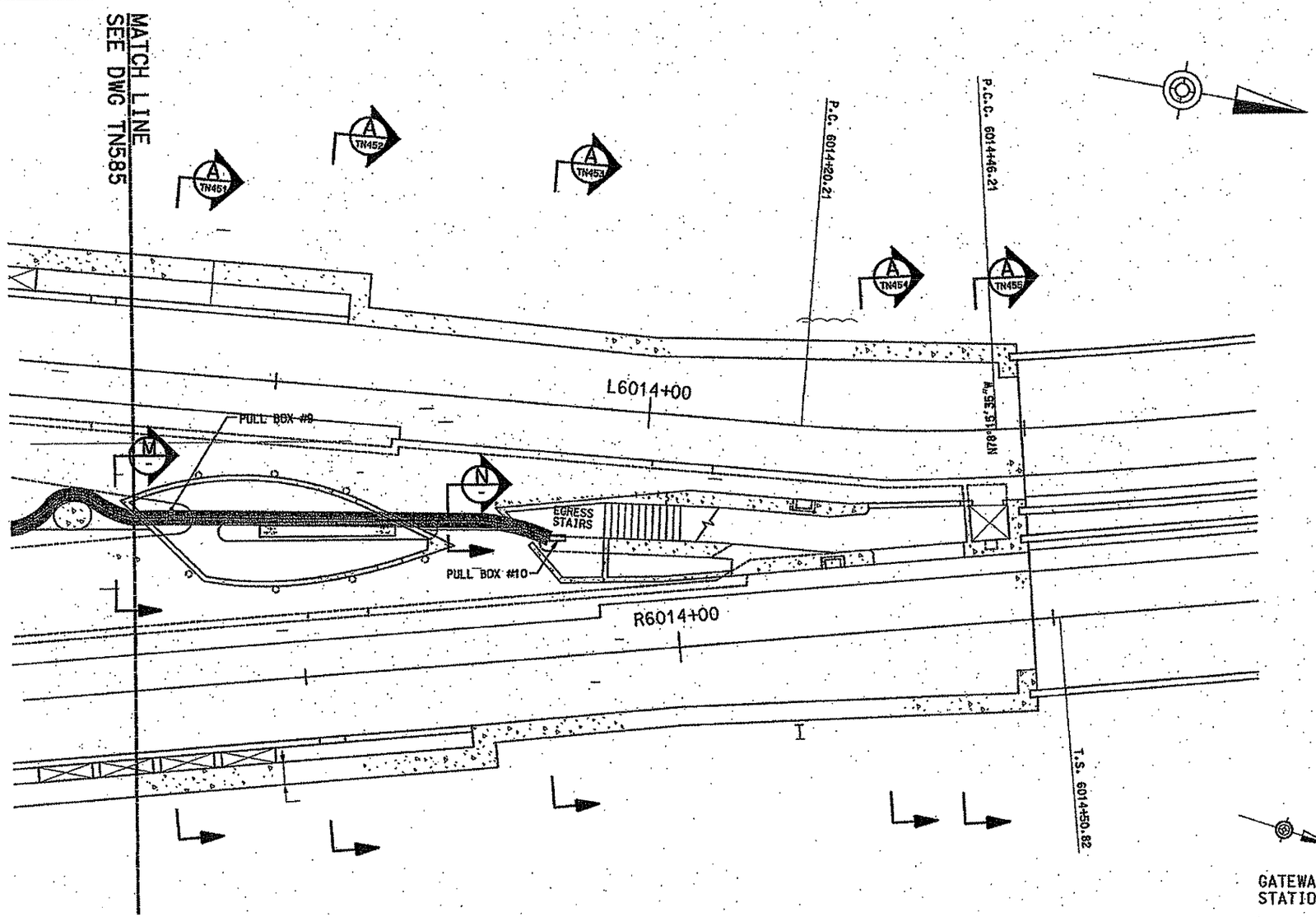

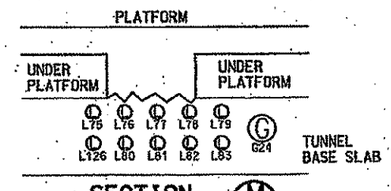

SECTION M
N.T.S.

10-1" PVC. SCHEDULE 40 CONDUIT
1-3" PVC. SCHEDULE 40 CONDUIT

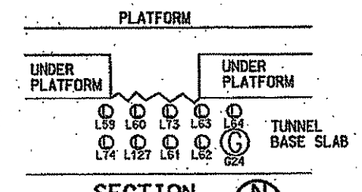

SECTION N
N.T.S.

9-1" PVC. SCHEDULE 40 CONDUIT
1-3" PVC. SCHEDULE 40 CONDUIT

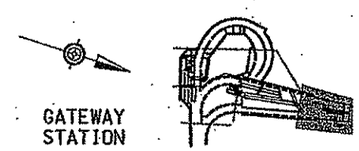

LOCUS
NO SCALE

NOTES:
1. CONDUIT ROUTING PLANS SHOW A GENERAL CONDUIT ROUTING PLAN. CONTRACTOR SHALL ROUTE CONDUIT AS FIELD CONDITIONS PERMIT.
2. SEE TN590 AND TN591 FOR CONDUIT SCHEDULE.
3. FOR PULL BOX BLOCKOUT LOCATIONS AND DETAILS SEE TN 592.
4. ALL PULL BOXES IDENTIFIED ON THIS SHEET ARE INSTALLED BY NSC-010.

GATEWAY STATION
PLAN @ PLATFORM LEVEL

NO.	DATE	DESCRIPTION

REVISIONS

THE PREPARATION OF THIS DOCUMENT HAS BEEN FINANCED IN PART THROUGH A GRANT FROM THE FEDERAL TRANSIT ADMINISTRATION, U.S. DEPARTMENT OF TRANSPORTATION, UNDER THE URBAN MASS TRANSPORTATION ACT OF 1964, AS AMENDED, FOR THE PORT AUTHORITY OF ALLEGHENY COUNTY, PENNSYLVANIA.

COMMONWEALTH OF PENNSYLVANIA REGISTERED PROFESSIONAL DAVID P. HANES ENGINEER
SIGNATURE

DMJM HARRIS | AECOM
FOUR GATEWAY CENTER
20TH FLOOR
PITTSBURGH, PA. 15222

APPROVED 2/1/08 DATE

DESIGNED	LM, GF, MA
DRAWN	CM
CHECKED	WT
IN CHARGE	DPH
DATE	FEB 1, 2008
SCALE	1/8"=1'-0" (8' 4' 0 8')

PORT AUTHORITY OF ALLEGHENY COUNTY
PITTSBURGH PENNSYLVANIA

NORTH SHORE CONNECTOR
GATEWAY STATION SHELL
GATEWAY STATION PLAN @ PLATFORM LEVEL - CONDUIT ROUTING PLAN
SHEET 6 OF 6

Port Authority

CONTRACT NO. NSC-004 R
DWG. NO. TN586 SHT. 161

2/4/2008 10:36 PM
n:\nsf\final\gw\gw c&c\tunnel conduit route plan\044tn586.dgn

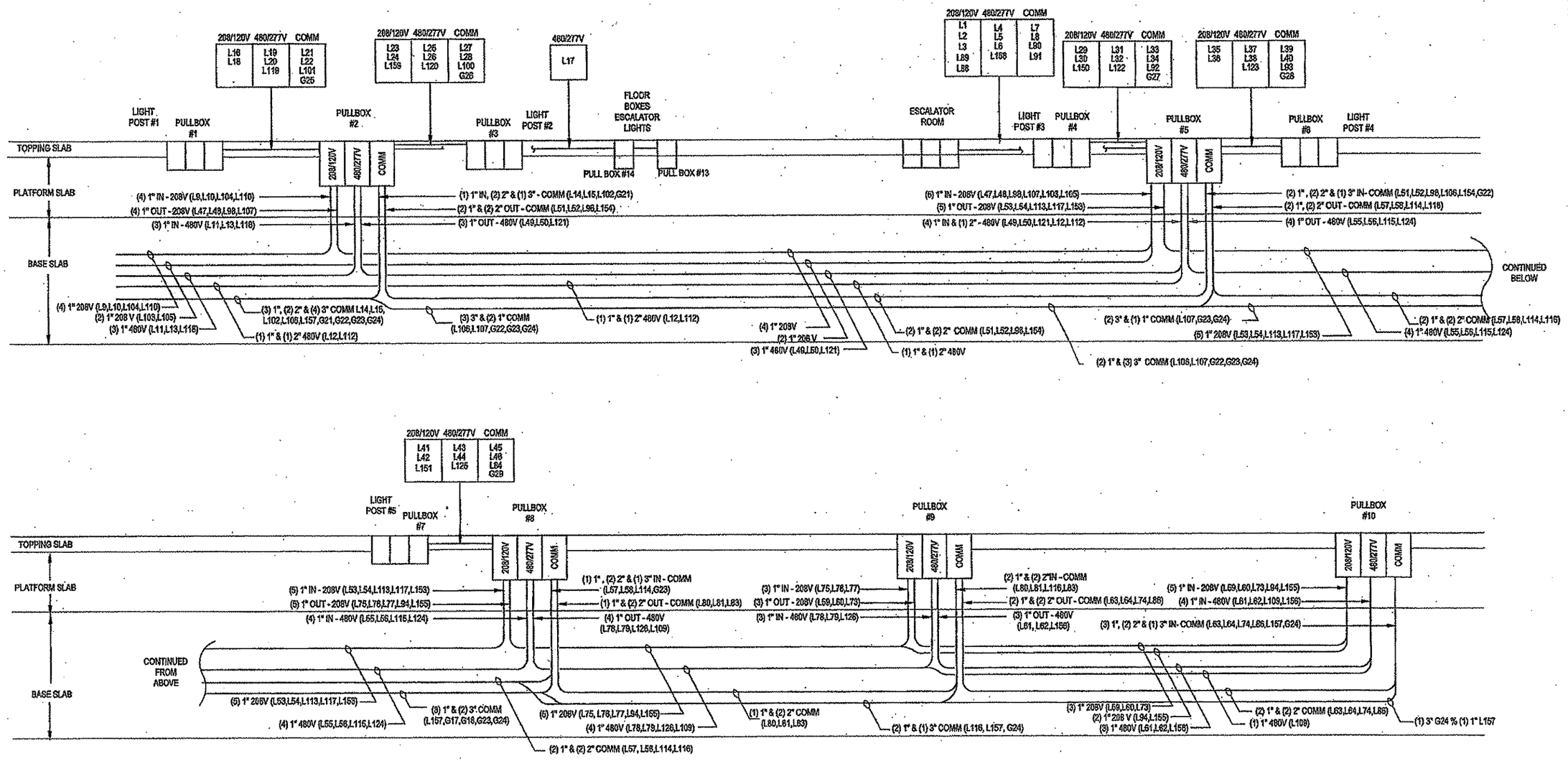

CONDUIT EMBEDMENTS AND PULL BOX SCHEMATIC (1)

The light/motion Collaborative

Allen & Shariff
ENGINEERING
700 River Avenue, Suite 333
Pittsburgh, PA 15212
Tel: 412.322.9280
Fax: 412.322.9281

NO.	DATE	DESCRIPTION

REVISIONS

THE PREPARATION OF THIS DOCUMENT HAS BEEN FINANCED IN PART THROUGH A GRANT FROM THE FEDERAL TRANSIT ADMINISTRATION, U.S. DEPARTMENT OF TRANSPORTATION, UNDER THE URBAN MASS TRANSPORTATION ACT OF 1964, AS AMENDED, FOR THE PORT AUTHORITY OF ALLEGHENY COUNTY, PENNSYLVANIA.

SIGNATURE

DMJM HARRIS | AECOM
FOUR GATEWAY CENTER
20TH FLOOR
PITTSBURGH, PA. 15222

APPROVED — DATE 2/1/08

DESIGNED	MTY
DRAWN	MTY
CHECKED	AEM
IN CHARGE	DPH
DATE	FEB 1, 2008
SCALE	NOT TO SCALE

PORT AUTHORITY OF ALLEGHENY COUNTY
PITTSBURGH PENNSYLVANIA

NORTH SHORE CONNECTOR
GATEWAY STATION SHELL
CONDUIT EMBEDMENTS AND PULL BOX SCHEMATIC

Port Authority

CONTRACT NO. NSC-004R
DWG. NO. TN567 SHT. 162

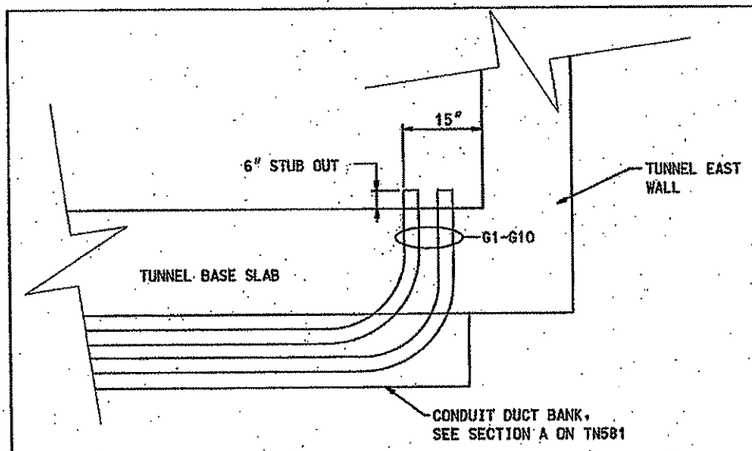

EAST WALL CONDUIT TERMINATION DETAIL (1 TN581)
N.T.S.

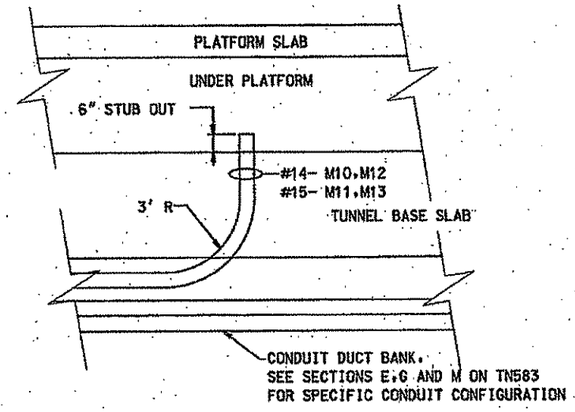

PULL BOX #14 AND #15 DETAIL (3 TN583)
N.T.S.

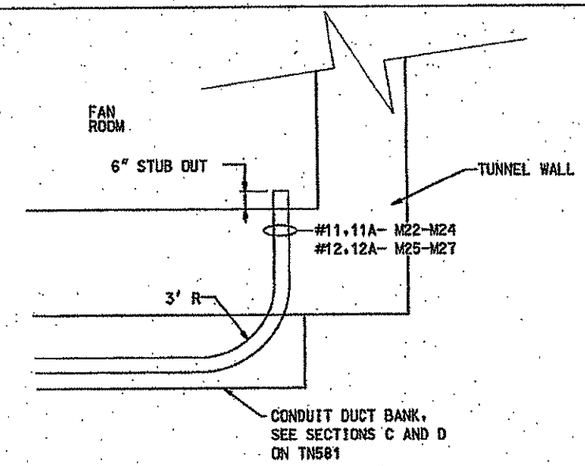

PULL BOX #11 AND #12 DETAIL (5 TN581)
N.T.S.

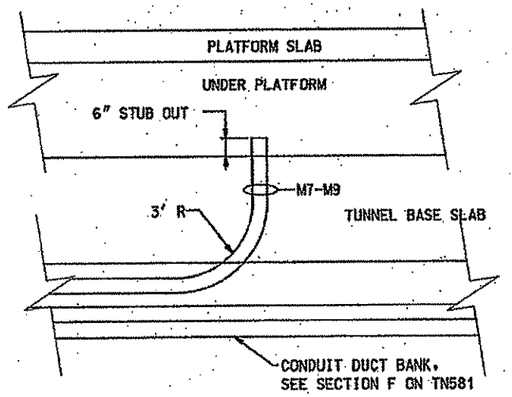

PULL BOX #13 DETAIL (2 TN582)
N.T.S.

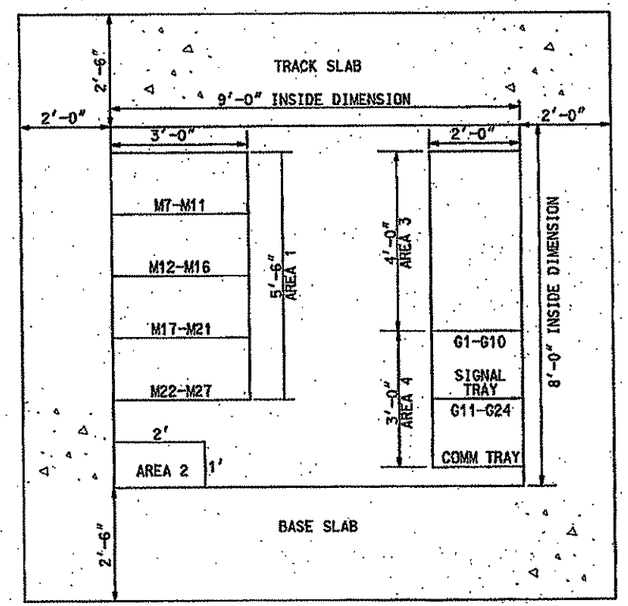

CONDUIT CHASE ELEVATION (E TN581)
N.T.S.

LEGEND

AREA 1- 3'(W) X 5'-6"(H) "M" SERIES
AREA 2- 2'(W) x 1'(H) NSC-D10 PIPING
AREA 3- 2'(W) x 4'-0"(H) "H" SERIES
AREA 4- 2'(W) x 3'-0"(H) "G" SERIES

NO.	DATE	DESCRIPTION

REVISIONS

THE PREPARATION OF THIS DOCUMENT HAS BEEN FINANCED IN PART THROUGH A GRANT FROM THE FEDERAL TRANSIT ADMINISTRATION, U.S. DEPARTMENT OF TRANSPORTATION, UNDER THE URBAN MASS TRANSPORTATION ACT OF 1964, AS AMENDED, FOR THE PORT AUTHORITY OF ALLEGHENY COUNTY, PENNSYLVANIA.

COMMONWEALTH OF PENNSYLVANIA REGISTERED PROFESSIONAL DAVID P. HAYES
SIGNATURE

DMJM HARRIS | AECOM
FOUR GATEWAY CENTER
20TH FLOOR
PITTSBURGH, PA. 15222

APPROVED DATE 2/1/08

DESIGNED	LM, GF, MA
DRAWN	CM
CHECKED	WT
IN CHARGE	DPH
DATE	FEB 1, 2008
SCALE	NTS

PORT AUTHORITY OF ALLEGHENY COUNTY
PITTSBURGH PENNSYLVANIA

NORTH SHORE CONNECTOR
GATEWAY STATION SHELL
GATEWAY STATION PLAN - CONDUIT ROUTING PLAN
DETAILS (1 OF 3)

Port Authority

CONTRACT NO. NSC-004 R
DWG. NO. TN588 SHT. 163

2/4/2008 10:26:26 PM
m:\usr\final\gr\gr cdc\tunnel conduit rout plan\04tn588.dgn

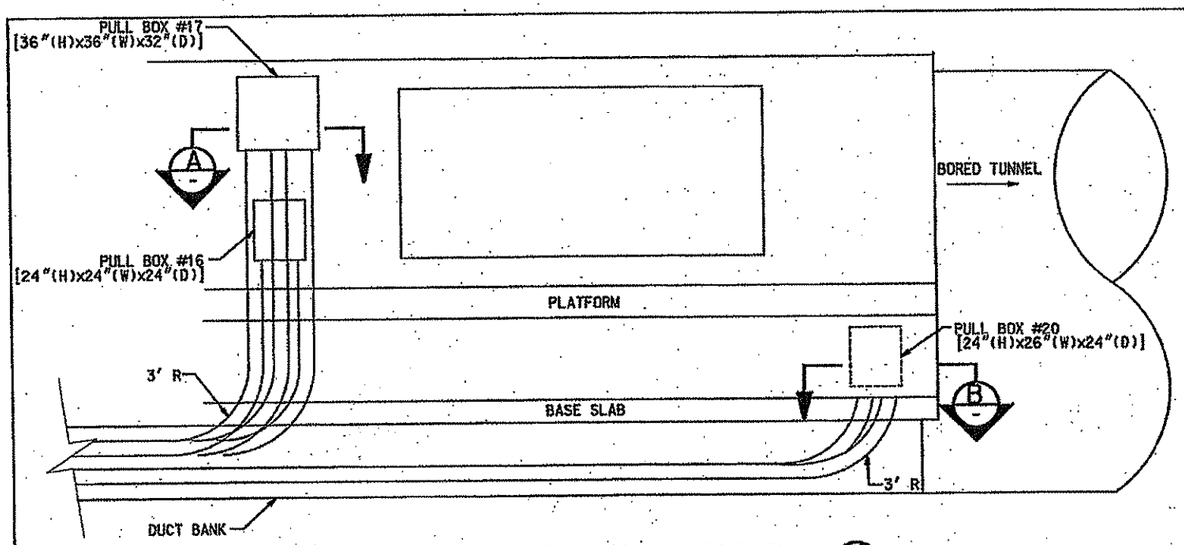

PULL BOX #16, #17, AND #20 DETAIL (4 / TN683)

N.T.S.

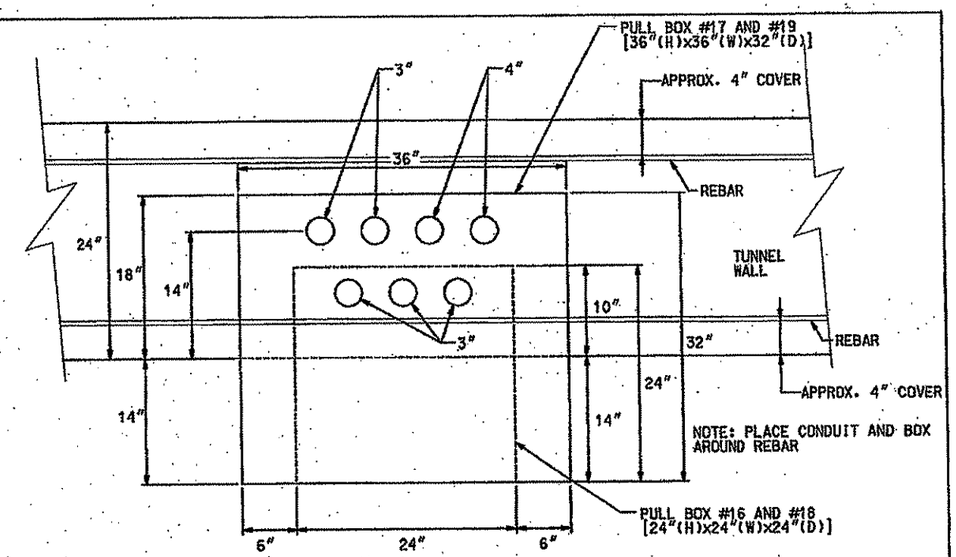

PULL BOX AT BORED TUNNEL INTERFACE SECTION (A)

N.T.S.

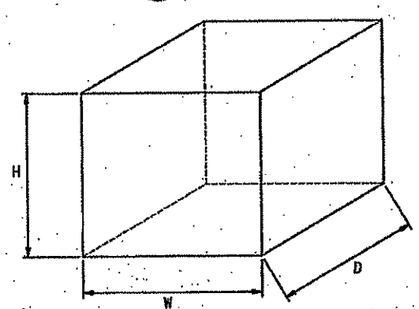

PULL BOX DIMENSION DETAIL (1)

N.T.S.

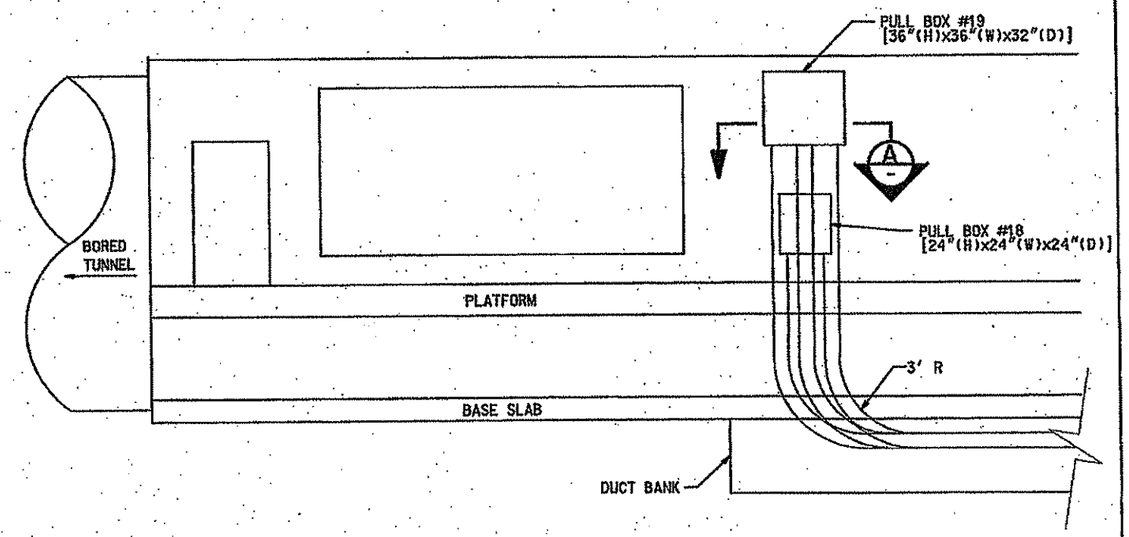

PULL BOX #18 AND #19 DETAIL (6 / TN583)

N.T.S.

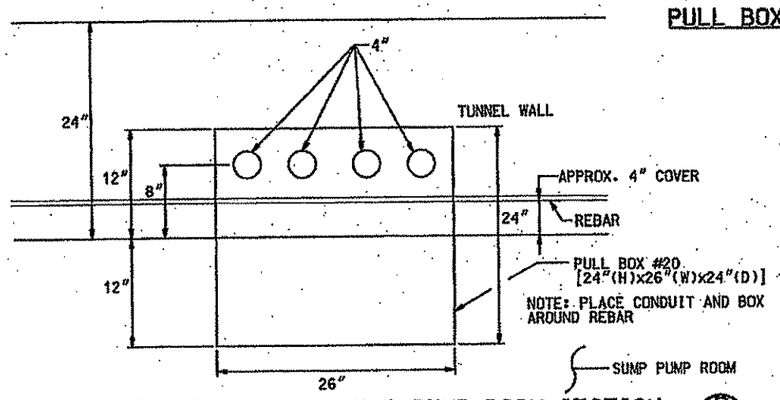

PULL BOX INSIDE WALL – SUMP PUMP ROOM SECTION (B)

N.T.S.

NO.	DATE	DESCRIPTION

REVISIONS

THE PREPARATION OF THIS DOCUMENT HAS BEEN FINANCED IN PART THROUGH A GRANT FROM THE FEDERAL TRANSIT ADMINISTRATION, U.S. DEPARTMENT OF TRANSPORTATION, UNDER THE URBAN MASS TRANSPORTATION ACT OF 1964, AS AMENDED, FOR THE PORT AUTHORITY OF ALLEGHENY COUNTY, PENNSYLVANIA.

COMMONWEALTH OF PENNSYLVANIA REGISTERED PROFESSIONAL DAVID P. HANES ENGINEER

SIGNATURE

DMJM HARRIS | AECOM
FOUR GATEWAY CENTER
20TH FLOOR
PITTSBURGH, PA. 15222

APPROVED — DATE 2/1/08

DESIGNED	GF, MA
DRAWN	CM
CHECKED	WT
IN CHARGE	DPH
DATE	FEB 1, 2008
SCALE	NTS

PORT AUTHORITY OF ALLEGHENY COUNTY
PITTSBURGH PENNSYLVANIA

NORTH SHORE CONNECTOR
GATEWAY STATION SHELL
GATEWAY STATION PLAN – CONDUIT ROUTING PLAN
DETAILS (2 OF 3)

Port Authority

CONTRACT NO. NSC-004 R
DWG. NO. TN589 SHT. 164

2/4/2008 1:02:36 PM
n:\nsf\final\gw\gw c&c\tunnel conduit rout plan\04tn588.dgn

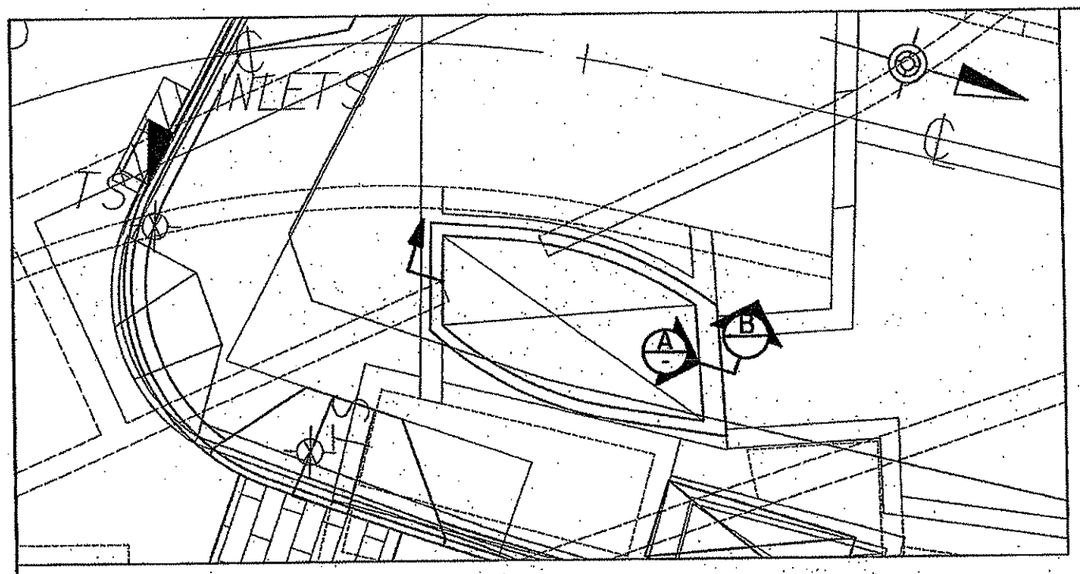

EXHAUST TOWER DETAIL 1

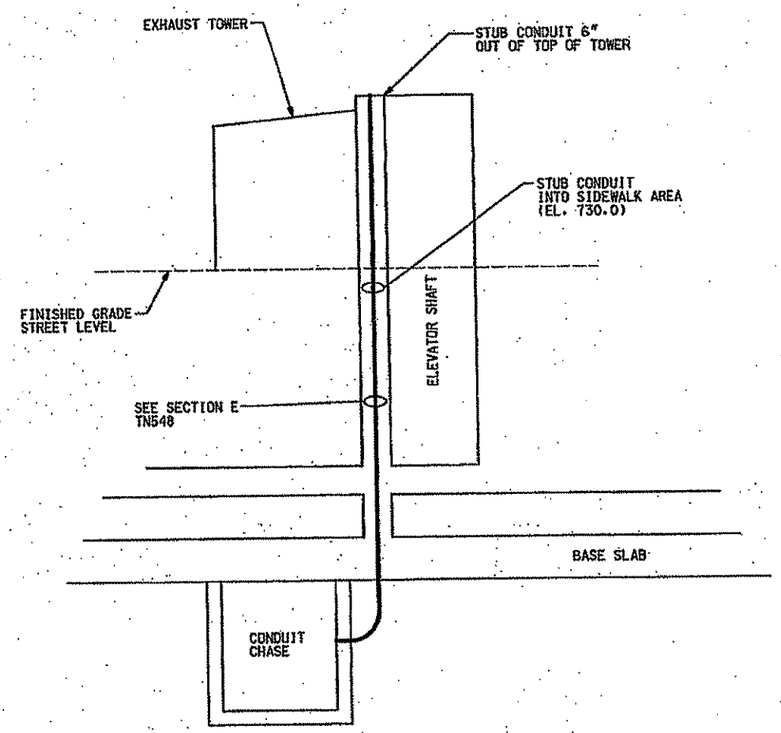

ELEVATION B

N.T.S.

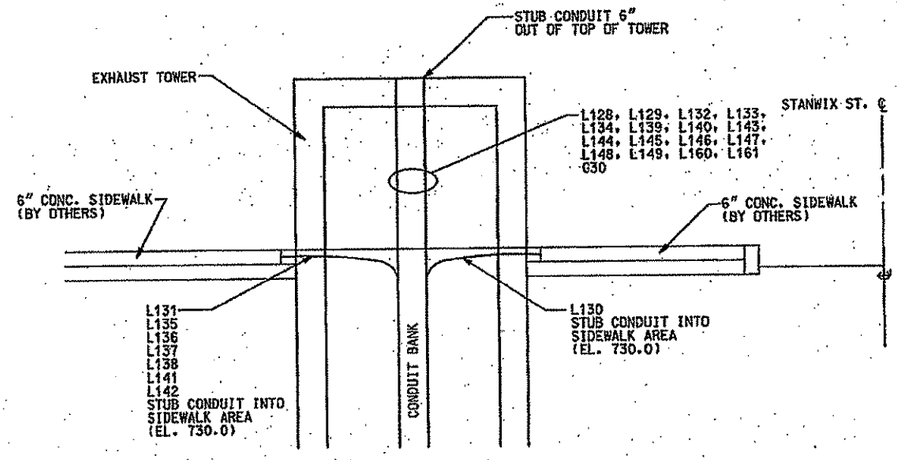

ELEVATION A

N.T.S.

NO.	DATE	DESCRIPTION

REVISIONS

THE PREPARATION OF THIS DOCUMENT HAS BEEN FINANCED IN PART THROUGH A GRANT FROM THE FEDERAL TRANSIT ADMINISTRATION, U.S. DEPARTMENT OF TRANSPORTATION, UNDER THE URBAN MASS TRANSPORTATION ACT OF 1964, AS AMENDED. FOR THE PORT AUTHORITY OF ALLEGHENY COUNTY, PENNSYLVANIA.

COMMONWEALTH OF PENNSYLVANIA REGISTERED PROFESSIONAL DAVID P. HARRIS ENGINEER

SIGNATURE

DMJM HARRIS | AECOM
FOUR GATEWAY CENTER
20TH FLOOR
PITTSBURGH, PA. 15222

APPROVED DATE 2/1/08

DESIGNED	GF, MA
DRAWN	CM
CHECKED	WT
IN CHARGE	DPH
DATE	FEB 1, 2008
SCALE	NTS

PORT AUTHORITY OF ALLEGHENY COUNTY
PITTSBURGH PENNSYLVANIA

NORTH SHORE CONNECTOR
GATEWAY STATION SHELL
GATEWAY STATION PLAN - CONDUIT ROUTING PLAN
DETAILS (3 OF 3)

Port Authority

CONTRACT NO. NSC-004 R
DWG. NO. TN689 A SHT. 154 A

2/4/2008 1:25:50 PM
N:\NSF\Final\Gw\GV C&C\Tunnel Conduit Route Plan\04tn689 A.dgn

"L" SERIES CONDUIT SCHEDULE

CONDUIT	POWER TYPE	SIZE	SERVES	DESTINATION FROM	DESTINATION TO
L1	208/120V	1"	RECEPTACLES	PB5	ESCMR
L2	208/120V	1"	CAMERA POWER	PB5	ESCMR
L3	208/120V	1"	SPARE	PB5	ESCMR
L4	480/277V	1"	EMERGENCY LIGHTS	PB5	ESCMR
L5	480/277V	2"	ESCALATOR POWER	PB5	ESCMR
L6	480/277V	1"	SPARE	PB5	ESCMR
L7	COMMUNICATIONS	1"	FIRE ALARM - NOTIFYING	PB5	ESCMR
L8	COMMUNICATIONS	1"	FIRE ALARM - SIGNALING	PB5	ESCMR
L9	208/120V	1"	RECEPTACLES	START	PB2
L10	208/120V	1"	SPARE	START	PB2
L11	480/277V	1"	EMERGENCY LIGHTS	START	PB2
L12	480/277V	2"	ESCALATOR	START	PB5
L13	480/277V	1"	SPARE	START	PB2
L14	COMMUNICATIONS	2"	FIRE ALARM - NOTIFYING	START	PB2
L15	COMMUNICATIONS	2"	FIRE ALARM - SIGNALING	START	PB2
L16	208/120V	1"	RECEPTACLES	PB2	PB1
L17	480/277V	1"	ESCALATOR LIGHTS	PB2	PB14
L18	208/120V	1"	SPARE	PB2	PB1
L19	480/277V	1"	EMERGENCY LIGHTS	PB2	PB1
L20	480/277V	1"	SPARE	PB2	PB1
L21	COMMUNICATIONS	1"	FIRE ALARM - NOTIFYING	PB2	PB1
L22	COMMUNICATIONS	1"	FIRE ALARM - SIGNALING	PB2	PB1
L23	208/120V	1"	RECEPTACLES	PB2	PB3
L24	208/120V	1"	SPARE	PB2	PB3
L25	480/277V	1"	EMERGENCY LIGHTS	PB2	PB3
L26	480/277V	1"	SPARE	PB2	PB3
L27	COMMUNICATIONS	1"	FIRE ALARM - NOTIFYING	PB2	PB3
L28	COMMUNICATIONS	1"	FIRE ALARM - SIGNALING	PB2	PB3
L29	208/120V	1"	RECEPTACLES	PB5	PB4
L30	208/120V	1"	SPARE	PB5	PB4
L31	480/277V	1"	EMERGENCY LIGHTS	PB5	PB4
L32	480/277V	1"	SPARE	PB5	PB4
L33	COMMUNICATIONS	1"	FIRE ALARM - NOTIFYING	PB5	PB4
L34	COMMUNICATIONS	1"	FIRE ALARM - SIGNALING	PB5	PB4
L35	208/120V	1"	RECEPTACLES	PB5	PB6
L36	208/120V	1"	SPARE	PB5	PB6
L37	480/277V	1"	EMERGENCY LIGHTS	PB5	PB6
L38	480/277V	1"	SPARE	PB5	PB6
L39	COMMUNICATIONS	1"	FIRE ALARM - NOTIFYING	PB5	PB6
L40	COMMUNICATIONS	1"	FIRE ALARM - SIGNALING	PB5	PB6
L41	208/120V	1"	RECEPTACLES	PB8	PB7
L42	208/120V	1"	SPARE	PB8	PB7
L43	480/277V	1"	EMERGENCY LIGHTS	PB8	PB7

"L" SERIES CONDUIT SCHEDULE

CONDUIT	POWER TYPE	SIZE	SERVES	DESTINATION FROM	DESTINATION TO
L44	480/277V	1"	SPARE	PB8	PB7
L45	COMMUNICATIONS	1"	FIRE ALARM - NOTIFYING	PB8	PB7
L46	COMMUNICATIONS	1"	FIRE ALARM - SIGNALING	PB8	PB7
L47	208/120V	1"	RECEPTACLES	PB2	PB5
L48	208/120V	1"	SPARE	PB2	PB5
L49	480/277V	1"	EMERGENCY LIGHTS	PB2	PB5
L50	480/277V	1"	SPARE	PB2	PB5
L51	COMMUNICATIONS	2"	FIRE ALARM - NOTIFYING	PB2	PB5
L52	COMMUNICATIONS	2"	FIRE ALARM - SIGNALING	PB2	PB5
L53	208/120V	1"	RECEPTACLES	PB5	PB8
L54	208/120V	1"	SPARE	PB5	PB8
L55	480/277V	1"	EMERGENCY LIGHTS	PB5	PB8
L56	480/277V	1"	SPARE	PB5	PB8
L57	COMMUNICATIONS	2"	FIRE ALARM - NOTIFYING	PB5	PB8
L58	COMMUNICATIONS	2"	FIRE ALARM - SIGNALING	PB5	PB8
L59	208/120V	1"	RECEPTACLES	PB9	PB10
L60	208/120V	1"	SPARE	PB9	PB10
L61	480/277V	1"	EMERGENCY LIGHTS	PB9	PB10
L62	480/277V	1"	SPARE	PB9	PB10
L63	COMMUNICATIONS	2"	FIRE ALARM - NOTIFYING	PB9	PB10
L64	COMMUNICATIONS	2"	FIRE ALARM - SIGNALING	PB9	PB10
L65	NOT USED	-	-	-	-
L66	NOT USED	-	-	-	-
L67	NOT USED	-	-	-	-
L68	NOT USED	-	-	-	-
L69	NOT USED	-	-	-	-
L70	NOT USED	-	-	-	-
L71	NOT USED	-	-	-	-
L72	NOT USED	-	-	-	-
L73	208/120V	1"	CARD READER POWER	PB9	PB10
L74	COMMUNICATIONS	1"	CARD READER SIGNAL	PB9	PB10
L75	208/120V	1"	CARD READER POWER	PB8	PB9
L76	208/120V	1"	RECEPTACLES	PB8	PB9
L77	208/120V	1"	SPARE	PB8	PB9
L78	480/277V	1"	LIGHTS	PB8	PB9
L79	480/277V	1"	SPARE	PB8	PB9
L80	COMMUNICATIONS	2"	FIRE ALARM - NOTIFYING	PB8	PB9
L81	COMMUNICATIONS	2"	FIRE ALARM - SIGNALING	PB8	PB9
L82	NOT USED	-	-	-	-
L83	COMMUNICATIONS	1"	SPARE	PB8	PB9
L84	COMMUNICATIONS	1"	SPARE	PB8	PB7
L85	NOT USED	-	-	-	-
L86	COMMUNICATIONS	1"	SPARE	PB9	PB10

"L" SERIES CONDUIT SCHEDULE

CONDUIT	POWER TYPE	SIZE	SERVES	DESTINATION FROM	DESTINATION TO
L87	NOT USED	-	-	-	-
L88	208/120V	1"	SUMP PUMP	PB5	ESCMR
L89	208/120V	1"	CARD READER POWER	PB5	ESCMR
L90	COMMUNICATIONS	1"	CARD READER SIGNAL	PB5	ESCMR
L91	COMMUNICATIONS	1"	SPARE	PB5	ESCMR
L92	COMMUNICATIONS	1"	SPARE	PB5	PB4
L93	COMMUNICATIONS	1"	SPARE	PB5	PB6
L94	208/120V	1"	CAMERA POWER	PB8	PB10
L95	NOT USED	-	-	-	-
L96	COMMUNICATIONS	1"	SPARE	PB2	PB5
L97	NOT USED	-	-	-	-
L98	208/120V	1"	SPARE	PB2	PB5
L99	NOT USED	-	-	-	-
L100	COMMUNICATIONS	1"	SPARE	PB2	PB3
L101	COMMUNICATIONS	1"	SPARE	PB2	PB1
L102	COMMUNICATIONS	1"	SPARE	START	PB2
L103	208/120V	1"	SUMP POWER	START	PB5
L104	208/120V	1"	CAMERA POWER	START	PB2
L105	208/120V	1"	CARD READER POWER	START	PB5
L106	COMMUNICATIONS	1"	CARD READER SIGNAL	START	PB5
L107	208/120V	1"	SPARE	PB2	PB5
L108	NOT USED	-	-	-	-
L109	480/277V	1"	SPARE	PB8	PB10
L110	208/120V	1"	SPARE	START	PB2
L111	NOT USED	-	-	-	-
L112	480/277V	1"	SPARE	START	PB5
L113	208/120V	1"	SPARE	PB5	PB8
L114	COMMUNICATIONS	1"	SPARE	PB5	PB8
L115	480/277V	1"	SPARE	PB5	PB8
L116	COMMUNICATIONS	1"	CARD READER SIGNAL	PB5	PB9
L117	208/120V	1"	CARD READER POWER	PB5	PB8
L118	480/277V	1"	NORMAL LIGHTS	START	PB2
L119	480/277V	1"	NORMAL LIGHTS	PB2	PB1
L120	480/277V	1"	NORMAL LIGHTS	PB2	PB3
L121	480/277V	1"	NORMAL LIGHTS	PB2	PB5
L122	480/277V	1"	EMERGENCY LIGHTS	PB5	PB4
L123	480/277V	1"	NORMAL LIGHTS	PB5	PB6
L124	480/277V	1"	NORMAL LIGHTS	PB5	PB8
L125	480/277V	1"	NORMAL LIGHTS	PB8	PB7
L126	480/277V	1"	EMERGENCY LIGHTS	PB8	PB9
L127	NOT USED	-	-	-	-
L128	COMMUNICATIONS	1"	SPEAKERS	CHASE	VS-TOT
L129	208/120V	1"	RECEPTACLES	CHASE	VS-TOT

PB = PULL BOX
ESC = ESCALATOR
ESCMR = ESCALATOR MACHINE ROOM
CR = CARD READER
VS = VERTICAL SHAFT IN ELEVATOR WALL STARTS AT BOTTOM OF SHAFT ENDS AT TOP.
FLOOR BOX = FLUSH FLOOR RECEPTACLE

CL = CONCOURSE LEVEL
TOT = TOP OF TOWER

NO.	DATE	DESCRIPTION

REVISIONS

THE PREPARATION OF THIS DOCUMENT HAS BEEN FINANCED IN PART THROUGH A GRANT FROM THE FEDERAL TRANSIT ADMINISTRATION, U.S. DEPARTMENT OF TRANSPORTATION, UNDER THE URBAN MASS TRANSPORTATION ACT OF 1964, AS AMENDED, FOR THE PORT AUTHORITY OF ALLEGHENY COUNTY, PENNSYLVANIA.

COMMONWEALTH OF PENNSYLVANIA REGISTERED PROFESSIONAL DAVID P. HARRIS ENGINEER
SIGNATURE

DMJM HARRIS | AECOM
FOUR GATEWAY CENTER
20TH FLOOR
PITTSBURGH, PA. 15222
APPROVED DATE 2/1/08

DESIGNED	LM, GF, MA
DRAWN	CM
CHECKED	WT
IN CHARGE	DPH
DATE	FEB 1, 2008
SCALE	1/8" = 1'-0"

PORT AUTHORITY OF ALLEGHENY COUNTY
PITTSBURGH PENNSYLVANIA

NORTH SHORE CONNECTOR
GATEWAY STATION SHELL
CONDUIT SCHEDULE (1 OF 2)

Port Authority

CONTRACT NO. NSC-004 R
DWG.NO. TN590 SHT. 165

2/4/2008 1:02:42 PM
n:\usefs\mdl\gr\gr c&c\tunnel conduit route plan\044n590dgn

"L" SERIES CONDUIT SCHEDULE

CONDUIT	POWER TYPE	SIZE	SERVES	DESTINATION FROM	DESTINATION TO
L130	480/277V	1"	LIGHTING	CHASE	VS-CL
L131	480/277V	1"	EMERGENCY LIGHTS	CHASE	VS-CL
L132	COMMUNICATIONS	1"	CAMERA SIGNAL	CHASE	VS-TOT
L133	208/120V	1"	CAMERA POWER	CHASE	VS-TOT
L134	480/277V	1"	SIGNAGE	CHASE	VS-TOT
L135	208/120V	1"	FUTURE TURNSTILE	CHASE	VS-CL
L136	208/120V	1"	FUTURE TURNSTILE	CHASE	VS-CL
L137	208/120V	1"	FUTURE TICKETING	CHASE	VS-CL
L138	208/120V	2"	FUTURE TICKETING	CHASE	VS-CL
L139	COMMUNICATIONS	1"	FIRE ALARM SIGNAL	CHASE	VS-TOT
L140	COMMUNICATIONS	1"	FIRE ALARM SIGNAL	CHASE	VS-TOT
L141	COMMUNICATIONS	1"	FIRE ALARM NOTIFYING	CHASE	VS-CL
L142	COMMUNICATIONS	1"	FIRE ALARM NOTIFYING	CHASE	VS-CL
L143	COMMUNICATIONS	1"	FIRE ALARM	CHASE	VS-TOT
L144	COMMUNICATIONS	1"	FIRE ALARM	CHASE	VS-TOT
L145	480/277V	1"	SPARE	CHASE	VS-TOT
L146	208/120V	1"	SPARE	CHASE	VS-TOT
L147	COMMUNICATIONS	1"	SPARE	CHASE	VS-TOT
L148	COMMUNICATIONS	2"	FIRE ALARM NOTIFYING	CHASE	VS-TOT
L149	COMMUNICATIONS	2"	FIRE ALARM SIGNAL	CHASE	VS-TOT
L150	208/120V	1"	RECEPTACLES	PB5	PB4
L151	208/120V	1"	RECEPTACLES	PB8	PB7
L152	NOT USED	–	–	–	–
L153	208/120V	1"	CAMERA	PB5	PB8
L154	COMMUNICATIONS	1"	SPARE	PB2	PB5
L155	208/120V	1"	SPARE	PB8	PB10
L156	480/277V	1"	NORMAL	PB9	PB10
L157	COMMUNICATIONS	1"	SPARE	START	PB10
L158	480/277V	1"	LIGHTS	PB5	ESCMR
L159	208/120V	1"	RECEPTACLES	PB2	PB3
L160	480/277V	1"	LIGHTING	CHASE	VS-TOT
L161	480/277V	1"	EMERGENCY LIGHTING	CHASE	VS-TOT

PB = PULL BOX
ESC = ESCALATOR
ESCMR = ESCALATOR MACHINE ROOM
CR = CARD READER
VS = VERTICAL SHAFT IN ELEVATOR WALL STARTS AT BOTTOM OF SHAFT ENDS AT TOP.
FLOOR BOX = FLUSH FLOOR RECEPTACLE
CHASE = ELECTRICAL CHASE BETWEEN EXISTING LOOP AND NEW CUT-AND-COVER TUNNEL
CL = CONCOURSE LEVEL
TOT = TOP OF TOWER

"M" SERIES CONDUIT SCHEDULE

CONDUIT	SIZE	SERVES	DESTINATION FROM	DESTINATION TO
M7	4"	DAMPERS 104 & 105	CHASE	PB 13
M8	4"	DAMPERS 106 & 107	CHASE	PB 13
M9	4"	SPARE	CHASE	PB 13
M10	4"	DAMPERS 108 & 109	CHASE	PB 14
M11	4"	DAMPERS 110 & 111	CHASE	PB 15
M12	4"	SPARE	CHASE	PB 14
M13	4"	SPARE	CHASE	PB 15
M14	4"	101 & 102 SUMP POWER	CHASE	PB 20
M15	4"	DAMPER 112 & 113 POWER	CHASE	PB 20
M16	4"	101 & 102 SUMP & DAMPER 112 & 113 CONTROL	CHASE	PB 20
M17	4"	SPARE	CHASE	PB 20
M18	4"	LEFT TUNNEL EMERGENCY / MAINTENANCE LIGHTING	CHASE	PB 19
M19	4"	SPARE	CHASE	PB 19
M20	4"	RIGHT TUNNEL EMERGENCY / MAINTENANCE LIGHTING	CHASE	PB 17
M21	4"	SPARE	CHASE	PB 17
M22	4"	FAN 101 POWER	CHASE	PB 11
M23	4"	FAN 101 POWER	CHASE	PB 11
M24	4"	SPARE	CHASE	PB 11
M25	4"	FAN 102 POWER	CHASE	PB 12
M26	4"	FAN 102 POWER	CHASE	PB 12
M27	4"	SPARE	CHASE	PB 12
M28	4"	COMMUNICATIONS	CHASE	PB 11A
M29	4"	FAN 101, 102, 103 POWER AND CONTROL	CHASE	PB 12A
M30	4"	SPARE	CHASE	PB 11A
M31	4"	SPARE	CHASE	PB 12A

"G" SERIES CONDUIT SCHEDULE

CONDUIT	SIZE	SERVES	DESTINATION FROM	DESTINATION TO
G1	4"	TRACK CIRCUITS 6011 N TRACK CIRCUITS 6012 N	CHASE	DETAIL 1-TN588
G2	4"	TRACK CIRCUITS CS 6013 TRACK CIRCUITS 6014 N	CHASE	DETAIL 1-TN588
G3	4"	TRACK CIRCUITS 6017 N TRACK CIRCUITS 6020 N	CHASE	DETAIL 1-TN588
G4	4"	TRACK CIRCUITS 60 TRACK CIRCUITS 6021 N	CHASE	DETAIL 1-TN588
G5	4"	SIGNALS 6011 N, 6012 N, 6014 N	CHASE	DETAIL 1-TN588
G6	4"	SIGNALS 6017 N, 6020 N, 6021 N	CHASE	DETAIL 1-TN588
G7	4"	STROBE LIGHTS	CHASE	DETAIL 1-TN588
G8	4"	SIGNALS 1011 N TRACK CIRCUITS 1011 N	CHASE	DETAIL 1-TN588
G9	4"	SPARE	CHASE	DETAIL 1-TN588
G10	4"	SPARE	CHASE	DETAIL 1-TN588
G11	3"	EMERGENCY PHONE (LEFT TRACK)	CHASE	PB 18
G12	3"	BLUE LIGHT POWER (LEFT TRACK)	CHASE	PB 19
G13	3"	FIBER OPTIC (LEFT TRACK)	CHASE	PB 18
G14	3"	EMERGENCY PHONE (RIGHT TRACK)	CHASE	PB 16
G15	3"	BLUE LIGHT POWER (RIGHT TRACK)	CHASE	PB 17
G16	3"	FIBER OPTIC (RIGHT TRACK)	CHASE	PB 16
G17	3"	SPARE (LEFT TRACK)	CHASE	PB 19
G18	3"	SPARE (LEFT TRACK)	CHASE	PB 18
G19	3"	SPARE (RIGHT TRACK)	CHASE	PB 17
G20	3"	SPARE (RIGHT TRACK)	CHASE	PB 16
G21	3"	SPEAKERS POLE 1	CHASE	PB 2
		SPEAKERS POLE 2		
		EMERGENCY PHONE POLE 1		
G22	3"	SPEAKERS POLE 3	CHASE	PB 5
		SPEAKERS POLE 4		
		CCTV POLE 3		
		AMB. NOISE SEN. POLE 4		
G23	3"	SPEAKERS POLE 5	CHASE	PB 8
		CCTV POLE 5		
		EMERGENCY PHONE POLE 5		
G24	3"	SPEAKER POLE 9	CHASE	PB 10
		CCTV POLE 9		
G25	2"	LIGHT POST	PB2	PB1
G26	2"	LIGHT POST	PB2	PB3
G27	2"	LIGHT POST	PB5	PB4
G28	2"	LIGHT POST	PB5	PB6
G29	2"	LIGHT POST	PB8	PB7
G30	3"	SPARE	CHASE	VS-TOT

NO.	DATE	DESCRIPTION

REVISIONS

THE PREPARATION OF THIS DOCUMENT HAS BEEN FINANCED IN PART THROUGH A GRANT FROM THE FEDERAL TRANSIT ADMINISTRATION, U.S. DEPARTMENT OF TRANSPORTATION, UNDER THE URBAN MASS TRANSPORTATION ACT OF 1964, AS AMENDED. FOR THE PORT AUTHORITY OF ALLEGHENY COUNTY, PENNSYLVANIA.

COMMONWEALTH OF PENNSYLVANIA REGISTERED PROFESSIONAL DAVID P. HARRIS ENGINEER
SIGNATURE

DMJM HARRIS | AECOM
FOUR GATEWAY CENTER
20TH FLOOR
PITTSBURGH, PA. 15222

APPROVED — DATE 2/1/08

DESIGNED	LM, GF, MA
DRAWN	CM
CHECKED	WT
IN CHARGE	DPH
DATE	FEB 1, 2008
SCALE	1/8" = 1'-0"

PORT AUTHORITY OF ALLEGHENY COUNTY
PITTSBURGH PENNSYLVANIA

NORTH SHORE CONNECTOR
GATEWAY STATION SHELL
CONDUIT SCHEDULE (2 OF 2)

Port Authority

CONTRACT NO. NSC-004 R
DWG. NO. TN591 SHT. 166

2/4/2008 10:42 PM
n:\nsf\final\gw\gw cdct\tunnel conduit route plan\0146591.dgn

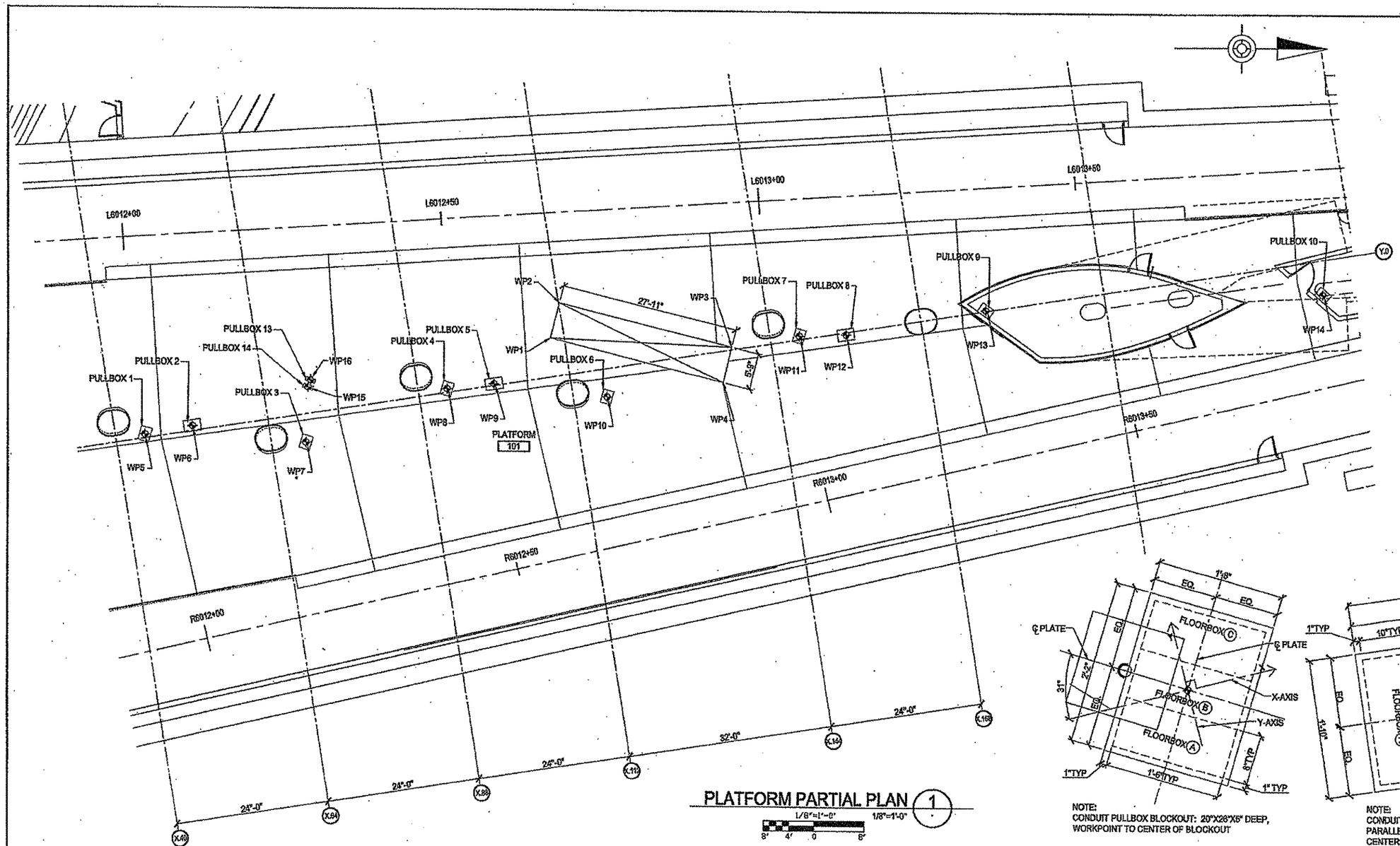

PLATFORM PARTIAL PLAN (1)

1/8"=1'-0"

CONCRETE BLOCKOUT LOCATION WORKPOINTS NSC-004 CONTRACT			
WORKPOINT	TRACK POINT	OFFSET	
WP1	L6012+66.00	R19'-8 1/2"	NOTE 1
WP2	L6012+67.75	R14'-2 3/4"	NOTE 1
WP3	L6012+94.33	R22'-9 1/4"	NOTE 1
WP4	L6012+92.58	R28'-3"	NOTE 1
WP5	L6012+1.46	R31'-3 5/8"	DETAIL 2
WP6	L6012+8.92	R30'-5"	DETAIL 3
WP7	L6012+26.58	R34'-0 1/8"	DETAIL 2
WP8	L6012+49.25	R26'-9 3/4"	DETAIL 2
WP9	L6012+56.63	R26'-5 1/2"	DETAIL 3
WP10	L6012+74.37	R29'-6 1/4"	DETAIL 2
WP11	L6013+6.00	R21'-7 1/4"	DETAIL 2
WP12	L6013+12.46	R21'-9 1/2"	DETAIL 3
WP13	L6013+34.72	R19'-3 1/4"	NOTE 2
WP14	L6013+87.89	R19'-9 3/4"	NOTE 2
WP15	L6012+27.45	R25'-3 1/8"	NOTE 3
WP16	L6012+27.90	R24'-2"	NOTE 3

NOTES:

1. ESCALATOR PIT: 5'-9" X 27'-11"
2. CONDUIT PULLBOX BLOCKOUT: 20"X26"X5" DEEP, WORKPOINT TO CENTER OF BLOCKOUT, HOLD BLOCKOUT ORIENTATION FLUSH TO CONCRETE WALL.
3. CONDUIT PULLBOX BLOCKOUT: 8"X16"X5" DEEP, WORKPOINT TO CENTER OF BLOCKOUT, BLOCKOUT ORIENTATION TO MATCH STAIRCASE EMBED PLATES, SEE AR110 - NOTE 2

NOTE:
CONDUIT PULLBOX BLOCKOUT: 20"X26"X5" DEEP, WORKPOINT TO CENTER OF BLOCKOUT

BLOCKOUT DETAIL (2)

1 1/2"=1'-0"

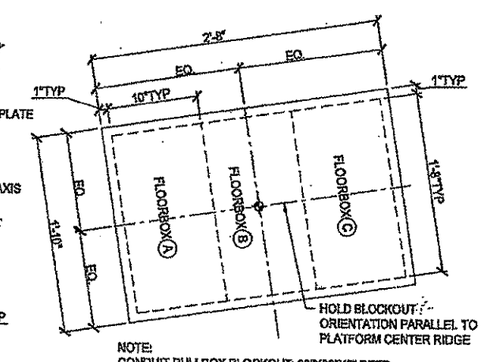

NOTE:
CONDUIT PULLBOX BLOCKOUT: 22"X32"X5" DEEP, PARALLEL TO PLATFORM RIDGE, WORKPOINT TO CENTER OF BLOCKOUT

BLOCKOUT DETAIL (3)

1 1/2"=1'-0"

The light/motion Collaborative
EDGE studio
5411 Penn Avenue
Pittsburgh, PA 15206
tel: 412.441.8225
fax: 412.441.8226

Hartman-A Associates
223 Fourth Avenue
Pittsburgh, PA 15222
tel: 412.471.3470
fax: 412.471.3472

NO.	DATE	DESCRIPTION

REVISIONS

THE PREPARATION OF THIS DOCUMENT HAS BEEN FINANCED IN PART THROUGH A GRANT FROM THE FEDERAL TRANSIT ADMINISTRATION, U.S. DEPARTMENT OF TRANSPORTATION, UNDER THE URBAN MASS TRANSPORTATION ACT OF 1964, AS AMENDED, FOR THE PORT AUTHORITY OF ALLEGHENY COUNTY, PENNSYLVANIA.

REGISTERED ARCHITECT COMMONWEALTH OF PENNSYLVANIA
FEB 1, 2008
SIGNATURE

DMJM HARRIS | AECOM
FOUR GATEWAY CENTER
20TH FLOOR
PITTSBURGH, PA 15222

APPROVED — DATE 2/1/08

DESIGNED	LMT
DRAWN	JMG
CHECKED	MGF
IN CHARGE	DPH
DATE	FEB 1, 2008
SCALE	AS SHOWN

PORT AUTHORITY OF ALLEGHENY COUNTY
PITTSBURGH PENNSYLVANIA

NORTH SHORE CONNECTOR
GATEWAY STATION SHELL

ELECTRICAL BLOCKOUT LOCATION PLAN PLATFORM LEVEL

Port Authority

CONTRACT NO. NSC-004R
DWG. NO. TN592 SHT. 167

ORDINANCE #250 VACATING PORTIONS OF NORTH SHORE DRIVE

+50 OFF. 150'
SAWCUT EXISTING BITUMINOUS PAVING
+50 OFF. 135'
+13 OFF. 135'
TEMPORARY CONST. EASEMENT
+32 OFF. 135'
RELOCATE EXISTING PARKING LOT BOOTH AS SHOWN ON CV108
PENNDOT R/W
BITUMINOUS PARKING LOT REPLACEMENT
REQUIRED EASEMENT LINE
TEMPORARY PAD FOR PROPOSED TRACTION POWER SUBSTATION
CONCRETE ISLAND TO BE REMOVED DURING EXCAVATION
SUBSTATION BUILDING (NSC-009)
+32 OFF. 93.5'
REQUIRED EASEMENT LINE
MATCH LINE DWG. CV106
MATCH LINE DWG. CV108
TERMINAL SECTION +82
BEGIN WORK & PAVING STA. 0+00.09 DRIVEWAY NO. 1
TERMINAL SECTION +63
TERMINAL SECTION +32
TYPE 2-S GUIDE RAIL
TERMINAL SECTION +68
TERMINAL SECTION +10
TYPE 2-S GUIDE RAIL
L6048+00
R6048+00
L6049+00
R6049+00
TUNNEL PORTAL
℄ TRACK "L"
℄ TRACK "R"
+75 OFF. 44'-10"
L6050+00
R6050+00
L6051+00
R6051+00
REMOVE GUIDE RAIL
BITUMINOUS PARKING LOT REPLACEMENT
REMOVE GUIDE RAIL
OPEN BOAT TUNNEL
12'-6" 12'-5"
R20'
R25'
P.T. 36.88
P.C. 0+00.67
N67°21'18"W
+47.99
+13 OFF. 42'
+93 OFF. 42'
REQUIRED EASEMENT LINE
12'
TREE W/ BELG. BLOCK
BELG. BLOCK
+95.45
TREE W/ BELG. BLOCK
209+00
+10 OFF. 11'-11" L
+34 OFF. 11'-11" L
+51 OFF. 11'-9" L
+75 OFF. 11'-9" L
+67.61 OFF. 12'-2"
23'-7"
END WORK & PAVING STA. 0+28.59 DRIVEWAY NO. 1
+28.7
210+00
+79.28 OFF. 0'-2" R
211+00
N87°45'43"W
212+00
REEDSDALE
213+00
STREET
214+00
STA. 209+10.79 REEDSDALE STREET= POE STA. 0+40.61 DRIVEWAY NO. 1
+79.28 OFF. 12'-2" R
CONST. ℄ REEDSDALE STREET
EXISTING CONC. PAVEMENT JOINT
+89 OFF. 11'-11" R
S.R.0065 PIER FOUNDATION, DO NOT DISTURB
S.R.0065 PIER FOUNDATION, DO NOT DISTURB
PENNDOT R/W
LS
WALL
WALL
WALL

LEGEND

BELGIAN BLOCK SURFACING

FOR ROADWAY PROFILES, SEE CV110 - CV112
FOR ROADWAY TYPICALS, SEE CV102 - CV103

NO.	DATE	DESCRIPTION
6	1/20/06	ADDENDUM 6 - DRAWING MODIFIED
3	12/21/05	ADDENDUM 3 - DRAWING MODIFIED

REVISIONS

THE PREPARATION OF THIS DOCUMENT HAS BEEN FINANCED IN PART THROUGH A GRANT FROM THE FEDERAL TRANSIT ADMINISTRATION, U.S. DEPARTMENT OF TRANSPORTATION, UNDER THE URBAN MASS TRANSPORTATION ACT OF 1964, AS AMENDED. FOR THE PORT AUTHORITY OF ALLEGHENY COUNTY, PENNSYLVANIA.

COMMONWEALTH OF PENNSYLVANIA REGISTERED PROFESSIONAL DAVID P. HAINES ENGINEER 1 COPY
SIGNATURE

DMJM HARRIS | AECOM
FOUR GATEWAY CENTER
20TH FLOOR
PITTSBURGH, PA. 15222

APPROVED — DATE 11-2-05

DESIGNED	KS
DRAWN	BH
CHECKED	DH
IN CHARGE	GY
DATE	NOV. 2, 2005
SCALE	20' 15' 10' 5' 0 20'

PORT AUTHORITY OF ALLEGHENY COUNTY
PITTSBURGH PENNSYLVANIA

NORTH SHORE CONNECTOR
NORTH SIDE STATION AND CUT & COVER TUNNEL WEST
ROADWAY PLAN
STA. 6046+00 TO STA. 6051+50 LEFT TRACK

PORT AUTHORITY

CONTRACT NO. NSC-006
DWG. NO. CV107 SHT. 39

1/24/2006 9:08:43 AM
n:\NSF\Inc\W0\W003-006 Addendums\addendum 6\NSC-006 PSE\CV111.dgn

NOTES:

1. FOR GENERAL NOTES, SEE DRAWINGS TN100 & TN101.

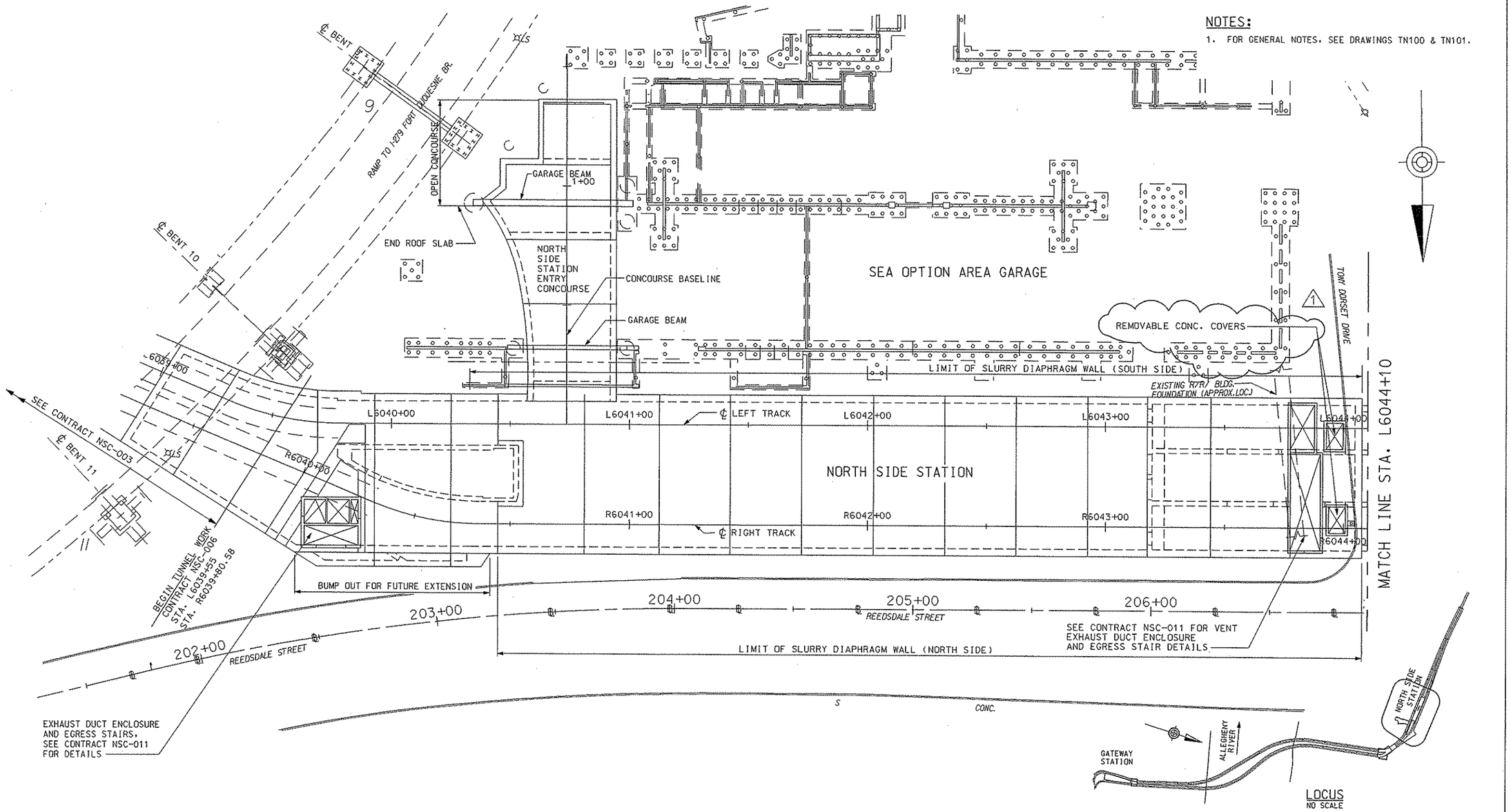

TUNNEL GENERAL PLAN

STA. L6039+55 TO STA. L6044+10

NO.	DATE	DESCRIPTION
1	6/20/08	REVISION 9 - REVISED TRANSFORMER VENT OPENINGS

REVISIONS

THE PREPARATION OF THIS DOCUMENT HAS BEEN FINANCED IN PART THROUGH A GRANT FROM THE FEDERAL TRANSIT ADMINISTRATION, U.S. DEPARTMENT OF TRANSPORTATION, UNDER THE URBAN MASS TRANSPORTATION ACT OF 1964, AS AMENDED, FOR THE PORT AUTHORITY OF ALLEGHENY COUNTY, PENNSYLVANIA.

COMMONWEALTH OF PENNSYLVANIA REGISTERED PROFESSIONAL ENGINEER PETER DENNIS MAURITZ

SIGNATURE

DMJM HARRIS | AECOM
FOUR GATEWAY CENTER
20TH FLOOR
PITTSBURGH, PA. 15222

APPROVED — DATE 6/25/08

DESIGNED	KV
DRAWN	DC
CHECKED	PDM
IN CHARGE	PAR
DATE	NOV. 2, 2005
SCALE	1"= 20'-0" (20' 10' 0 20')

PORT AUTHORITY OF ALLEGHENY COUNTY
PITTSBURGH PENNSYLVANIA

NORTH SHORE CONNECTOR
NORTH SIDE STATION AND CUT & COVER TUNNEL WEST
NORTH SHORE GENERAL PLAN
STA. L6039+55 TO STA. L6044+10

PORT AUTHORITY

CONTRACT NO. NSC-006
DWG. NO. TN600-1 SHT. 52-1

$DATE$ $TIME$
$FILE$

NOTES:

1. FOR GENERAL NOTES, SEE DRAWINGS TN100 & TN101.
2. SEE ST DRAWINGS, FOR DETAILS OF S.R. 65 UNDERPINNING AT BENTS 12 AND 13.

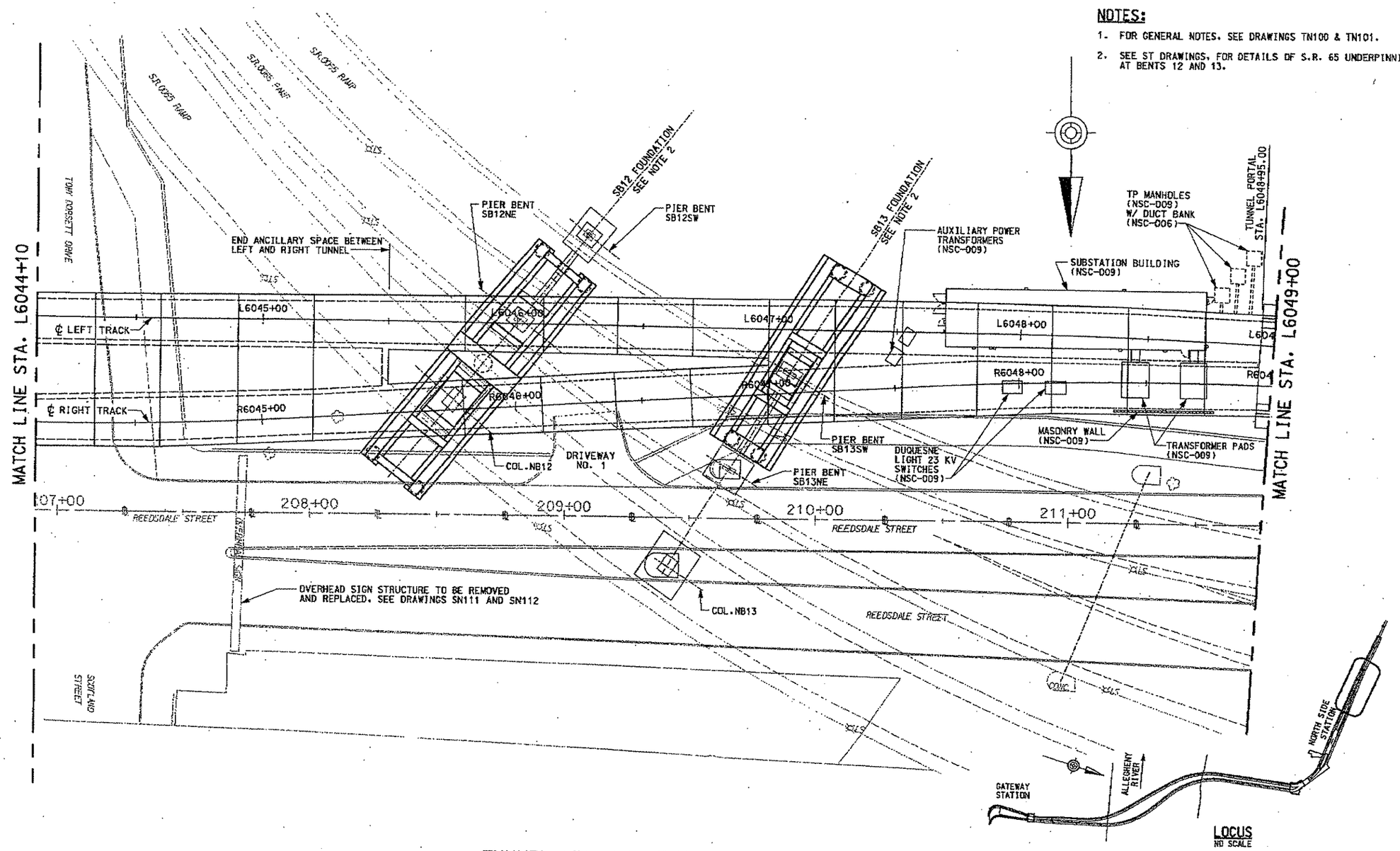

TUNNEL GENERAL PLAN

STA. L6044+10 TO STA. L6049+00

NO.	DATE	DESCRIPTION

REVISIONS

THE PREPARATION OF THIS DOCUMENT HAS BEEN FINANCED IN PART THROUGH A GRANT FROM THE FEDERAL TRANSIT ADMINISTRATION, U.S. DEPARTMENT OF TRANSPORTATION, UNDER THE URBAN MASS TRANSPORTATION ACT OF 1964, AS AMENDED, FOR THE PORT AUTHORITY OF ALLEGHENY COUNTY, PENNSYLVANIA.

COMMONWEALTH OF PENNSYLVANIA REGISTERED PROFESSIONAL ENGINEER PETER DENNIS MAURITZ PE071163

SIGNATURE

DMJM HARRIS | AECOM

FOUR GATEWAY CENTER
20TH FLOOR
PITTSBURGH, PA. 15222

APPROVED

11-2-05
DATE

DESIGNED	KV
DRAWN	DC
CHECKED	PDM
IN CHARGE	PAR
DATE	NOV. 2, 2005
SCALE	1"= 20'-0"

20' 10' 0 20'

PORT AUTHORITY OF ALLEGHENY COUNTY
PITTSBURGH PENNSYLVANIA

NORTH SHORE CONNECTOR
NORTH SIDE STATION AND CUT & COVER TUNNEL WEST
NORTH SHORE GENERAL PLAN
STA. L6044+10 TO STA. L6049+00

PORT AUTHORITY

CONTRACT NO. NSC-006
DWG. NO. TN601 SHT. 53

10/26/2005 5:12:[illegible] AM
m:\NSF\Eng\CPM\NS C&C\06tn600.dgn

NOTES:

1. FOR GENERAL NOTES, SEE DRAWINGS TN100 & TN101.

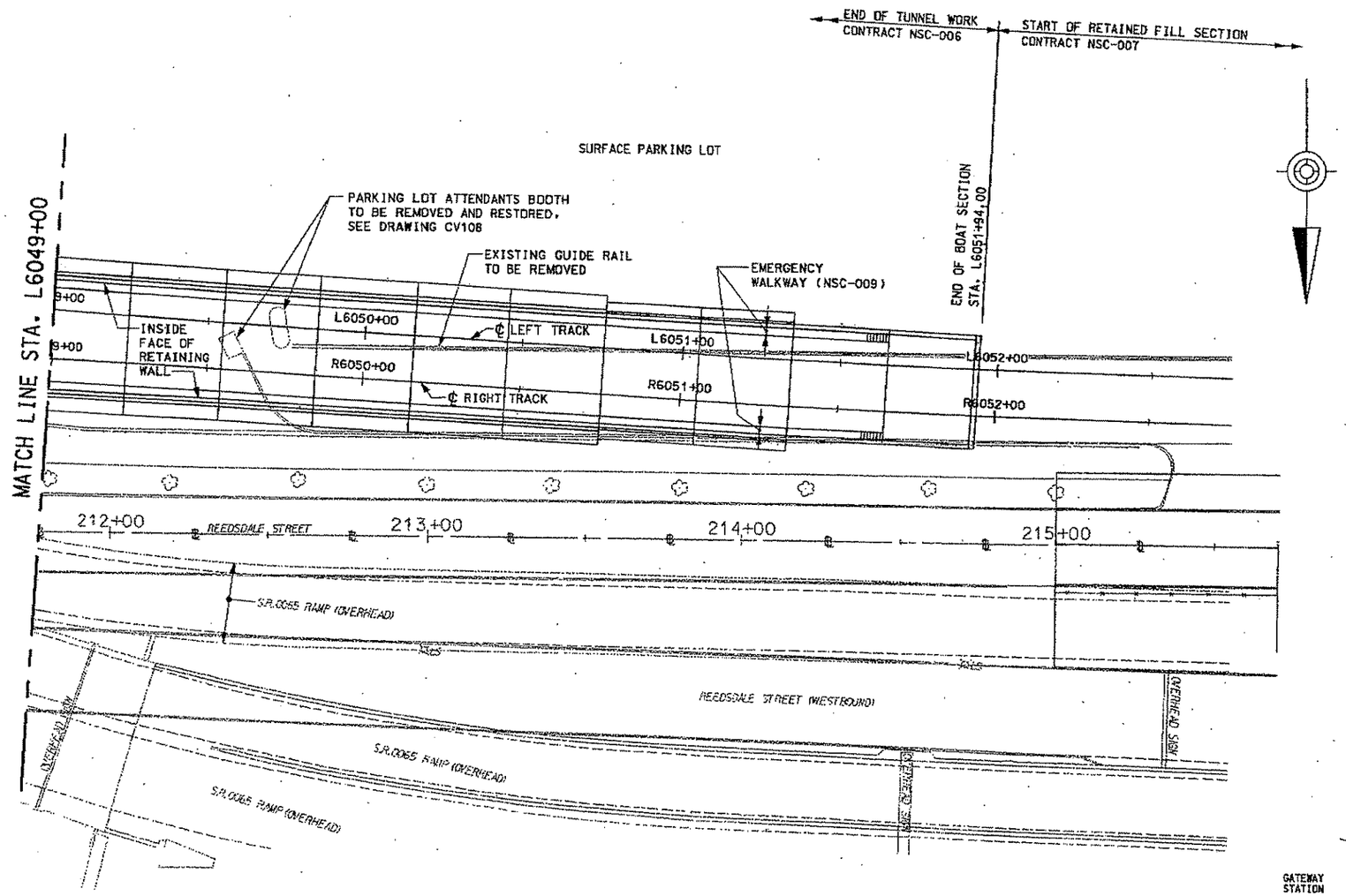

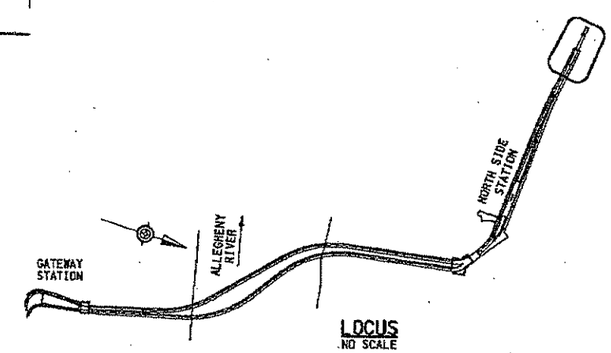

LOCUS
NO SCALE

TUNNEL GENERAL PLAN

STA. L6049+00 TO STA. L6051+94

NO.	DATE	DESCRIPTION

REVISIONS

THE PREPARATION OF THIS DOCUMENT HAS BEEN FINANCED IN PART THROUGH A GRANT FROM THE FEDERAL TRANSIT ADMINISTRATION, U.S. DEPARTMENT OF TRANSPORTATION, UNDER THE URBAN MASS TRANSPORTATION ACT OF 1964, AS AMENDED, FOR THE PORT AUTHORITY OF ALLEGHENY COUNTY, PENNSYLVANIA.

REGISTERED PROFESSIONAL PETER DENNIS MAURITZ ENGINEER PE071163 PENNSYLVANIA

SIGNATURE

DMJM HARRIS | AECOM
FOUR GATEWAY CENTER
20TH FLOOR
PITTSBURGH, PA. 15222

APPROVED — 11-2-05 DATE

DESIGNED	KM
DRAWN	DC
CHECKED	PDM
IN CHARGE	PAR
DATE	NOV. 2, 2005
SCALE	1"= 20'-0" (20' 10' 0 20')

PORT AUTHORITY OF ALLEGHENY COUNTY
PITTSBURGH PENNSYLVANIA

NORTH SHORE CONNECTOR
NORTH SIDE STATION AND CUT & COVER TUNNEL WEST
NORTH SHORE GENERAL PLAN
STA. L6049+00 TO STA. L6051+94.00

PORT AUTHORITY

CONTRACT NO. NSC-006
DWG. NO. TN502 SHT. 54

10/26/2005 14:30
n:\nsc\t\pw\gw\ns c&c\06tn502.dgn

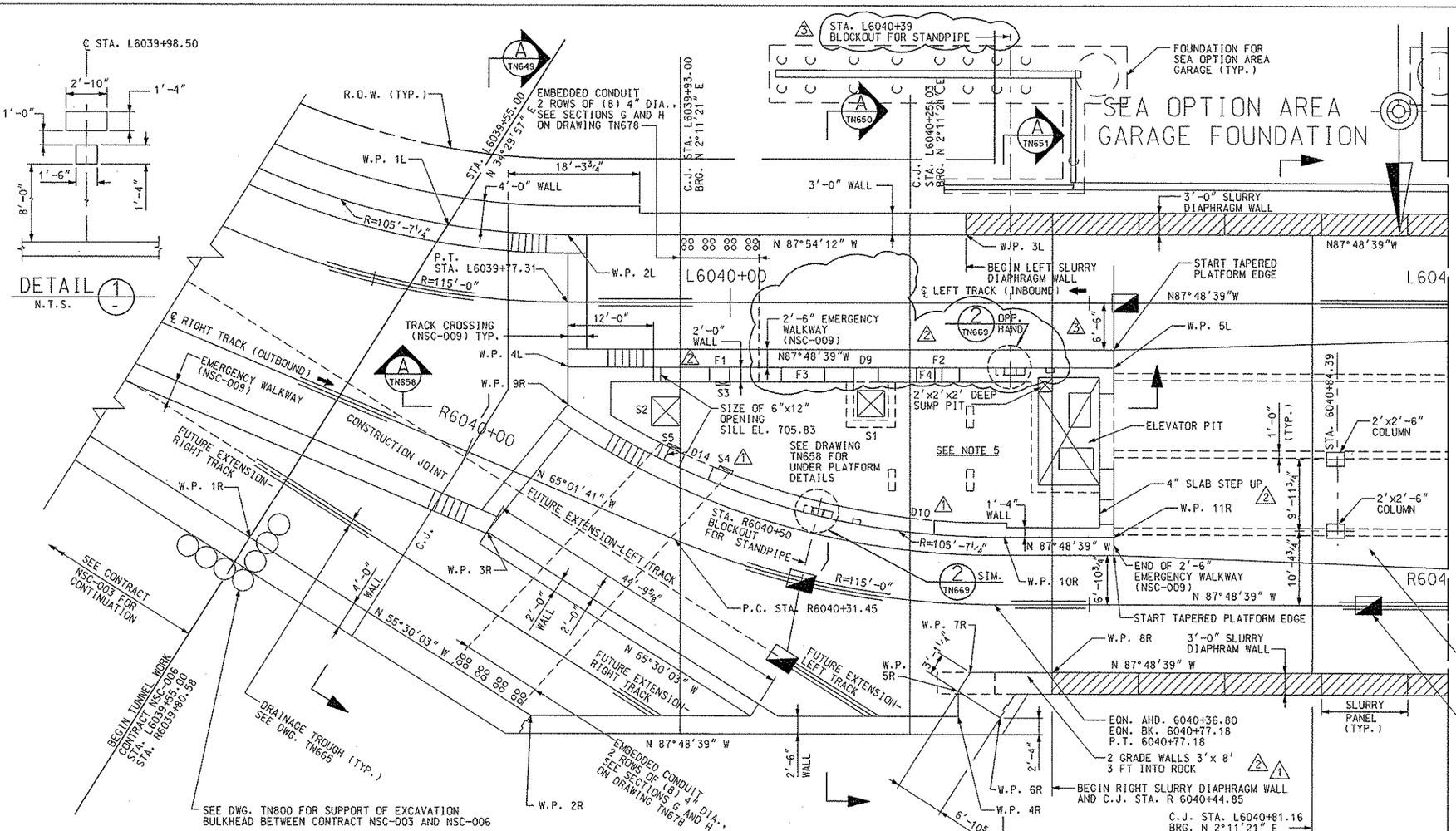

NOTES:

1. FOR GENERAL NOTES, SEE DRAWINGS TN100 & TN101.
2. SEE DRAWINGS TN642 TO TN645, FOR ELEVATION OF SLURRY DIAPHRAGM WALLS.
3. SEE DRAWING TN653 FOR SIZE AND SPACING OF SLAB TIE DOWN ANCHORS.
4. SEE PL DRAWINGS FOR LOCATION AND DETAILS OF TRACK DRAINAGE.
5. AT FLOOR DRAINS INDICATED ON THE PLUMBING DRAWINGS, PITCH TO DRAIN BY LOWERING THE TOP OF SLAB AT THE DRAIN ONE (1) INCH AND PROVIDE POSITIVE DRAINAGE AT THE RADIUS TOLERANCE ALLOW.

W.P.	STATION	OFFSET
1L	L6039+58.99	9'-4¾" LEFT
2L	L6039+77.31	9'-4¾" LEFT
3L	L6040+32.85	9'-6" LEFT
4L	L6039+77.31	9'-0" RIGHT
5L	L6040+53.42	9'-0" RIGHT
1R	R6039+76.75	22'-9⅞" RIGHT
2R	R6040+22.44	30'-5⅞" RIGHT
3R	R6040+06.92	9'-2½" RIGHT
4R	R6040+72.77	15'-9 " RIGHT
5R	R6040+72.65	12'-2⅞" RIGHT
6R	R6040+37.61	15'-9⅞" RIGHT
7R	R6040+74.09	9'-6¾" RIGHT
8R	R6040+44.85	9'-6⅛" RIGHT
9R	R6040+10.40	11'-6¼" LEFT
10R	R6040+38.11	9'-4¾" LEFT
11R	R6040+53.42	9'-4¾" LEFT

2

DOOR OPENING TABLE

NO.	R.O. WIDTH	LOCATION
D9	3'-4½"	L6040+18.88
D10	3'-4½"	L6040+26.42
D14	4'-4½"	L6039+95.64

NOTE: ROUGH OPENING HGT. 7'-2½" A.F.F. TYP. U.O.N. DOOR OPENING STA GIVEN TO CENTER OF ROUGH OPENING.

1

PLATFORM SLAB OPENING

NO.	SIZE	STATION
S1	3'-10"L x 3'-8"W	L6040+19.541 14'-0" RIGHT
S2	4'-0" x 4'-0"	L6039+91.00 15'-2⅛" RIGHT
S3	6" x 2'-0"	L6039+98.89 11'-3" RIGHT
S4	6" x 2'-0"	R6040+34.49 11'-7¾" LEFT
S5	6" x 2'-0"	R6040+26.42 11'-9⅜" LEFT

1

FAN ROOM OPENINGS ABOVE ANCILLARY SLAB

#	SIZE	LOCATION	SILL ELEVATION
F1	18"Wx16"H, 12" WALL, 34"Wx16"H WALL FAN R.O.	STA. L6039+98.50	8'-0", SEE DETAIL 1
F2	12"x6" WALL FAN R.O.	STA. L6040+29.00	ELEV. 701.12
F3*	6'x6' WALL FAN R.O.	STA. L6040+10.00	3'-0" MAX. ABOVE FLOOR
F4*	6'x6' WALL FAN R.O.	STA. L6040+29.00	3'-0" MAX. ABOVE FLOOR

* FRAMED/SQUARE

2 3

PLAN @ TRACK LEVEL

STA. L6039+55 TO STA. L6041+00
STA. R6039+80.58 TO STA. R6041+00

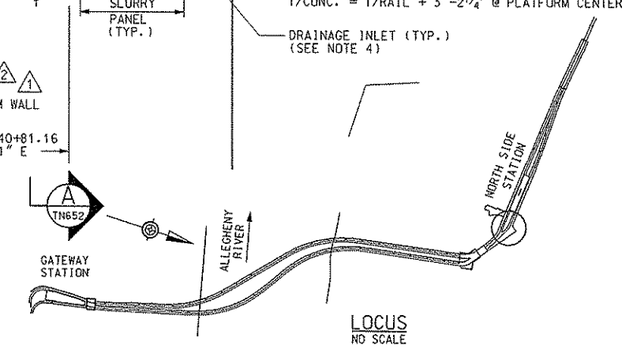

LOCUS
NO SCALE

NO.	DATE	DESCRIPTION
9	6/22/08	REVISION 9 – REVISION TO WALL OPENINGS
8	5/09/08	REVISION 8 – SEA GARAGE REVISIONS & WALL OPNGS
6	1/27/08	REVISION 6 – SEA GARAGE REVISIONS

REVISIONS

THE PREPARATION OF THIS DOCUMENT HAS BEEN FINANCED IN PART THROUGH A GRANT FROM THE FEDERAL TRANSIT ADMINISTRATION, U.S. DEPARTMENT OF TRANSPORTATION, UNDER THE URBAN MASS TRANSPORTATION ACT OF 1964, AS AMENDED. FOR THE PORT AUTHORITY OF ALLEGHENY COUNTY, PENNSYLVANIA.

COMMONWEALTH OF PENNSYLVANIA REGISTERED PROFESSIONAL PETER DENNIS MAURITZ ENGINEER 027703

SIGNATURE

DMJM HARRIS | AECOM
FOUR GATEWAY CENTER
20TH FLOOR
PITTSBURGH, PA. 15222

APPROVED — DATE 6/27/08

DESIGNED	KV
DRAWN	DC
CHECKED	PDM
IN CHARGE	PAR
DATE	NOV. 2, 2005
SCALE	1/8"=1'-0"

8' 4' 0 8'

PORT AUTHORITY OF ALLEGHENY COUNTY
PITTSBURGH PENNSYLVANIA

NORTH SHORE CONNECTOR
NORTH SIDE STATION AND CUT & COVER TUNNEL WEST
PLAN @ TRACK LEVEL
STA L6039+55 TO STA. L6041+00

PORT AUTHORITY

CONTRACT NO. NSC-006
DWG. NO. TN610-3 SHT. 55-2

$DATE$ $TIME$
$FILE$

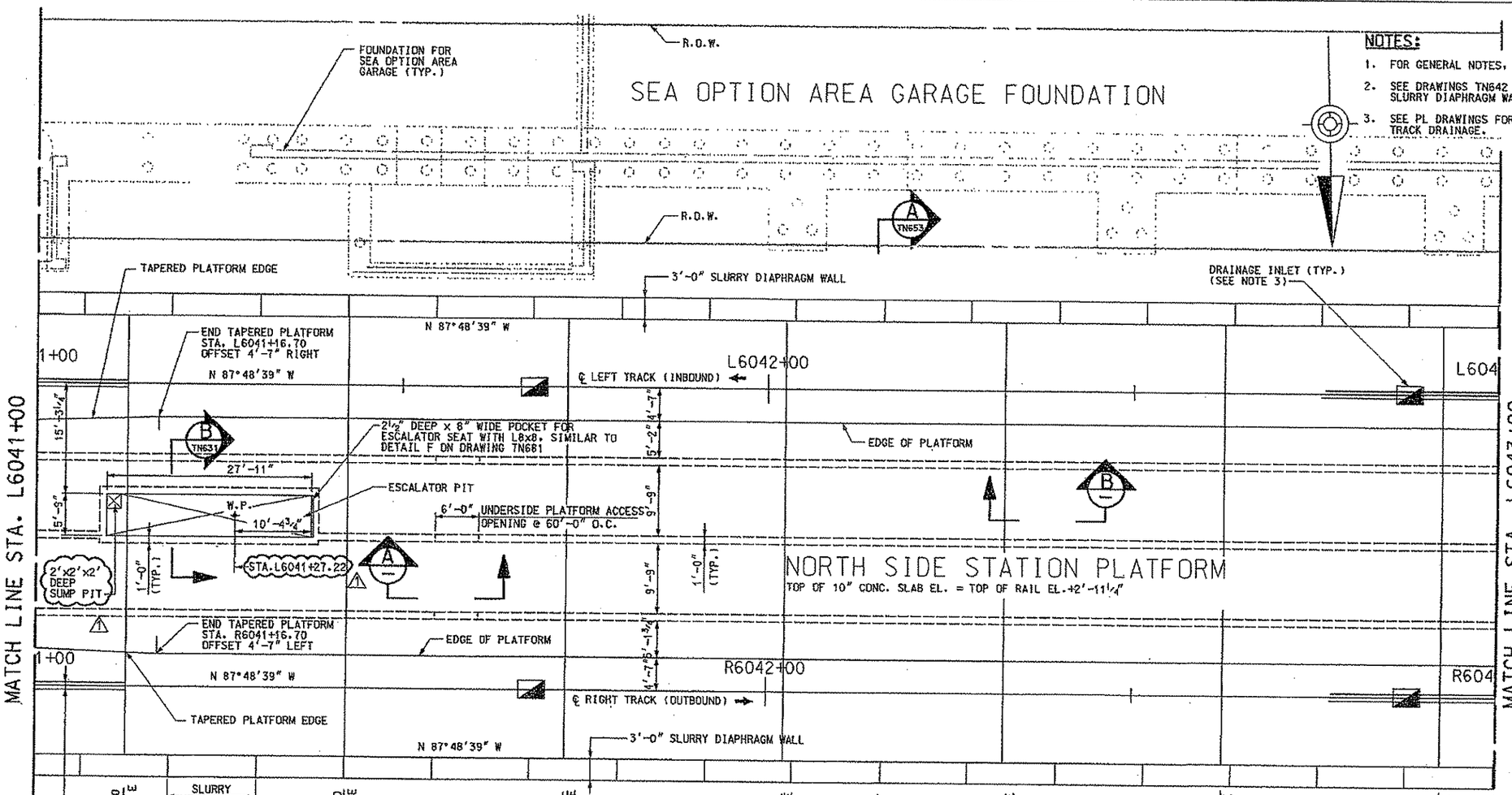

NOTES:

1. FOR GENERAL NOTES, SEE DRAWINGS TN100 & TN101.
2. SEE DRAWINGS TN642 TO TN645, FOR ELEVATION OF SLURRY DIAPHRAGM WALLS.
3. SEE PL DRAWINGS FOR LOCATION AND DETAILS OF TRACK DRAINAGE.

PLAN @ TRACK LEVEL

STA. L6041+00 TO STA. L6043+00
STA. R6041+00 TO STA. R6043+00

SCALE: 1/8"=1'-0"

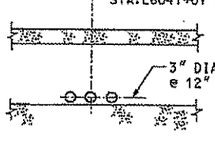

OUTER PLATFORM WALL SLEEVES (B)

NTS

ACCESS OPENINGS:

LOCATE CENTERLINE ACCESS OPENINGS AT:
STA. L6040+97.50, STA. L6041+57.50, STA. L6042+17.50 AND STA. L6042+77.50 (TYP. EACH WALL)

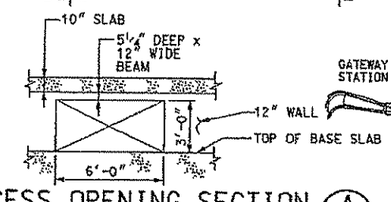

UNDER PLATFORM ACCESS OPENING SECTION (A)

NTS

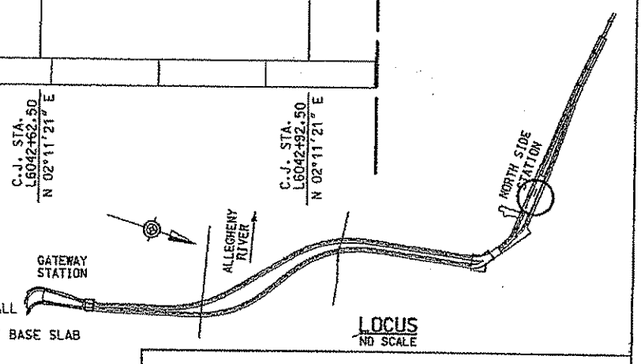

LOCUS
NO SCALE

NO.	DATE	DESCRIPTION
6	1/27/08	REVISION 6 – REVISED ESCALATOR AND SUMP

REVISIONS

THE PREPARATION OF THIS DOCUMENT HAS BEEN FINANCED IN PART THROUGH A GRANT FROM THE FEDERAL TRANSIT ADMINISTRATION, U.S. DEPARTMENT OF TRANSPORTATION, UNDER THE URBAN MASS TRANSPORTATION ACT OF 1964, AS AMENDED. FOR THE PORT AUTHORITY OF ALLEGHENY COUNTY, PENNSYLVANIA.

REGISTERED PROFESSIONAL ENGINEER PETER DENNIS MAURITZ
SIGNATURE

DMJM HARRIS | AECOM
FOUR GATEWAY CENTER
20TH FLOOR
PITTSBURGH, PA. 15222
APPROVED — DATE 1/31/08

DESIGNED	KV
DRAWN	DC
CHECKED	PDM
IN CHARGE	PAR
DATE	NOV. 2, 2005
SCALE	AS SHOWN

PORT AUTHORITY OF ALLEGHENY COUNTY
PITTSBURGH PENNSYLVANIA

NORTH SHORE CONNECTOR
NORTH SIDE STATION AND CUT & COVER TUNNEL WEST
PLAN @ TRACK LEVEL
STA. L6041+00 TO STA. L6043+00

PORT AUTHORITY

CONTRACT NO. NSC-006
DWG. NO. TN611-1 SHT. 56-1

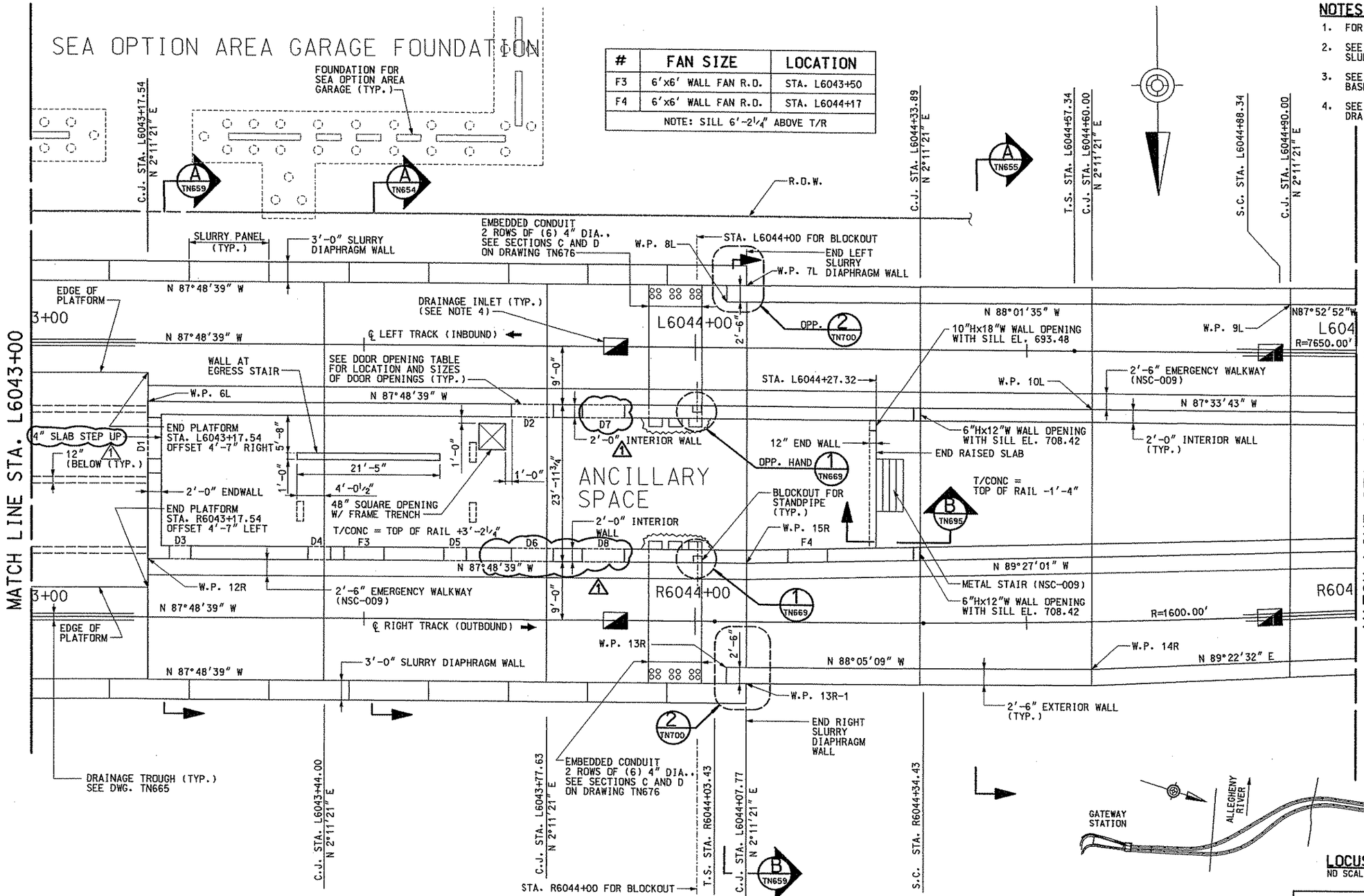

#	FAN SIZE	LOCATION
F3	6'x6' WALL FAN R.O.	STA. L6043+50
F4	6'x6' WALL FAN R.O.	STA. L6044+17
NOTE: SILL 6'-2¼" ABOVE T/R		

NOTES:

1. FOR GENERAL NOTES, SEE DRAWINGS TN100 & TN101.
2. SEE DRAWINGS TN642 TO TN645, FOR ELEVATION OF SLURRY DIAPHRAGM WALLS.
3. SEE DRAWING TN653 FOR SIZE AND SPACING OF BASE SLAB TIEDOWNS.
4. SEE PL DRAWINGS FOR LOCATION AND DETAILS OF TRACK DRAINAGE.

DOOR OPENING TABLE

#	R.O. WIDTH	LOCATION
D1	6'-4½" HT 7'-6½"	STA. L6043+17.54 14'-8" RIGHT
D2	6'-4½"	STA. L6043+75.39
D3	3'-4½"	STA. R6043+22.35
D4	3'-4½"	STA. R6043+43.33
D5	3'-4½"	STA. R6043+63.68
D6	6'-4½"	STA. R6043+75.39
D7	6'-4½"	STA. L6043+86.16
D8	6'-4½"	STA. R6043+86.16
NOTE: DOOR HGT. 7'-2½" TYP. U.O.N. DOOR OPENING GIVEN TO CENTER OF ROUGH OPENING.		

W.P.	STATION	OFFSET
6L	L6043+17.54	9'-0" RIGHT
7L	L6044+07.77	9'-6" LEFT
8L	L6044+04.77	7'-0" LEFT
9L	L6044+90.00	7'-4" LEFT
10L	L6044+60.00	9'-0" RIGHT
12R	R6043+17.54	9'-0" LEFT
13R	R6044+04.77	7'-0" RIGHT
13R-1	R6044+07.77	9'-6⅙" RIGHT
14R	R6044+59.82	7'-3½" RIGHT
15R	R6044+07.77	9'-0" LEFT

PLAN @ TRACK LEVEL

STA. L6043+00 TO STA. L6045+00
STA. R6043+00 TO STA. R6045+00

NO.	DATE	DESCRIPTION
1	5/09/08	REVISION 8 – MODIFIED DOOR SIZE AND LOCATION

REVISIONS

THE PREPARATION OF THIS DOCUMENT HAS BEEN FINANCED IN PART THROUGH A GRANT FROM THE FEDERAL TRANSIT ADMINISTRATION, U.S. DEPARTMENT OF TRANSPORTATION, UNDER THE URBAN MASS TRANSPORTATION ACT OF 1964, AS AMENDED, FOR THE PORT AUTHORITY OF ALLEGHENY COUNTY, PENNSYLVANIA.

COMMONWEALTH OF PENNSYLVANIA REGISTERED PROFESSIONAL ENGINEER PETER DENNIS MAURITZ

SIGNATURE

DMJM HARRIS | AECOM
FOUR GATEWAY CENTER
20TH FLOOR
PITTSBURGH, PA. 15222

APPROVED — DATE 5/27/08

DESIGNED	KV
DRAWN	DC
CHECKED	PDM
IN CHARGE	PAR
DATE	NOV. 2, 2005
SCALE	1/8"=1'-0" (8' 4' 0 8')

PORT AUTHORITY OF ALLEGHENY COUNTY
PITTSBURGH PENNSYLVANIA

NORTH SHORE CONNECTOR
NORTH SIDE STATION AND CUT & COVER TUNNEL WEST
PLAN @ TRACK LEVEL
STA. L6043+00 TO STA. L6045+00

PORT AUTHORITY

CONTRACT NO. NSC-006
DWG. NO. TN612-1 SHT. 57-1

$DATE$ $TIME$
$FILE$

DOOR OPENING TABLE		
#	R.O. WIDTH	LOCATION
D7	3'-4½"	R6045+43.72
D8	3'-4½"	R6045+44.43
NOTE: DOOR HGT. 7'-1½" TYP. U.O.N.		

NOTES:

1. FOR GENERAL NOTES, SEE DRAWINGS TN100 & TN101.
2. SEE ST DRAWINGS, FOR DETAILS OF S.R. 65 UNDERPINNING.
3. SEE PL DRAWINGS FOR LOCATION AND DETAILS OF DRAINAGE.

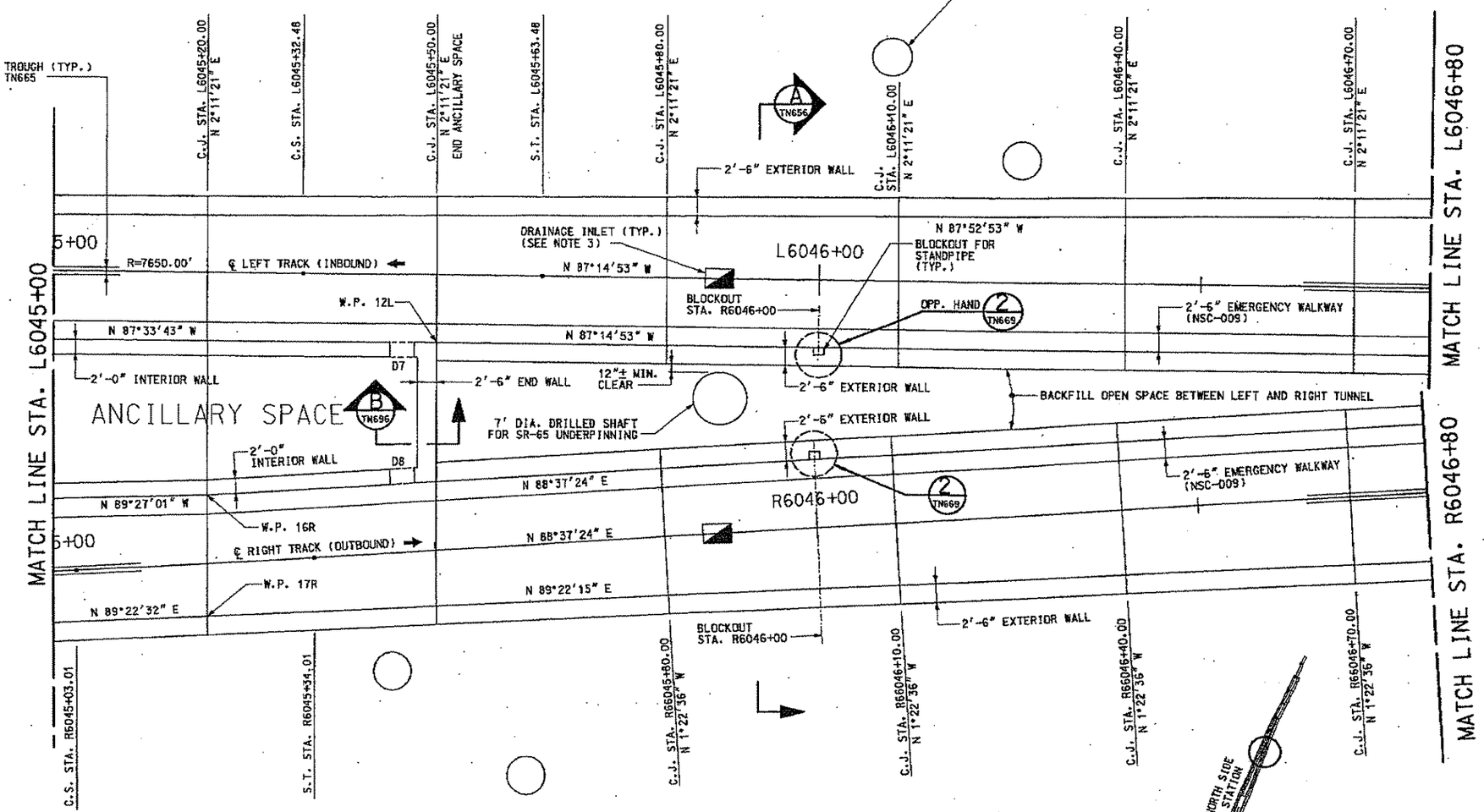

W.P.	STATION	OFFSET
11L	NOT USED	NOT USED
12L	L6045+50.09	9'-0" RIGHT
16R	R6045+20.61	8'-11⅞" LEFT
17R	R6045+19.65	6'-11⅞" RIGHT

PLAN @ TRACK LEVEL

STA. L6045+00 TO STA. L6046+80
STA. R6045+00 TO STA. R6046+80

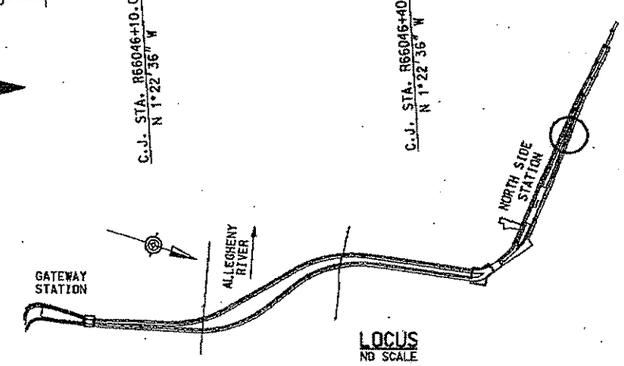

LOCUS
NO SCALE

NO.	DATE	DESCRIPTION

REVISIONS

THE PREPARATION OF THIS DOCUMENT HAS BEEN FINANCED IN PART THROUGH A GRANT FROM THE FEDERAL TRANSIT ADMINISTRATION, U.S. DEPARTMENT OF TRANSPORTATION, UNDER THE URBAN MASS TRANSPORTATION ACT OF 1964, AS AMENDED, FOR THE PORT AUTHORITY OF ALLEGHENY COUNTY, PENNSYLVANIA.

PETER DENNIS MAUROTZ — PENNSYLVANIA

SIGNATURE

DMJM HARRIS | AECOM
FOUR GATEWAY CENTER
20TH FLOOR
PITTSBURGH, PA. 15222

APPROVED — 11-2-05 DATE

DESIGNED	PDW
DRAWN	DC
CHECKED	CCB
IN CHARGE	PAR
DATE	NOV. 2, 2005
SCALE	1/8"=1'-0"

PORT AUTHORITY OF ALLEGHENY COUNTY
PITTSBURGH PENNSYLVANIA

NORTH SHORE CONNECTOR
NORTH SIDE STATION AND CUT & COVER TUNNEL WEST
PLAN @ TRACK LEVEL
STA. L6045+00 TO STA. L6046+80

PORT AUTHORITY

CONTRACT NO. NSC-005
DWG. NO. TN613 SHT. 58

10/26/2005 4:43:43 PM
m:\mgf\find\pw\ne ddr\06tn613.dgn

NOTES:

1. FOR GENERAL NOTES, SEE DRAWINGS TN100 & TN101.
2. SEE ST DRAWINGS FOR DETAILS OF S.R. 65 UNDERPINNING.
3. SEE PL DRAWINGS FOR LOCATION AND DETAILS OF DRAINAGE.

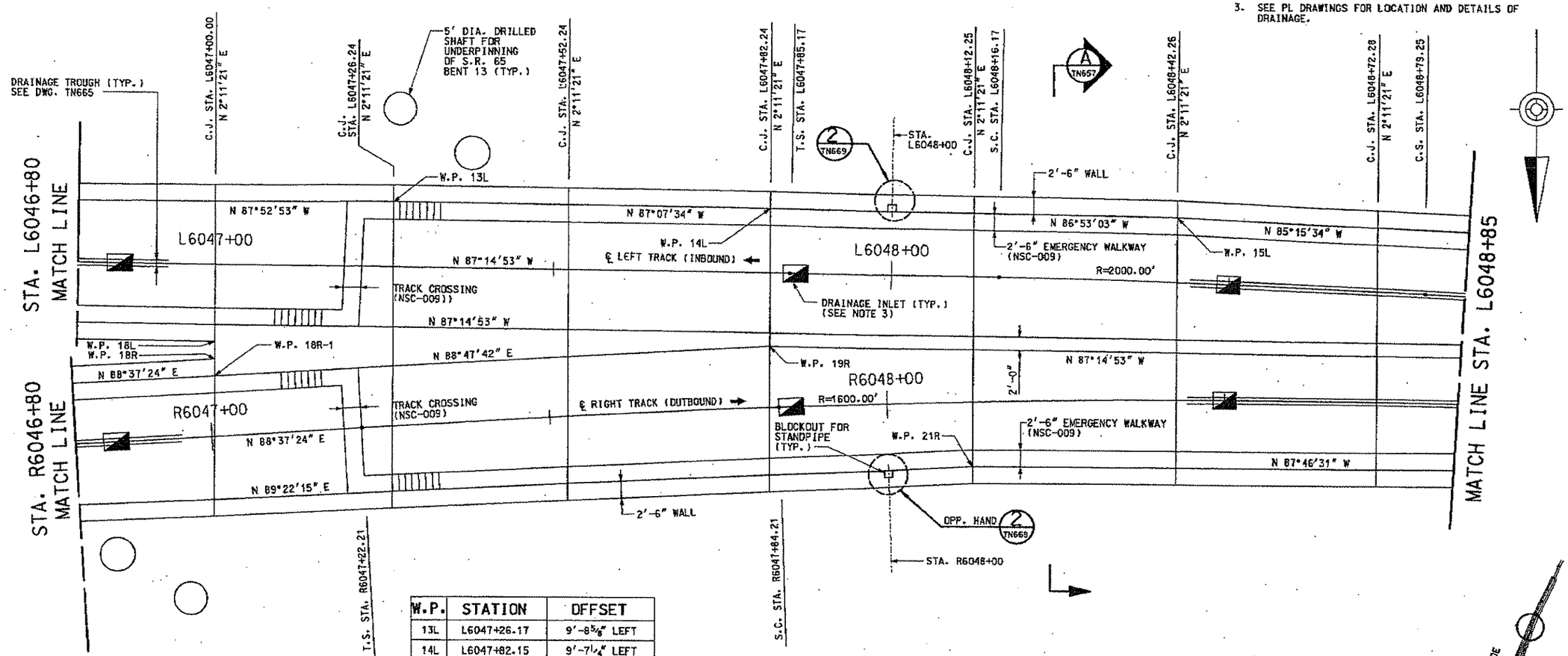

W.P.	STATION	OFFSET
13L	L6047+26.17	9'-8 5/8" LEFT
14L	L6047+82.15	9'-7 1/4" LEFT
15L	L6048+41.96	9'-8" LEFT
18L	L6047+00.12	11'-6" RIGHT
18R	R6047+01.13	11'-6" LEFT
18R-1	R6047+00.98	9'-0" LEFT
19R	R6047+83.21	9'-1 5/8" LEFT
21R	R6048+12.57	9'-7 1/4" RIGHT

PLAN @ TRACK LEVEL

STA. L6046+80 TO STA. L6048+85
STA. R6046+80 TO STA. R6048+85

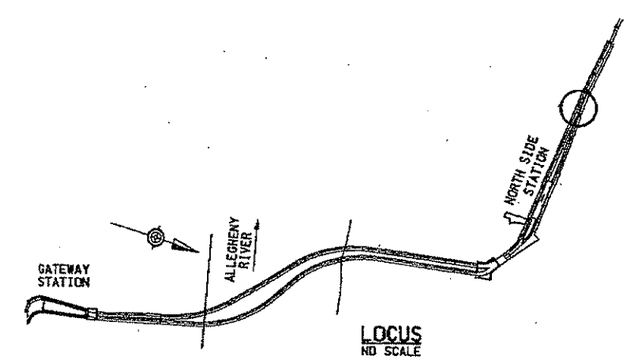

LOCUS
NO SCALE

NO.	DATE	DESCRIPTION

REVISIONS

THE PREPARATION OF THIS DOCUMENT HAS BEEN FINANCED IN PART THROUGH A GRANT FROM THE FEDERAL TRANSIT ADMINISTRATION, U.S. DEPARTMENT OF TRANSPORTATION, UNDER THE URBAN MASS TRANSPORTATION ACT OF 1964, AS AMENDED, FOR THE PORT AUTHORITY OF ALLEGHENY COUNTY, PENNSYLVANIA.

COMMONWEALTH OF PENNSYLVANIA REGISTERED PROFESSIONAL ENGINEER PETER DENNIS MAURITZ PE027 11153

SIGNATURE

DMJM HARRIS | AECOM
FOUR GATEWAY CENTER
20TH FLOOR
PITTSBURGH, PA. 15222

APPROVED — 11-2-05 DATE

DESIGNED	PDM
DRAWN	DC
CHECKED	CCB
IN CHARGE	PAR
DATE	NOV. 2, 2005
SCALE	1/8"=1'-0"

8' 4' 0 8'

PORT AUTHORITY OF ALLEGHENY COUNTY
PITTSBURGH PENNSYLVANIA

NORTH SHORE CONNECTOR
NORTH SIDE STATION AND CUT & COVER TUNNEL WEST
PLAN @ TRACK LEVEL
STA. L6046+80 TO STA. L6048+85

PORT AUTHORITY

CONTRACT NO. NSC-006
DWG. NO. TN614 SHT. 59

10/26/2005 4:43:43 PM
n:\nsf\final\gw\ne ele\06tn614dgn

NOTES:

1. FOR GENERAL NOTES, SEE DRAWINGS TN100 & TN101.
2. SEE PL DRAWINGS FOR LOCATION AND DETAILS OF DRAINAGE.

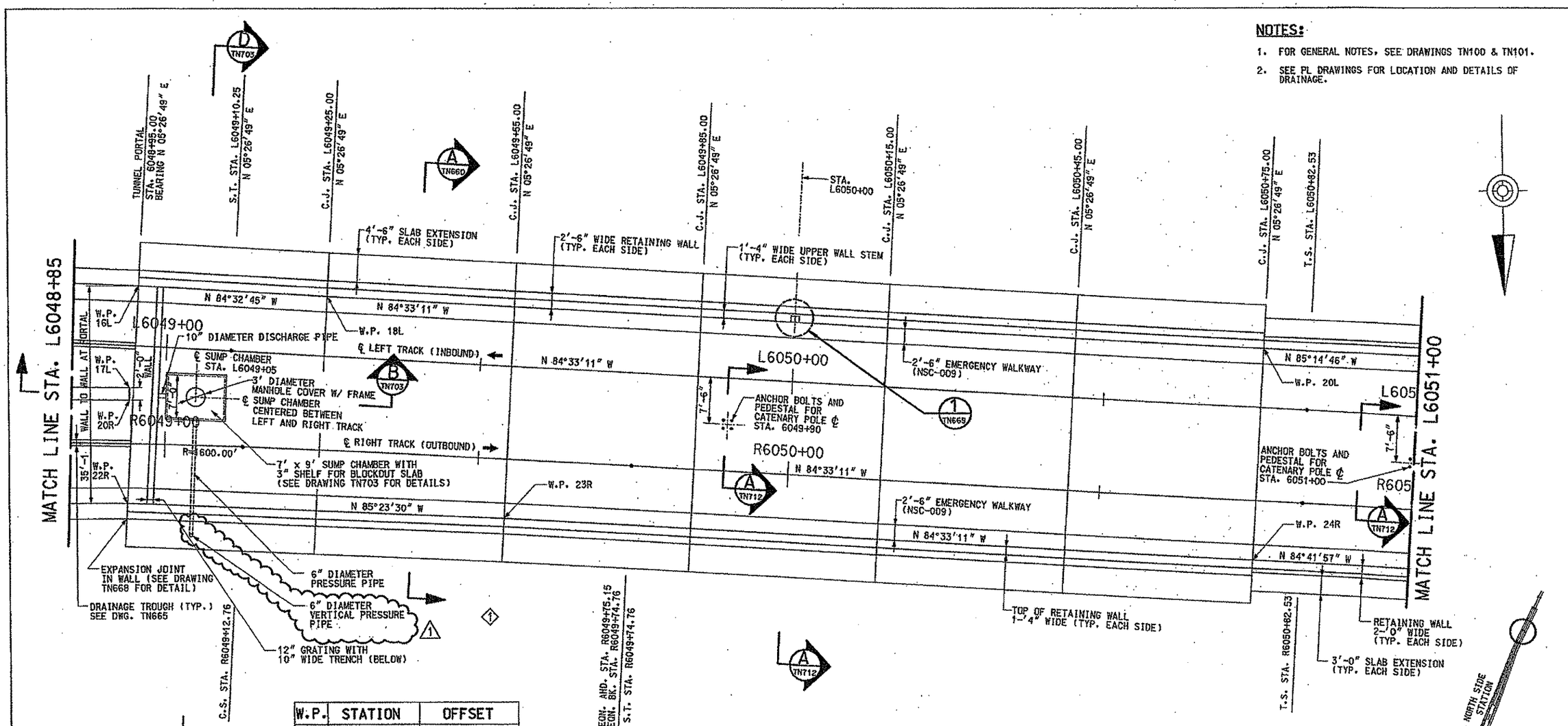

W.P.	STATION	OFFSET
16L	L6048+95.00	9'-7 3/8" LEFT
17L	L6048+94.37	6'-9 5/8" RIGHT
18L	L6049+25.00	9'-7 1/4" LEFT
20L	L6050+75.00	9'-7 1/4" LEFT
20R	R6048+94.29	7'-0 3/4" LEFT
22R	R6048+94.27	9'-7 3/8" RIGHT
23R	R6049+54.60	9'-7 1/4" RIGHT
24R	R6050+75.00	9'-7 3/8" RIGHT

PLAN @ TRACK LEVEL

STA. L6048+85 TO STA. L6051+00
STA. R6048+85 TO STA. R6051+00

LOCUS

NO SCALE

NO.	DATE	DESCRIPTION
1	07/03/07	REVISION 3 - RELOCATED PIPE
0	12/09/05	ADDENDUM 2 - DRAWING MODIFIED

REVISIONS

THE PREPARATION OF THIS DOCUMENT HAS BEEN FINANCED IN PART THROUGH A GRANT FROM THE FEDERAL TRANSIT ADMINISTRATION, U.S. DEPARTMENT OF TRANSPORTATION, UNDER THE URBAN MASS TRANSPORTATION ACT OF 1964, AS AMENDED, FOR THE PORT AUTHORITY OF ALLEGHENY COUNTY, PENNSYLVANIA.

COMMONWEALTH OF PENNSYLVANIA REGISTERED PROFESSIONAL ENGINEER PETER DENNIS MAURITZ PE071163

SIGNATURE

DMJM HARRIS | AECOM
FOUR GATEWAY CENTER
20TH FLOOR
PITTSBURGH, PA. 15222

APPROVED — DATE 7/2/07

DESIGNED PDM
DRAWN DC
CHECKED CCB
IN CHARGE PAR
DATE NOV. 2, 2005
SCALE 1/8"=1'-0"

PORT AUTHORITY OF ALLEGHENY COUNTY
PITTSBURGH PENNSYLVANIA

NORTH SHORE CONNECTOR
NORTH SIDE STATION AND CUT & COVER TUNNEL WEST
PLAN @ TRACK LEVEL
STA. L6048+85 TO STA. L6051+00

PORT AUTHORITY

CONTRACT NO. NSC-006
DWG. NO. TN615-1 SHT. 60-1

NOTES:

1. FOR GENERAL NOTES, SEE DRAWINGS TN100 & TN101.

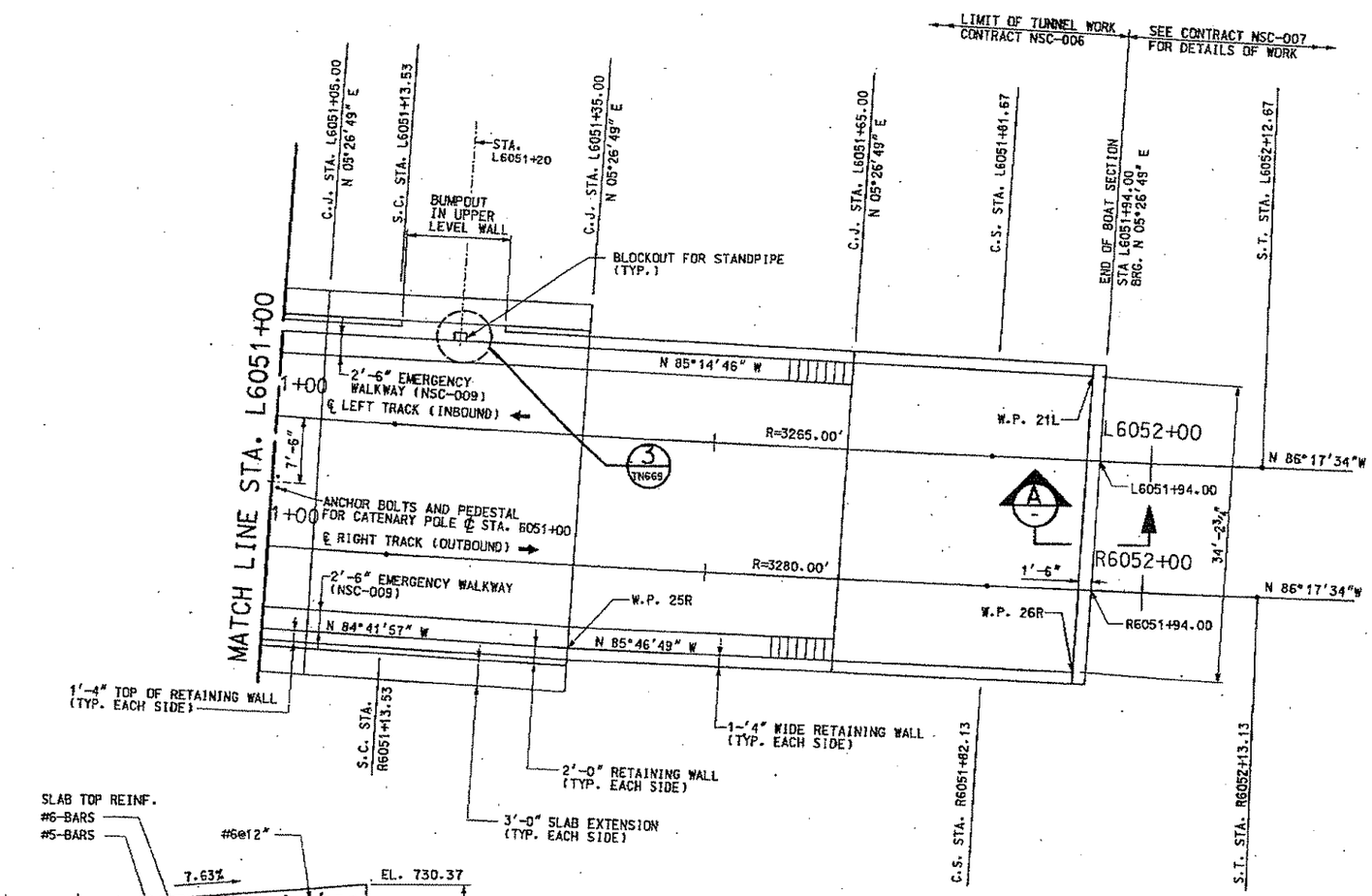

W.P.	STATION	OFFSET
21L	L6051+92.77	9'-7¾" LEFT
25R	R6051+34.89	9'-8⅛" RIGHT
26R	R6051+92.23	9'-7 " RIGHT

PLAN @ TRACK LEVEL

STA. L6051+00 TO STA. L6051+94.00
STA. R6051+00 TO STA. R6051+94.00

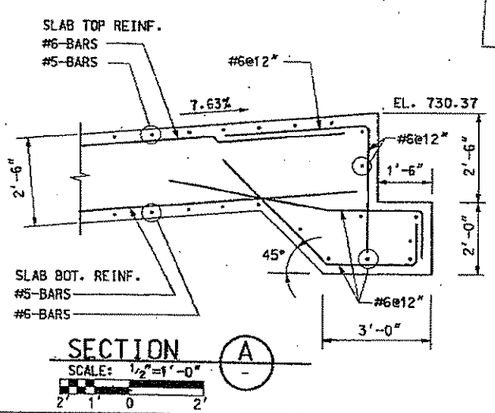

SECTION A

SCALE: ½"=1'-0"

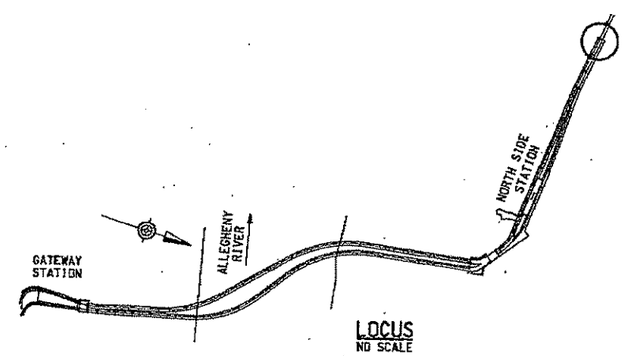

LOCUS
NO SCALE

NO.	DATE	DESCRIPTION

REVISIONS

THE PREPARATION OF THIS DOCUMENT HAS BEEN FINANCED IN PART THROUGH A GRANT FROM THE FEDERAL TRANSIT ADMINISTRATION, U.S. DEPARTMENT OF TRANSPORTATION, UNDER THE URBAN MASS TRANSPORTATION ACT OF 1964, AS AMENDED. FOR THE PORT AUTHORITY OF ALLEGHENY COUNTY, PENNSYLVANIA.

COMMONWEALTH OF PENNSYLVANIA
REGISTERED PROFESSIONAL
PETER DENNIS MAURITZ
PE071183
SIGNATURE

DMJM HARRIS | AECOM
FOUR GATEWAY CENTER
20TH FLOOR
PITTSBURGH, PA. 15222
APPROVED
11-2-05
DATE

DESIGNED	PDM
DRAWN	DC
CHECKED	CCB
IN CHARGE	PAR
DATE	NOV. 2, 2005
SCALE	1/8"=1'-0" U.O.N.

PORT AUTHORITY OF ALLEGHENY COUNTY
PITTSBURGH PENNSYLVANIA

NORTH SHORE CONNECTOR
NORTH SIDE STATION AND CUT & COVER TUNNEL WEST
PLAN @ TRACK LEVEL
STA. L6051+00 TO STA. L6051+94.00

PORT AUTHORITY

CONTRACT NO. NSC-006
DWG. NO. TN616
SHT. 61

10/26/2005 4:43:50 PM
m:\ner\rfi\nsf\gw\rs c&q\06tn616.dgn

NOTES:

1. FOR GENERAL NOTES, SEE DRAWINGS TN100 & TN101.
2. SEE DRAWING TN679 TO TN683, FOR DETAILS OF MEZZANINE LEVEL SLAB.
3. SEE DRAWINGS TN642 TO TN645, FOR ELEVATION OF SLURRY DIAPHRAGM WALLS.
4. SEE DRAWING TN610 FOR TABLE OF WORK POINTS (W.P., U.O.N.).
5. TAPER TOP OF CONCRETE SLAB ELEVATION TO MATCH TOP OF SLAB ELEVATION IN CONCOURSE.
6. SEE PL DRAWINGS FOR LOCATION OF FLOOR DRAINS. PITCH SLAB TO DRAIN BY LOWERING THE TOP OF SLAB AT THE DRAIN 1 INCH AND PROVIDE POSITIVE DRAINAGE AT THE RADIUS TOLERANCES ALLOW.

DOOR OPENING TABLE		
#	R.O. WIDTH	LOCATION
D11	5'-0"	STA. L6040+30.87 9'-0" RIGHT
D12	6'-5"	STA. R6040+27.44 9'-5¾" LEFT
D13	9'-9"	STA. L6040+33.23 9'-4¾" LEFT
NOTE: ROUGH OPENING HGT. 7'-2½" A.F.F. TYP. U.O.N. DOOR OPENING STA GIVEN TO CENTER OF ROUGH OPENING.		

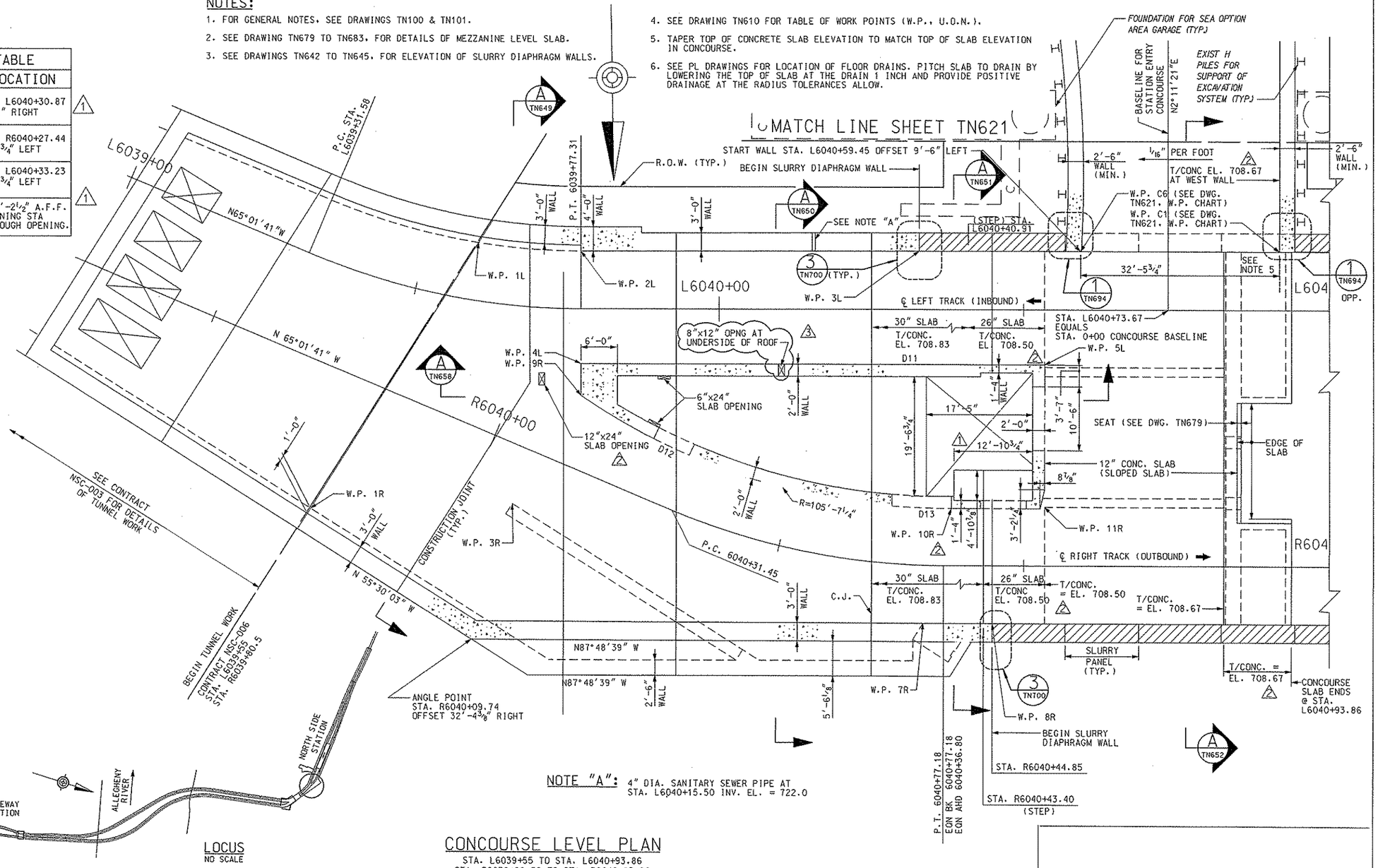

NOTE "A": 4" DIA. SANITARY SEWER PIPE AT STA. L6040+15.50 INV. EL. = 722.0

LOCUS
NO SCALE

CONCOURSE LEVEL PLAN

STA. L6039+55 TO STA. L6040+93.86
STA. R6039+80.58 TO STA. R6040+93.86

NO.	DATE	DESCRIPTION
3	6/20/08	REVISION 9 - ADDED OPENING
2	5/09/08	REVISION 8 - MODIFIED MEZZANINE SLAB ELEVATIONS
1	1/27/08	REVISION 6 - REVISED DOOR LOCATION

REVISIONS

THE PREPARATION OF THIS DOCUMENT HAS BEEN FINANCED IN PART THROUGH A GRANT FROM THE FEDERAL TRANSIT ADMINISTRATION, U.S. DEPARTMENT OF TRANSPORTATION, UNDER THE URBAN MASS TRANSPORTATION ACT OF 1964, AS AMENDED, FOR THE PORT AUTHORITY OF ALLEGHENY COUNTY, PENNSYLVANIA.

COMMONWEALTH OF PENNSYLVANIA REGISTERED PROFESSIONAL ENGINEER PETER DENNIS MAURITZ 047062

SIGNATURE

DMJM HARRIS | AECOM
FOUR GATEWAY CENTER
20TH FLOOR
PITTSBURGH, PA. 15222

APPROVED — DATE 6/25/08

DESIGNED	KV
DRAWN	DC
CHECKED	PDM
IN CHARGE	PAR
DATE	NOV. 2, 2005
SCALE	1/8"=1'-0"

8' 4' 0 8'

PORT AUTHORITY OF ALLEGHENY COUNTY
PITTSBURGH PENNSYLVANIA

NORTH SHORE CONNECTOR
NORTH SIDE STATION AND CUT & COVER TUNNEL WEST
CONCOURSE PLAN
STA. L6039+55.00 TO STA. L6040+93.86

PORT AUTHORITY

CONTRACT NO. NSC-006
DWG. NO. TN618-3 SHT. 62-3

$DATE$ $TIME$
$FILE$

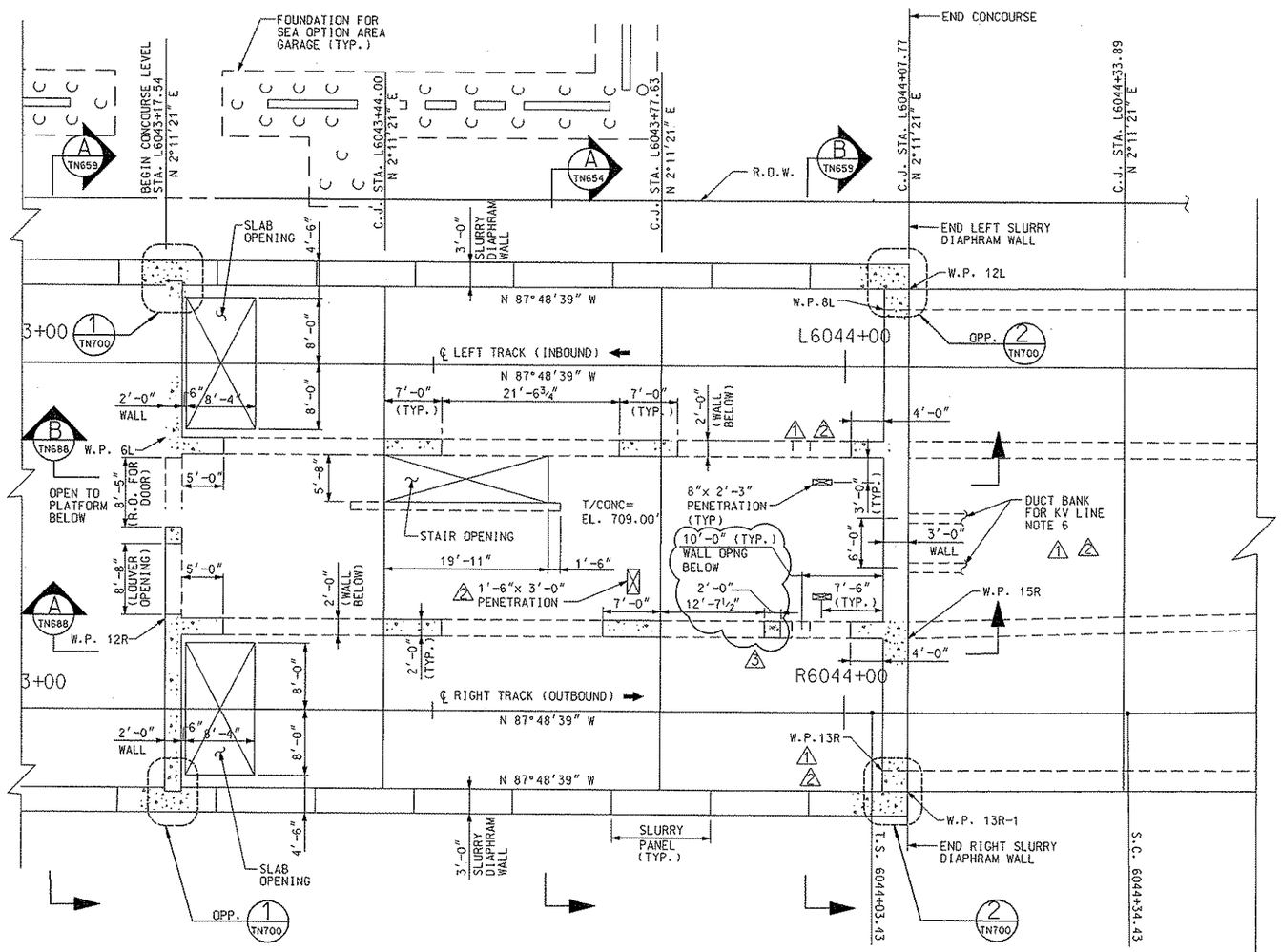

CONCOURSE LEVEL PLAN

STA. L6043+17.54 TO STA. L6044+07.77
STA. R6043+17.54 TO STA. R6044+07.77

NOTES:

1. FOR GENERAL NOTES, SEE DRAWINGS TN100 & TN101.
2. SEE DRAWINGS TN642 TO TN645, FOR ELEVATION OF SLURRY DIAPHRAGM WALLS.
3. FOR BEAM AND COLUMN SCHEDULE, SEE DRAWING TN688.
4. SEE DRAWING TN612, FOR TABLE OF W.P. LOCATIONS.
5. SEE PL DRAWINGS FOR LOCATION OF FLOOR DRAINS. PITCH SLAB AT THE DRAIN 1 INCH AND PROVIDE POSITIVE DRAINAGE AT THE RADIUS TOLERANCES ALLOW.
6. FOR CONDUIT PENETRATION THROUGH WALL USE DETAIL 1 TN697, SIMILAR.

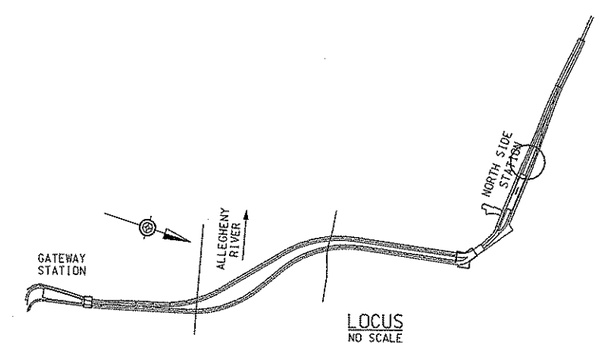

LOCUS
NO SCALE

NO.	DATE	DESCRIPTION
3	6/20/08	REVISION 9 – REVISED OPNG SIZE, MOVED COLUMN
2	5/09/08	REVISION 8 – REVISED FLOOR AND WALL PENETRATION
1	1/27/08	REVISION 6 – ADDED FLOOR AND WALL PENETRATION

REVISIONS

THE PREPARATION OF THIS DOCUMENT HAS BEEN FINANCED IN PART THROUGH A GRANT FROM THE FEDERAL TRANSIT ADMINISTRATION, U.S. DEPARTMENT OF TRANSPORTATION, UNDER THE URBAN MASS TRANSPORTATION ACT OF 1964, AS AMENDED. FOR THE PORT AUTHORITY OF ALLEGHENY COUNTY, PENNSYLVANIA.

COMMONWEALTH OF PENNSYLVANIA REGISTERED PROFESSIONAL PETER DENNIS MAURITZ ENGINEER 027703

SIGNATURE

DMJM HARRIS | AECOM
FOUR GATEWAY CENTER
20TH FLOOR
PITTSBURGH, PA. 15222

APPROVED

6/25/08
DATE

DESIGNED	KV
DRAWN	DC
CHECKED	PDM
IN CHARGE	PAR
DATE	NOV. 2, 2005
SCALE	1/8"=1'-0"

8' 4' 0 8'

PORT AUTHORITY OF ALLEGHENY COUNTY
PITTSBURGH PENNSYLVANIA

NORTH SHORE CONNECTOR
NORTH SIDE STATION AND CUT & COVER TUNNEL WEST
CONCOURSE LEVEL PLAN
STA. L6043+17.54 TO STA. L6044+07.77

PORT AUTHORITY

CONTRACT NO. NSC-006
DWG. NO. TN620-3 SHT. 63-3

$DATE$ $TIME$
$FILE$

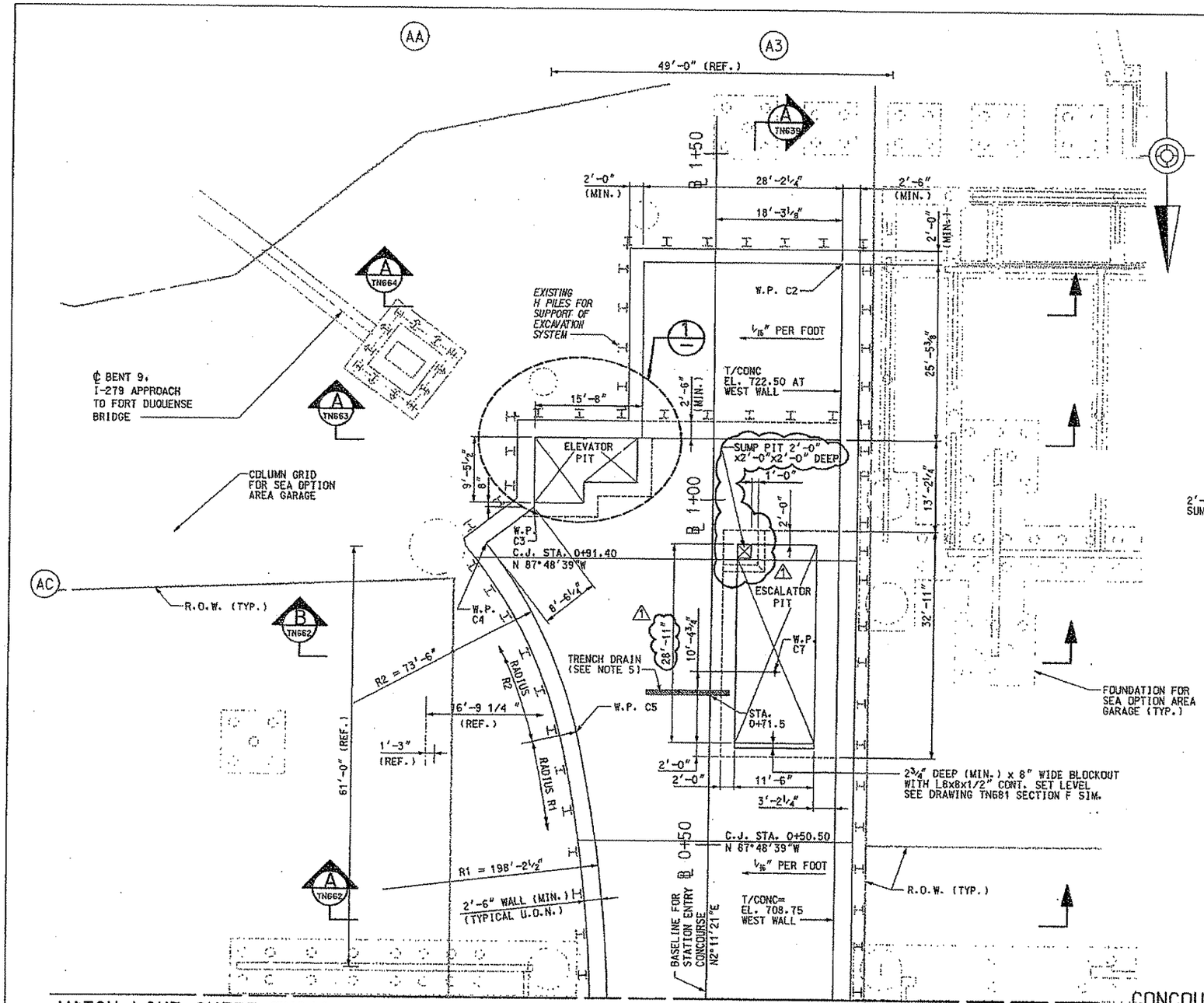

CONCOURSE LEVEL PLAN

SCALE: 1/8"=1'-0"

NOTES:

1. FOR GENERAL NOTES, SEE DRAWINGS TN100 & TN101.
2. FOR SUPPORT OF EXCAVATION, SEE DRAWING TN806.
3. SEE WP DRAWINGS, FOR DETAILS OF WATERPROOFING SYSTEM.
4. CONCRETE SHALL BE CAST AGAINST THE SUPPORT OF EXCAVATION (SOE) SYSTEM. PRIOR TO CASTING OF CONCRETE, A WATERPROOFING SYSTEM SHALL BE INSTALLED ON THE INSIDE FACE OF S.O.E., AS DETAILED ON THE WATERPROOFING (WP) DRAWINGS.
5. 11'-6" X 1' WIDE TRENCH DRAIN. COORDINATE WITH PL DRAWINGS.

WORK POINT TABLE

WORK POINT	BASELINE STATION	OFFSET		REMARKS
W.P. C1	0+09.50	18'-3⅛"	RIGHT	LOCATED ON DRAWING TN618
W.P. C2	1+34.30	18'-3⅛"	RIGHT	
W.P. C3	0+96.72	25'-7⅛"	LEFT	
W.P. C4	0+93.48	32'-3¾"	LEFT	
W.P. C5	0+65.08	18'-8¼"	LEFT	
W.P. C6	0+09.50	14'-2⅝"	LEFT	LOCATED ON DRAWING TN618
W.P. C7	0+75.13	9'-3⅞"	RIGHT	ESCALATOR WORK POINT

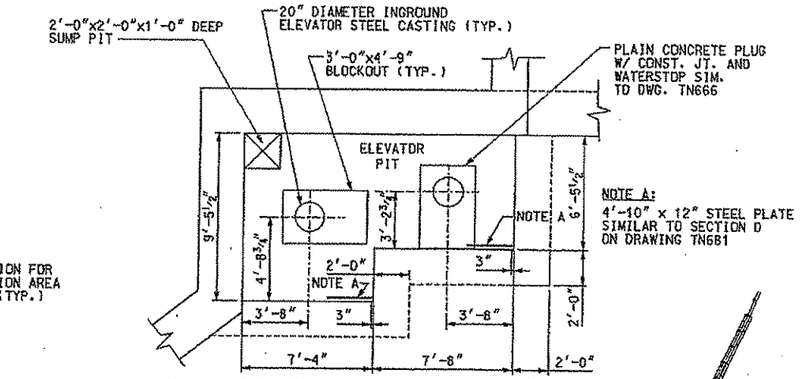

NOTE A:
4'-10" x 12" STEEL PLATE SIMILAR TO SECTION D ON DRAWING TN681

PLAN AT ELEVATOR PIT

SCALE: 1/4"=1'-0"

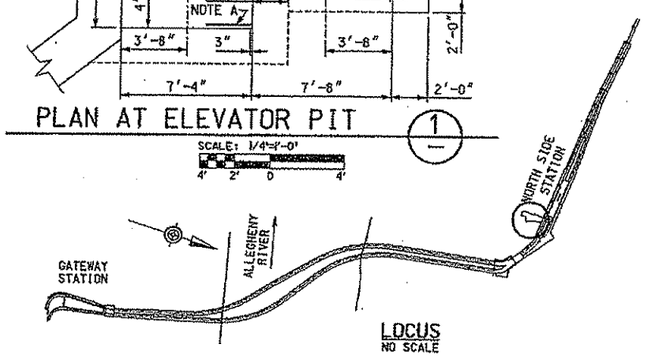

LOCUS
NO SCALE

NO.	DATE	DESCRIPTION
1	1/27/08	REVISION 6 - REVISED ESCALATOR AND SUMP PIT

REVISIONS

THE PREPARATION OF THIS DOCUMENT HAS BEEN FINANCED IN PART THROUGH A GRANT FROM THE FEDERAL TRANSIT ADMINISTRATION, U.S. DEPARTMENT OF TRANSPORTATION, UNDER THE URBAN MASS TRANSPORTATION ACT OF 1964, AS AMENDED. FOR THE PORT AUTHORITY OF ALLEGHENY COUNTY, PENNSYLVANIA.

PETER DENNIS MACNITZ — SIGNATURE

DMJM HARRIS | AECOM
FOUR GATEWAY CENTER
20TH FLOOR
PITTSBURGH, PA. 15222

APPROVED — DATE 1/31/08

DESIGNED	AAP
DRAWN	DC
CHECKED	WSC
IN CHARGE	PAR
DATE	NOV. 2, 2005
SCALE	AS SHOWN

PORT AUTHORITY OF ALLEGHENY COUNTY
PITTSBURGH PENNSYLVANIA

NORTH SHORE CONNECTOR
NORTH SIDE STATION AND CUT & COVER TUNNEL WEST
CONCOURSE PLAN
STATION ENTRY CONCOURSE

PORT AUTHORITY

CONTRACT NO. NSC-006
DWG. NO. TN621-1 SHT. 64-1

NOTES:

1. FOR GENERAL NOTES, SEE DRAWINGS TN100 & TN101.
2. SEE DRAWINGS TN642 TO TN645, FOR ELEVATION OF SLURRY DIAPHRAM WALLS.
3. FOR BEAM SCHEDULE, SEE DRAWING TN688.
4. PROTECT AND SECURE SURFACE OPENINGS WITH METAL PLATE OR PROTECTIVE SURFACE COVER UNTIL TURNOVER TO FOLLOW ON CONTRACT. PLATING AND PROTECTION SHALL BE DESIGNED FOR VEHICLE LOAD.
5. TOP OF CONCRETE ELEVATION 730.50 FOR SOUTH OPENING TOP OF CONCRETE ELEVATION 730.75 FOR NORTH OPENING.

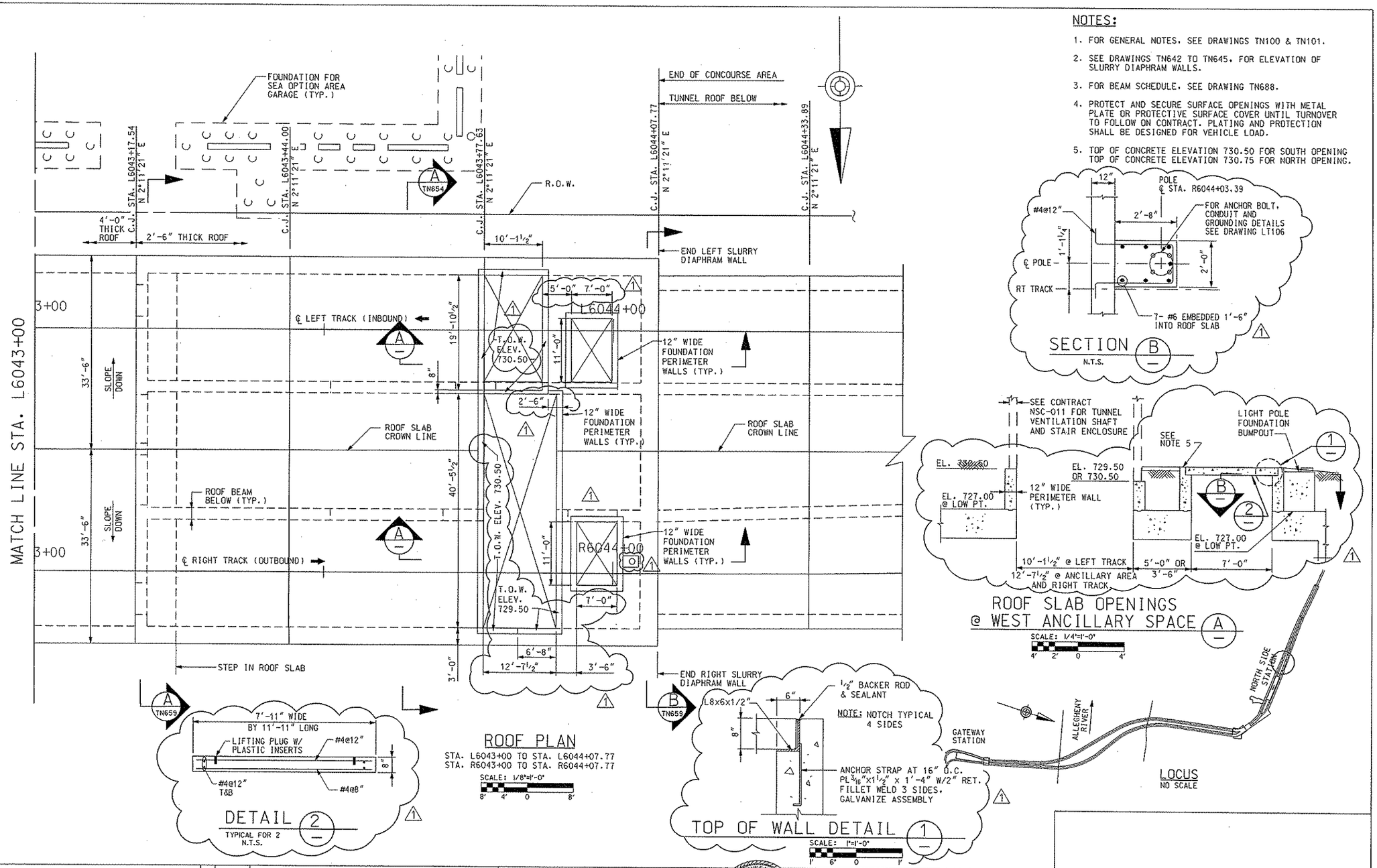

ROOF PLAN
STA. L6043+00 TO STA. L6044+07.77
STA. R6043+00 TO STA. R6044+07.77
SCALE: 1/8"=1'-0"

SECTION B

ROOF SLAB OPENINGS @ WEST ANCILLARY SPACE
SCALE: 1/4"=1'-0"

DETAIL 2
TYPICAL FOR 2
N.T.S.

TOP OF WALL DETAIL 1
SCALE: 1"=1'-0"

LOCUS
NO SCALE

NO.	DATE	DESCRIPTION
1	6/20/08	REVISION 9 - REVISED TRANSFORMER VENT OPNGS

REVISIONS

THE PREPARATION OF THIS DOCUMENT HAS BEEN FINANCED IN PART THROUGH A GRANT FROM THE FEDERAL TRANSIT ADMINISTRATION, U.S. DEPARTMENT OF TRANSPORTATION, UNDER THE URBAN MASS TRANSPORTATION ACT OF 1964, AS AMENDED. FOR THE PORT AUTHORITY OF ALLEGHENY COUNTY, PENNSYLVANIA.

COMMONWEALTH OF PENNSYLVANIA REGISTERED PROFESSIONAL ENGINEER PETER DENNIS MAURITZ

SIGNATURE

DMJM HARRIS | AECOM
FOUR GATEWAY CENTER
20TH FLOOR
PITTSBURGH, PA. 15222

APPROVED — DATE 6/25/08

DESIGNED	KV
DRAWN	DC
CHECKED	PDM
IN CHARGE	PAR
DATE	NOV. 2, 2005
SCALE	AS SHOWN

PORT AUTHORITY OF ALLEGHENY COUNTY
PITTSBURGH PENNSYLVANIA

NORTH SHORE CONNECTOR
NORTH SIDE STATION AND CUT & COVER TUNNEL WEST
ROOF PLAN
STA. L6043+00 TO STA. L6044+07.77

PORT AUTHORITY

CONTRACT NO. NSC-006
DWG. NO. TN624-1 SHT. 67-1

$DATE$ $TIME$
$FILE$

NOTES:

1. FOR GENERAL NOTES, SEE DRAWINGS TN100 & TN101.
2. ELEVATION IS CUT FROM THE ℄ OF THE RIGHT TRACK BASELINE, LOOKING UP STATION AND LOOKING TO THE LEFT.
3. SEE DRAWING TN653 FOR BASE SLAB ANCHOR (PERMANENT GROUND ANCHORS) LOCATION AND DETAILS.

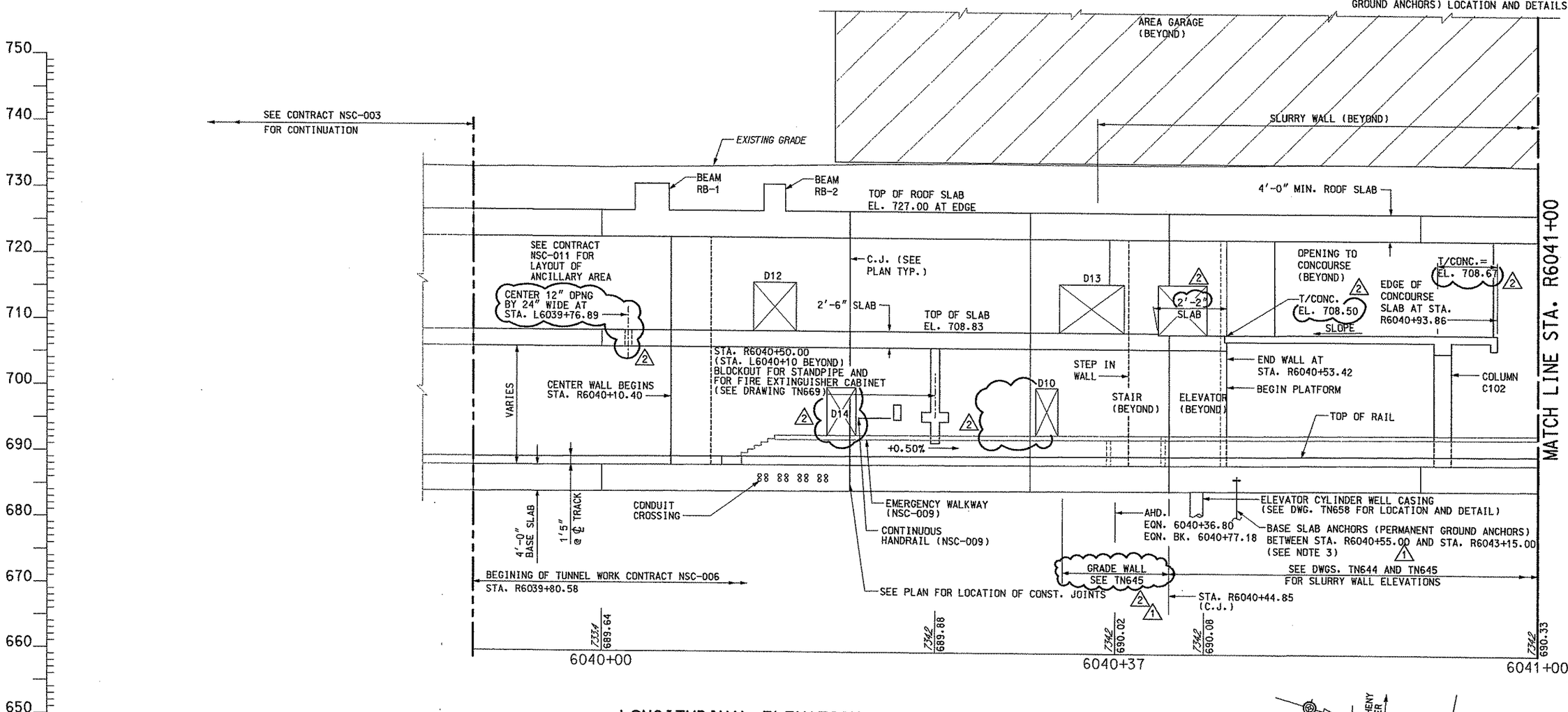

LONGITUDINAL ELEVATION

STA. R6039+80.58 TO STA. R6041+00

LOCUS

NO SCALE

NO.	DATE	DESCRIPTION
2	5/09/08	REVISION 8 – SEA GARAGE REVISIONS & MEZZ ELEVATIONS
1	1/27/08	REVISION 6 – SEA GARAGE REVISIONS

REVISIONS

THE PREPARATION OF THIS DOCUMENT HAS BEEN FINANCED IN PART THROUGH A GRANT FROM THE FEDERAL TRANSIT ADMINISTRATION, U.S. DEPARTMENT OF TRANSPORTATION, UNDER THE URBAN MASS TRANSPORTATION ACT OF 1964, AS AMENDED, FOR THE PORT AUTHORITY OF ALLEGHENY COUNTY, PENNSYLVANIA.

COMMONWEALTH OF PENNSYLVANIA REGISTERED PROFESSIONAL ENGINEER PETER DENNIS MAURITZ

SIGNATURE

DMJM HARRIS | AECOM
FOUR GATEWAY CENTER
20TH FLOOR
PITTSBURGH, PA. 15222

APPROVED — DATE 5/27/08

DESIGNED	KV
DRAWN	DJR
CHECKED	PDM
IN CHARGE	PAR
DATE	NOV. 2, 2005
SCALE	1/8"=1'-0" (8' 4' 0 8')

PORT AUTHORITY OF ALLEGHENY COUNTY
PITTSBURGH PENNSYLVANIA

NORTH SHORE CONNECTOR
NORTH SIDE STATION AND CUT & COVER TUNNEL WEST
LONGITUDINAL ELEVATION
STA. R6039+80.58 TO STA. R6041+00

PORT AUTHORITY

CONTRACT NO. NSC-006
DWG. NO. TN630-2 SHT. 69-2

$DATE$ $TIME$
$FILE$

NOTES:

1. FOR GENERAL NOTES, SEE DRAWINGS TN100 & TN101.
2. ELEVATION IS CUT FROM THE ℄ OF THE RIGHT TRACK BASELINE, LOOKING UP STATION AND LOOKING TO THE LEFT.
3. SEE DRAWING TN653 FOR BASE SLAB ANCHOR (PERMANENT GROUND ANCHORS) LOCATION AND DETAIL.

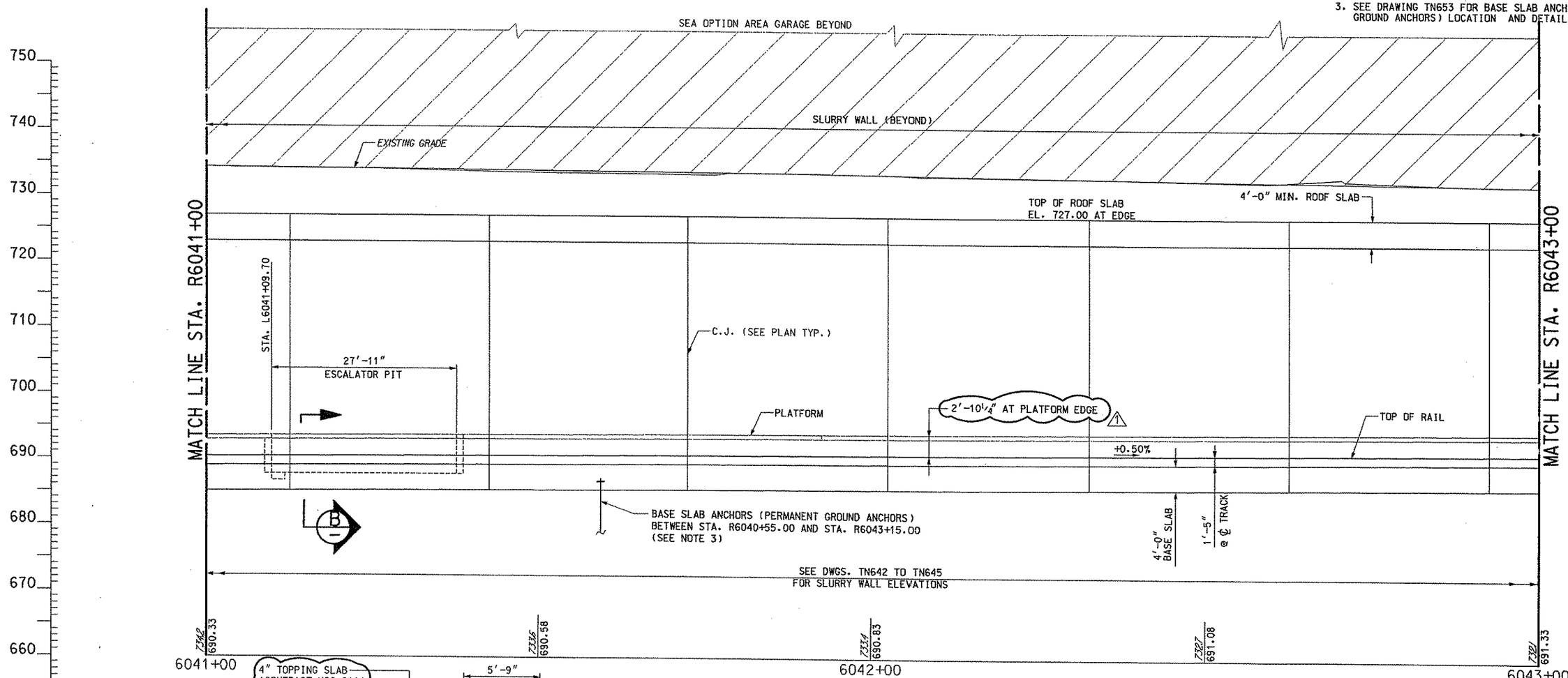

LONGITUDINAL ELEVATION

STA. R6041+00 TO STA. R6043+00

SCALE: 1/8"=1'-0"

8' 4' 0 8'

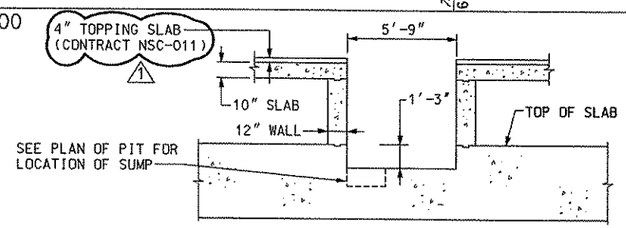

SECTION THROUGH ESCALATOR PIT (B) TN611

SCALE: 1/4"=1'-0"

4' 2' 0 4'

LOCUS

NO SCALE

NO.	DATE	DESCRIPTION
1	5/09/08	REVISION 8 - REVISED TOPPING SLAB THICKNESS

REVISIONS

THE PREPARATION OF THIS DOCUMENT HAS BEEN FINANCED IN PART THROUGH A GRANT FROM THE FEDERAL TRANSIT ADMINISTRATION, U.S. DEPARTMENT OF TRANSPORTATION, UNDER THE URBAN MASS TRANSPORTATION ACT OF 1964, AS AMENDED, FOR THE PORT AUTHORITY OF ALLEGHENY COUNTY, PENNSYLVANIA.

COMMONWEALTH OF PENNSYLVANIA REGISTERED PROFESSIONAL ENGINEER PETER DENNIS MAURITZ

SIGNATURE

DMJM HARRIS | AECOM

FOUR GATEWAY CENTER
20TH FLOOR
PITTSBURGH, PA. 15222

APPROVED

5/27/08
DATE

DESIGNED	KV
DRAWN	DJR
CHECKED	PDM
IN CHARGE	PAR
DATE	NOV. 2, 2005
SCALE	AS SHOWN

PORT AUTHORITY OF ALLEGHENY COUNTY
PITTSBURGH PENNSYLVANIA

NORTH SHORE CONNECTOR
NORTH SIDE STATION AND CUT & COVER TUNNEL WEST
LONGITUDINAL ELEVATION
STA. R6041+00 TO STA. R6043+00

PORT AUTHORITY

CONTRACT NO. NSC-006

DWG. NO. TN631-1 SHT. 70-1

$DATE$ $TIME$
$FILE$

NOTES:

1. FOR GENERAL NOTES, SEE DRAWINGS TN100 & TN101.
2. ELEVATION IS CUT FROM THE ℄ OF THE RIGHT TRACK BASELINE, LOOKING UP STATION AND LOOKING TO THE LEFT.
3. SEE DRAWING TN653 FOR BASE SLAB ANCHOR (PERMANENT GROUND ANCHORS) LOCATION AND DETAILS.
4. SEE DRAWING TN612 FOR DOOR OPENING TABLE.

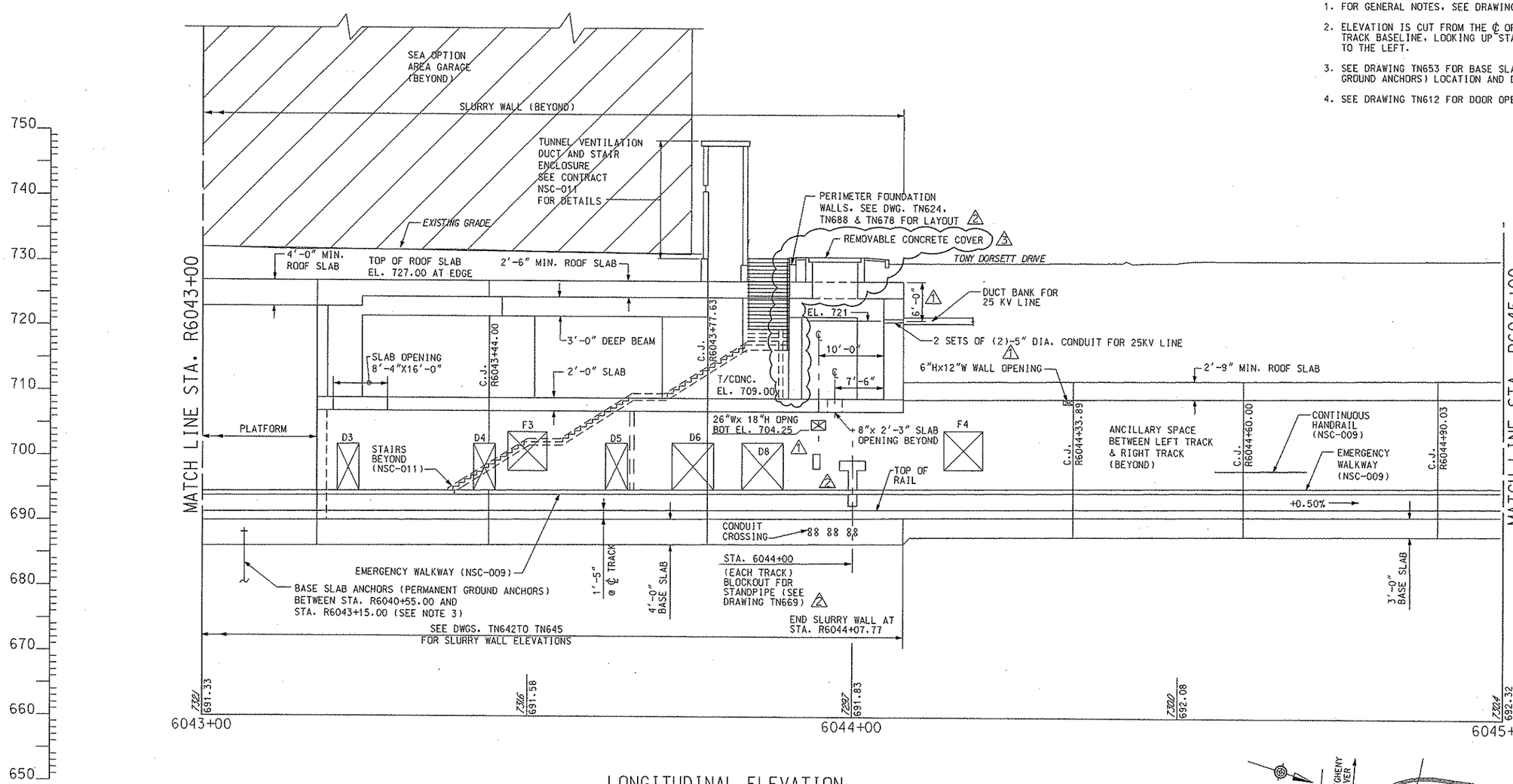

LONGITUDINAL ELEVATION

STA. R6043+00 TO STA. R6045+00

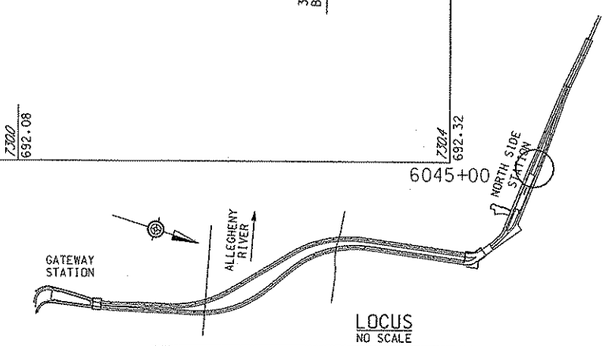

LOCUS
NO SCALE

NO.	DATE	DESCRIPTION
3	6/20/08	REVISION 9 - REVISED TRANS OPNG AND ADDED BILCO
2	5/09/08	REVISION 8 - PENETRATION LOCATION REVISED DSP NICHE MOD.
1	1/27/08	REVISION 6 - PENETRATION ADDED CONDUIT SIZE REVISED

REVISIONS

THE PREPARATION OF THIS DOCUMENT HAS BEEN FINANCED IN PART THROUGH A GRANT FROM THE FEDERAL TRANSIT ADMINISTRATION, U.S. DEPARTMENT OF TRANSPORTATION, UNDER THE URBAN MASS TRANSPORTATION ACT OF 1964, AS AMENDED. FOR THE PORT AUTHORITY OF ALLEGHENY COUNTY, PENNSYLVANIA.

COMMONWEALTH OF PENNSYLVANIA REGISTERED PROFESSIONAL ENGINEER PETER DENNIS MAURITZ 027031

SIGNATURE

DMJM HARRIS | AECOM
FOUR GATEWAY CENTER
20TH FLOOR
PITTSBURGH, PA. 15222

APPROVED — DATE 6/25/08

DESIGNED	KV
DRAWN	DJR
CHECKED	PDM
IN CHARGE	PAR
DATE	NOV. 2, 2005
SCALE	1/8"=1'-0" (8' 4' 0 8')

PORT AUTHORITY OF ALLEGHENY COUNTY
PITTSBURGH PENNSYLVANIA

NORTH SHORE CONNECTOR
NORTH SIDE STATION AND CUT & COVER TUNNEL WEST
LONGITUDINAL ELEVATION
STA. R6043+00 TO STA. R6045+00

PORT AUTHORITY

CONTRACT NO. NSC-006
DWG. NO. TN632-3 SHT. 71-3

$DATE$ $TIME$
$FILE$

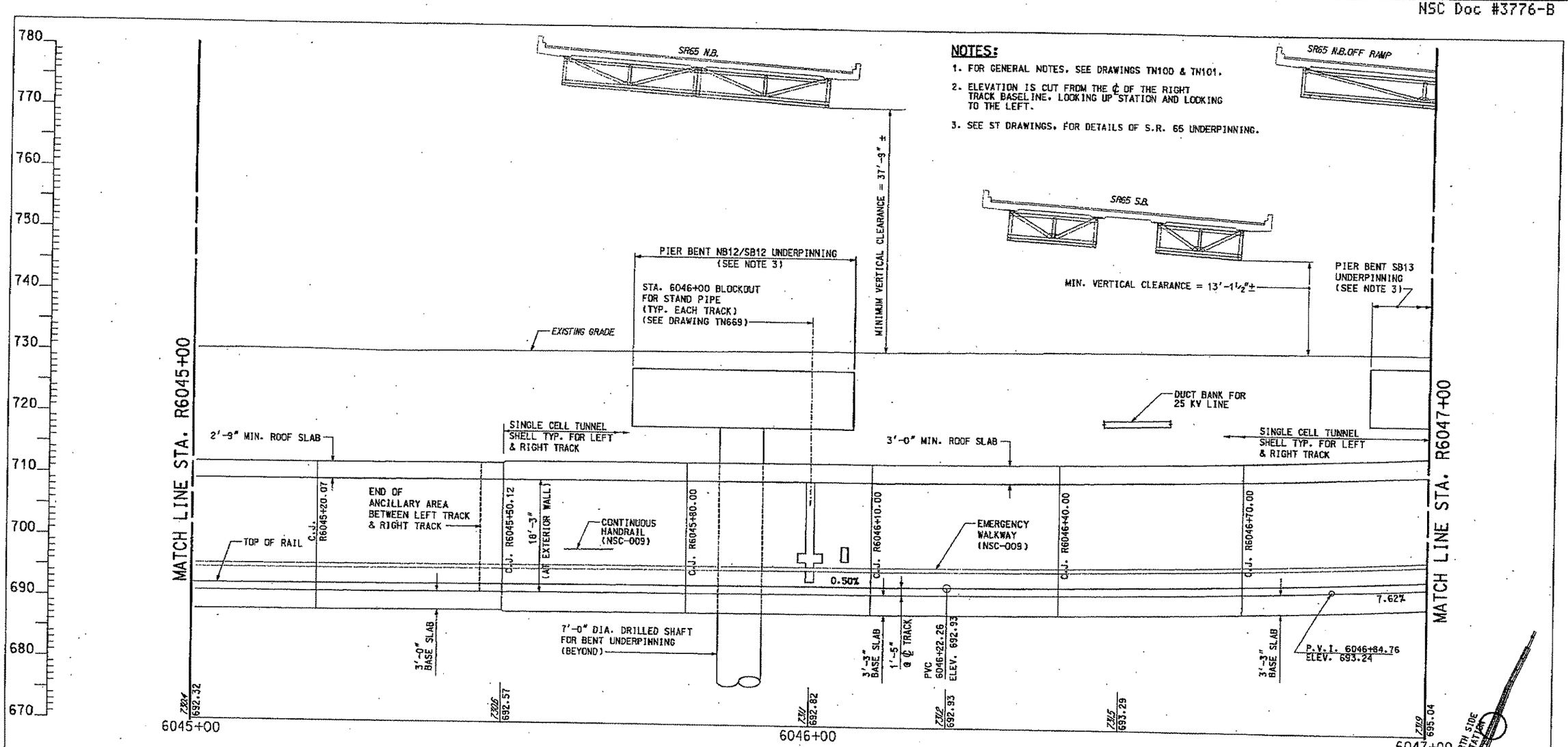

NOTES:

1. FOR GENERAL NOTES, SEE DRAWINGS TN100 & TN101.
2. ELEVATION IS CUT FROM THE ℄ OF THE RIGHT TRACK BASELINE, LOOKING UP STATION AND LOOKING TO THE LEFT.
3. SEE ST DRAWINGS, FOR DETAILS OF S.R. 65 UNDERPINNING.

LONGITUDINAL ELEVATION

STA. R6045+00 TO STA. R6047+00

NO.	DATE	DESCRIPTION

REVISIONS

THE PREPARATION OF THIS DOCUMENT HAS BEEN FINANCED IN PART THROUGH A GRANT FROM THE FEDERAL TRANSIT ADMINISTRATION, U.S. DEPARTMENT OF TRANSPORTATION, UNDER THE URBAN MASS TRANSPORTATION ACT OF 1964, AS AMENDED. FOR THE PORT AUTHORITY OF ALLEGHENY COUNTY, PENNSYLVANIA.

COMMONWEALTH OF PENNSYLVANIA REGISTERED PROFESSIONAL ENGINEER PETER DENNIS MAURITZ PE071183

SIGNATURE

DMJM HARRIS | AECOM

FOUR GATEWAY CENTER
20TH FLOOR
PITTSBURGH, PA. 15222

APPROVED — 11-2-05 DATE

DESIGNED	PDM
DRAWN	DJR
CHECKED	CBB
IN CHARGE	PAR
DATE	NOV. 2, 2005
SCALE	1/8"=1'-0"

8' 4' 0 8'

PORT AUTHORITY OF ALLEGHENY COUNTY
PITTSBURGH PENNSYLVANIA

NORTH SHORE CONNECTOR
NORTH SIDE STATION AND CUT & COVER TUNNEL WEST
LONGITUDINAL ELEVATION
STA. R6045+00 TO STA. R6047+00

PORT AUTHORITY

CONTRACT NO. NSC-006

DWG. NO. TN633 SHT. 72

10/26/2005 4:44:07 PM
n:\nef\fhol\gwins ckt\profiles\06tn633_r.dgn

NOTES:

1. FOR GENERAL NOTES, SEE DRAWINGS TN100 & TN101.
2. ELEVATION IS CUT FROM THE ℄ OF THE RIGHT TRACK BASELINE, LOOKING UP STATION AND LOOKING TO THE LEFT.
3. SEE ST DRAWINGS, FOR DETAILS OF S.R. 65 UNDERPINNING.
4. 3" EMBEDDED CONDUIT AT 9" O.C. THROUGH THE CENTER WALL, LOCATED AS INDICATED. SEE DRAWINGS TN697 FOR CONDUITS THROUGH THE SOUTH EXTERIOR WALL.
5. IF ANY CONCRETE WORK BETWEEN STA. L6047+00 AND STA. L6051+94 PROCEEDS FROM WEST TO EAST, CONTRACTOR SHALL TAKE MEASURE TO PREVENT MOVEMENT OF THE BASE SLAB OVER THE WATER PROOFING MEMBRANE UNTIL BASE SLAB TIES INTO SLAB EAST OF STA. L6047+00.

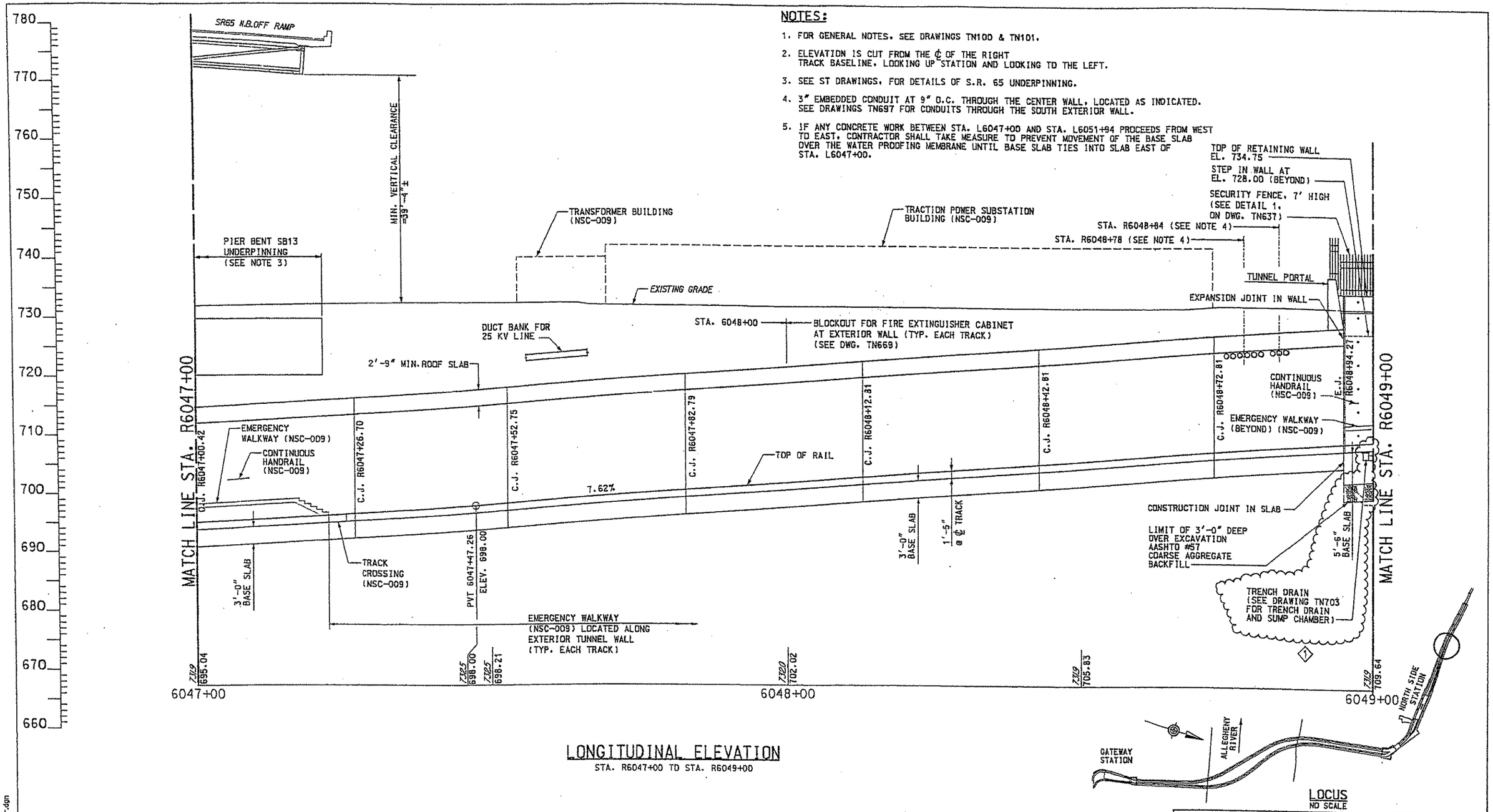

LONGITUDINAL ELEVATION

STA. R6047+00 TO STA. R6049+00

NO.	DATE	DESCRIPTION
1	12/09/05	ADDENDUM 2 - DRAWING MODIFIED

REVISIONS

THE PREPARATION OF THIS DOCUMENT HAS BEEN FINANCED IN PART THROUGH A GRANT FROM THE FEDERAL TRANSIT ADMINISTRATION, U.S. DEPARTMENT OF TRANSPORTATION, UNDER THE URBAN MASS TRANSPORTATION ACT OF 1964, AS AMENDED, FOR THE PORT AUTHORITY OF ALLEGHENY COUNTY, PENNSYLVANIA.

COMMONWEALTH OF PENNSYLVANIA REGISTERED PROFESSIONAL ENGINEER PETER DENNIS MAURITZ PE071183

SIGNATURE

DMJM HARRIS | AECOM

FOUR GATEWAY CENTER
20TH FLOOR
PITTSBURGH, PA. 15222

APPROVED — 11-2-05 DATE

DESIGNED	PDM
DRAWN	DJR
CHECKED	CBB
IN CHARGE	PAR
DATE	NOV. 2, 2005
SCALE	1/8"=1'-0" (8' 4' 0 8')

PORT AUTHORITY OF ALLEGHENY COUNTY
PITTSBURGH PENNSYLVANIA

NORTH SHORE CONNECTOR
NORTH SIDE STATION AND CUT & COVER TUNNEL WEST
LONGITUDINAL ELEVATION
STA. R6047+00 TO STA. R6049+00

PORT AUTHORITY

CONTRACT NO. NSC-006
DWG. NO. TN634 SHT. 73

12/7/2005 5:23p.
n:\msf\fhd\gr\ns ck\profiles\061n634_r.dgn

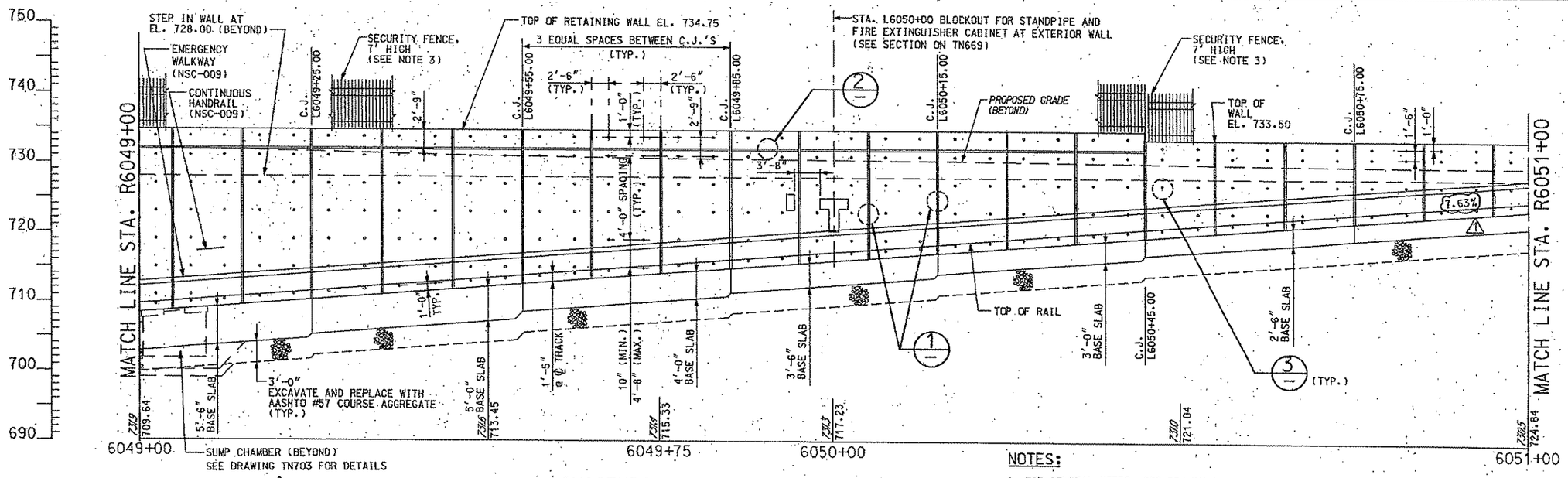

LONGITUDINAL ELEVATION

STA. R6049+00 TO STA. R6051+00

SCALE: 1/8"=1'-0"

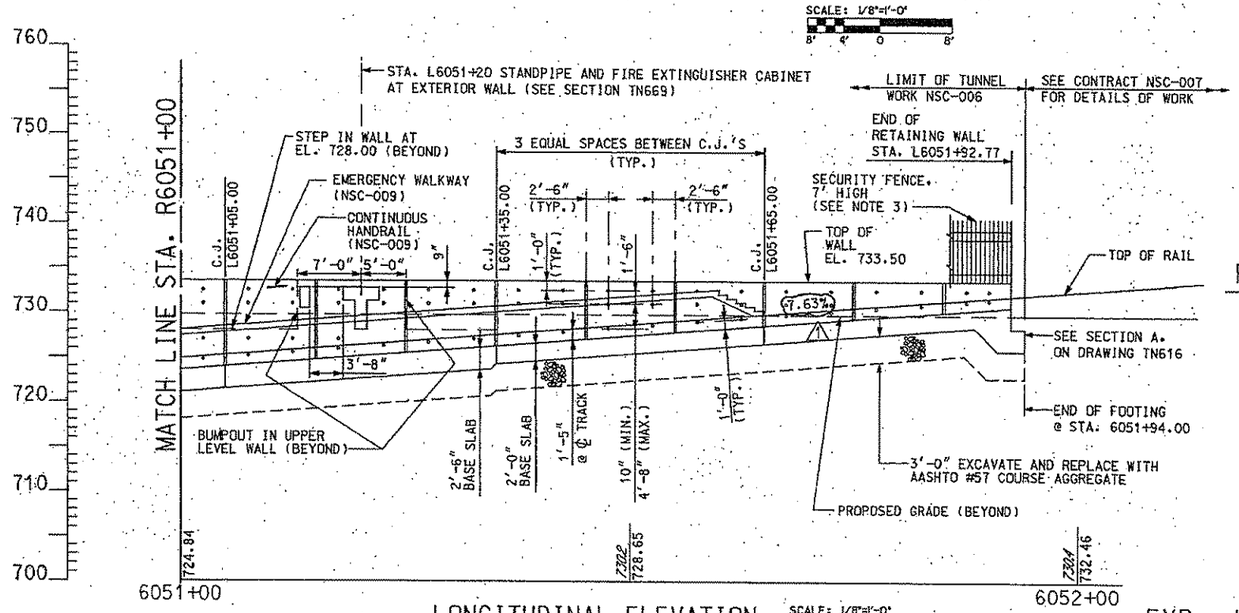

LONGITUDINAL ELEVATION

STA. R6051+00 TO STA. R6051+94.00

SCALE: 1/8"=1'-0"

NOTES:

1. FOR GENERAL NOTES, SEE DRAWINGS TN100 & TN101.
2. ELEVATION IS CUT FROM THE ℄ OF THE RIGHT TRACK BASELINE, LOOKING UP STATION AND LOOKING TO THE LEFT.
3. FOR SECURITY FENCE DETAIL, SEE DETAIL 1 ON DRAWING TN637.

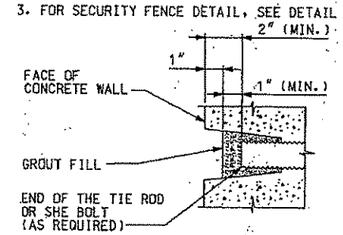

FORM TIE HOLE DETAIL 3 TN636

NTS

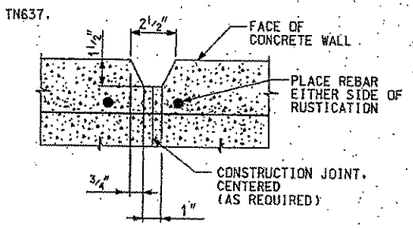

RUSTICATION STRIP DET. 1 TN636

NTS

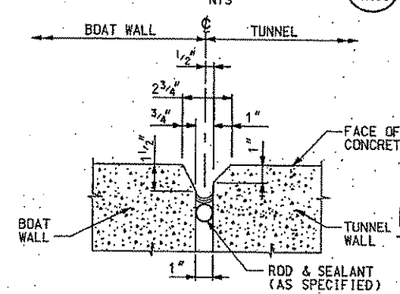

EXP. JT. DETAIL AT PORTAL 4 TN636 TN668

NTS

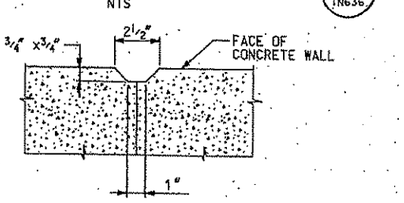

HOR. RUSTICATION STRIP DET. 2 TN636

NTS

NO.	DATE	DESCRIPTION
1	4/16/08	REVISION 7 – DRAWING MODIFIED
2	12/09/05	ADDENDUM 2 – DRAWING MODIFIED

REVISIONS

THE PREPARATION OF THIS DOCUMENT HAS BEEN FINANCED IN PART THROUGH A GRANT FROM THE FEDERAL TRANSIT ADMINISTRATION, U.S. DEPARTMENT OF TRANSPORTATION, UNDER THE URBAN MASS TRANSPORTATION ACT OF 1964, AS AMENDED. FOR THE PORT AUTHORITY OF ALLEGHENY COUNTY, PENNSYLVANIA.

COMMONWEALTH OF PENNSYLVANIA REGISTERED PROFESSIONAL PETER DENNIS MAURITZ ENGINEER

SIGNATURE

DMJM HARRIS | AECOM
FOUR GATEWAY CENTER
20TH FLOOR
PITTSBURGH, PA. 15222

APPROVED 4/17/08 DATE

DESIGNED	PDM/WBT
DRAWN	DJR
CHECKED	CBB
IN CHARGE	PAR
DATE	NOV. 2, 2005
SCALE	AS SHOWN

PORT AUTHORITY OF ALLEGHENY COUNTY
PITTSBURGH PENNSYLVANIA

NORTH SHORE CONNECTOR
NORTH SIDE STATION AND CUT & COVER TUNNEL WEST
LONGITUDINAL ELEVATION
STA. R6049+00 TO STA. R6051+94.00

PORT AUTHORITY

CONTRACT NO. NSC-006

DWG. NO. TN635-1 SHT. 74-1

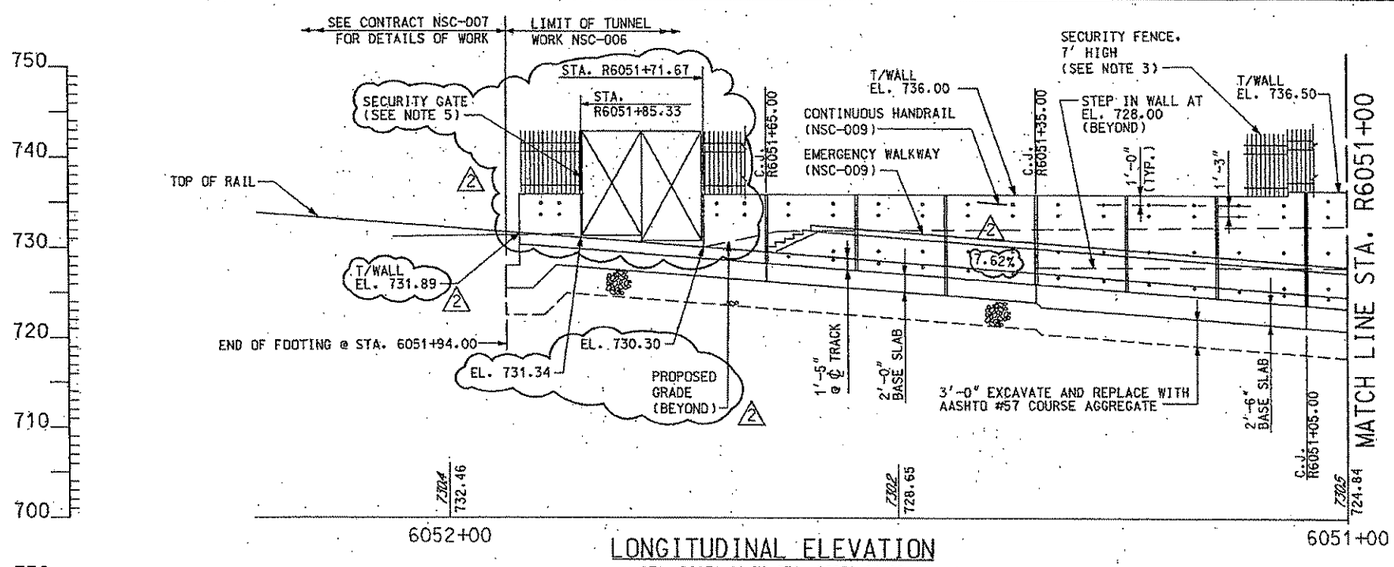

LONGITUDINAL ELEVATION

STA. R6051+00 TO STA. R6051+94.00

NOTES:

1. FOR GENERAL NOTES, SEE DRAWINGS TN100 & TN101.
2. ELEVATION IS CUT FROM THE ℄ OF THE RIGHT TRACK BASELINE, LOOKING UP STATION AND LOOKING TO THE RIGHT.
3. FOR SECURITY FENCE DETAIL, SEE DETAIL 1 ON DRAWING TN637. 2
4. PROVIDE BLOCKOUT 18" H x 12" W x 12" D FOR CONTROL PANEL AT SUMP CHAMBER. PROVIDE (2) - 4" DIAMETER PVC CONDUITS (ITEM 16111.011) FROM SUMP CHAMBER TO CONTROL PANEL BLOCKOUT COORDINATE PLACEMENT OF CONDUIT AND CONTROL PANEL WITH NSC-009 CONTRACT PRIOR TO CASTING CONCRETE. 2
5. FOR SECURITY GATE, SEE SECTION A ON TN637A. 2

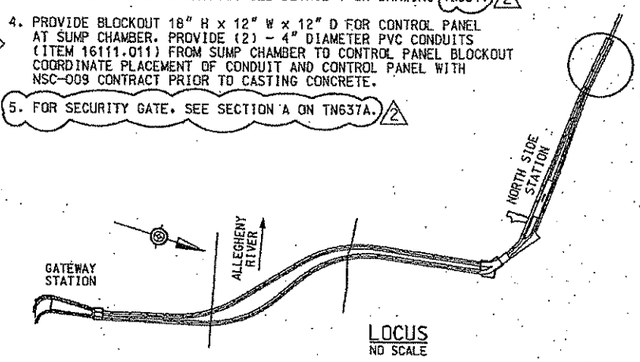

LOCUS
NO SCALE

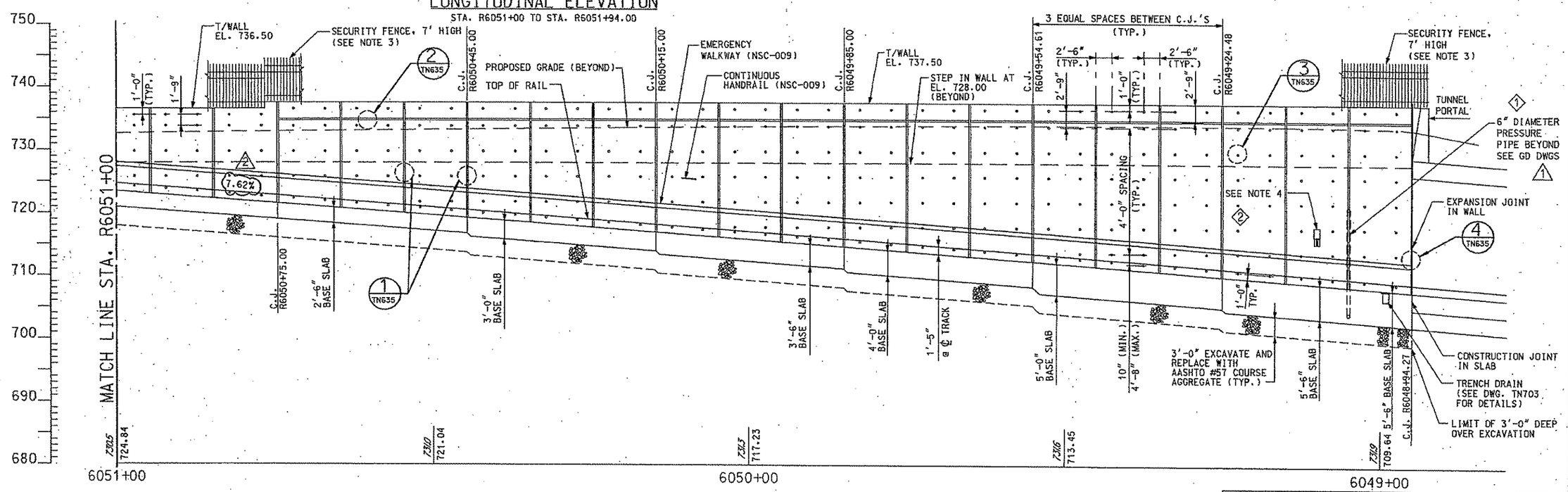

LONGITUDINAL ELEVATION

STA. R6048+95 TO STA. R6051+00

NO.	DATE	DESCRIPTION
4	4/16/08	REVISION 7 - DRAWING MODIFIED
3	07/03/07	REVISION 3 - RELOCATED PIPE
2	12/21/05	ADDENDUM 3 - DRAWING MODIFIED
1	12/09/05	ADDENDUM 2 - DRAWING MODIFIED

REVISIONS

THE PREPARATION OF THIS DOCUMENT HAS BEEN FINANCED IN PART THROUGH A GRANT FROM THE FEDERAL TRANSIT ADMINISTRATION, U.S. DEPARTMENT OF TRANSPORTATION, UNDER THE URBAN MASS TRANSPORTATION ACT OF 1964, AS AMENDED. FOR THE PORT AUTHORITY OF ALLEGHENY COUNTY, PENNSYLVANIA.

COMMONWEALTH OF PENNSYLVANIA REGISTERED PROFESSIONAL ENGINEER PETER DENNIS MAURITZ

SIGNATURE

DMJM HARRIS | AECOM
FOUR GATEWAY CENTER
20TH FLOOR
PITTSBURGH, PA. 15222

APPROVED — DATE 4/17/08

DESIGNED	WBT
DRAWN	DJR
CHECKED	PDM
IN CHARGE	PAR
DATE	NOV. 2, 2005
SCALE	1/8"=1'-0"

8' 4' 0 8'

PORT AUTHORITY OF ALLEGHENY COUNTY
PITTSBURGH PENNSYLVANIA

NORTH SHORE CONNECTOR
NORTH SIDE STATION AND CUT & COVER TUNNEL WEST
RIGHT BOAT WALL LONGITUDINAL ELEVATION
STA. R6048+95 TO STA. R6051+94.00

PORT AUTHORITY

CONTRACT NO. NSC-006
DWG. NO. TN636-2 SHT. 75-2

NOTES:

1. FOR GENERAL NOTES, SEE DRAWINGS TN100 AND TN101.
2. LEFT ELEVATION IS CUT FROM THE ℄ OF THE LEFT TRACK BASELINE, LOOKING UPSTATION AND LOOKING TO THE LEFT.
3. SEE DRAWINGS TN683 TO TN685 FOR PANEL TYPE REINFORCING.

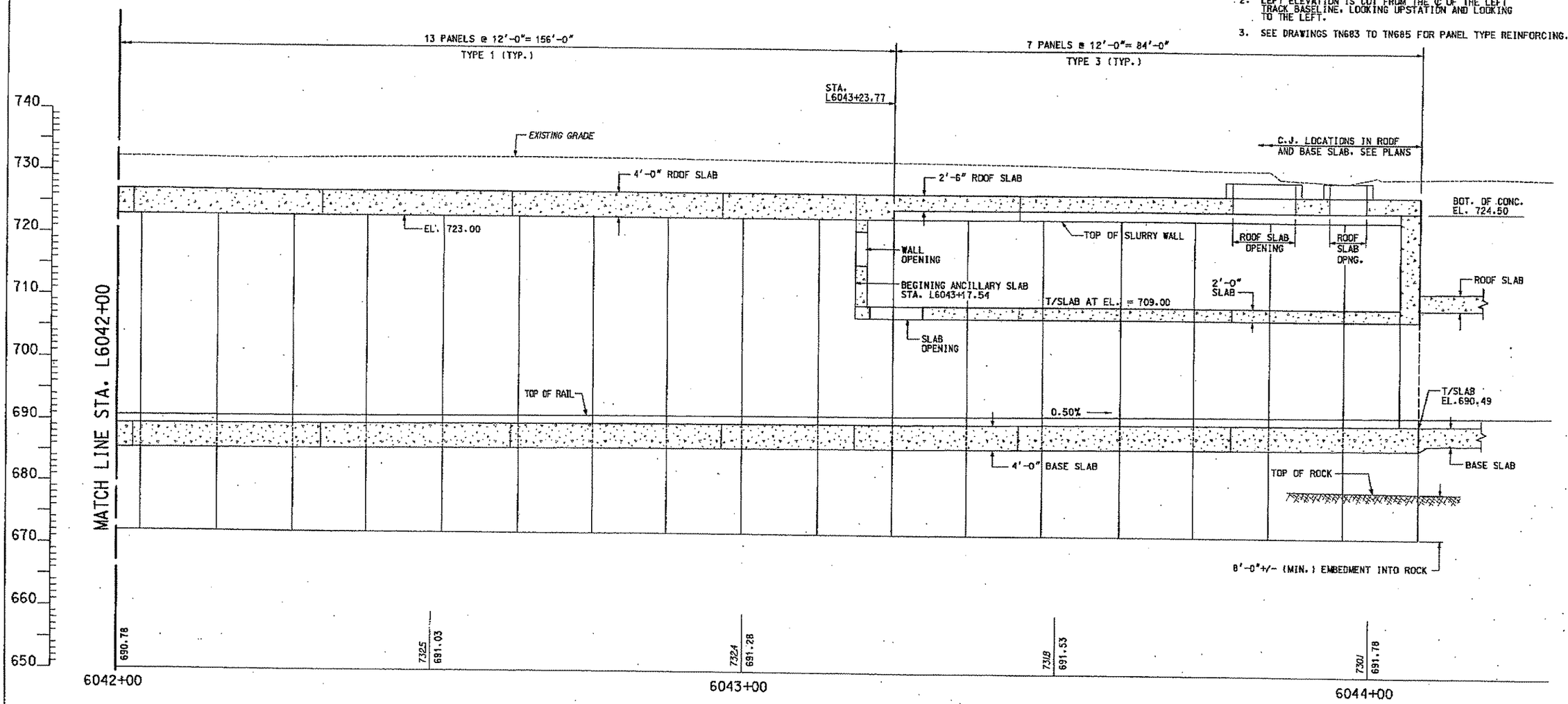

SLURRY WALL LEFT TRACK ELEVATION

STA. L6042+00 TO STA. L6044+07.77

NO.	DATE	DESCRIPTION

REVISIONS

THE PREPARATION OF THIS DOCUMENT HAS BEEN FINANCED IN PART THROUGH A GRANT FROM THE FEDERAL TRANSIT ADMINISTRATION, U.S. DEPARTMENT OF TRANSPORTATION, UNDER THE URBAN MASS TRANSPORTATION ACT OF 1964, AS AMENDED, FOR THE PORT AUTHORITY OF ALLEGHENY COUNTY, PENNSYLVANIA.

COMMONWEALTH OF PENNSYLVANIA — REGISTERED PROFESSIONAL ENGINEER — PETER DENNIS MAURITZ — PE071163

SIGNATURE

DM|M HARRIS | AECOM
FOUR GATEWAY CENTER
20TH FLOOR
PITTSBURGH, PA. 15222

APPROVED — DATE 11-2-05

DESIGNED	RMG
DRAWN	DC
CHECKED	TH
IN CHARGE	PAR
DATE	NOV. 2, 2005
SCALE	1/8"=1'-0"

8' 4' 0 8'

PORT AUTHORITY OF ALLEGHENY COUNTY
PITTSBURGH PENNSYLVANIA

NORTH SHORE CONNECTOR
NORTH SIDE STATION AND CUT & COVER TUNNEL WEST
LEFT TRACK SLURRY WALL ELEVATION
STA. L6042+00 TO STA. L6044+07.77

PORT AUTHORITY

CONTRACT NO. NSC-006
DWG. NO. TN643 SHT. 80

10/26/2005 4:44:16 PM
n:\nsf\final\gw\ns oke\06tn643.dgn

NOTES:

1. FOR GENERAL NOTES, SEE DRAWINGS TN100 AND TN101.
2. RIGHT ELEVATION IS CUT FROM THE ℄ OF THE RIGHT TRACK BASELINE, LOOKING DOWN STATION AND LOOKING TO THE LEFT.
3. SEE DRAWINGS TN683 TO TN685 FOR PANEL TYPE REINFORCING.

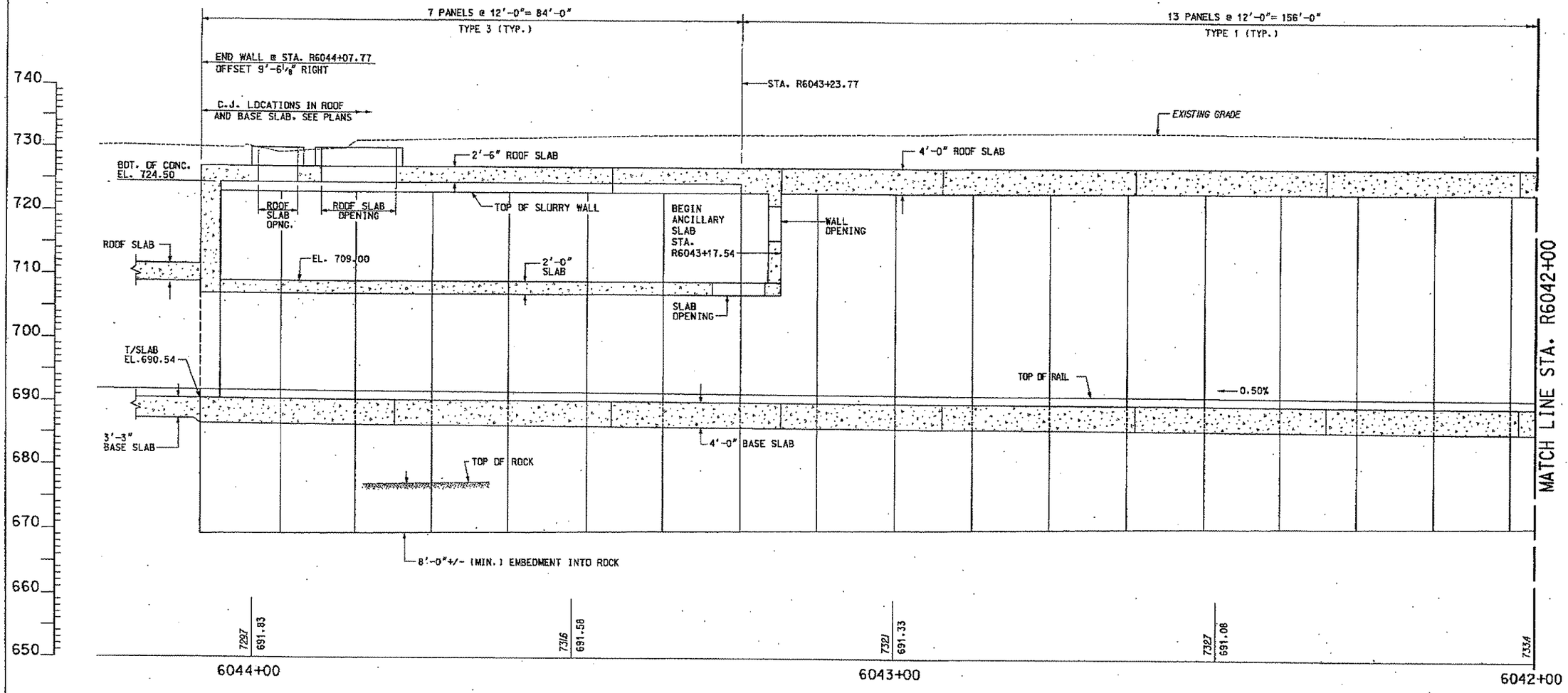

SLURRY WALL RIGHT TRACK ELEVATION

STA. R6042+00 TO STA. R6044+07.77

NO.	DATE	DESCRIPTION

REVISIONS

THE PREPARATION OF THIS DOCUMENT HAS BEEN FINANCED IN PART THROUGH A GRANT FROM THE FEDERAL TRANSIT ADMINISTRATION, U.S. DEPARTMENT OF TRANSPORTATION, UNDER THE URBAN MASS TRANSPORTATION ACT OF 1964, AS AMENDED, FOR THE PORT AUTHORITY OF ALLEGHENY COUNTY, PENNSYLVANIA.

COMMONWEALTH OF PENNSYLVANIA REGISTERED PROFESSIONAL ENGINEER PETER DENNIS MAURITZ PE071183

SIGNATURE

DMJM HARRIS | AECOM
FOUR GATEWAY CENTER
20TH FLOOR
PITTSBURGH, PA. 15222

APPROVED — 11-2-05 DATE

DESIGNED	RNG
DRAWN	DC
CHECKED	TH
IN CHARGE	PAR
DATE	NOV. 2, 2005
SCALE	1/8"=1'-0"

8' 4' 0 8'

PORT AUTHORITY OF ALLEGHENY COUNTY
PITTSBURGH PENNSYLVANIA

NORTH SHORE CONNECTOR
NORTH SIDE STATION AND CUT & COVER TUNNEL WEST
RIGHT TRACK SLURRY WALL ELEVATION
STA. R6042+00 TO STA. R6044+07.77

PORT AUTHORITY

CONTRACT NO. NSC-096
DWG. NO. TN644 SHT. 01

10/26/2005 4:44:41 PM
n:\nsc\final\gravns c&o\06tn644_r.dgn

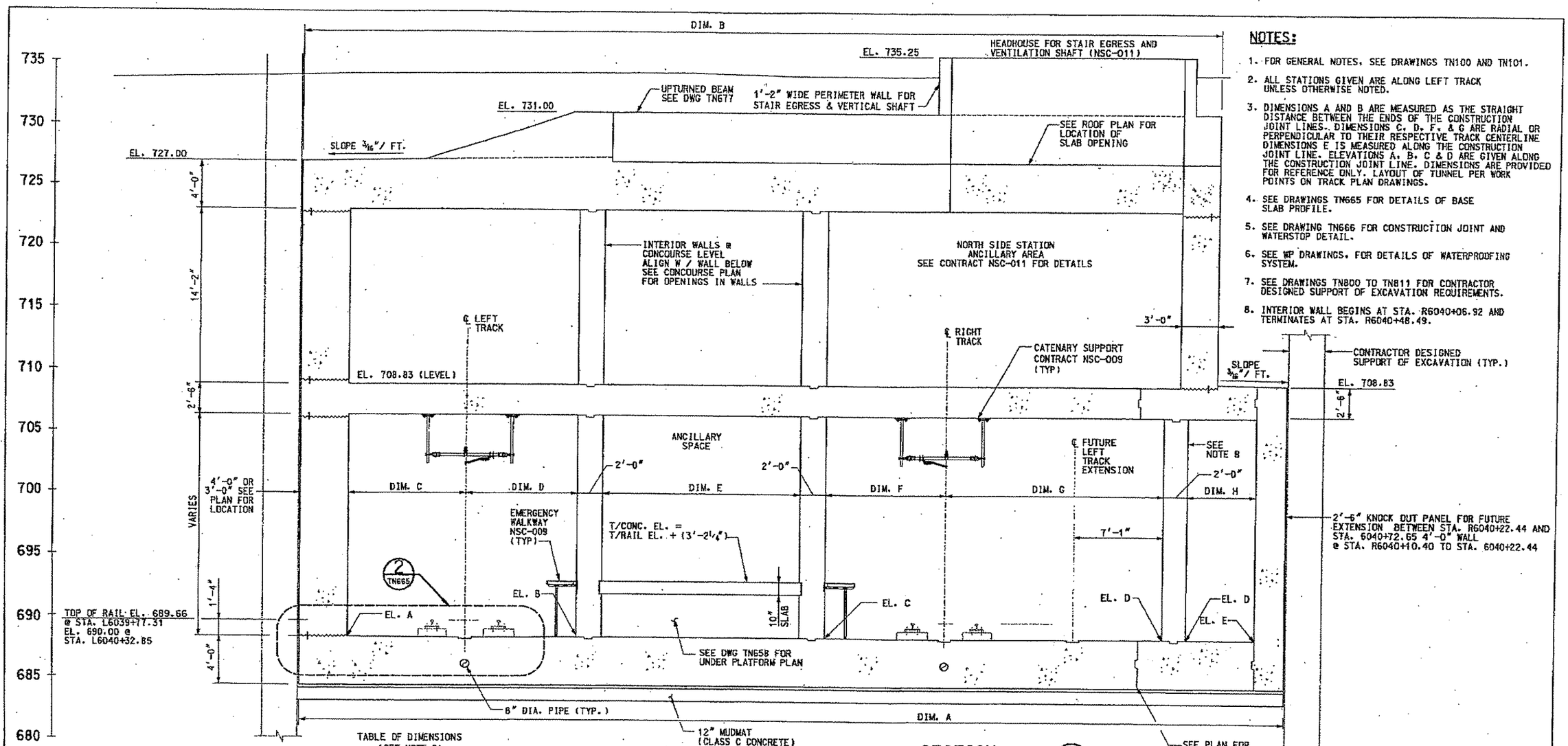

SECTION A

STA. L6039+77.31 TO STA. L6040+32.85 (TN610) (TN618, TN622)

NOTES:

1. FOR GENERAL NOTES, SEE DRAWINGS TN100 AND TN101.
2. ALL STATIONS GIVEN ARE ALONG LEFT TRACK UNLESS OTHERWISE NOTED.
3. DIMENSIONS A AND B ARE MEASURED AS THE STRAIGHT DISTANCE BETWEEN THE ENDS OF THE CONSTRUCTION JOINT LINES. DIMENSIONS C, D, F, & G ARE RADIAL OR PERPENDICULAR TO THEIR RESPECTIVE TRACK CENTERLINE DIMENSIONS E IS MEASURED ALONG THE CONSTRUCTION JOINT LINE. ELEVATIONS A, B, C & D ARE GIVEN ALONG THE CONSTRUCTION JOINT LINE. DIMENSIONS ARE PROVIDED FOR REFERENCE ONLY. LAYOUT OF TUNNEL PER WORK POINTS ON TRACK PLAN DRAWINGS.
4. SEE DRAWINGS TN665 FOR DETAILS OF BASE SLAB PROFILE.
5. SEE DRAWING TN666 FOR CONSTRUCTION JOINT AND WATERSTOP DETAIL.
6. SEE WP DRAWINGS, FOR DETAILS OF WATERPROOFING SYSTEM.
7. SEE DRAWINGS TN800 TO TN811 FOR CONTRACTOR DESIGNED SUPPORT OF EXCAVATION REQUIREMENTS.
8. INTERIOR WALL BEGINS AT STA. R6040+06.92 AND TERMINATES AT STA. R6040+48.49.

TABLE OF DIMENSIONS (SEE NOTE 2)

STA.		A	B	C	D	E	F	G	H	EL. A	EL. B	EL. C	EL. D	EL. E
L6039+77.31		68'-5 3/8"	68'-5 3/8"	9'-4 3/4"	9'-0"	SEE **	11'-7 5/8"	9'-4 1/4"	16'-5"	688.32	688.32	688.36	688.35	688.34
L6039+93.00	C.J.	72'-6 3/8"	66'-9 3/8"	9'-5 1/8"	9'-0"	14'-0 7/8"	9'-4 3/4"	13'-5 3/8"	6'-3"	688.40	688.40	688.45	688.50	688.44
L6040+25.03	C.J.	72'-7 1/4"	66'-11 5/8"	9'-5 3/4"	9'-0"	18'-10 7/8"	9'-4 3/4"	16'-4"*	–	688.56	688.56	688.63	N/A	688.58
L6040+32.85		72'-7 1/2"	67'-0"	9'-6"	9'-0"	19'-6"	9'-4 3/4"	12'-7 1/4"*	–	688.60	688.60	688.67	N/A	688.67

** NOSE OF WALL, SEE PLAN FOR DIMENSION
C.J. DENOTES CONSTRUCTION JOINT
* INTERIOR WALL TERMINATED, DISTANCE MEASURED TO EXTERIOR WALL

NO.	DATE	DESCRIPTION

REVISIONS

THE PREPARATION OF THIS DOCUMENT HAS BEEN FINANCED IN PART THROUGH A GRANT FROM THE FEDERAL TRANSIT ADMINISTRATION, U.S. DEPARTMENT OF TRANSPORTATION, UNDER THE URBAN MASS TRANSPORTATION ACT OF 1964, AS AMENDED, FOR THE PORT AUTHORITY OF ALLEGHENY COUNTY, PENNSYLVANIA.

COMMONWEALTH OF PENNSYLVANIA REGISTERED PROFESSIONAL ENGINEER PETER DENNIS MAURITZ PE027163
SIGNATURE

DMJM HARRIS | AECOM
FOUR GATEWAY CENTER
20TH FLOOR
PITTSBURGH, PA. 15222
APPROVED 11-2-05 DATE

DESIGNED AP
DRAWN NPD
CHECKED PDM
IN CHARGE PAR
DATE NOV. 2, 2005
SCALE 1/4"=1'-0"

PORT AUTHORITY OF ALLEGHENY COUNTY
PITTSBURGH PENNSYLVANIA

NORTH SHORE CONNECTOR
NORTH SIDE STATION AND CUT & COVER TUNNEL WEST
TUNNEL CROSS SECTION GEOMETRY
STA. L6039+77.31 TO STA. L6040+32.85

PORT AUTHORITY

CONTRACT NO. NSC-606
DWG. NO. TN650 SHT. 34

10/26/2005 4:44:00
m:\nsf\final\pw\ms cdot\05tn650.dgn

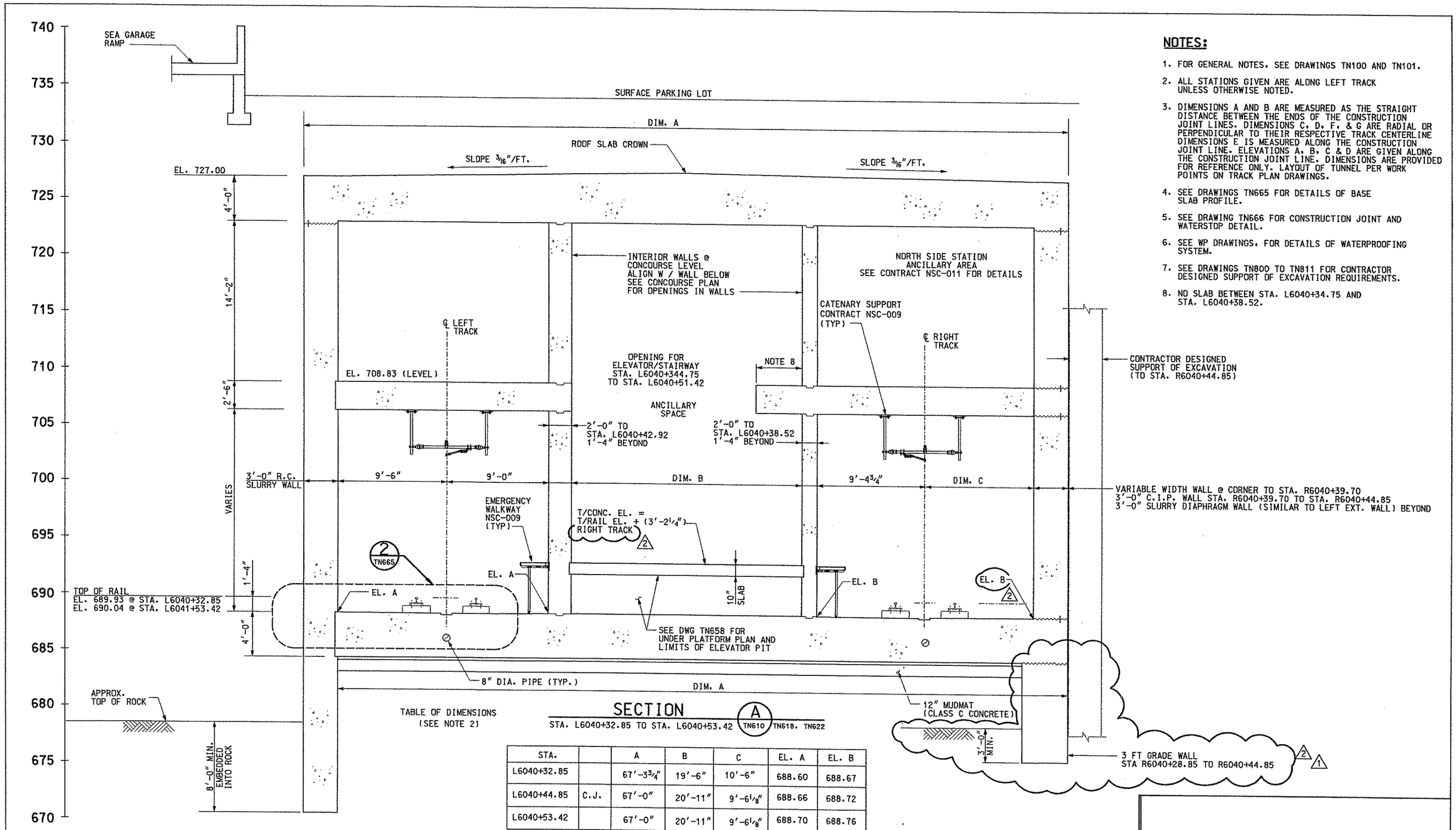

STA.		A	B	C	EL. A	EL. B
L6040+32.85		67'-3 3/4"	19'-6"	10'-6"	688.60	688.67
L6040+44.85	C.J.	67'-0"	20'-11"	9'-6 1/8"	688.66	688.72
L6040+53.42		67'-0"	20'-11"	9'-6 1/8"	688.70	688.76

C.J. DENOTES CONSTRUCTION JOINT

NOTES:

1. FOR GENERAL NOTES, SEE DRAWINGS TN100 AND TN101.
2. ALL STATIONS GIVEN ARE ALONG LEFT TRACK UNLESS OTHERWISE NOTED.
3. DIMENSIONS A AND B ARE MEASURED AS THE STRAIGHT DISTANCE BETWEEN THE ENDS OF THE CONSTRUCTION JOINT LINES. DIMENSIONS C, D, F, & G ARE RADIAL OR PERPENDICULAR TO THEIR RESPECTIVE TRACK CENTERLINE DIMENSIONS E IS MEASURED ALONG THE CONSTRUCTION JOINT LINE. ELEVATIONS A, B, C & D ARE GIVEN ALONG THE CONSTRUCTION JOINT LINE. DIMENSIONS ARE PROVIDED FOR REFERENCE ONLY. LAYOUT OF TUNNEL PER WORK POINTS ON TRACK PLAN DRAWINGS.
4. SEE DRAWINGS TN665 FOR DETAILS OF BASE SLAB PROFILE.
5. SEE DRAWING TN666 FOR CONSTRUCTION JOINT AND WATERSTOP DETAIL.
6. SEE WP DRAWINGS, FOR DETAILS OF WATERPROOFING SYSTEM.
7. SEE DRAWINGS TN800 TO TN811 FOR CONTRACTOR DESIGNED SUPPORT OF EXCAVATION REQUIREMENTS.
8. NO SLAB BETWEEN STA. L6040+34.75 AND STA. L6040+38.52.

NO.	DATE	DESCRIPTION
2	5/09/08	REVISION 8 - SEA GARAGE REVISIONS
1	1/27/08	REVISION 6 - SEA GARAGE REVISIONS

REVISIONS

THE PREPARATION OF THIS DOCUMENT HAS BEEN FINANCED IN PART THROUGH A GRANT FROM THE FEDERAL TRANSIT ADMINISTRATION, U.S. DEPARTMENT OF TRANSPORTATION, UNDER THE URBAN MASS TRANSPORTATION ACT OF 1964, AS AMENDED. FOR THE PORT AUTHORITY OF ALLEGHENY COUNTY, PENNSYLVANIA.

COMMONWEALTH OF PENNSYLVANIA REGISTERED PROFESSIONAL ENGINEER PETER DENNIS MAURITZ

SIGNATURE

DMJM HARRIS | AECOM
FOUR GATEWAY CENTER
20TH FLOOR
PITTSBURGH, PA. 15222

APPROVED — DATE 5/21/08

DESIGNED	RMG/TH
DRAWN	AR
CHECKED	PDM
IN CHARGE	PAR
DATE	NOV. 2, 2005
SCALE	1/4"=1'-0"

4' 2' 0 4'

PORT AUTHORITY OF ALLEGHENY COUNTY
PITTSBURGH PENNSYLVANIA

NORTH SHORE CONNECTOR
NORTH SIDE STATION AND CUT & COVER TUNNEL WEST
STATION CROSS SECTION GEOMETRY
STA. L6040+32.85 TO STA. L6040+53.42

PORT AUTHORITY

CONTRACT NO. NSC-006
DWG. NO. TN651-2 SHT. 85-2

$TIME$
$DATE$
$FILE$

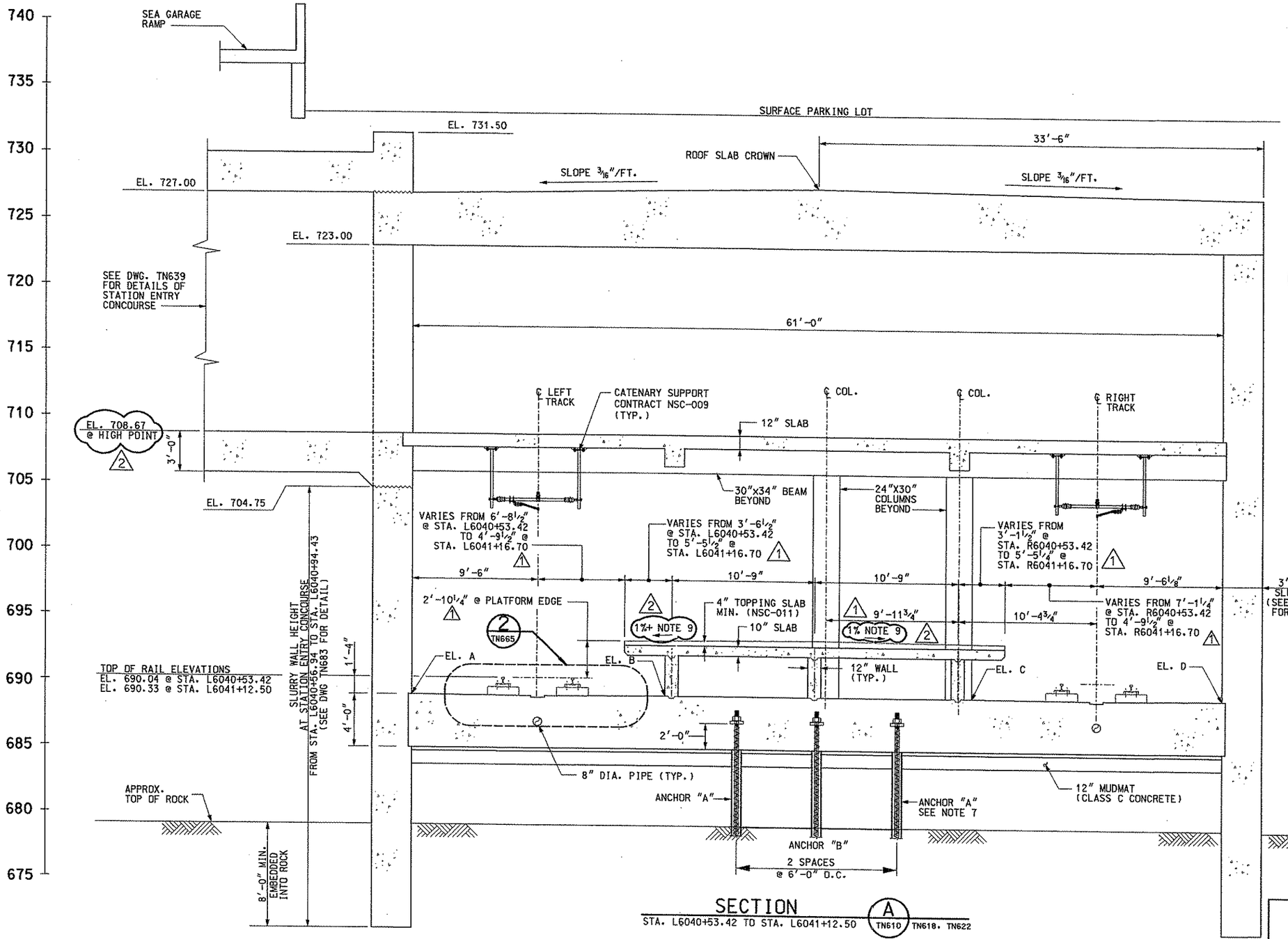

SECTION A

STA. L6040+53.42 TO STA. L6041+12.50 (TN610) (TN618, TN622)

NOTES:

1. FOR GENERAL NOTES, SEE DRAWINGS TN100 AND TN101.
2. ELEVATION A, B, C AND D ARE GIVEN ALONG THE CONSTRUCTION JOINT LINE.
3. SEE DRAWINGS TN665 FOR DETAILS OF BASE SLAB PROFILE.
4. SEE DRAWING TN666 FOR CONSTRUCTION JOINT AND WATERSTOP DETAIL.
5. SEE WP DRAWINGS FOR DETAILS OF WATERPROOFING SYSTEM.
6. SEE DRAWING TN805 FOR SUPPORT OF EXCAVATION AT SLURRY WALLS.
7. SEE DRAWING TN653 FOR BASE ANCHOR (PERMANENT GROUND ANCHOR) NOTES AND DETAILS.
8. PLATFORM TO HAVE BROOM FINISH ONLY, NO SEALER. (1)
9. PLATFORM CONCRETE IS LEVEL, THE 1 % +/- WILL BE MADE UP IN THE NSC-011 TOPPING SLAB. (2)

TABLE OF ELEVATIONS
(SEE NOTE 2)

STA.	LINE	EL. A	EL. B	EL. C	EL. D
L6040+53.42	NOTE A	688.70	688.70	688.76	688.76
L6040+81.25	C.J.	688.84	688.84	688.90	688.90
L6041+12.50	C.J.	689.00	689.00	689.06	689.06

NOTE A: END OF INTERIOR CENTER WALLS
C.J. DENOTES CONSTRUCTION JOINT

NO.	DATE	DESCRIPTION
2	5/09/08	REVISION 8 - ADD TOPPING SLAB NOTE, MOD MEZZ ELEV
1	1/27/08	REVISION 6 - TOPPING SLAB REVISION

REVISIONS

THE PREPARATION OF THIS DOCUMENT HAS BEEN FINANCED IN PART THROUGH A GRANT FROM THE FEDERAL TRANSIT ADMINISTRATION, U.S. DEPARTMENT OF TRANSPORTATION, UNDER THE URBAN MASS TRANSPORTATION ACT OF 1964, AS AMENDED. FOR THE PORT AUTHORITY OF ALLEGHENY COUNTY, PENNSYLVANIA.

COMMONWEALTH OF PENNSYLVANIA REGISTERED PROFESSIONAL ENGINEER PETER DENNIS MAURITZ

SIGNATURE

DMJM HARRIS | AECOM
FOUR GATEWAY CENTER
20TH FLOOR
PITTSBURGH, PA. 15222

APPROVED — DATE 5/27/08

DESIGNED	RMG
DRAWN	NPD
CHECKED	PDM
IN CHARGE	PAR
DATE	NOV. 2, 2005
SCALE	1/4"=1'-0"

4' 2' 0 4'

PORT AUTHORITY OF ALLEGHENY COUNTY
PITTSBURGH PENNSYLVANIA

NORTH SHORE CONNECTOR
NORTH SIDE STATION AND CUT & COVER TUNNEL WEST
STATION CROSS SECTION GEOMETRY
STA. L6040+53.42 TO STA. L6041+12.50

PORT AUTHORITY

CONTRACT NO. NSC-006
DWG. NO. TN652-2 SHT. 86-2

$DATE$ $TIME$
$FILE$

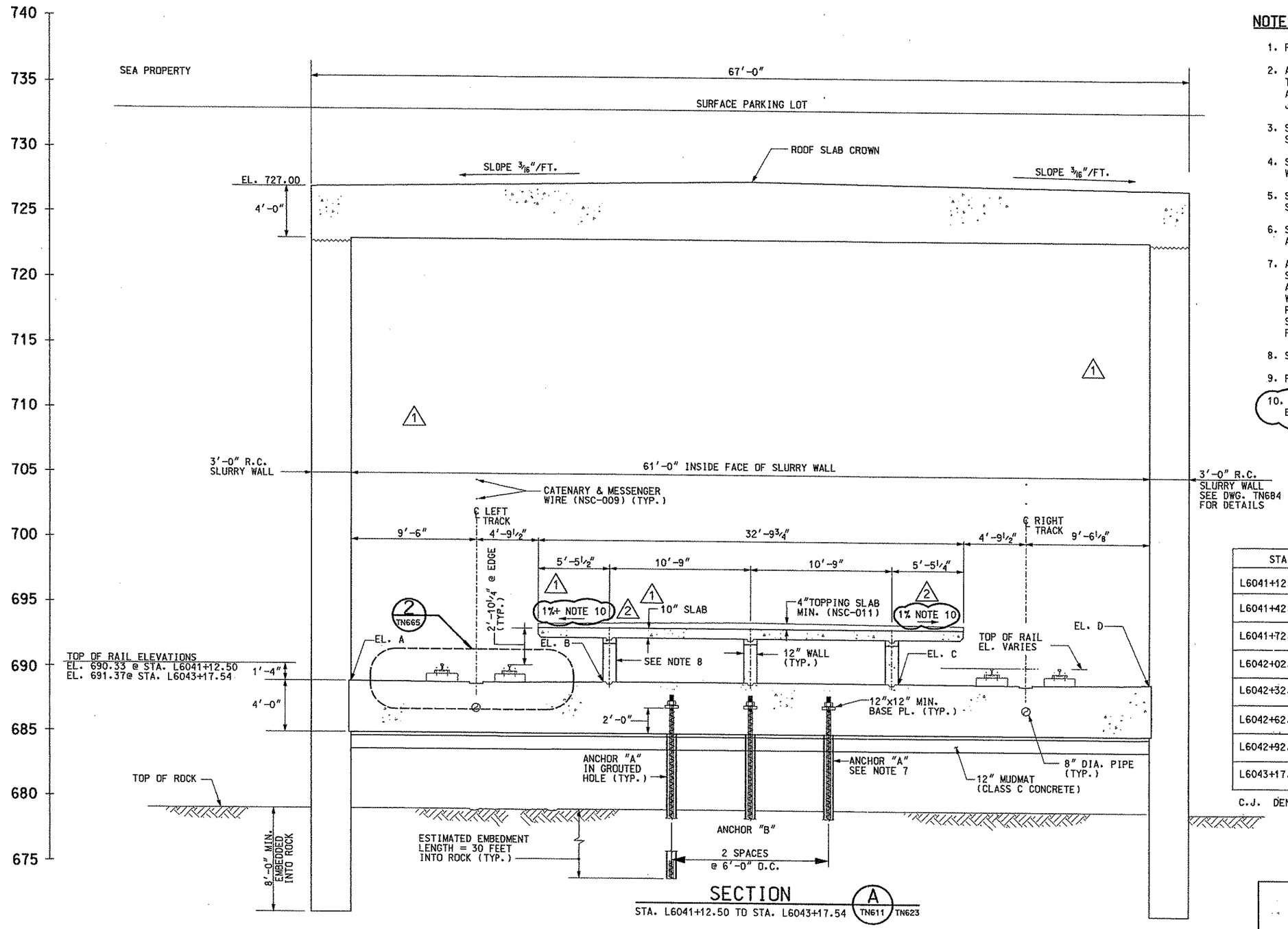

SECTION A

STA. L6041+12.50 TO STA. L6043+17.54 (TN611) (TN623)

NOTES:

1. FOR GENERAL NOTES, SEE DRAWINGS TN100 AND TN101.
2. ALL HORIZONTAL DIMENSIONS ARE PERPENDICULAR TO THE LEFT TRACK CENTERLINE. ELEVATIONS A, B, C AND D ARE GIVEN ALONG THE CONSTRUCTION JOINT LINE.
3. SEE DRAWING TN665, FOR DETAILS OF BASE SLAB PROFILE.
4. SEE DRAWING TN666, FOR CONSTRUCTION JOINT AND WATERSTOP DETAIL.
5. SEE WP DRAWINGS, FOR DETAILS OF WATERPROOFING SYSTEM.
6. SEE DRAWING TN805, FOR SUPPORT OF EXCAVATION AT SLURRY WALLS.
7. ANCHOR "A" - 2 ANCHORS PER ROW AT 12 FEET ON CENTER SPACED AT 10 FEET LONGITUDINALLY. ANCHOR "B" - SINGLE ANCHOR AT 10 FEET ON CENTER LONGITUDINALLY, STAGGER WITH ANCHOR "A" . ANCHOR CAPACITY LOAD EQUAL 235 KIPS FOR NORMAL HIGH WATER AND 270 KIPS FOR 100 YEAR FLOOD SEE TECHNICAL PROVISION 02155 FOR REQUIREMENTS FOR PERMANENT GROUND ANCHORS
8. SEE DRAWING TN611 FOR UNDER PLATFORM ACCESS OPENINGS.
9. PLATFORM TO HAVE BROOM FINISH ONLY, NO SEALER. (1)
10. PLATFORM CONCRETE IS LEVEL, THE 1 % +/- SLOPE WILL BE MADE UP IN THE NSC-011 TOPPING SLAB. (2)

TABLE OF DIMENSIONS

STA.	LINE	EL. A	EL. B	EL. C	EL. D
L6041+12.50	C.J.	689.00	689.00	689.06	689.06
L6041+42.50	C.J.	689.15	689.15	689.21	689.21
L6041+72.50	C.J.	689.30	689.30	689.36	689.36
L6042+02.50	C.J.	689.46	689.46	689.51	689.51
L6042+32.50	C.J.	689.61	689.61	689.66	689.66
L6042+62.50	C.J.	689.76	689.76	689.81	689.81
L6042+92.50	C.J.	689.91	689.91	689.96	689.96
L6043+17.54	C.J.	690.03	690.03	690.08	690.08

C.J. DENOTES CONSTRUCTION JOINT

NO.	DATE	DESCRIPTION
2	5/09/08	REVISION 8 - ADDED TOPPING SLAB NOTE
1	1/27/08	REVISION 6 - TOPPING SLAB REVISION

REVISIONS

THE PREPARATION OF THIS DOCUMENT HAS BEEN FINANCED IN PART THROUGH A GRANT FROM THE FEDERAL TRANSIT ADMINISTRATION, U.S. DEPARTMENT OF TRANSPORTATION, UNDER THE URBAN MASS TRANSPORTATION ACT OF 1964, AS AMENDED. FOR THE PORT AUTHORITY OF ALLEGHENY COUNTY, PENNSYLVANIA.

COMMONWEALTH OF PENNSYLVANIA REGISTERED PROFESSIONAL ENGINEER PETER DENNIS MAURITZ

SIGNATURE

DMJM HARRIS | AECOM
FOUR GATEWAY CENTER
20TH FLOOR
PITTSBURGH, PA. 15222

APPROVED 5/27/08 DATE

DESIGNED	RMG
DRAWN	NPD
CHECKED	PDM
IN CHARGE	PAR
DATE	NOV. 2, 2005
SCALE	1/4"=1'-0"

4' 2' 0 4'

PORT AUTHORITY OF ALLEGHENY COUNTY
PITTSBURGH PENNSYLVANIA

NORTH SHORE CONNECTOR
NORTH SIDE STATION AND CUT & COVER TUNNEL WEST
STATION CROSS SECTION GEOMETRY
STA. L6041+12.50 TO STA. L6043+17.54

PORT AUTHORITY

CONTRACT NO. NSC-006
DWG. NO. TN653-2 SHT. 87-2

$TIME$
$DATE$
$FILE$

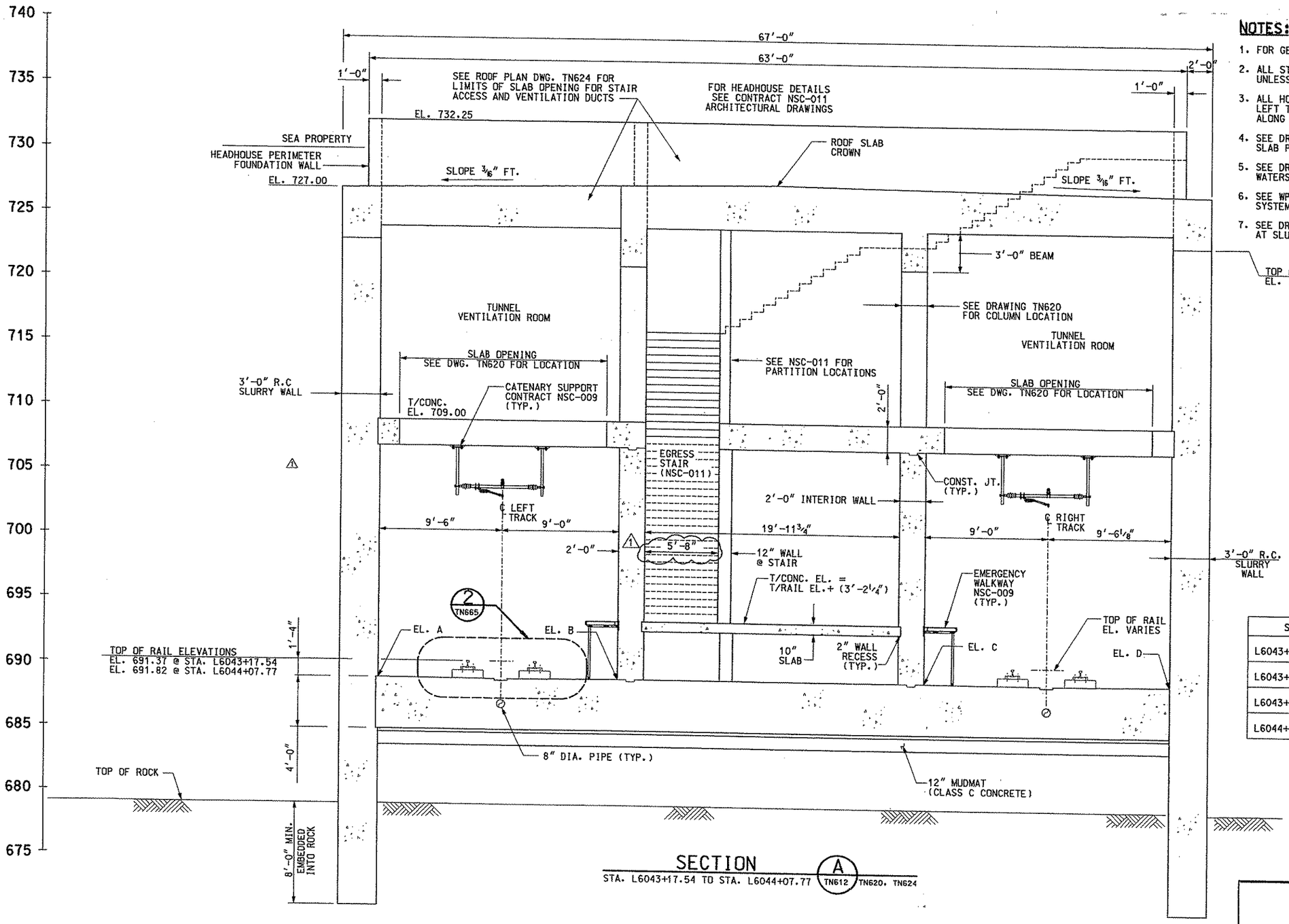

SECTION A

STA. L6043+17.54 TO STA. L6044+07.77 (TN612, TN620, TN624)

NOTES:

1. FOR GENERAL NOTES, SEE DRAWING TN100 AND TN101.
2. ALL STATIONS GIVEN ARE ALONG LEFT TRACK UNLESS OTHERWISE NOTED.
3. ALL HORIZONTAL DIMENSIONS ARE PERPENDICULAR TO THE LEFT TRACK CENTERLINE. ELEVATIONS A, B, C & D ARE GIVEN ALONG THE CONSTRUCTION JOINT.
4. SEE DRAWING TN665, FOR DETAILS OF BASE SLAB PROFILE.
5. SEE DRAWING TN666, FOR CONSTRUCTION JOINT AND WATERSTOP DETAIL.
6. SEE WP DRAWINGS, FOR DETAILS OF WATERPROOFING SYSTEM.
7. SEE DRAWING TN805, FOR SUPPORT OF EXCAVATION AT SLURRY WALLS.

TABLE OF DIMENSIONS

STA.	LINE	EL. A	EL. B	EL. C	EL. D
L6043+17.54	C.J.	690.03	690.03	690.08	690.08
L6043+44.00	C.J.	690.17	690.17	690.22	690.22
L6043+77.63	C.J.	690.33	690.33	690.38	690.38
L6044+07.77	C.J.	690.49	690.49	690.54	690.54

C.J. DENOTES CONSTRUCTION JOINT

NO.	DATE	DESCRIPTION
1	5/09/08	REVISION 8 - MODIFIED STAIR DIMENSION

REVISIONS

THE PREPARATION OF THIS DOCUMENT HAS BEEN FINANCED IN PART THROUGH A GRANT FROM THE FEDERAL TRANSIT ADMINISTRATION, U.S. DEPARTMENT OF TRANSPORTATION, UNDER THE URBAN MASS TRANSPORTATION ACT OF 1964, AS AMENDED. FOR THE PORT AUTHORITY OF ALLEGHENY COUNTY, PENNSYLVANIA.

COMMONWEALTH OF PENNSYLVANIA REGISTERED PROFESSIONAL PETER DENNIS MARRITZ CHARGER PENNSYLVANIA

SIGNATURE

DMJM HARRIS | AECOM
FOUR GATEWAY CENTER
20TH FLOOR
PITTSBURGH, PA. 15222

APPROVED — DATE 5/21/08

DESIGNED	RMG
DRAWN	NPD
CHECKED	PDM
IN CHARGE	PAR
DATE	NOV. 2, 2005
SCALE	1/4"=1'-0"

4' 2' 0 4'

PORT AUTHORITY OF ALLEGHENY COUNTY
PITTSBURGH PENNSYLVANIA

NORTH SHORE CONNECTOR
NORTH SIDE STATION AND CUT & COVER TUNNEL WEST
STATION SECTION GEOMETRY
STA. L6043+17.54 TO STA. L6044+07.77

PORT AUTHORITY

CONTRACT NO. NSC-006
DWG. NO. TN654-1 SHT. 88-1

$DATE$ $TIME$
$FILE$

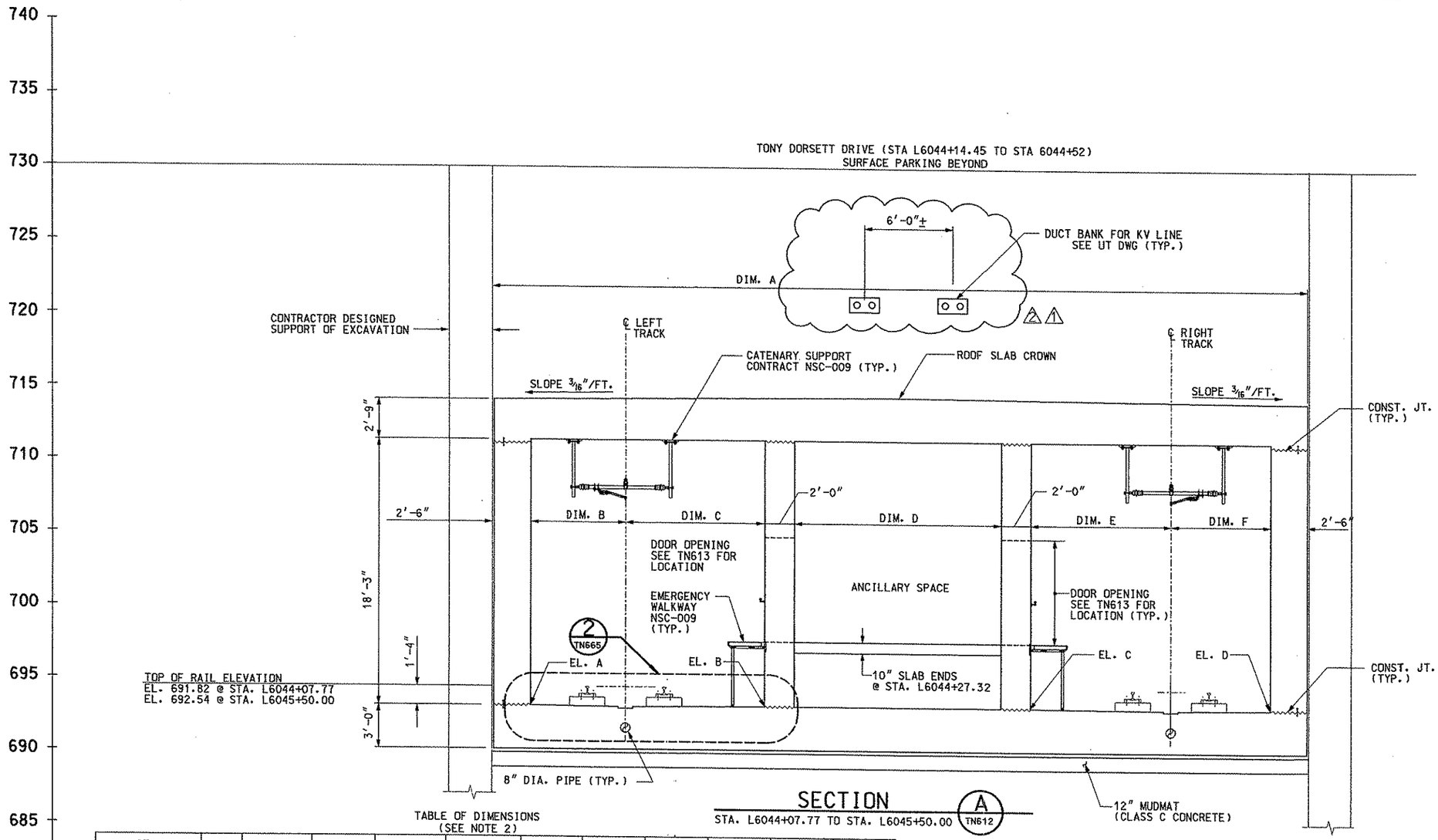

SECTION A

STA. L6044+07.77 TO STA. L6045+50.00 (TN612)

TABLE OF DIMENSIONS
(SEE NOTE 2)

STA.		A	B	C	D	E	F	EL. A	EL. B	EL. C	EL. D
L6044+07.77	C.J.	60'-11 5/8"	7'-0"	9'-0"	19'-11 3/4"	9'-0"	7'-0"	690.50	690.50	690.54	690.54
L6044+33.89	C.J.	60'-11 3/8"	7'-1 1/8"	9'-0 "	19'-2 3/4"	9'-7 7/8"	7'-0"	690.63	690.63	690.67	690.67
L6044+60.00	C.J.	60'-11"	7'-2 3/8"	9'-0 "	18'-5 3/4"	9'-11 1/4"	7'-3 1/2"	690.75	690.75	690.80	690.80
L6044+90.00	C.J.	59'-6 3/4"	7'-4"	9'-1 1/4"	17'-5 7/8"	9'-9"	6'-10 3/8"	690.90	690.90	690.95	690.95
L6045+20.00	C.J.	58'-1 1/2"	7'-6"	9'-1 3/8"	16'-6 1/8"	9'-0"	6'-11 7/8"	691.05	691.05	691.10	691.10
L6045+50.00	C.J.	56'-8 1/8"	7'-9 1/4"	9'-0"	13'-6"	9'-0"	7'-4 3/8"	691.21	691.21	691.25	691.24

C.J. DENOTES CONSTRUCTION JOINT

NOTES:

1. FOR GENERAL NOTES, SEE DRAWINGS TN100 AND TN101.
2. ALL STATIONS GIVEN ARE ALONG LEFT TRACK UNLESS OTHERWISE NOTED.
3. DIMENSIONS A AND D ARE MEASURED ALONG THE CONSTRUCTION JOINT LINE. DIMENSIONS B, C, E AND F ARE PERPENDICULAR TO THEIR RESPECTIVE TRACK CENTERLINES. ELEVATIONS A, B, C AND D ARE GIVEN ALONG THE CONSTRUCTION JOINT LINE. DIMENSIONS ARE PROVIDED FOR REFERENCE ONLY. LAYOUT OF TUNNEL PER WORK POINTS ON TRACK PLAN DRAWING.
4. SEE DRAWING TN665, FOR DETAILS OF BASE SLAB PROFILE.
5. SEE DRAWING TN666, FOR CONSTRUCTION JOINT AND WATERSTOP DETAIL.
6. SEE WP DRAWINGS, FOR DETAILS OF WATERPROOFING SYSTEM.
7. SEE DRAWINGS TN800 TO TN811, FOR CONTRACTOR DESIGNED SUPPORT OF EXCAVATION REQUIREMENTS.

NO.	DATE	DESCRIPTION
2	5/09/08	REVISION 8 - MODIFIED CONDUIT ORIENTATION
1	1/27/08	REVISION 6 - REVISED CONDUIT LOCATION

REVISIONS

THE PREPARATION OF THIS DOCUMENT HAS BEEN FINANCED IN PART THROUGH A GRANT FROM THE FEDERAL TRANSIT ADMINISTRATION, U.S. DEPARTMENT OF TRANSPORTATION, UNDER THE URBAN MASS TRANSPORTATION ACT OF 1964, AS AMENDED. FOR THE PORT AUTHORITY OF ALLEGHENY COUNTY, PENNSYLVANIA.

COMMONWEALTH OF PENNSYLVANIA REGISTERED PROFESSIONAL ENGINEER PETER DENNIS MAURITZ

SIGNATURE

DMJM HARRIS | AECOM
FOUR GATEWAY CENTER
20TH FLOOR
PITTSBURGH, PA. 15222

APPROVED 5/27/08 DATE

DESIGNED	RMG
DRAWN	NPD
CHECKED	CBB
IN CHARGE	PAR
DATE	NOV. 2, 2005
SCALE	1/4"=1'-0" (4' 2' 0 4')

PORT AUTHORITY OF ALLEGHENY COUNTY
PITTSBURGH PENNSYLVANIA

NORTH SHORE CONNECTOR
NORTH SIDE STATION AND CUT & COVER TUNNEL WEST
TUNNEL CROSS SECTION GEOMETRY
STA. L6044+07.77 TO STA. L6045+50.00

PORT AUTHORITY

CONTRACT NO. NSC-006
DWG. NO. TN655-2 SHT. 89-2

$TIME$
$DATE$
$FILE$

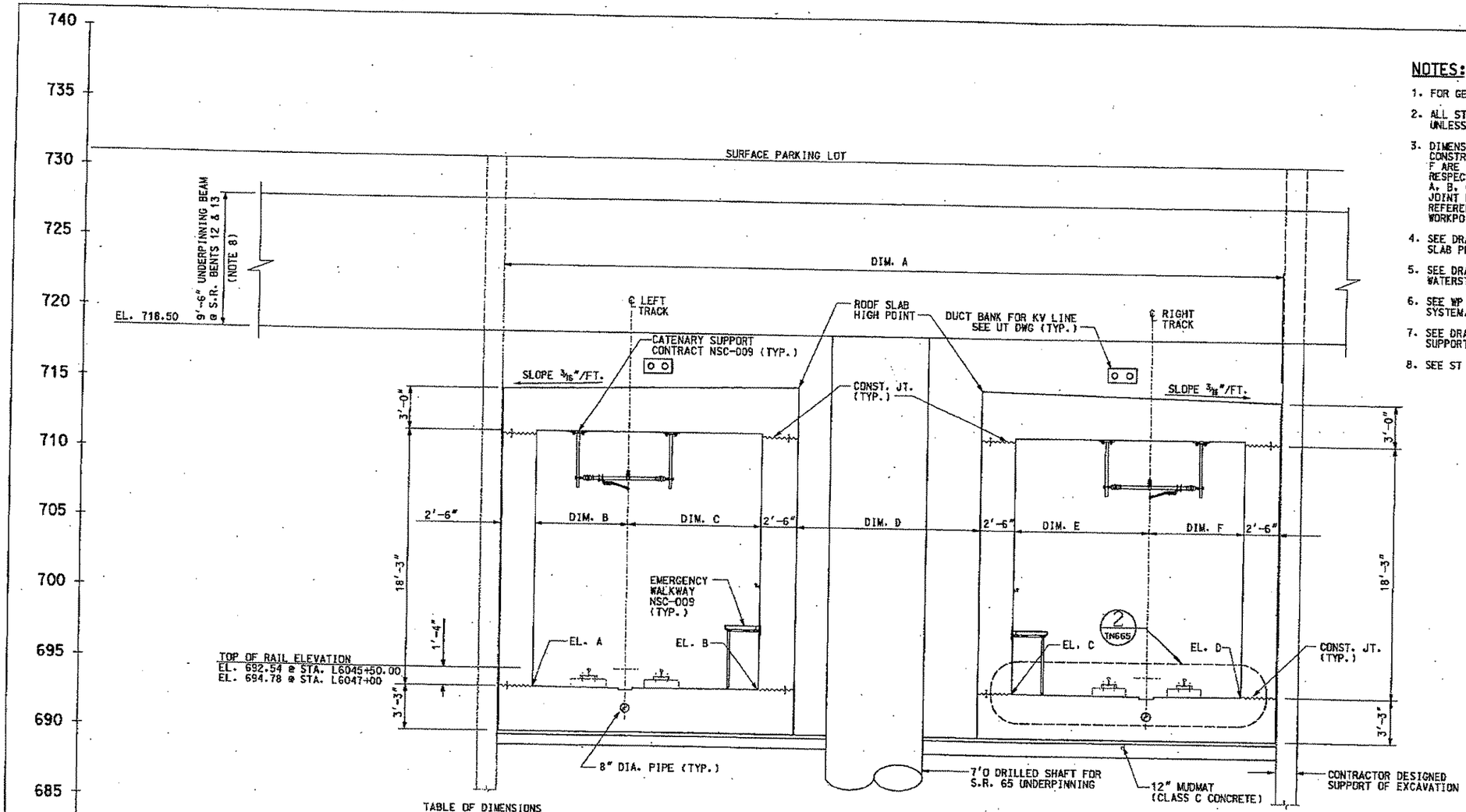

SECTION A TN613

STA. L6045+50.00 TO STA. L6047+00.00

TABLE OF DIMENSIONS (SEE NOTE 2)

STA.	LINE	A	B	C	D	E	F	EL. A	EL. B	EL. C	EL. D
L6045+50	C.J.	56'-8 1/8"	7'-9 1/4"	9'-0"	13'-6"	9'-0"	7'-4 3/8"	691.21	691.21	691.24	691.24
L6045+80	C.J.	55'-2 5/8"	8'-1 1/4"	9'-0"	11'-5 1/4"	9'-0"	7'-9 1/8"	691.36	691.36	691.39	691.39
L6046+10	C.J.	53'-9 3/8"	8'-5 1/4"	9'-0"	9'-3 1/4"	9'-0"	8'-1 7/8"	691.52	691.52	691.54	691.54
L6046+40	C.J.	52'-4 1/8"	8'-9 1/4"	9'-0"	7'-1 3/4"	9'-0"	8'-6 1/2"	691.66	691.66	691.79	691.78
L6046+70	C.J.	50'-10 7/8"	9'-1 1/8"	9'-0"	5'-0 1/4"	9'-0"	8'-11 1/4"	692.24	692.24	692.52	692.48
L6047+00	C.J.	49'- 5 3/4"	9'-5 1/8"	9'-0"	2'-8 1/8"	9'-0"	9'-3 7/8"	693.45	693.45	693.76	693.70

C.J. DENOTES CONSTRUCTION JOINT

NOTES:

1. FOR GENERAL NOTES. SEE DRAWINGS TN100 AND TN101.
2. ALL STATIONS GIVEN ARE ALONG LEFT TRACK UNLESS OTHERWISE NOTED.
3. DIMENSIONS A AND D ARE MEASURED ALONG THE CONSTRUCTION JOINT LINE. DIMENSIONS B, C, E AND F ARE RADIAL OR PERPENDICULAR TO THEIR RESPECTIVE TRACK CENTERLINE. ELEVATIONS A, B, C AND D ARE GIVEN ALONG THE CONSTRUCTION JOINT LINE. DIMENSIONS ARE PROVIDED FOR REFERENCE ONLY. LAYOUT OF TUNNEL PER WORKPOINTS ON TRACK PLAN DRAWINGS.
4. SEE DRAWING TN665. FOR DETAILS OF BASE SLAB PROFILE.
5. SEE DRAWING TN666. FOR CONSTRUCTION JOINT AND WATERSTOP DETAIL.
6. SEE WP DRAWINGS. FOR DETAILS OF WATERPROOFING SYSTEM.
7. SEE DRAWINGS TN800 TO TN811. FOR CONTRACTOR DESIGNED SUPPORT OF EXCAVATION REQUIREMENTS.
8. SEE ST DRAWINGS. FOR DETAILS OF S.R. 65 UNDERPINNING.

NO.	DATE	DESCRIPTION

REVISIONS

THE PREPARATION OF THIS DOCUMENT HAS BEEN FINANCED IN PART THROUGH A GRANT FROM THE FEDERAL TRANSIT ADMINISTRATION, U.S. DEPARTMENT OF TRANSPORTATION, UNDER THE URBAN MASS TRANSPORTATION ACT OF 1964, AS AMENDED, FOR THE PORT AUTHORITY OF ALLEGHENY COUNTY, PENNSYLVANIA.

COMMONWEALTH OF PENNSYLVANIA REGISTERED PROFESSIONAL ENGINEER PETER DENNIS MAURITZ PE071163

SIGNATURE

DMJM HARRIS | AECOM
FOUR GATEWAY CENTER
20TH FLOOR
PITTSBURGH, PA. 15222

APPROVED — DATE 11-2-05

DESIGNED KM
DRAWN NPD
CHECKED CBB
IN CHARGE PAR
DATE NOV. 2, 2005
SCALE 1/4"=1'-0"

PORT AUTHORITY OF ALLEGHENY COUNTY
PITTSBURGH PENNSYLVANIA

NORTH SHORE CONNECTOR
NORTH SIDE STATION AND CUT & COVER TUNNEL WEST
TUNNEL CROSS SECTION GEOMETRY
STA. L6045+50.00 TO STA. L6047+00

PORT AUTHORITY

CONTRACT NO. NSC-006
DWG. NO. TN656 SHT. 80

10/26/2005 5:59:24 PM
n:\nsf\find\gw\ns ca\06tn656.dgn

TABLE OF DIMENSIONS
(SEE NOTE 2)

STA.	LINE	A	B	C	D	E	F	EL. A	EL. B	EL. C	EL. D
L6047+00.00	C.J.	49'-5 3/4"	9'-5 1/8"	9'-0"	7'-8 1/4"	9'-0"	9'-3 7/8"	693.45	693.45	693.79	693.66
L6047+26.24	C.J.	48'-2 5/8"	9'-8 5/8"	9'-0"	5'-10 1/2"	8'-11"	9'-8"	695.03	695.05	695.26	695.19
L6047+52.24	C.J.	46'-7 5/8"	9'-8"	9'-0"	4'-0 7/8"	8'-10 3/4"	9'-11 5/8"	696.99	697.00	697.13	697.04
L6047+82.24	C.J.	44'-9 1/2"	9'-7 1/4"	9'-0"	2'-0"	9'-1 5/8"	10'-0 3/8"	699.28	699.29	699.41	699.34
L6048+12.25	C.J.	42'-10"	9'-5 1/2"	8'-11 3/8"	2'-0"	7'-9 3/4"	9'-7 1/8"	701.56	701.59	701.68	701.64
L6048+42.46	C.J.	42'-4 3/8"	9'-8"	8'-6 1/2"	2'-0"	7'-0 5/8"	10'-1 1/8"	703.84	703.88	703.95	703.94
L6048+72.28	C.J.	41'-0 5/8"	9'-5 5/8"	7'-8 1/4"	2'-0"	6'-10 1/4"	10'-0 1/8"	706.12	706.18	706.23	706.24
L6048+95.00	C.J.	40'-1"	9'-7 3/8"	6'-9 5/8"*	2'-0"*	7'-0 3/4"*	9'-7 1/2"	707.89	-	-	707.87

C.J. DENOTES CONSTRUCTION JOINT
* - DIMENSIONS TO CENTER WALL ARE MEASURED FROM END OF CENTER WALL PERPENDICULAR TO BASELINE.

NOTES:

1. FOR GENERAL NOTES, SEE DRAWINGS TN100 AND TN101.
2. ALL STATIONS GIVEN ARE ALONG LEFT TRACK UNLESS OTHERWISE NOTED.
3. DIMENSIONS A AND D ARE MEASURED ALONG THE CONSTRUCTION JOINT LINE. DIMENSIONS B, C, E AND F ARE RADIAL OR PERPENDICULAR TO THEIR RESPECTIVE TRACK CENTERLINE. ELEVATIONS A, B, C AND D ARE GIVEN ALONG THE CONSTRUCTION JOINT LINE. DIMENSIONS ARE PROVIDED FOR REFERENCE ONLY. LAYOUT OF TUNNEL PER WORK POINTS ON TRACK PLAN DRAWING.
4. SEE DRAWING TN665, FOR DETAILS OF BASE SLAB PROFILE.
5. SEE DRAWING TN666, FOR CONSTRUCTION JOINT AND WATERSTOP DETAIL.
6. SEE WP DRAWINGS, FOR DETAILS OF WATERPROOFING SYSTEM.
7. SEE DRAWINGS TN800 TO TN811, FOR CONTRACTOR DESIGNED SUPPORT OF EXCAVATION REQUIREMENTS.

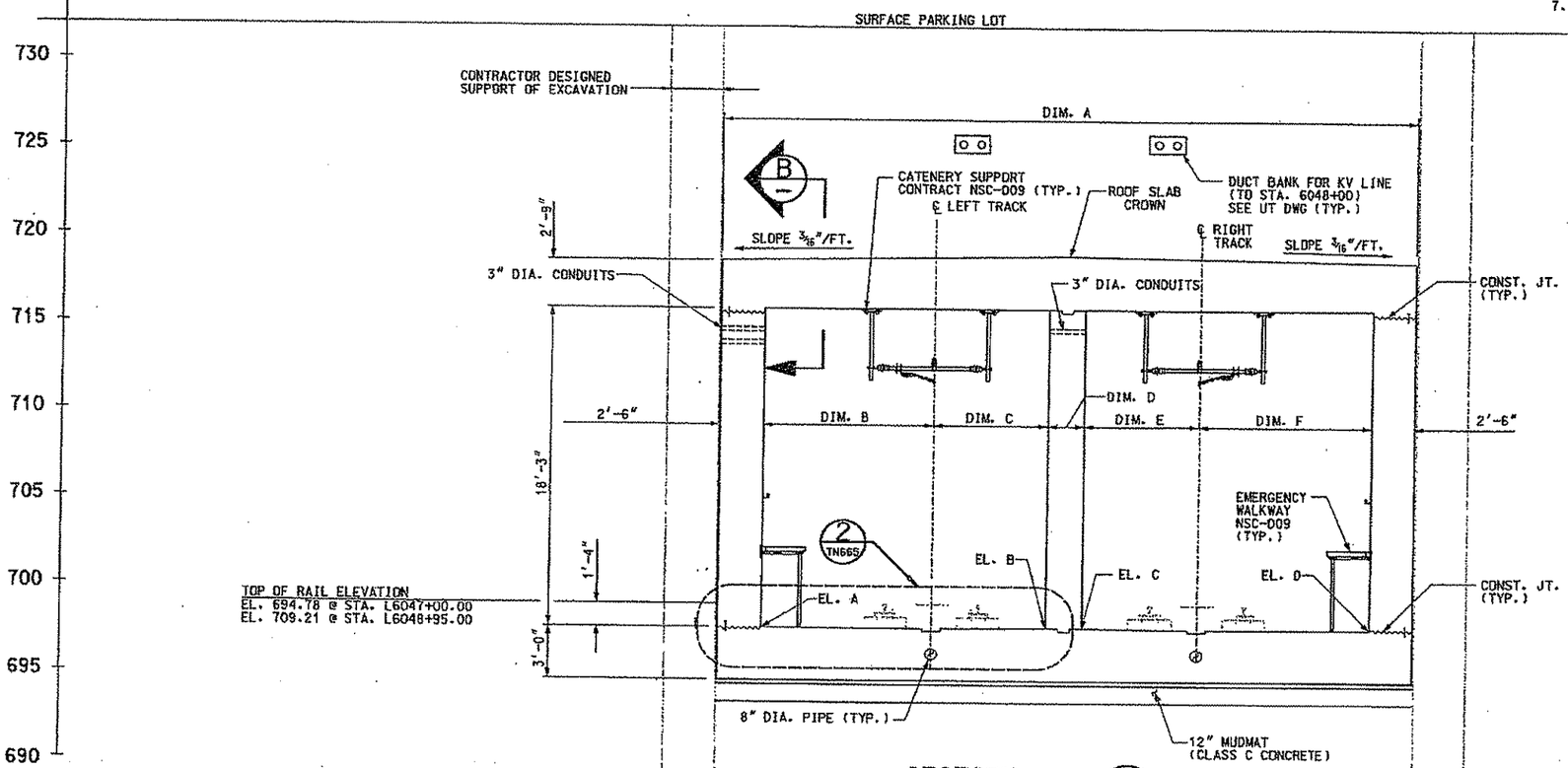

SECTION A TN614
STA. L6047+00.00 TO STA. L6048+95.00

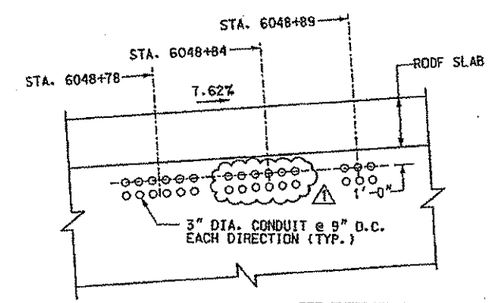

SEE EXTERIOR DUCT BANK DETAIL, DWG. TN697.

SECTION B
SEE DWG. TN634 FOR CONDUITS AT CENTER WALL

NO.	DATE	REVISIONS
6	1/27/08	REVISION 6 - ADDED CONDUITS

THE PREPARATION OF THIS DOCUMENT HAS BEEN FINANCED IN PART THROUGH A GRANT FROM THE FEDERAL TRANSIT ADMINISTRATION, U.S. DEPARTMENT OF TRANSPORTATION, UNDER THE URBAN MASS TRANSPORTATION ACT OF 1964, AS AMENDED, FOR THE PORT AUTHORITY OF ALLEGHENY COUNTY, PENNSYLVANIA.

SIGNATURE

DMJM HARRIS | AECOM
FOUR GATEWAY CENTER
20TH FLOOR
PITTSBURGH, PA. 15222

APPROVED — DATE 1/31/08

DESIGNED	RMC
DRAWN	NPD
CHECKED	ICBB
IN CHARGE	PAR
DATE	NOV. 2, 2005
SCALE	1/4"=1'-0"

PORT AUTHORITY OF ALLEGHENY COUNTY
PITTSBURGH PENNSYLVANIA

NORTH SHORE CONNECTOR
NORTH SIDE STATION AND CUT & COVER TUNNEL WEST
TUNNEL CROSS SECTION GEOMETRY
STA. L6047+00.00 TO STA. L6048+95.00

PORT AUTHORITY

CONTRACT NO. NSC-006
DWG. NO. TN657-1 SHT. 51-1

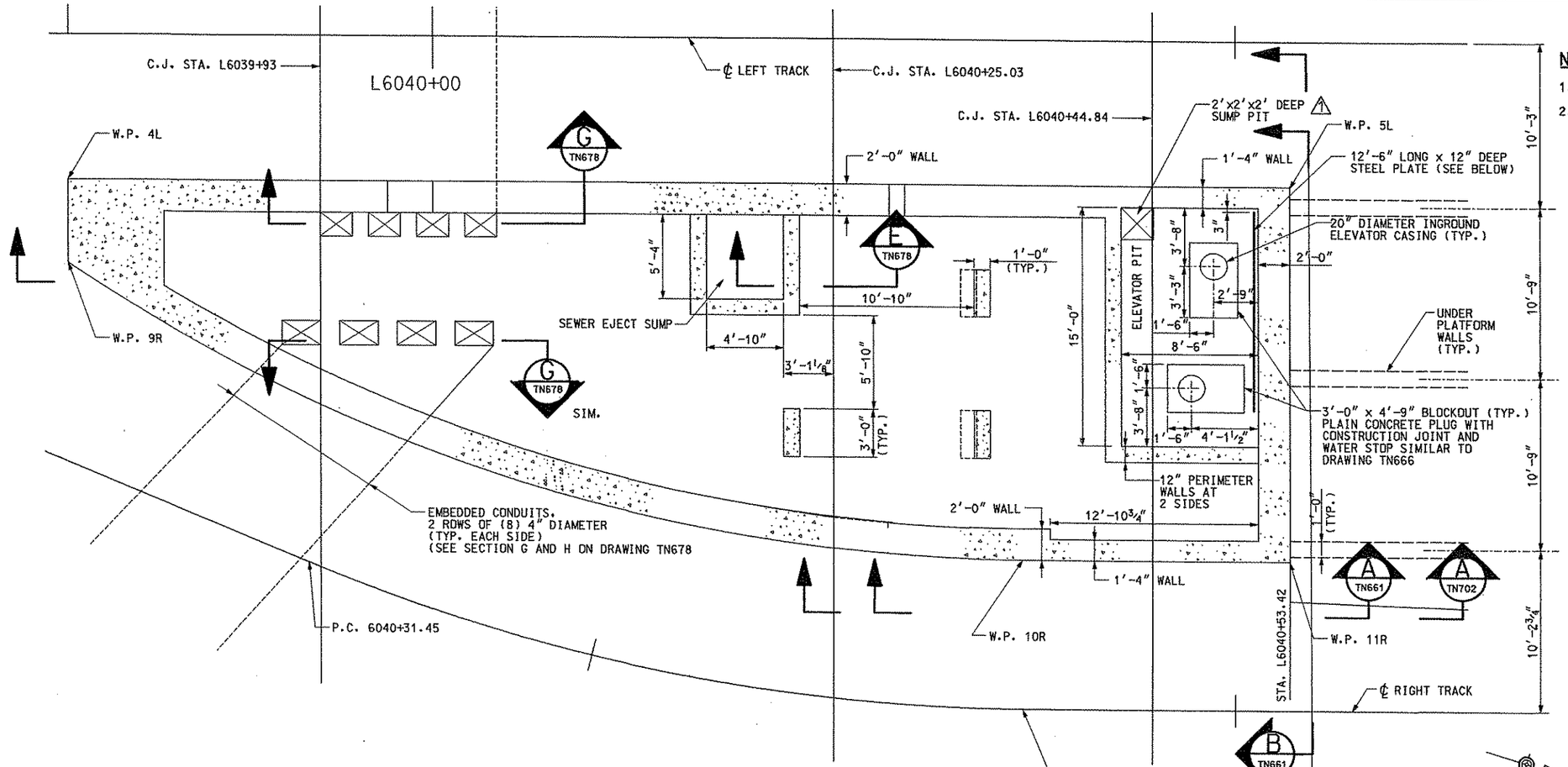

BASE SLAB PLAN AT EAST ANCILLARY AREA (1 / TN610)

NOTES:

1. FOR GENERAL NOTES, SEE DRAWINGS TN100 AND TN101.
2. SEE DRAWING TN610 FOR TABLE OF WORKPOINTS AND WALL GEOMETRY.

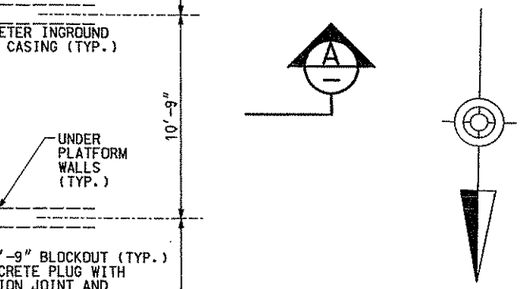

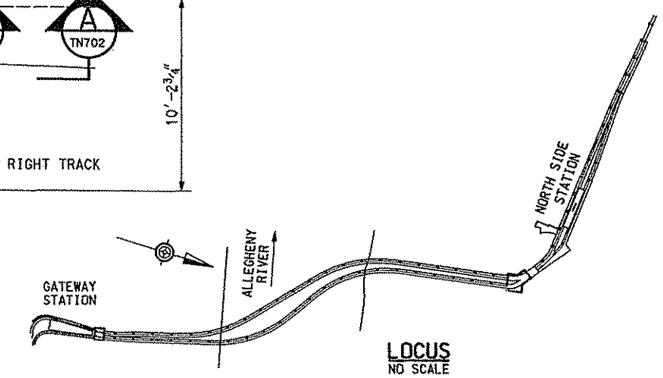

LOCUS
NO SCALE

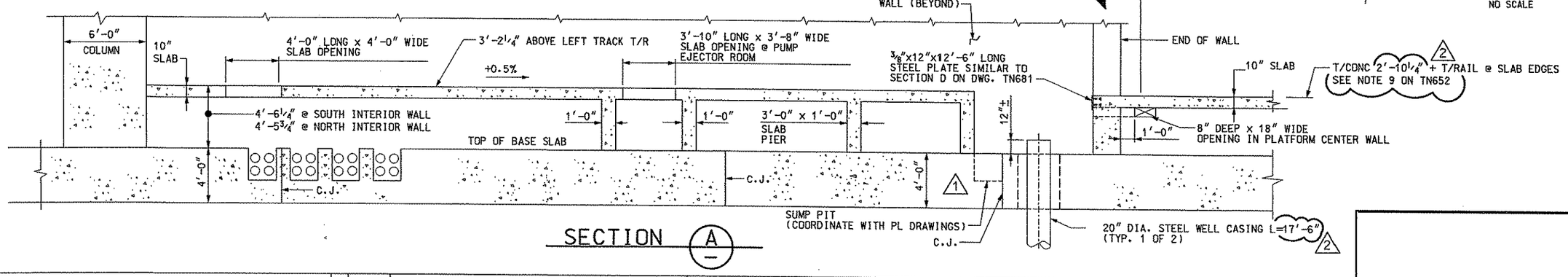

SECTION (A / —)

NO.	DATE	DESCRIPTION
2	5/09/08	REVISION 8 - MOD PLATFORFM HEIGHT & CASING LENGTH
1	1/27/08	REVISION 6 - REVISED SUMP

REVISIONS

THE PREPARATION OF THIS DOCUMENT HAS BEEN FINANCED IN PART THROUGH A GRANT FROM THE FEDERAL TRANSIT ADMINISTRATION, U.S. DEPARTMENT OF TRANSPORTATION, UNDER THE URBAN MASS TRANSPORTATION ACT OF 1964, AS AMENDED, FOR THE PORT AUTHORITY OF ALLEGHENY COUNTY, PENNSYLVANIA.

COMMONWEALTH OF PENNSYLVANIA REGISTERED PROFESSIONAL PETER DENNIS MAURITZ ENGINEER NO. 059763

SIGNATURE

DMJM HARRIS | AECOM
FOUR GATEWAY CENTER
20TH FLOOR
PITTSBURGH, PA. 15222

APPROVED — DATE 5/27/08

DESIGNED	RMG
DRAWN	DC
CHECKED	PDM
IN CHARGE	PAR
DATE	NOV. 2, 2005
SCALE	1/4"=1'-0"

4' 2' 0 4'

PORT AUTHORITY OF ALLEGHENY COUNTY
PITTSBURGH PENNSYLVANIA

NORTH SHORE CONNECTOR
NORTH SIDE STATION AND CUT & COVER TUNNEL WEST
PLAN AND SECTION
AT EAST ANCILLARY AREA

PORT AUTHORITY

CONTRACT NO. NSC-006
DWG. NO. TN658-2 SHT. 92-2

$DATE$ $TIME$
$FILE$

NOTES:

1. FOR GENERAL NOTES, SEE DRAWINGS TN100 AND TN101.
2. ALL STATIONS GIVEN ARE ALONG LEFT TRACK UNLESS OTHERWISE NOTED.
3. ALL DIMENSIONS ARE PERPENDICULAR OR RADIAL TO CORRESPONDING TRACK UNLESS OTHERWISE NOTED.
4. SEE DRAWING TN665, FOR DETAILS OF BASE SLAB PROFILE.
5. SEE DRAWING TN666, FOR CONSTRUCTION JOINT AND WATERSTOP DETAIL.
6. SEE WP DRAWINGS, FOR DETAILS OF WATERPROOFING SYSTEM.
7. SEE DRAWING TN805, FOR SUPPORT OF EXCAVATION AT SLURRY WALLS.

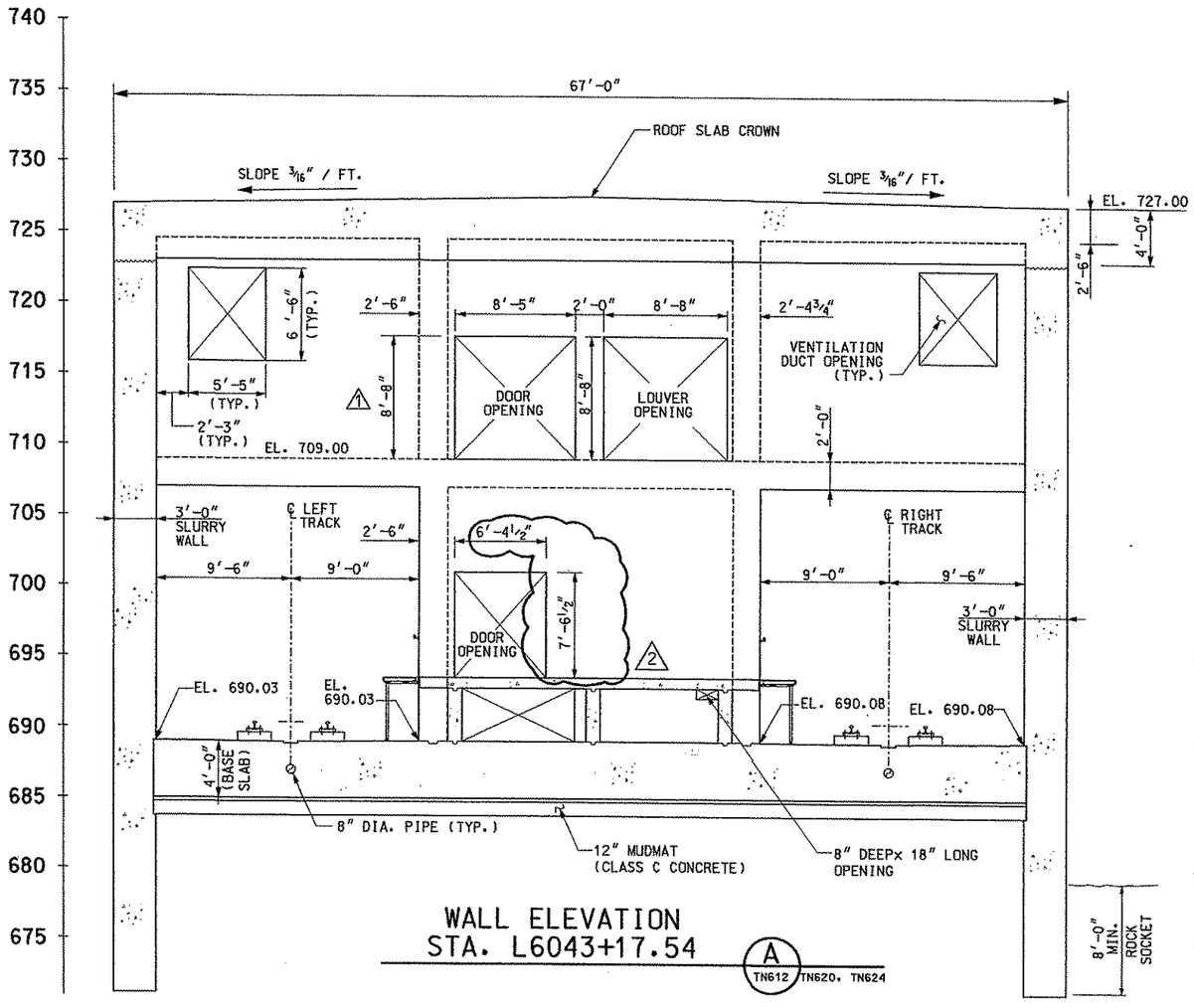

WALL ELEVATION
STA. L6043+17.54

A
TN612 TN620, TN624

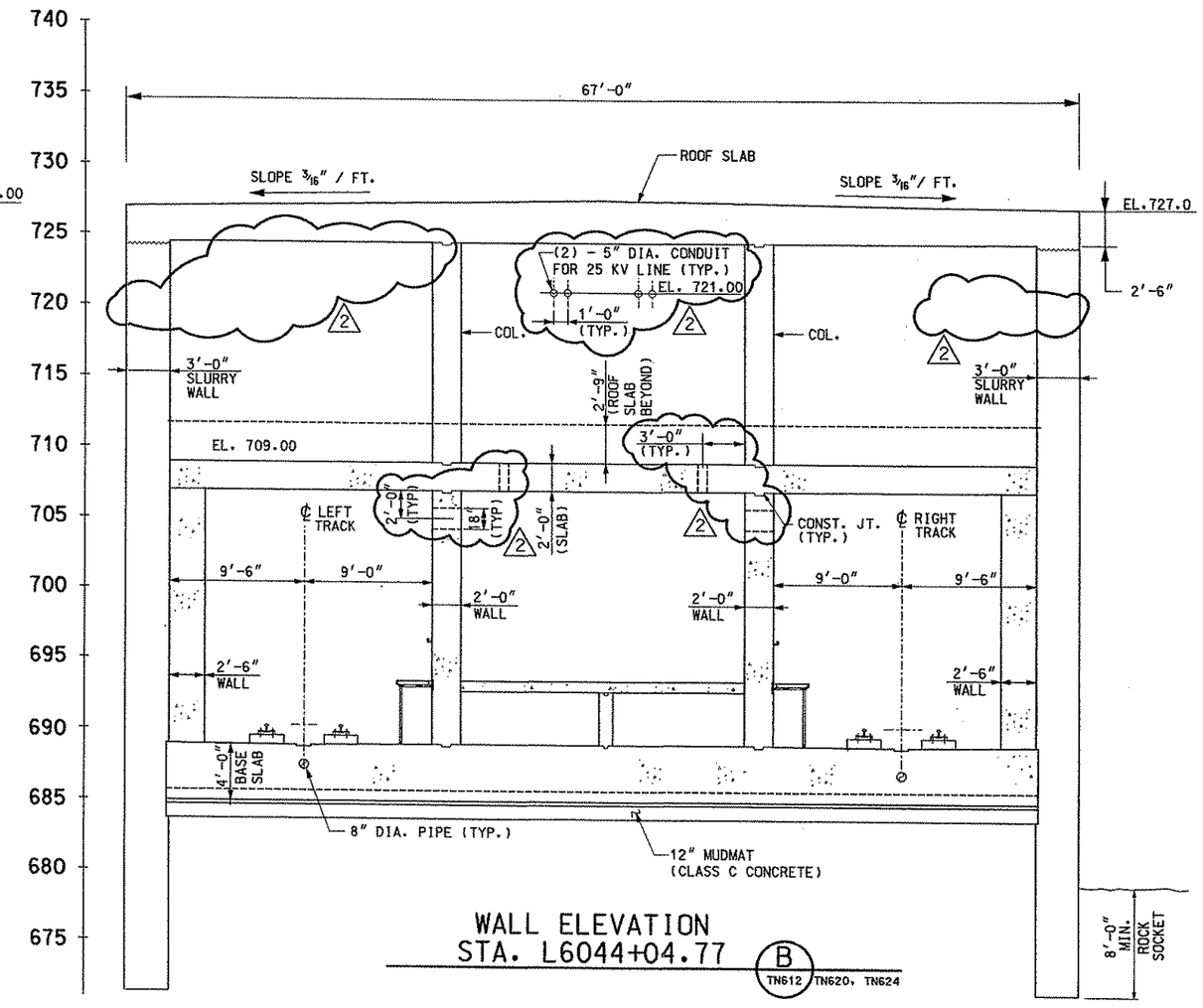

WALL ELEVATION
STA. L6044+04.77

B
TN612 TN620, TN624

NO.	DATE	DESCRIPTION
2	5/09/08	REVISION 8- MODIFIED DOOR SIZE & CONDUIT OPENINGS
1	1/27/08	REVISION 6- REVISED DOOR OPENING HEIGHT

REVISIONS

THE PREPARATION OF THIS DOCUMENT HAS BEEN FINANCED IN PART THROUGH A GRANT FROM THE FEDERAL TRANSIT ADMINISTRATION, U.S. DEPARTMENT OF TRANSPORTATION, UNDER THE URBAN MASS TRANSPORTATION ACT OF 1964, AS AMENDED, FOR THE PORT AUTHORITY OF ALLEGHENY COUNTY, PENNSYLVANIA.

COMMONWEALTH OF PENNSYLVANIA REGISTERED PROFESSIONAL ENGINEER PETER DENNIS MAURITZ

SIGNATURE

DMJM HARRIS | AECOM
FOUR GATEWAY CENTER
20TH FLOOR
PITTSBURGH, PA. 15222

APPROVED

5/27/08
DATE

DESIGNED	KV
DRAWN	NPD
CHECKED	PDM
IN CHARGE	PAR
DATE	NOV. 2, 2005
SCALE	3/16"=1'-0" (4' 2' 0 4')

PORT AUTHORITY OF ALLEGHENY COUNTY
PITTSBURGH PENNSYLVANIA

NORTH SHORE CONNECTOR
NORTH SIDE STATION AND CUT & COVER TUNNEL WEST
WEST ANCILLARY AREA WALL ELEVATIONS

PORT AUTHORITY

CONTRACT NO.	NSC-006		
DWG. NO.	TN659-2	SHT.	93-2

$TIME$
$DATE$
$FILE$

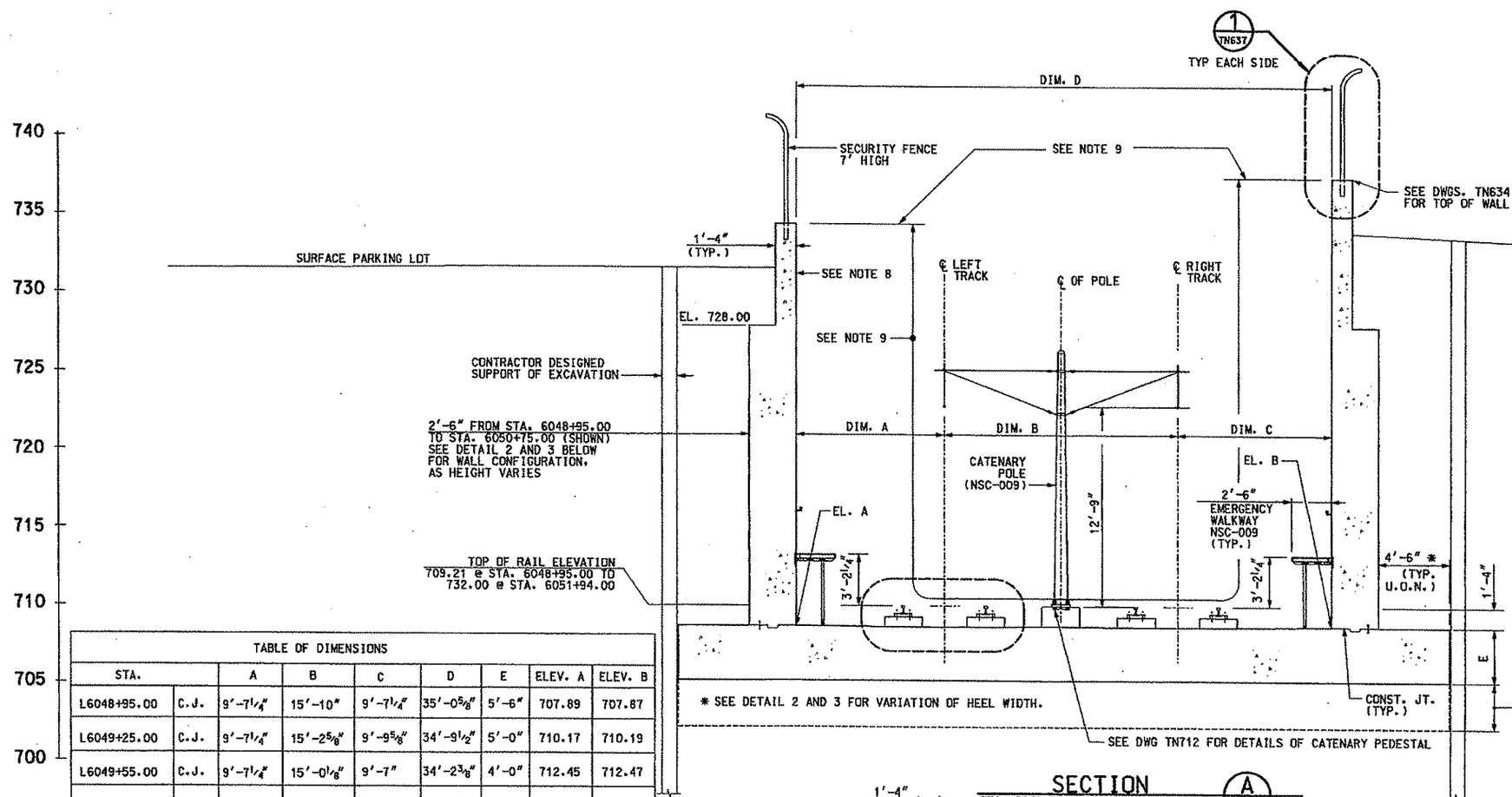

SECTION A TN615

STA. 6048+95.00 TO STA. 6051+94.00 (LOOKING UPSTATION)

TABLE OF DIMENSIONS								
STA.		A	B	C	D	E	ELEV. A	ELEV. B
L6048+95.00	C.J.	9'-7¼"	15'-10"	9'-7¼"	35'-0⅝"	5'-6"	707.89	707.87
L6049+25.00	C.J.	9'-7¼"	15'-2⅝"	9'-9⅝"	34'-9½"	5'-0"	710.17	710.19
L6049+55.00	C.J.	9'-7¼"	15'-0⅛"	9'-7"	34'-2⅜"	4'-0"	712.45	712.47
L6049+85.00	C.J.	9'-7¼"	15'-0"	9'-7¼"	34'-2⅜"	3'-6"	714.74	714.76
L6050+15.00	C.J.	9'-7¼"	15'-0"	9'-7¼"	34'-2⅜"	3'-0"	717.03	717.04
L6050+45.00	C.J.	9'-7¼"	15'-0"	9'-7¼"	34'-2⅜"	2'-6"	719.32	719.33
L6050+75.00	C.J.	9'-7¼"	15'-0"	9'-7¼"	34'-2⅜"	2'-6"	721.60	721.61
L6051+05.00	C.J.	9'-10½"	15'-0"	9'-6½"	34'-5"	2'-6"	723.89	723.90
L6051+35.00	C.J.	10'-0⅝"	15'-0"	9'-8"	34'-8¾"	2'-0"	726.17	726.18
L6051+65.00	C.J.	9'-11⅝"	15'-0"	9'-6"	34'-5⅝"	2'-0"	728.47	728.47
L6051+94.00	C.J.	9'-7¾"	15'-0"	9'-7"	34'-2¾"	2'-0"	730.68	730.68

* DIMENSION IS PERPENDICULAR TO LEFT TRACK

C.J. DENOTES CONSTRUCTION JOINT

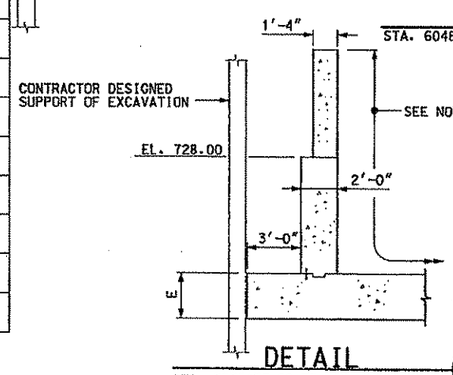

DETAIL 2

STA. 6050+75.00 TO STA. 6051+35.00 (LOOKING UPSTATION)

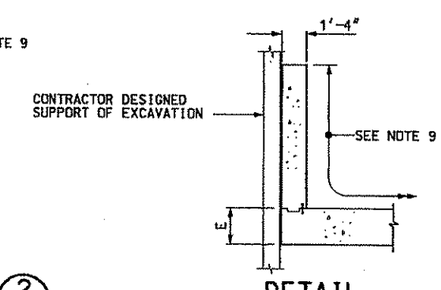

DETAIL 3

STA. 6051+35.00 TO STA. 6051+94.00 (LOOKING UPSTATION)

NOTES:

1. FOR GENERAL NOTES, SEE DRAWINGS TN100 AND TN101.
2. ALL STATIONS GIVEN ARE ALONG LEFT TRACK UNLESS OTHERWISE NOTED.
3. DIMENSIONS D AND B ARE MEASURED ALONG THE CONSTRUCTION JOINT LINE. DIMENSIONS A AND C ARE RADIAL OR PERPENDICULAR TO THEIR RESPECTIVE TRACK CENTERLINES. ELEVATIONS A AND B ARE GIVEN ALONG THE CONSTRUCTION JOINT LINE.
4. SEE DRAWING TN665, FOR DETAILS OF BASE SLAB PROFILE.
5. SEE DRAWING TN666, FOR CONSTRUCTION JOINT AND WATERSTOP DETAIL.
6. SEE WP DRAWINGS, FOR DETAILS OF WATERPROOFING SYSTEM.
7. SEE DRAWINGS TN800 TO TN811, FOR CONTRACTOR DESIGNED SUPPORT OF EXCAVATION REQUIREMENTS.
8. SEE DRAWINGS TN635 – TN638 FOR TREATMENT AT INTERIOR AND EXTERIOR WALL FACES.
9. INSIDE SURFACE OF BOAT WALLS AND BASE SLAB TO RECIEVE COATING OF PENETRATING SEALER.
10. SEE DRAWING TN703 FOR DETAILS OF SUMP CHAMBER AND TRENCH DRAIN BETWEEN STA. L6048+98.50 AND L6049+05.00. 1

NO.	DATE	DESCRIPTION
1	12/09/05	ADDENDUM 2 – DRAWING MODIFIED

REVISIONS

THE PREPARATION OF THIS DOCUMENT HAS BEEN FINANCED IN PART THROUGH A GRANT FROM THE FEDERAL TRANSIT ADMINISTRATION, U.S. DEPARTMENT OF TRANSPORTATION, UNDER THE URBAN MASS TRANSPORTATION ACT OF 1964, AS AMENDED, FOR THE PORT AUTHORITY OF ALLEGHENY COUNTY, PENNSYLVANIA.

COMMONWEALTH OF PENNSYLVANIA REGISTERED PROFESSIONAL ENGINEER PETER DENNIS MAURITZ PE071163

SIGNATURE

DMJM HARRIS | AECOM
FOUR GATEWAY CENTER
20TH FLOOR
PITTSBURGH, PA. 15222

APPROVED 11-2-05 DATE

DESIGNED	KM
DRAWN	NPD
CHECKED	CBB
IN CHARGE	PAR
DATE	NOV. 2. 2005
SCALE	1/4"=1'-0" (4' 2' 0 4')

PORT AUTHORITY OF ALLEGHENY COUNTY
PITTSBURGH PENNSYLVANIA

NORTH SHORE CONNECTOR
NORTH SIDE STATION AND CUT & COVER TUNNEL WEST
BOAT CROSS SECTION GEOMETRY
STA. L6048+95.00 TO STA. L6051+94.00

PORT AUTHORITY

CONTRACT NO. NSC-006
DWG. NO. TN680 SH. 94

12/7/2005 6:01:28 PM
m:\NSF\Final\GRT\NS C&C\06tn660.dgn

NOTES:

1. FOR GENERAL NOTES, SEE DRAWINGS TN100 AND TN101.
2. PROTECT OPENINGS WITH METAL PLATE DECKING OR EQUIVILENT PROTECTIVE SURFACE COVER.
3. OPENING FOR ELEVATOR DOOR HAS BEEN SIZED WITH 8" ADDITIONAL HORIZONTAL CLEARENCE BEYOND ACTURAL OUTSIDE EDGE OF DOOR OPENING.

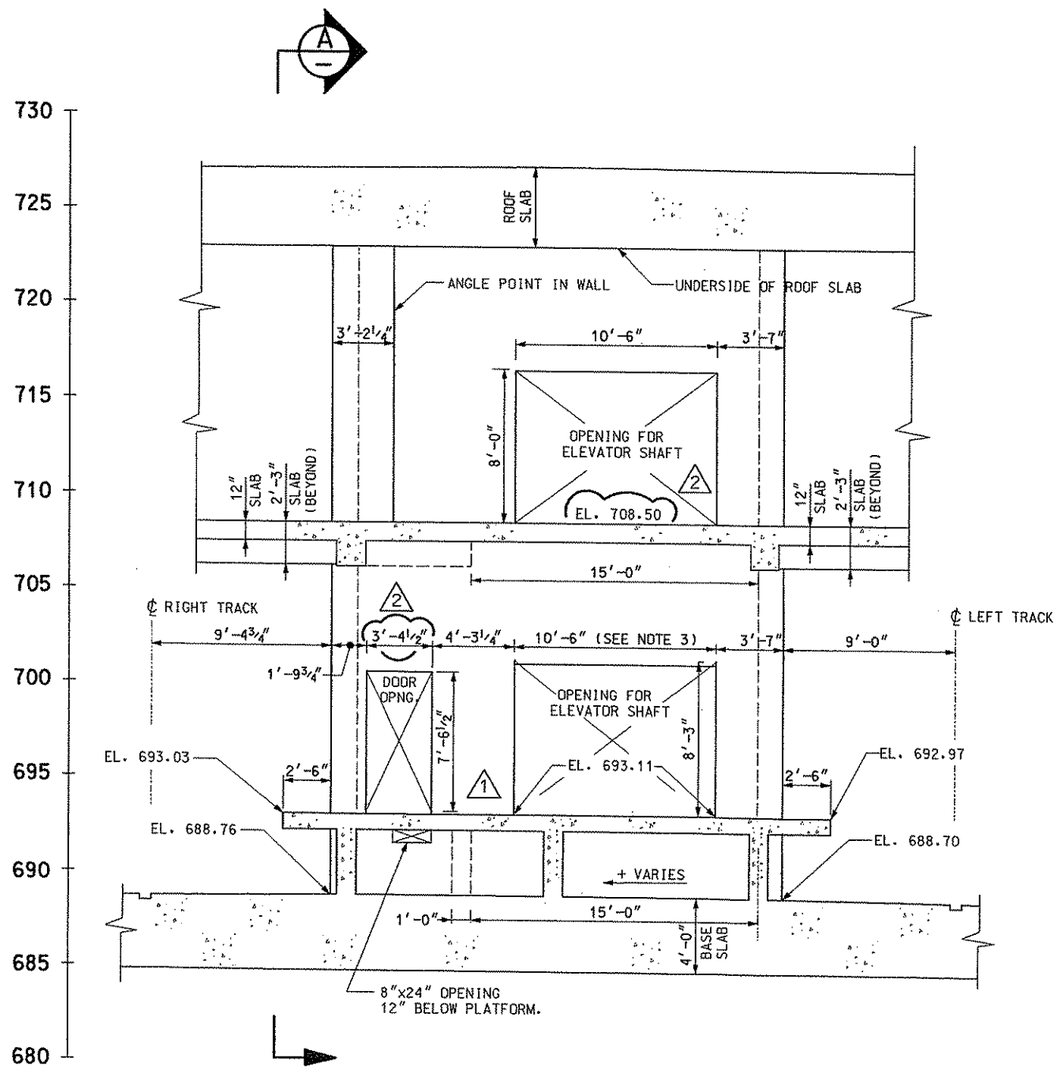

WALL ELEVATION
STA. L6040+53.42 (B) TN658

SCALE: 1/4"=1'-0"
4' 2' 0 4'

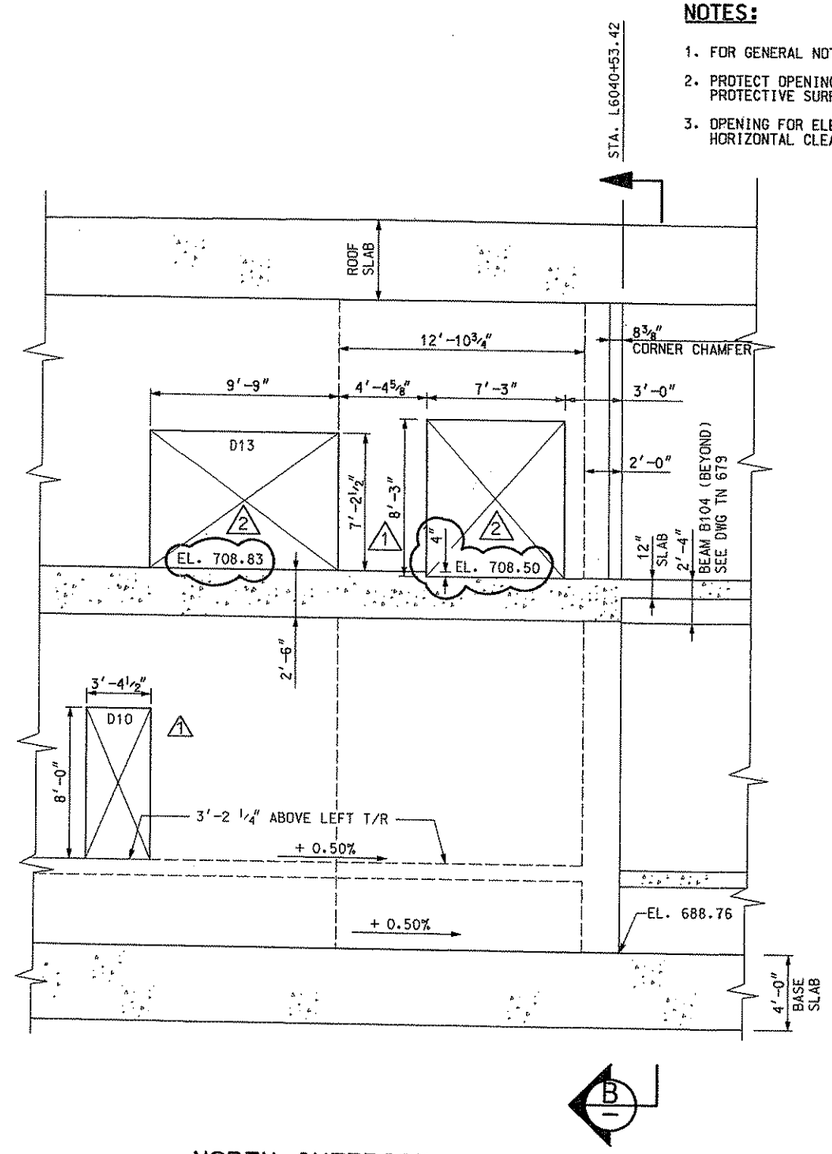

NORTH INTERIOR
ELEVATION WALL (A) TN658

SCALE: 1/4"=1'-0"
4' 2' 0 4'

NO.	DATE	DESCRIPTION
2	5/09/08	REVISION 8 - MODIFIED DOOR SIZE & MEZZ ELEVATION
1	1/27/08	REVISION 6 - REVISED DOOR OPENINGS

REVISIONS

THE PREPARATION OF THIS DOCUMENT HAS BEEN FINANCED IN PART THROUGH A GRANT FROM THE FEDERAL TRANSIT ADMINISTRATION, U.S. DEPARTMENT OF TRANSPORTATION, UNDER THE URBAN MASS TRANSPORTATION ACT OF 1964, AS AMENDED, FOR THE PORT AUTHORITY OF ALLEGHENY COUNTY, PENNSYLVANIA.

COMMONWEALTH OF PENNSYLVANIA REGISTERED PROFESSIONAL ENGINEER PETER DENNIS MAURITZ

SIGNATURE

DMJM HARRIS | AECOM
FOUR GATEWAY CENTER
20TH FLOOR
PITTSBURGH, PA. 15222

APPROVED — DATE 5/27/08

DESIGNED	RHG
DRAWN	NPD
CHECKED	PDM
IN CHARGE	PAR
DATE	NOV. 2, 2005
SCALE	AS SHOWN

PORT AUTHORITY OF ALLEGHENY COUNTY
PITTSBURGH PENNSYLVANIA

NORTH SHORE CONNECTOR
NORTH SIDE STATION AND CUT & COVER TUNNEL WEST
EAST ANCILLARY AREA
WALL ELEVATION

PORT AUTHORITY

CONTRACT NO. NSC-006
DWG. NO. TN661-2 SHT. 95-2

$DATE$ $TIME$
$FILE$

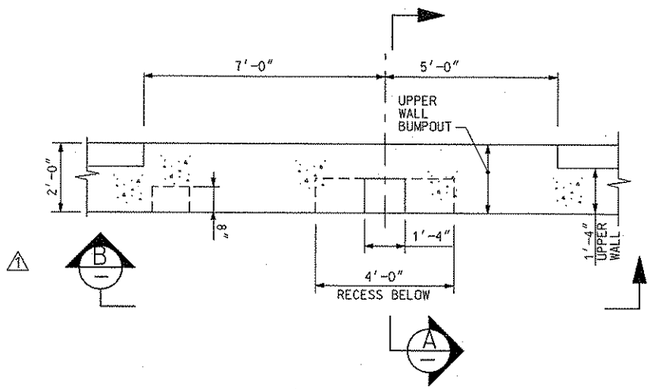

DETAIL 3 TN616
STANDPIPE BLOCKOUT
@ STA. L6051+20
SCALE: 1/2"=1'-0"

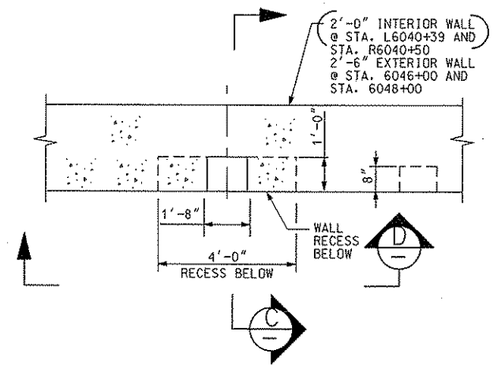

DETAIL 2 TN610 TN613, TN614
STANDPIPE BLOCKOUT
(@ STA. L6040+39, STA. R6040+50
STA. 6046+00 & STA. 6048+00)
SCALE: 1/2"=1'-0"

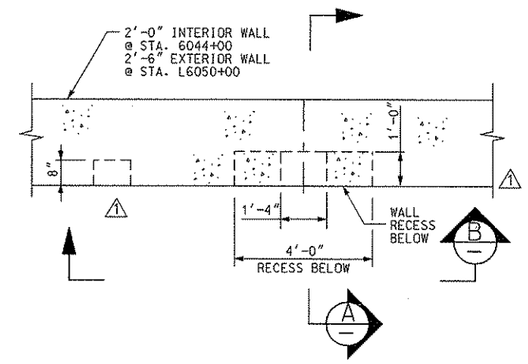

DETAIL 1 TN612 TN615
STANDPIPE BLOCKOUT
@ STA.6044+00 & STA. L6050+00
SCALE: 1/2"=1'-0"

NOTES:

1. SEE DRAWINGS TN100 AND TN101 FOR GENERAL NOTES.
2. SEE DRAWING TN695 FOR REINFORCEMENT REQUIREMENTS AT WALL RECESSES.
3. SEE CONTRACT NSC-009 FOR DRY STANDPIPE REQUIREMENTS.

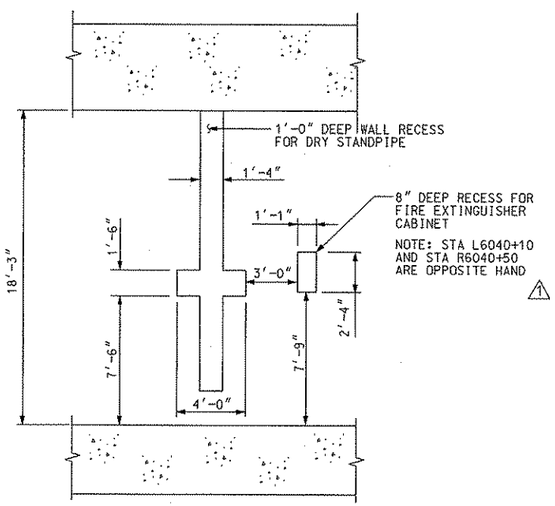

SECTION D
SCALE: 1/4"=1'-0"

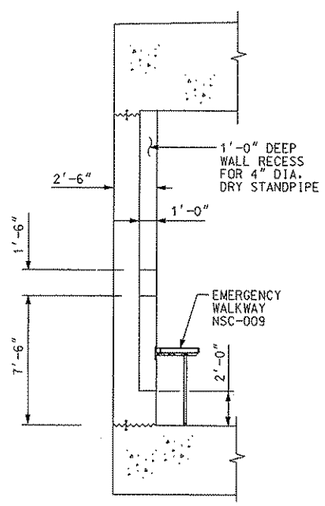

SECTION C
SCALE: 1/4"=1'-0"

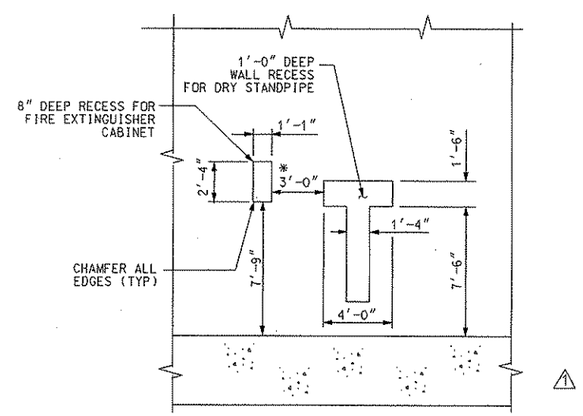

* 3'-8 1/2" @ L6050+00 AND L6051+20

SECTION B
SCALE: 1/4"=1'-0"

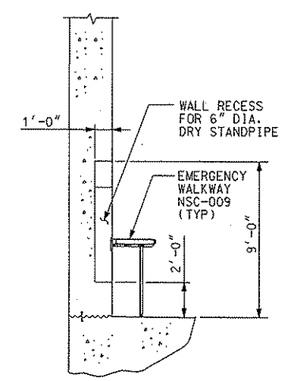

SECTION A
SCALE: 1/4"=1'-0"

NO.	DATE	DESCRIPTION
2	6/22/08	REVISION 9- MODIFIED DSP STATION
1	5/09/08	REVISION 8- MODIFIED DSP ORIENTATION & DEL NOTE 4

REVISIONS

THE PREPARATION OF THIS DOCUMENT HAS BEEN FINANCED IN PART THROUGH A GRANT FROM THE FEDERAL TRANSIT ADMINISTRATION, U.S. DEPARTMENT OF TRANSPORTATION, UNDER THE URBAN MASS TRANSPORTATION ACT OF 1964, AS AMENDED, FOR THE PORT AUTHORITY OF ALLEGHENY COUNTY, PENNSYLVANIA.

COMMONWEALTH OF PENNSYLVANIA REGISTERED PROFESSIONAL ENGINEER PETER DENNIS MAURITZ
SIGNATURE

DMJM HARRIS | AECOM
FOUR GATEWAY CENTER
20TH FLOOR
PITTSBURGH, PA. 15222
APPROVED
6/25/08
DATE

DESIGNED	CBB
DRAWN	NPD
CHECKED	PDM
IN CHARGE	PAR
DATE	NOV. 2, 2005
SCALE	AS SHOWN

PORT AUTHORITY OF ALLEGHENY COUNTY
PITTSBURGH PENNSYLVANIA

NORTH SHORE CONNECTOR
NORTH SIDE STATION AND CUT & COVER TUNNEL WEST
DRY STANDPIPE NICHE DETAILS

PORT AUTHORITY

CONTRACT NO. NSC-006
DWG. NO. TN669-2
SHT. 103-2

$DATE$ $TIME$
$FILE$

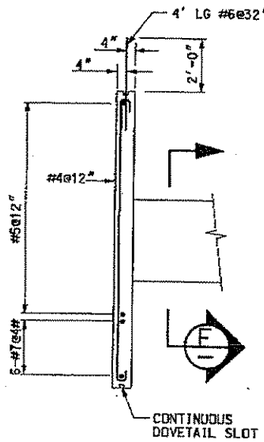

WALL @ STA. L6039+82.6 SIMILAR W/O THE 7 BARS

ENDS OF THE WALL PLACED MONOLITHIC WITH THE EAST AND WEST WALLS

SECTION E — CENTER

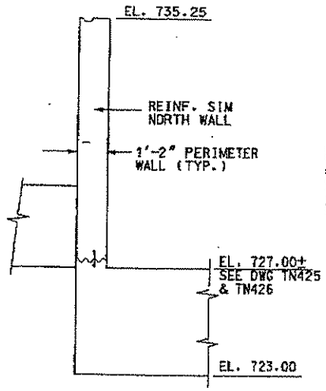

SECTION D — SOUTH

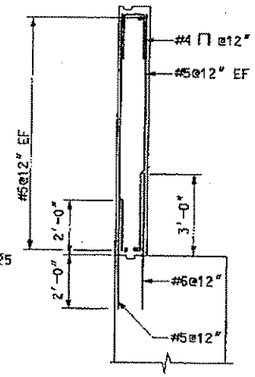

SECTION C — NORTH

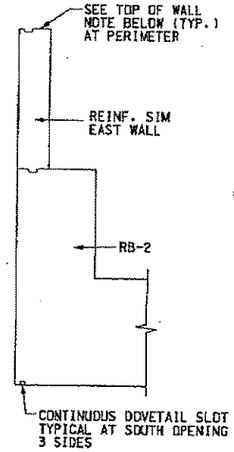

SECTION B — WEST

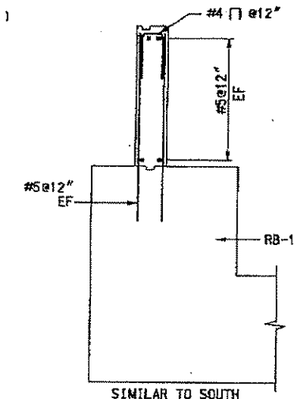

SECTION A — EAST

STAIRS/AREAWAY WALLS

SCALE 3/8"=1'-0"

TOP OF PERIMETER WALL FINISH:

NSC-006 CONTRACTOR TO COORDINATE INSTALLATION OF DOWEL SYSTEM FOR PRECAST WALL PANELS WITH NSC-011 CONTRACTOR. NSC-011 CONTRACTOR TO PROVIDE TYP. FOR PERIMETER

NOTES:

1. SEE NOTES ON DRAWING TN673.

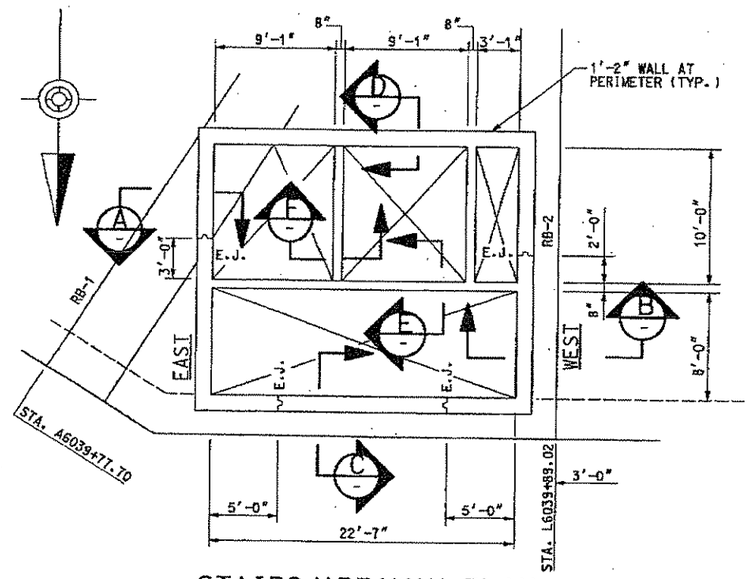

STAIRS/AREAWAY PLAN

3/16"=1'-0"

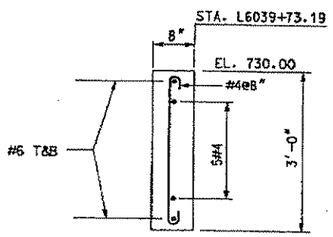

SECTION F

3/4"=1'-0"

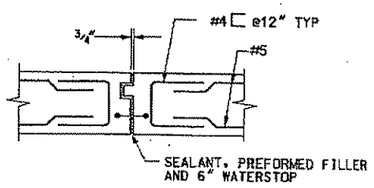

E.J. FROM TOP OF SLAB OR TOP OF BEAM TO EL. 733.00

WALL EXPANSION JOINT

3/4"=1'-0"

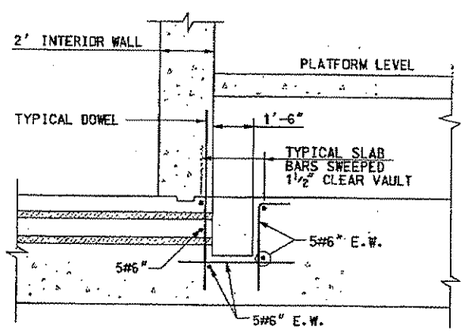

LOCATIONS:
STA. L6043+97
STA. R6043+97
STA. A6039+92
STA. L6039+98

SECTION H — ELECTRIC VAULT

SCALE 3/8"=1'-0"

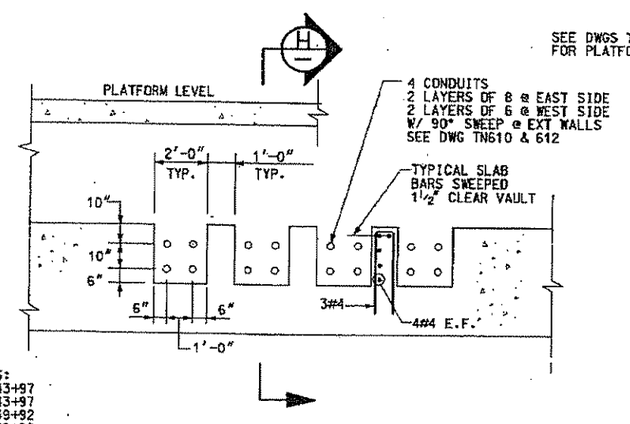

SECTION G — ELECTRIC VAULT (TN658)

SCALE 3/8"=1'-0"

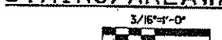

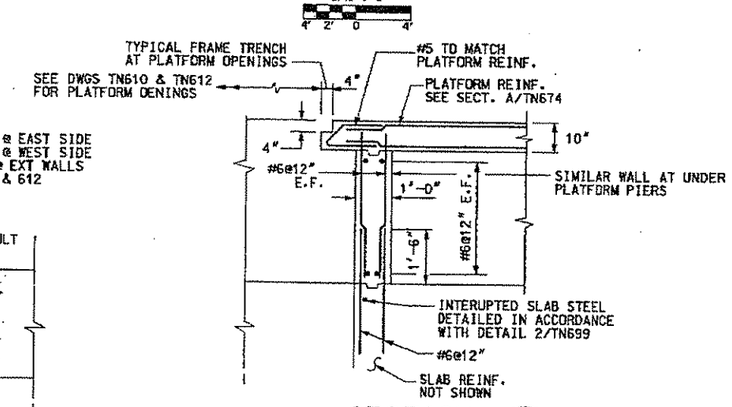

SECTION E (TN658) — SEWER EJECTOR PIT @ STA. L6040+20

1/2"=1'-0"

NO.	DATE	DESCRIPTION

REVISIONS

THE PREPARATION OF THIS DOCUMENT HAS BEEN FINANCED IN PART THROUGH A GRANT FROM THE FEDERAL TRANSIT ADMINISTRATION, U.S. DEPARTMENT OF TRANSPORTATION, UNDER THE URBAN MASS TRANSPORTATION ACT OF 1964, AS AMENDED, FOR THE PORT AUTHORITY OF ALLEGHENY COUNTY, PENNSYLVANIA.

COMMONWEALTH OF PENNSYLVANIA — REGISTERED PROFESSIONAL ENGINEER — PETER DENNIS MAURITZ — PE071563

SIGNATURE

DMJM HARRIS | AECOM
FOUR GATEWAY CENTER
20TH FLOOR
PITTSBURGH, PA. 15222

APPROVED — 11-2-05 DATE

DESIGNED	RHG
DRAWN	NPD
CHECKED	WBT
IN CHARGE	PAR
DATE	NOV. 2, 2005
SCALE	AS SHOWN

PORT AUTHORITY OF ALLEGHENY COUNTY
PITTSBURGH PENNSYLVANIA

NORTH SHORE CONNECTOR
NORTH SIDE STATION AND CUT & COVER TUNNEL WEST
REINFORCING SECTIONS – STA. L6039+56 TO STA. L6040+53.42
SHEET 6 OF 6

PORT AUTHORITY

CONTRACT NO. NSC-006
DWG. NO. TN678 SHT. 112

10/26/2005 5:09:33 PM
n:\nsf\final\gw\ne cab\06tn678.dgn

NOTES:

1. FOR GENERAL NOTES, SEE DRAWINGS TN100 AND TN101.
2. ALL STATIONS GIVEN ARE ALONG LEFT TRACK UNLESS OTHERWISE NOTED.
3. SEE DRAWING TN665, FOR DETAILS OF BASE SLAB PROFILE.
4. SEE DRAWING TN666, FOR CONSTRUCTION JOINT AND WATERSTOP DETAIL.
5. SEE WP DRAWINGS, FOR DETAILS OF WATERPROOFING SYSTEM.
6. SEE DRAWINGS TN800 TO TN811, FOR CONTRACTOR DESIGNED SUPPORT OF EXCAVATION REQUIREMENTS.
7. SEE DRAWING TN698 FOR ADDITIONAL REINFORCEMENT.

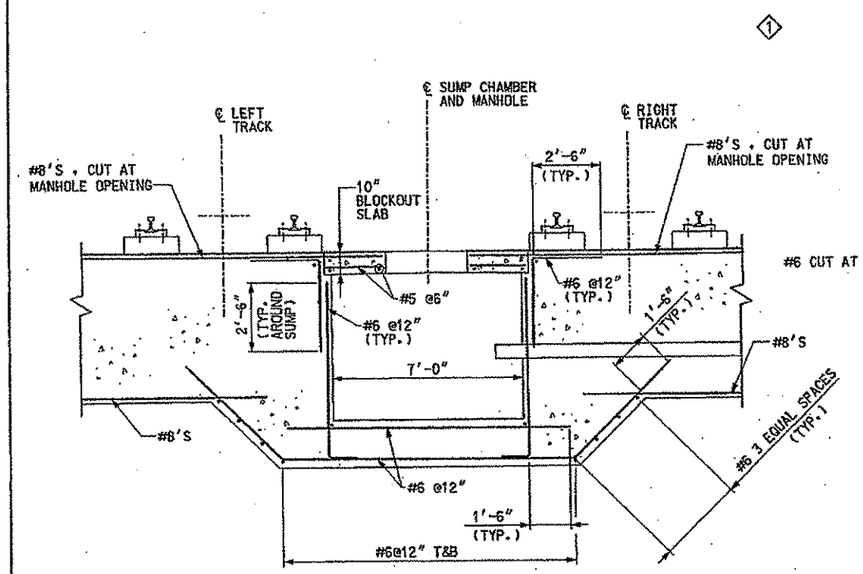

REINFORCING THRU SUMP CHAMBER SECTION (C)

SCALE: 3/8"=1'-0"

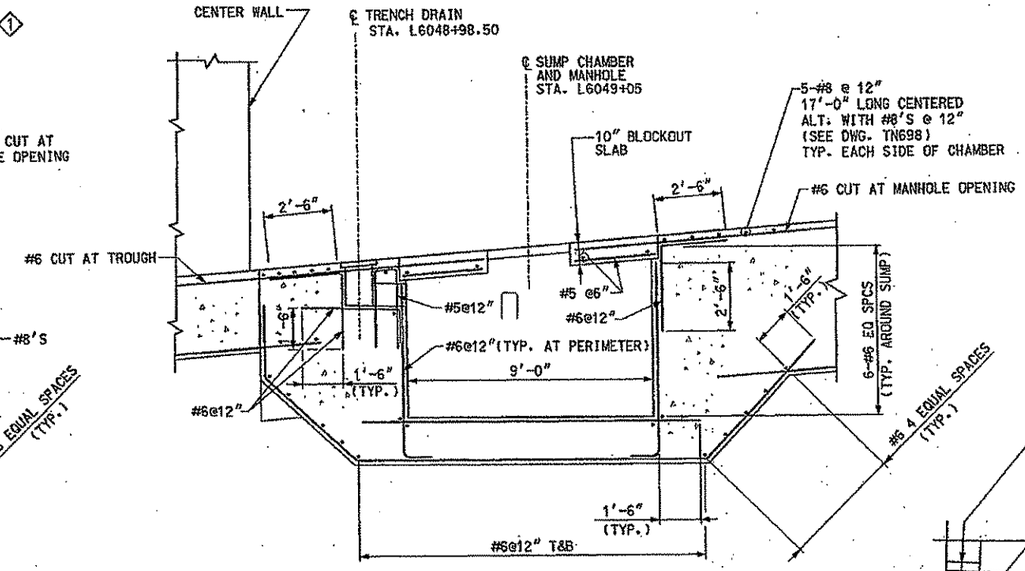

REINFORCING THRU SUMP CHAMBER SECTION (A)

SCALE: 3/8"=1'-0"

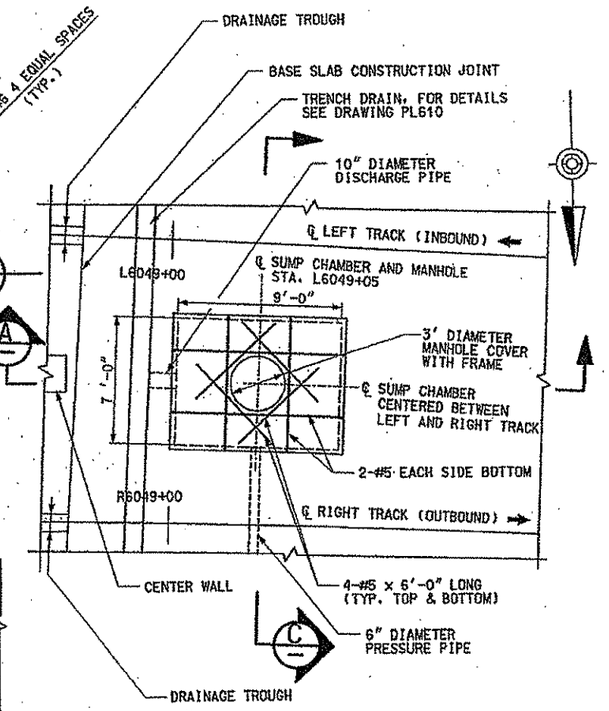

SUMP CHAMBER REINFORCING PARTIAL PLAN LAYOUT

SCALE: 1/4"=1'-0"

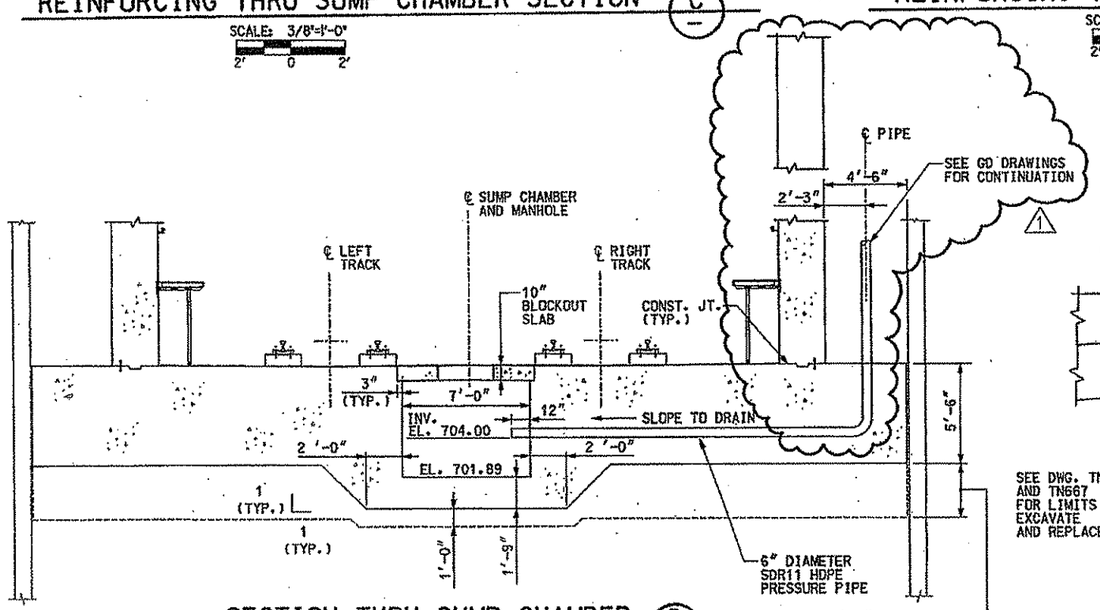

SECTION THRU SUMP CHAMBER (D) TN615

(LOOKING UPSTATION)

SCALE: 1/4"=1'-0"

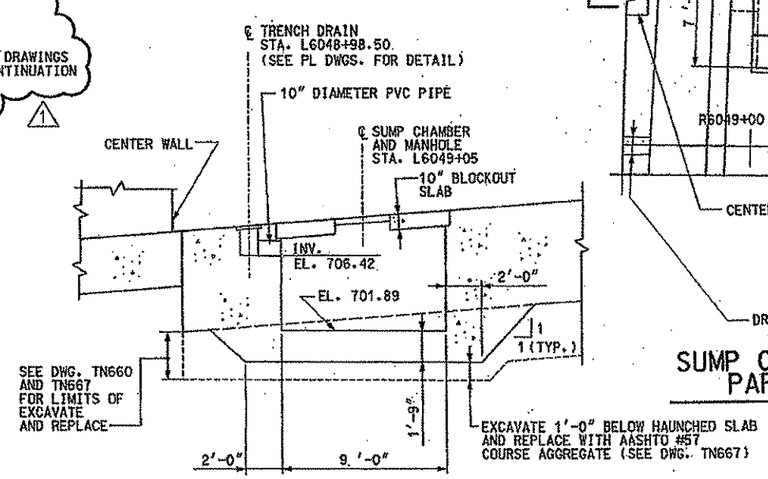

SECTION THRU SUMP CHAMBER (B) TN615

SCALE: 1/4"=1'-0"

NO.	DATE	DESCRIPTION
3	07/03/07	REVISION 3 - RELOCATED PIPE
2	12/09/05	ADDENDUM 2 - NEW DRAWING

REVISIONS

THE PREPARATION OF THIS DOCUMENT HAS BEEN FINANCED IN PART THROUGH A GRANT FROM THE FEDERAL TRANSIT ADMINISTRATION, U.S. DEPARTMENT OF TRANSPORTATION, UNDER THE URBAN MASS TRANSPORTATION ACT OF 1964, AS AMENDED, FOR THE PORT AUTHORITY OF ALLEGHENY COUNTY, PENNSYLVANIA.

REGISTERED PROFESSIONAL ENGINEER DENNIS BEAUDET PENNSYLVANIA PE047183

SIGNATURE

DMJM HARRIS | AECOM
FOUR GATEWAY CENTER
20TH FLOOR
PITTSBURGH, PA. 15222

APPROVED — DATE 7/2/09

DESIGNED	KM
DRAWN	DXC
CHECKED	CBB
IN CHARGE	PAR
DATE	DEC. 9, 2005
SCALE	AS SHOWN

PORT AUTHORITY OF ALLEGHENY COUNTY
PITTSBURGH PENNSYLVANIA

NORTH SHORE CONNECTOR
NORTH SIDE STATION AND CUT & COVER TUNNEL WEST
SUMP CHAMBER IN BOAT SECTION

PORT AUTHORITY

CONTRACT NO. NSC-006
DWG. NO. TN703-1 SHT. 135A-1

$DATE$ $TIME$
$FILE$

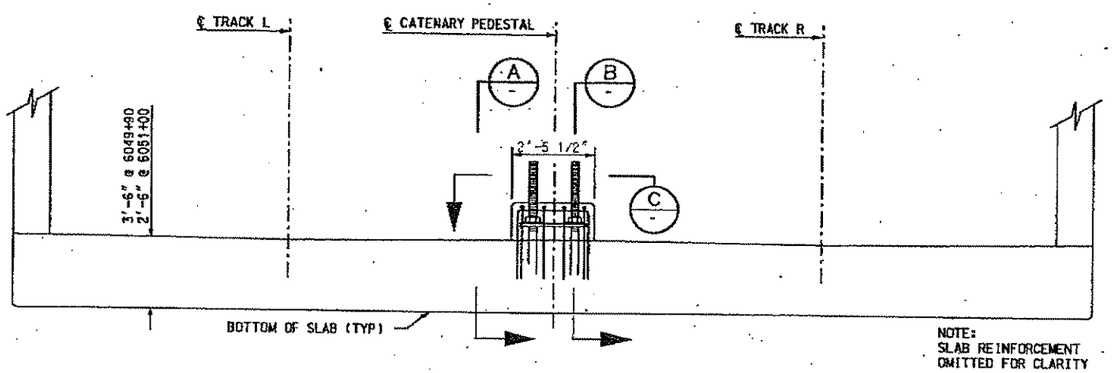

BOAT CROSS SECTION AT CATENARY PEDESTALS (6049+90 / 6051+00) A TN615

NOT TO SCALE (LOOKING UPSTATION)

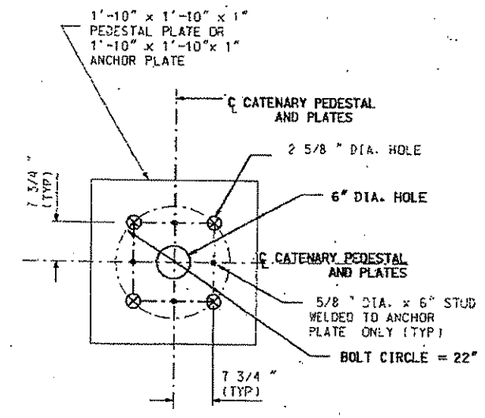

DETAIL 1

NOT TO SCALE

NOTES

1. MATERIALS AND CONSTRUCTION SHALL CONFORM TO THE TECHNICAL PROVISIONS.
2. MATERIAL SPECIFICATION (PER ASTM DESIGNATION)
   ANCHOR BOLTS/ANCHOR ROD : A 449
   HEAVY HEX NUTS : A 563/GRADE A
   FLAT WASHERS : F 436
   STUD: AWS D1.1 "TYPE B" A108/GRADE 1015 OR 1020
3. ANCHOR BOLTS, INCLUDING ALL EXPOSED NUTS AND WASHERS, ANCHOR RODS, AND ALL EXPOSED STEEL SHALL BE HOT DIPPED GALVANIZED.
4. WELDING SHALL BE IN ACCORDANCE WITH AWS D1.1 SPECIFICATIONS.
5. PROVIDE BOLT PATTERN TEMPLATE FOR ANCHOR BOLT INSTALLATION.
6. ANCHOR BOLT THREADS SHALL BE PROTECTED PRIOR TO, DURING, AND AFTER INSTALLATION WITH PLASTIC TUBE END CAPS TO BE LEFT IN PLACE.
7. FOR DETAILED SLAB SECTION, SEE DRAWING NOS. TN660 AND TN698.
8. FOR SLAB PLANS, SEE DRAWING NOS. TN615 AND TN616.
9. FOR SLAB PROFILES, SEE DRAWING NOS. TN634 THRU TN635.

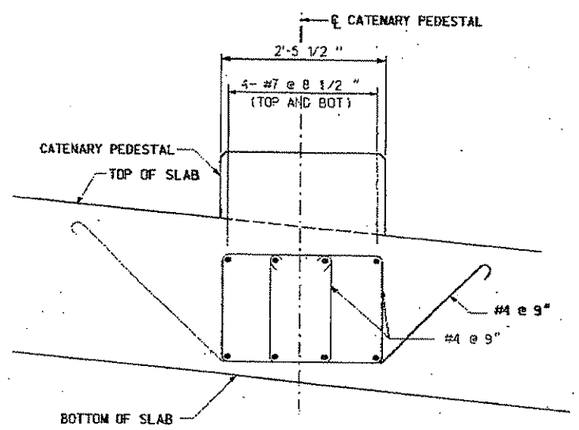

NOTE: SLOPE OF DECK EXAGGERATED FOR CLARITY.

A SECTION

NOT TO SCALE

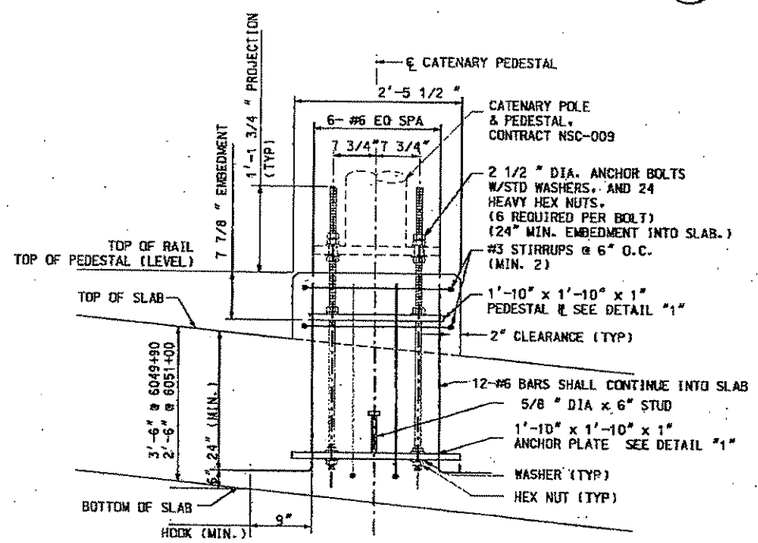

NOTE: SLOPE OF DECK EXAGGERATED FOR CLARITY.

B SECTION

NOT TO SCALE

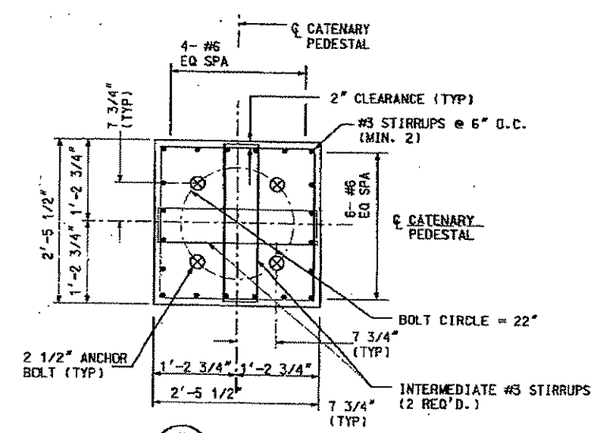

C SECTION

NOT TO SCALE

Gannett Fleming Transit & Rail Systems

NO.	DATE	DESCRIPTION

REVISIONS

THE PREPARATION OF THIS DOCUMENT HAS BEEN FINANCED IN PART THROUGH A GRANT FROM THE FEDERAL TRANSIT ADMINISTRATION, U.S. DEPARTMENT OF TRANSPORTATION, UNDER THE URBAN MASS TRANSPORTATION ACT OF 1964, AS AMENDED. FOR THE PORT AUTHORITY OF ALLEGHENY COUNTY, PENNSYLVANIA.

COMMONWEALTH OF PENNSYLVANIA PROFESSIONAL ENGINEER TERRY A. SHANTZ

SIGNATURE

DMJM HARRIS | AECOM
FOUR GATEWAY CENTER
20TH FLOOR
PITTSBURGH, PA. 15222

APPROVED 11/02/05 DATE

DESIGNED	SA
DRAWN	RJ
CHECKED	GT
IN CHARGE	CDJ
DATE	NOV. 2, 2005
SCALE	AS NOTED

PORT AUTHORITY OF ALLEGHENY COUNTY
PITTSBURGH PENNSYLVANIA

NORTH SHORE CONNECTOR

NORTH SIDE STATION AND CUT AND COVER TUNNEL WEST
CATENARY ANCHOR BOLT LAYOUT AND DETAILS

PORT AUTHORITY

CONTRACT NO. NSC-006
DWG. NO. TN712 SHT. 199

DATE: 09/27/05 TIME: 1:50
FILE: K:\NSF\SUBS\RAIL\CFTRACT\TN711.DGN

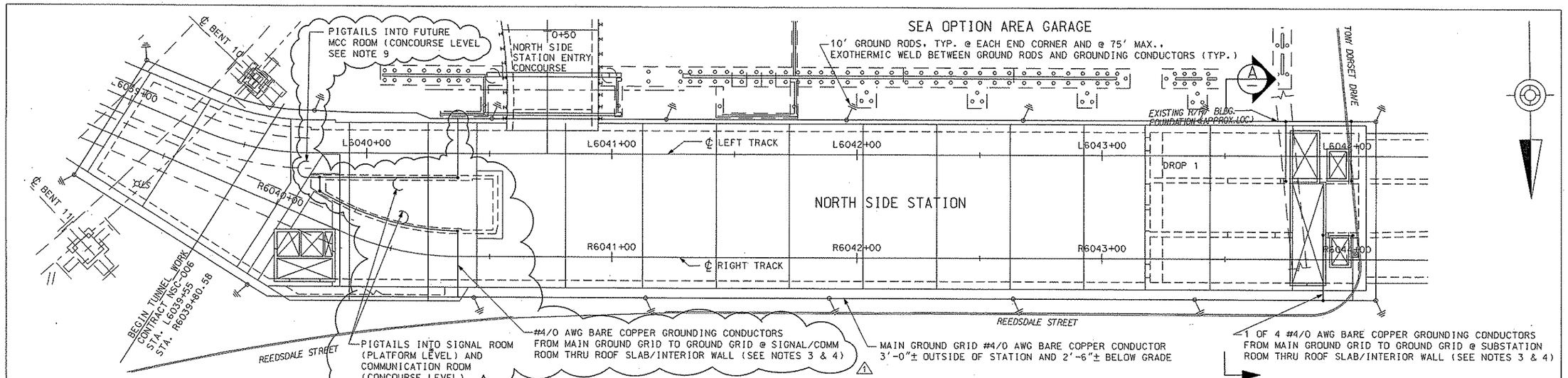

PLAN MAIN GROUND GRID @ NORTH SIDE STATION

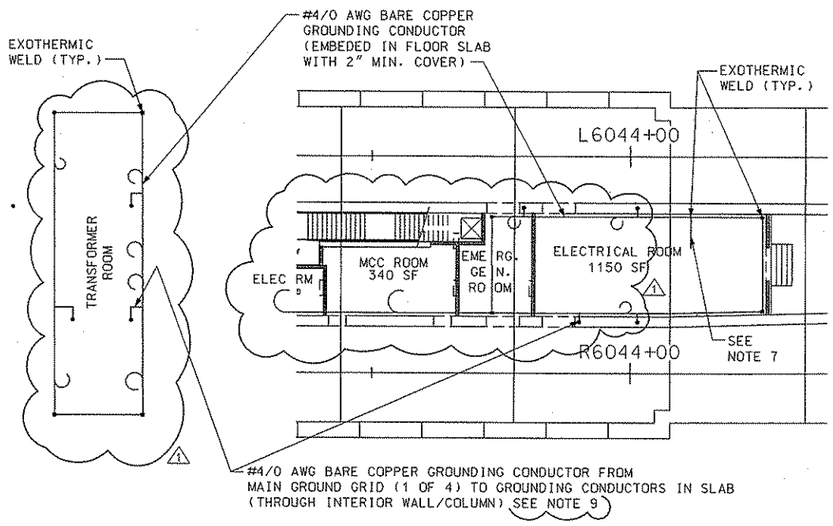

TRANSFORMER ROOM GROUNDING LAYOUT PLAN

(AT CONCOURSE LEVEL)

ELECTRICAL ROOM GROUNDING LAYOUT PLAN

(AT PLATFORM LEVEL)

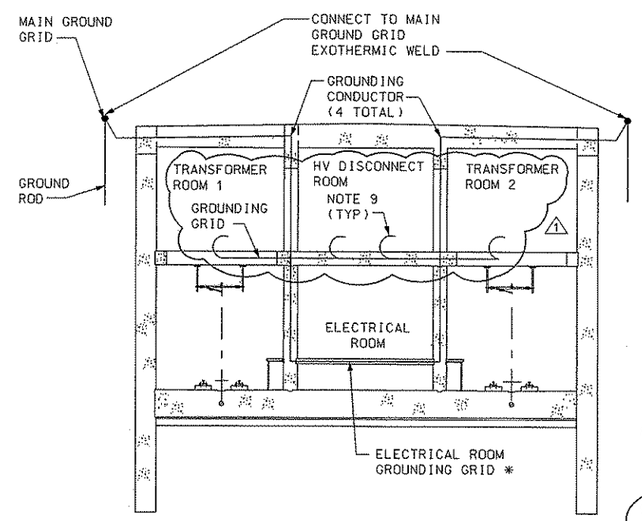

SECTION A

* GROUNDING GRID SIMILAR AT THE EAST END OF THE STATION FOR THE COMMUNICATION AND SIGNAL ROOMS

NOTES:

NORTH SIDE STATION BUILDING GROUNDING :

1. MAINTAIN RESISTANCE TO GROUND OF 2 OHMS OR LESS.
2. BOND EACH JOINT BY EXOTHERMIC WELDING.
3. INSTALL #4/O AWG BARE COPPER GROUNDING CONDUCTOR FROM MAIN GROUND GRID AND BOND TO REBAR IN WALLS. EXTEND GROUNDING CONDUCTOR TO INVERT AND BOND TO REBAR IN INVERT. BOND GROUNDING CONDUCTORS TO ANCHORS IN INVERT.
4. BOND REBAR IN ROOF SLAB TO REBAR IN VERTICAL WALLS AND COLUMNS WITH #4/O AWG BARE COPPER GROUNDING CONDUCTOR.
5. INSTALL GROUND TEST WELL ON OPPOSITE SIDES OF LONGEST SIDES OF MAIN GRID.
6. BOND ALL EXPOSED METAL, E.G., HANDRAILS, ETC. TO THE GROUNDING SYSTEM.

NORTH SIDE STATION SUBSTATION (ELECTRICAL ROOM) GROUNDING :

7. INSTALL #4/O AWG BARE COPPER GROUNDING CONDUCTORS IN SUBSTATION FLOOR SLAB AND BOND FROM THIS SUBSTATION GROUNDING GRID TO EACH INDIVIDUAL CUBICLE OF THE SUBSTATION EQUIPMENT LINEUP. COORDINATE WITH NSC-009 CONTRACT PRIOR TO CASTING SLAB.

NORTH SIDE STATION SUBSTATION (TRANSFORMER ROOM) GROUNDING :

8. INSTALL #4/O AWG BARE COPPER GROUNDING CONDUCTOR IN THE TRANSFORMER VAULT ROOM FLOOR SLAB. BOND FROM THIS GROUNDING GRID TO EACH HV DISCONNECT SWITCH. TWO (2) SEPERATE BONDS SHALL BE MADE TO EACH DISCONNECT SWITCH AND TRANSFORMER.
9. FURNISH AN EXOTHERMIC WELD TO A 6 FOOT PIGTAIL OF 4/O AWG BARE COPPER GROUNDING CONDUCTOR TO THE GROUNDING GRID. THE PIGTAIL SHALL BE ROLLED UP IN EACH ROOM TO BE LATER CONNECTED TO A GROUND BUS OR ELECTRICAL EQUIPMENT.

NO.	DATE	DESCRIPTION
1	6/20/08	REVISION 9 - ADDED PIGTAILS AND ADD'L GROUNDING
1	12/09/05	ADDENDUM 2 - DRAWING MODIFIED

REVISIONS

THE PREPARATION OF THIS DOCUMENT HAS BEEN FINANCED IN PART THROUGH A GRANT FROM THE FEDERAL TRANSIT ADMINISTRATION, U.S. DEPARTMENT OF TRANSPORTATION, UNDER THE URBAN MASS TRANSPORTATION ACT OF 1964, AS AMENDED, FOR THE PORT AUTHORITY OF ALLEGHENY COUNTY, PENNSYLVANIA.

COMMONWEALTH OF PENNSYLVANIA REGISTERED PROFESSIONAL PETER DENNIS MAURITZ CHOIMEER PE27163

SIGNATURE

DMJM HARRIS | AECOM
FOUR GATEWAY CENTER
20TH FLOOR
PITTSBURGH, PA. 15222

APPROVED — DATE 6/25/08

DESIGNED	RS
DRAWN	DC
CHECKED	DSL
IN CHARGE	GY
DATE	NOV. 2, 2005
SCALE	NTS

PORT AUTHORITY OF ALLEGHENY COUNTY
PITTSBURGH PENNSYLVANIA

NORTH SHORE CONNECTOR
NORTH SIDE STATION AND CUT & COVER TUNNEL WEST
NORTH SIDE STATION GROUND GRID

PORT AUTHORITY

CONTRACT NO. NSC-006
DWG. NO. TN713-1 SHT. 140-1

$DATE$ $TIME$
$FILE$

NOTES:

1. SEE WP DRAWINGS FOR DETAILS OF 4" DIAMETER PVC PIPE FROM WATERPROOF COLLECTION SYSTEM TO TUNNEL DRAINAGE SYSTEM. TYPICAL BETWEEN STATIONS L6040+55.00 AND L6043+88.00, EACH TRACK. 4" DIAMETER PVC PIPE IS INCIDENTAL TO TUNNEL WATERPROOFING.

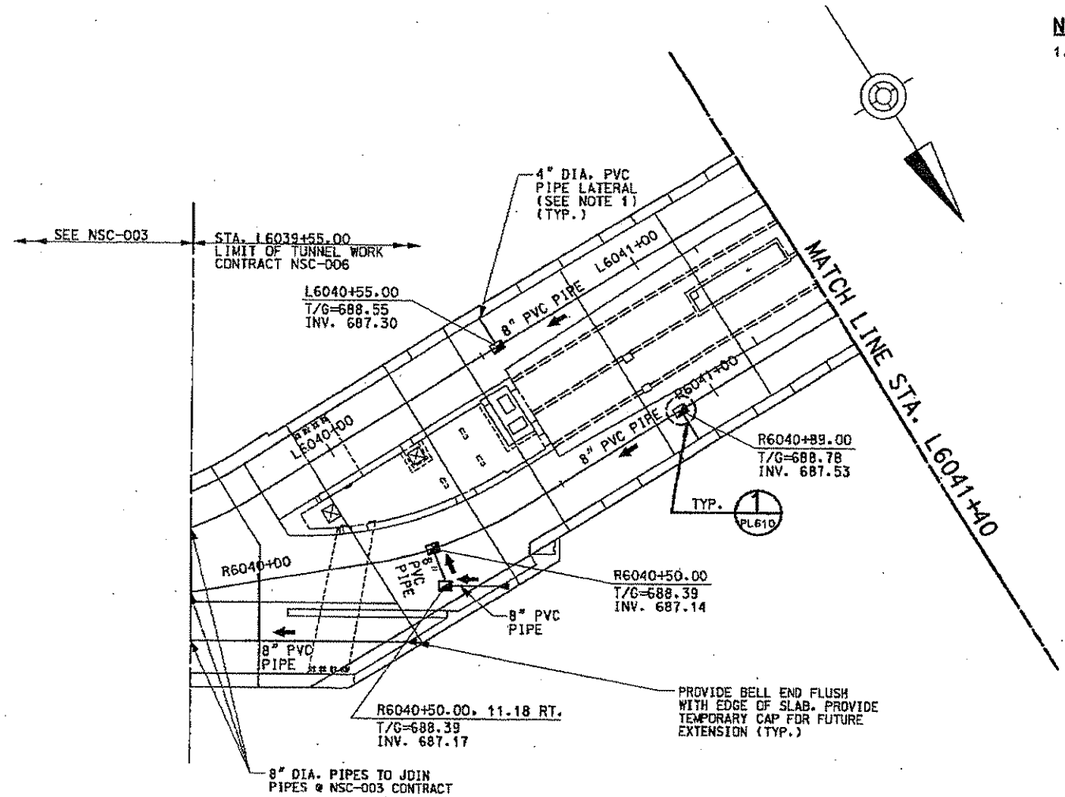

TUNNEL DRAINAGE PLAN

STA. L6039+55 TO STA. L6041+40

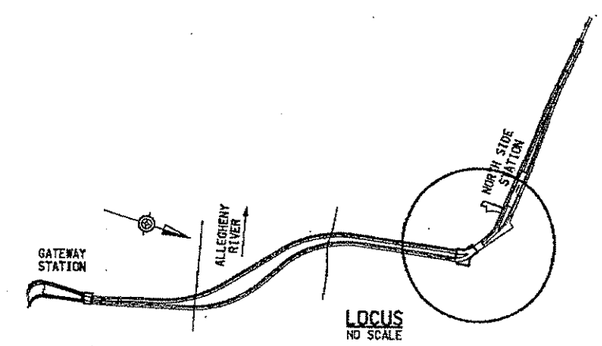

LOCUS
NO SCALE

NO.	DATE	DESCRIPTION

REVISIONS

THE PREPARATION OF THIS DOCUMENT HAS BEEN FINANCED IN PART THROUGH A GRANT FROM THE FEDERAL TRANSIT ADMINISTRATION, U.S. DEPARTMENT OF TRANSPORTATION, UNDER THE URBAN MASS TRANSPORTATION ACT OF 1964, AS AMENDED. FOR THE PORT AUTHORITY OF ALLEGHENY COUNTY, PENNSYLVANIA.

COMMONWEALTH OF PENNSYLVANIA REGISTERED PROFESSIONAL ENGINEER PETER DENNIS MAURITZ PE071162

SIGNATURE

DMJM HARRIS | AECOM
FOUR GATEWAY CENTER
20TH FLOOR
PITTSBURGH, PA. 15222

APPROVED — 11-2-05 DATE

DESIGNED	TM
DRAWN	DC
CHECKED	TG
IN CHARGE	PAR
DATE	NOV. 2, 2005
SCALE	1" = 20'-0" (20' 10' 0 20')

PORT AUTHORITY OF ALLEGHENY COUNTY
PITTSBURGH PENNSYLVANIA

NORTH SHORE CONNECTOR
NORTH SIDE STATION AND CUT & COVER TUNNEL WEST
TUNNEL DRAINAGE PLAN
STA. L6039+55 TO STA. 6041+40

PORT AUTHORITY

CONTRACT NO. NSC-006
DWG. NO. PL600 SHT. 332

10/26/2005 5:28:10 PM
n:\rigs\fthalys\ns c&c\06p600.dgn

NOTES:

1. SEE WP DRAWINGS FOR DETAILS OF 4" DIAMETER PVC PIPE FROM WATERPROOF COLLECTION SYSTEM TO TUNNEL DRAINAGE SYSTEM. TYPICAL BETWEEN STATIONS L6040+55.00 AND L6043+88.00, EACH TRACK. 4" DIAMETER PVC PIPE IS INCIDENTAL TO TUNNEL WATERPROOFING.
2. SEE DRAWING PL607 FOR WEST ANCILLARY FLOOR DRAIN PIPE TIE INTO TRACK DRAINAGE SYSTEM.

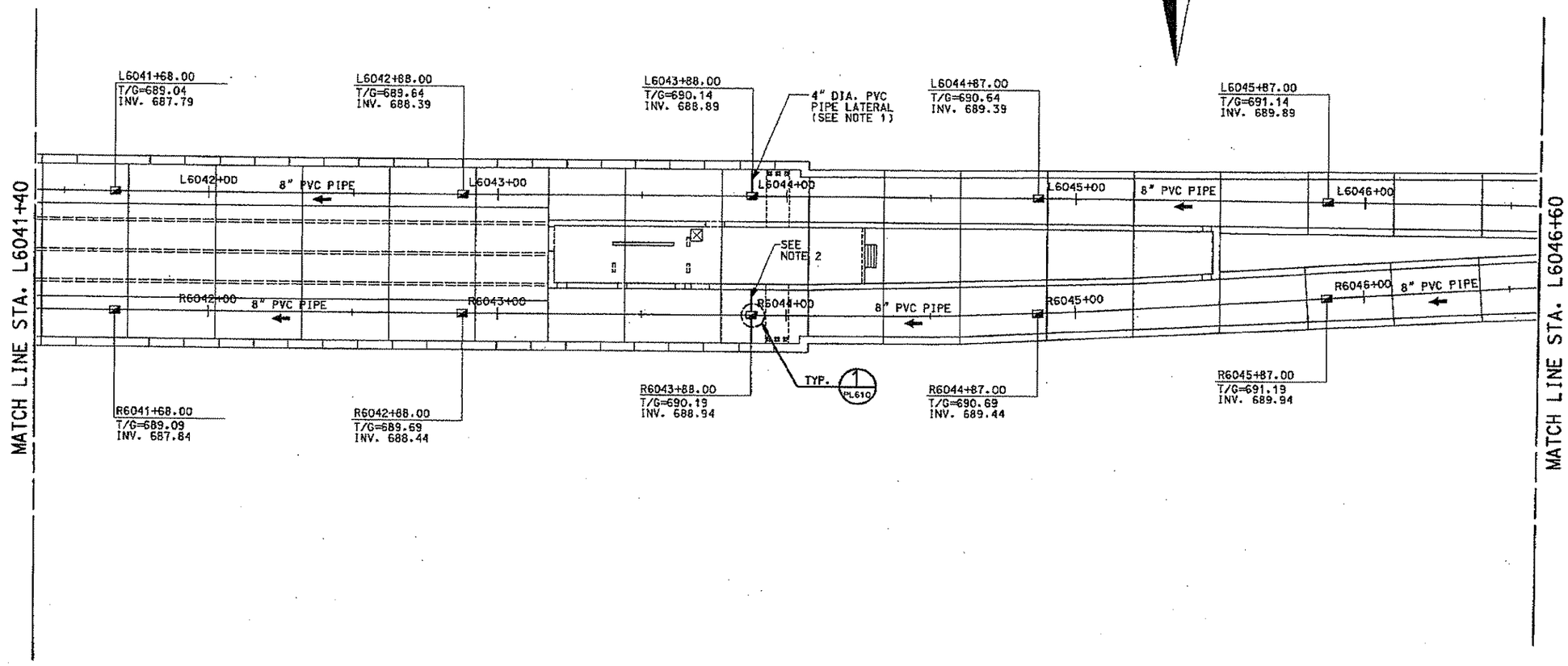

TUNNEL DRAINAGE PLAN

STA. L6041+40 TO STA. L6046+60

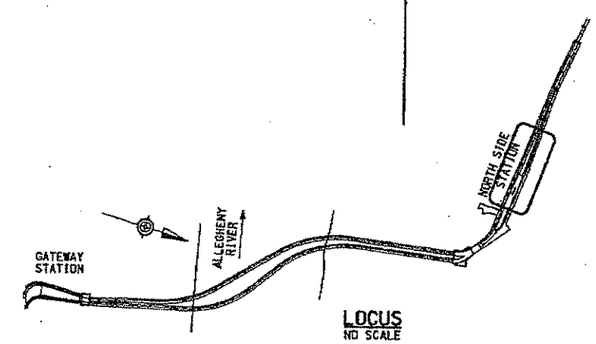

LOCUS
NO SCALE

NO.	DATE	DESCRIPTION

REVISIONS

THE PREPARATION OF THIS DOCUMENT HAS BEEN FINANCED IN PART THROUGH A GRANT FROM THE FEDERAL TRANSIT ADMINISTRATION, U.S. DEPARTMENT OF TRANSPORTATION, UNDER THE URBAN MASS TRANSPORTATION ACT OF 1964, AS AMENDED, FOR THE PORT AUTHORITY OF ALLEGHENY COUNTY, PENNSYLVANIA.

COMMONWEALTH OF PENNSYLVANIA REGISTERED PROFESSIONAL ENGINEER PETER DENNIS MAURITZ PE071162

SIGNATURE

DMJM HARRIS | AECOM
FOUR GATEWAY CENTER
20TH FLOOR
PITTSBURGH, PA. 15222

APPROVED — 11-2-05 DATE

DESIGNED	TM
DRAWN	DC
CHECKED	TG
IN CHARGE	PAR
DATE	NOV. 2, 2005
SCALE	1" = 20'-0"

20' 10' 0 20'

PORT AUTHORITY OF ALLEGHENY COUNTY
PITTSBURGH PENNSYLVANIA

NORTH SHORE CONNECTOR
NORTH SIDE STATION AND CUT & COVER TUNNEL WEST
TUNNEL DRAINAGE PLAN
STA. L6041+40 TO STA. L6046+60

PORT AUTHORITY

CONTRACT NO. NSC-008
DWG. NO. PL601 SHT. 333

10/26/2005 5:28:41PM
n:\nsc\final\pw\ne ckt\06pl601.dgn

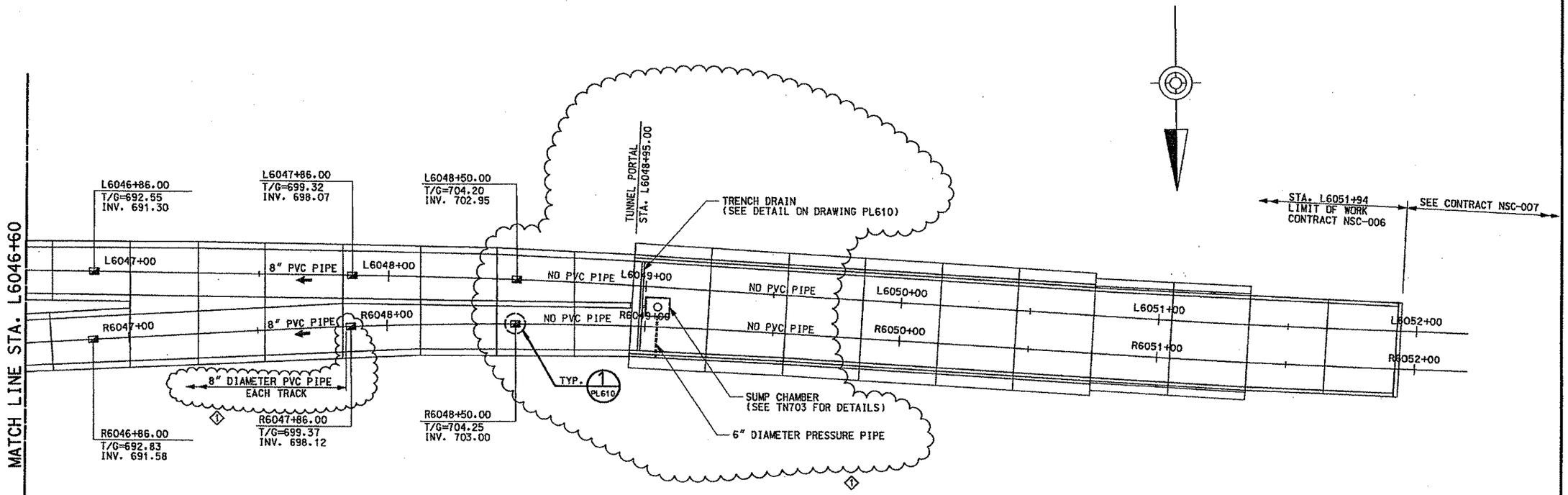

TUNNEL DRAINAGE PLAN

STA. L6046+60 TO STA. L6051+94

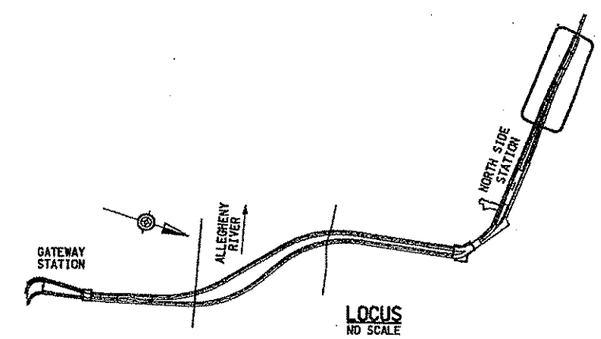

NO.	DATE	DESCRIPTION
1	12/09/05	ADDENDUM 2 - DRAWING MODIFIED

REVISIONS

THE PREPARATION OF THIS DOCUMENT HAS BEEN FINANCED IN PART THROUGH A GRANT FROM THE FEDERAL TRANSIT ADMINISTRATION, U.S. DEPARTMENT OF TRANSPORTATION, UNDER THE URBAN MASS TRANSPORTATION ACT OF 1964, AS AMENDED, FOR THE PORT AUTHORITY OF ALLEGHENY COUNTY, PENNSYLVANIA.

COMMONWEALTH OF PENNSYLVANIA REGISTERED PROFESSIONAL ENGINEER PETER DENNIS MAURITZ PE071163

SIGNATURE

DMJM HARRIS | AECOM
FOUR GATEWAY CENTER
20TH FLOOR
PITTSBURGH, PA. 15222

APPROVED

11-2-05
DATE

DESIGNED	TM
DRAWN	DC
CHECKED	TG
IN CHARGE	PAR
DATE	NOV. 2, 2005
SCALE	1"= 20'-0"

20' 10' 0 20'

PORT AUTHORITY OF ALLEGHENY COUNTY
PITTSBURGH PENNSYLVANIA

NORTH SHORE CONNECTOR
NORTH SIDE STATION AND CUT & COVER TUNNEL WEST
TUNNEL DRAINAGE PLAN
STA. L6046+60 TO STA. L6051+94

PORT AUTHORITY

CONTRACT NO. NSC-006
DWG. NO. PL602 SHT. 334

12/7/2005 5:23:03 PM
n:\ns-f\final\gw\ns c&c\06pl602.dgn

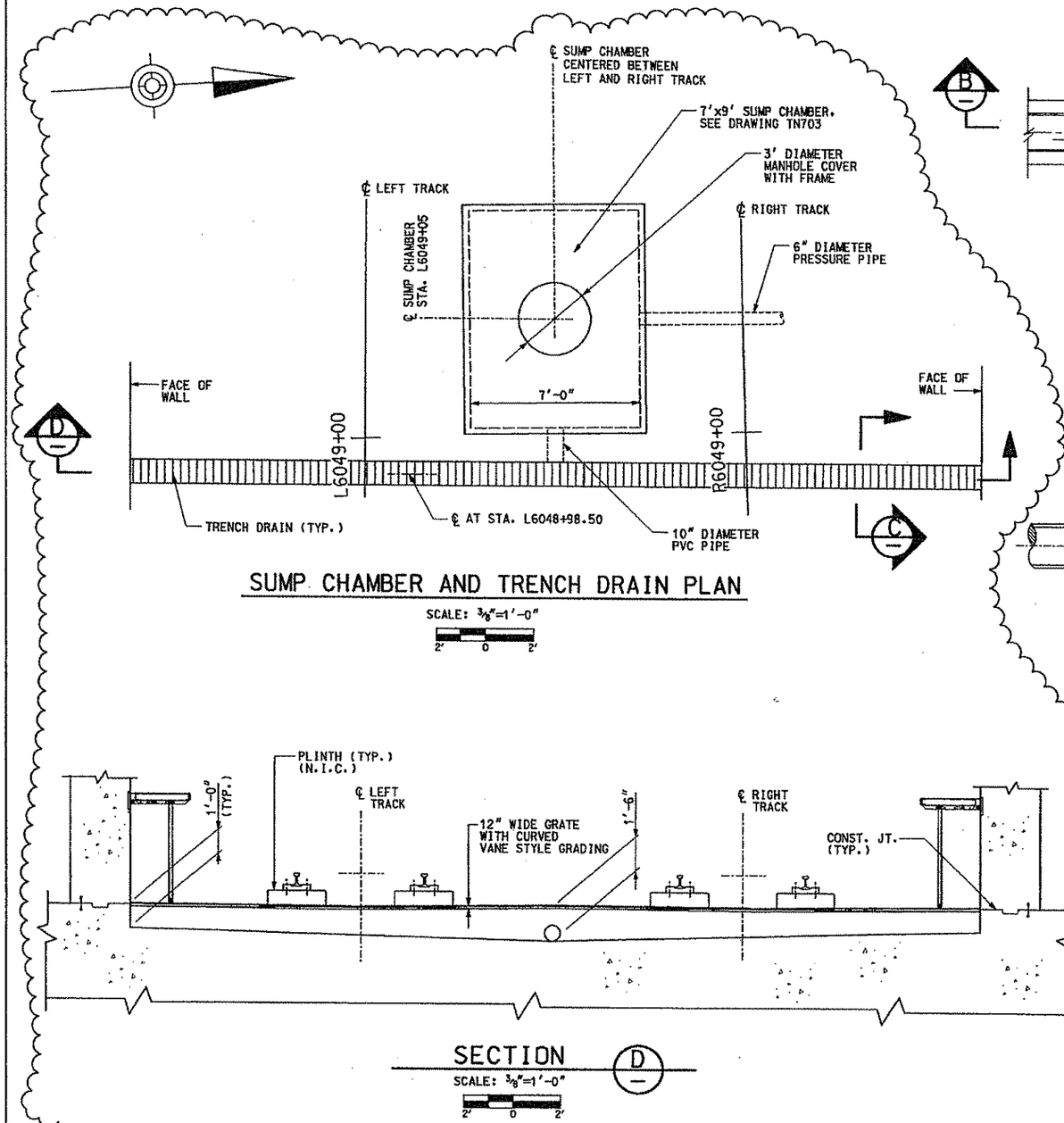

SUMP CHAMBER AND TRENCH DRAIN PLAN

SCALE: 3/8"=1'-0"

SECTION D

SCALE: 3/8"=1'-0"

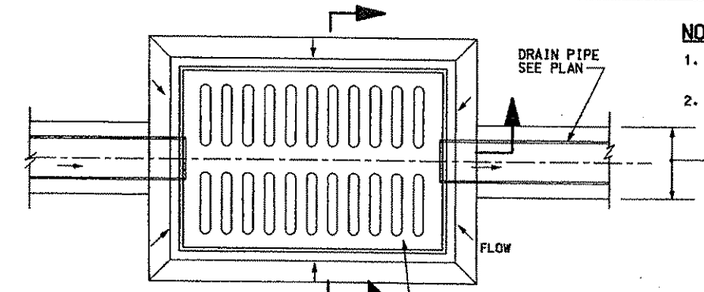

DETAIL 2

SCALE: 1 1/2"=1'-0"

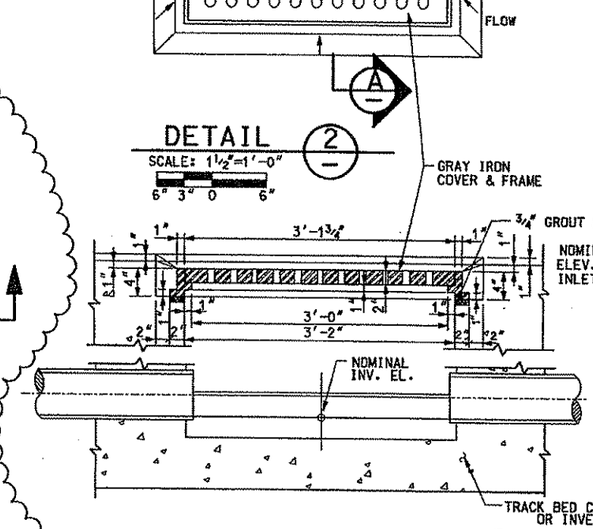

SECTION B

SCALE: 1 1/2"=1'-0"

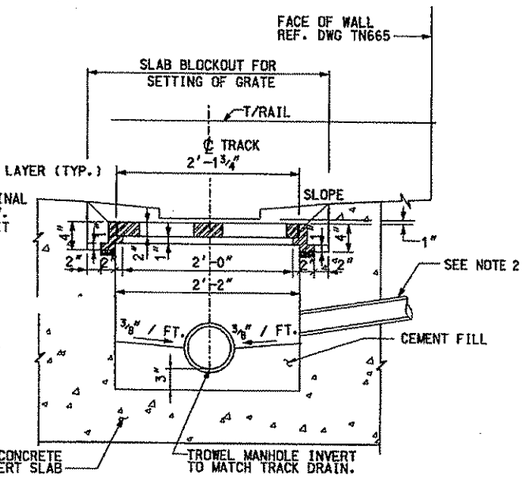

SECTION A

SCALE: 1 1/2"=1'-0"

NOTES:

1. SEE DRAWINGS PL600 TO PL602. FOR DRAIN INLET LOCATION AND TOP OF GRATE AND INVERT ELEVATIONS.
2. 4" DIA. PVC PIPE LATERAL FROM WATER PROOFING COLLECTION SYSTEM (SEE PLAN FOR LOCATION)

DETAIL 1

TRACK LEVEL DRAIN INLET

NOTE: FORM FLOW CHANNELS AFTER PIPES ARE IN PLACE AND DRAIN STRUCTURE CONCRETE IS SET.

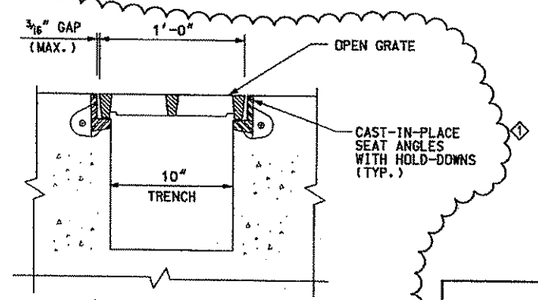

SECTION THRU TRENCH DRAIN C

NTS

NO.	DATE	DESCRIPTION
1	12/09/05	ADDENDUM 2 - DRAWING MODIFIED

REVISIONS

THE PREPARATION OF THIS DOCUMENT HAS BEEN FINANCED IN PART THROUGH A GRANT FROM THE FEDERAL TRANSIT ADMINISTRATION, U.S. DEPARTMENT OF TRANSPORTATION, UNDER THE URBAN MASS TRANSPORTATION ACT OF 1964, AS AMENDED, FOR THE PORT AUTHORITY OF ALLEGHENY COUNTY, PENNSYLVANIA.

PETER DENNIS MAURITZ — REGISTERED PROFESSIONAL ENGINEER — PE071183 — PENNSYLVANIA

SIGNATURE

DMJM HARRIS | AECOM

FOUR GATEWAY CENTER
20TH FLOOR
PITTSBURGH, PA. 15222

APPROVED — 11-2-05 DATE

DESIGNED	TM
DRAWN	DC
CHECKED	TG
IN CHARGE	PAR
DATE	NOV. 2, 2005
SCALE	AS SHOWN

PORT AUTHORITY OF ALLEGHENY COUNTY
PITTSBURGH PENNSYLVANIA

NORTH SHORE CONNECTOR
NORTH SIDE STATION AND CUT & COVER TUNNEL WEST
TUNNEL DRAINAGE DETAILS
SHEET 1 OF 1

PORT AUTHORITY

CONTRACT NO. NSC-006

DWG. NO. PL610 — SHT. 340

12/7/2005 5:23:10 PM
n:\ns\f\find\gw\ns c&c\06pl610.dgn

NOTES:

1. ALL STATIONS AND P.G. ELEVATIONS SHOWN ON THE ELEVATION VIEW FOR SUBSTRUCTURE UNITS ARE GIVEN ALONG LEFT TRACK VERTICAL AND HORIZONTAL ALIGNMENTS.
2. CONTOURS ARE NOT SHOWN FOR CLARITY.
3. ELEVATION VIEW IS A PROJECTION OF THE PLAN VIEW.

LEGEND

- * HINGED PIN BEARINGS
- ** GUIDED PTFE EXPANSION BEARING
- *** FIXED POT BEARING
- ● CATENARY POLES
- PTFE POLYTETRAFLUORETHYLENE
- 2001 CORE BORINGS
- 2003 CORE BORINGS
- VERIFICATION TEST PILES
- 8R CURVE NUMBER (TYP.)

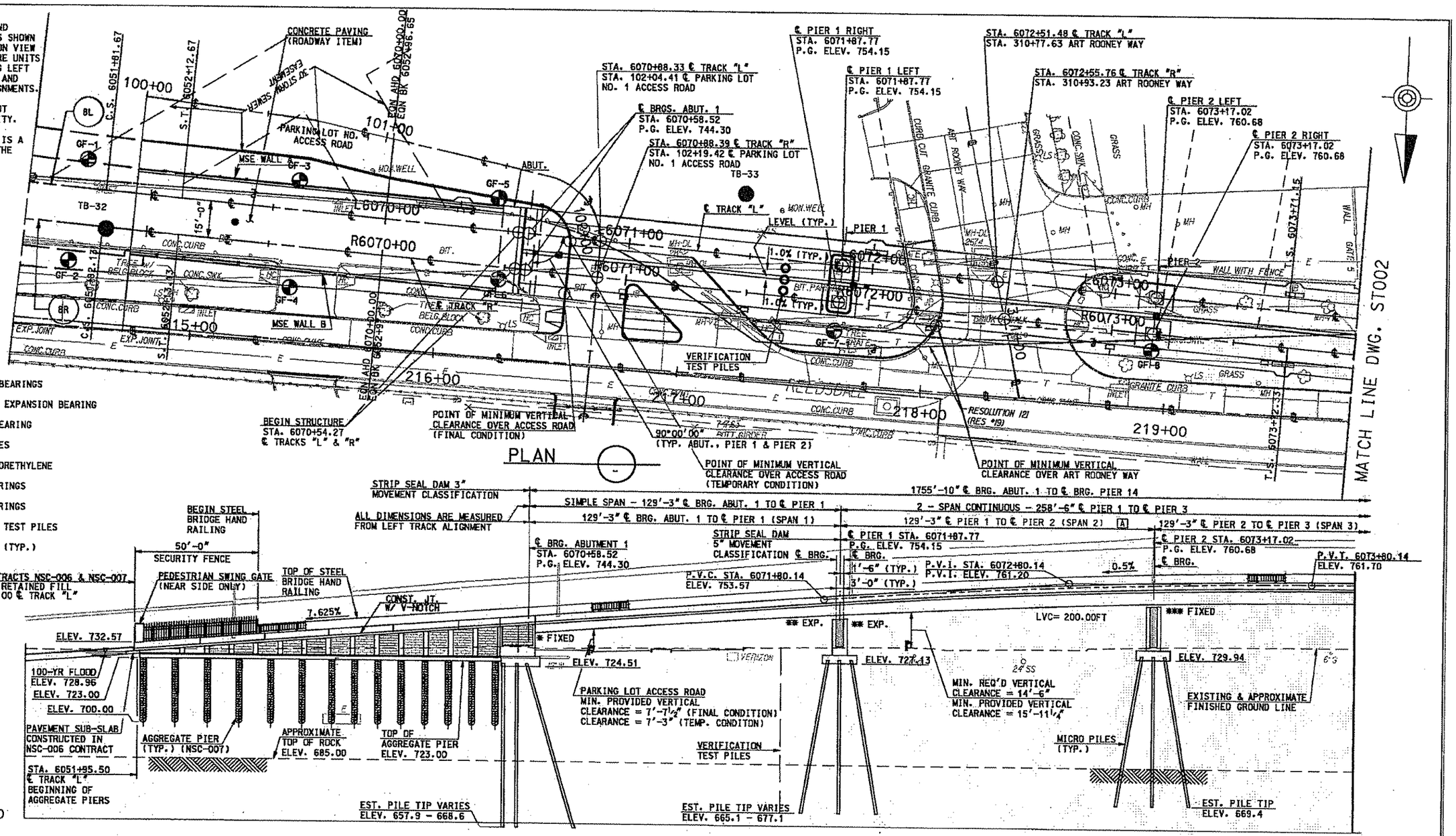

A CONSTRUCT DECK DURING THE TIME FRAME IDENTIFIED IN THE TECHNICAL PROVISIONS

SCALE 20' 15' 10' 5' 0 20'

REFERENCES:

1. FOR RAILING POST SPACINGS AND DETAILS, SEE DRAWINGS ST111, ST023 & ST088 THRU ST101.
2. FOR HORIZONTAL AND VERTICAL CURVE INFORMATION, SEE DRAWINGS TK100 THRU TK114.
3. FOR TYPICAL SECTIONS, SEE DRAWINGS ST008 THRU ST012.
4. FOR ADDITIONAL DIMENSIONS SEE DRAWINGS ST014 THRU ST016.

Gannett Fleming
GANNETT FLEMING, INC.
601 Holiday Drive
Foster Plaza III
Suite 200
Pittsburgh, PA. 15220

NO.	DATE	DESCRIPTION

REVISIONS

THE PREPARATION OF THIS DOCUMENT HAS BEEN FINANCED IN PART THROUGH A GRANT FROM THE FEDERAL TRANSIT ADMINISTRATION, U.S. DEPARTMENT OF TRANSPORTATION, UNDER THE URBAN MASS TRANSPORTATION ACT OF 1964, AS AMENDED. FOR THE PORT AUTHORITY OF ALLEGHENY COUNTY, PENNSYLVANIA.

COMMONWEALTH OF PENNSYLVANIA REGISTERED PROFESSIONAL ENGINEER THOMAS G. LEECH 021153

SIGNATURE

DMJM HARRIS | AECOM
FOUR GATEWAY CENTER
20TH FLOOR
PITTSBURGH, PA. 15222

APPROVED 3/10/08 DATE

DESIGNED	CTV
DRAWN	JWM - EPV
CHECKED	CTV
IN CHARGE	TGL
DATE	3/10/08
SCALE	AS SHOWN

PORT AUTHORITY OF ALLEGHENY COUNTY
PITTSBURGH PENNSYLVANIA

NORTH SHORE CONNECTOR
AERIAL STRUCTURE, RETAINED FILL, DEMOLITION OF MILLER PRINTING
GENERAL PLAN & ELEVATION
STA. 6051+50 TO STA. 6074+00 LEFT TRACK

Port Authority

CONTRACT NO. NSC-007
DWG. NO. ST001 SHT. 134

/final/gw/aerial/gw_st001.dgn 3/7/2008 5:59:39 PM

LEGEND

** GUIDED PTFE EXPANSION BEARING

*** FIXED POT BEARING

● CATENARY POLES

PTFE POLYTETRAFLUORETHYLENE

REFERENCES:

1. FOR RAILING POST SPACINGS AND DETAILS, SEE DRAWINGS ST111 AND ST088 THRU ST101.
2. FOR HORIZONTAL AND VERTICAL CURVE INFORMATION, SEE DRAWINGS TK100 THRU TK114.
3. FOR TYPICAL SECTIONS, SEE DRAWINGS ST008 THRU ST012.
4. FOR ADDITIONAL DIMENSIONS SEE DRAWINGS ST014 THRU ST016.
5. FOR LEGEND, SEE DRAWING ST001.

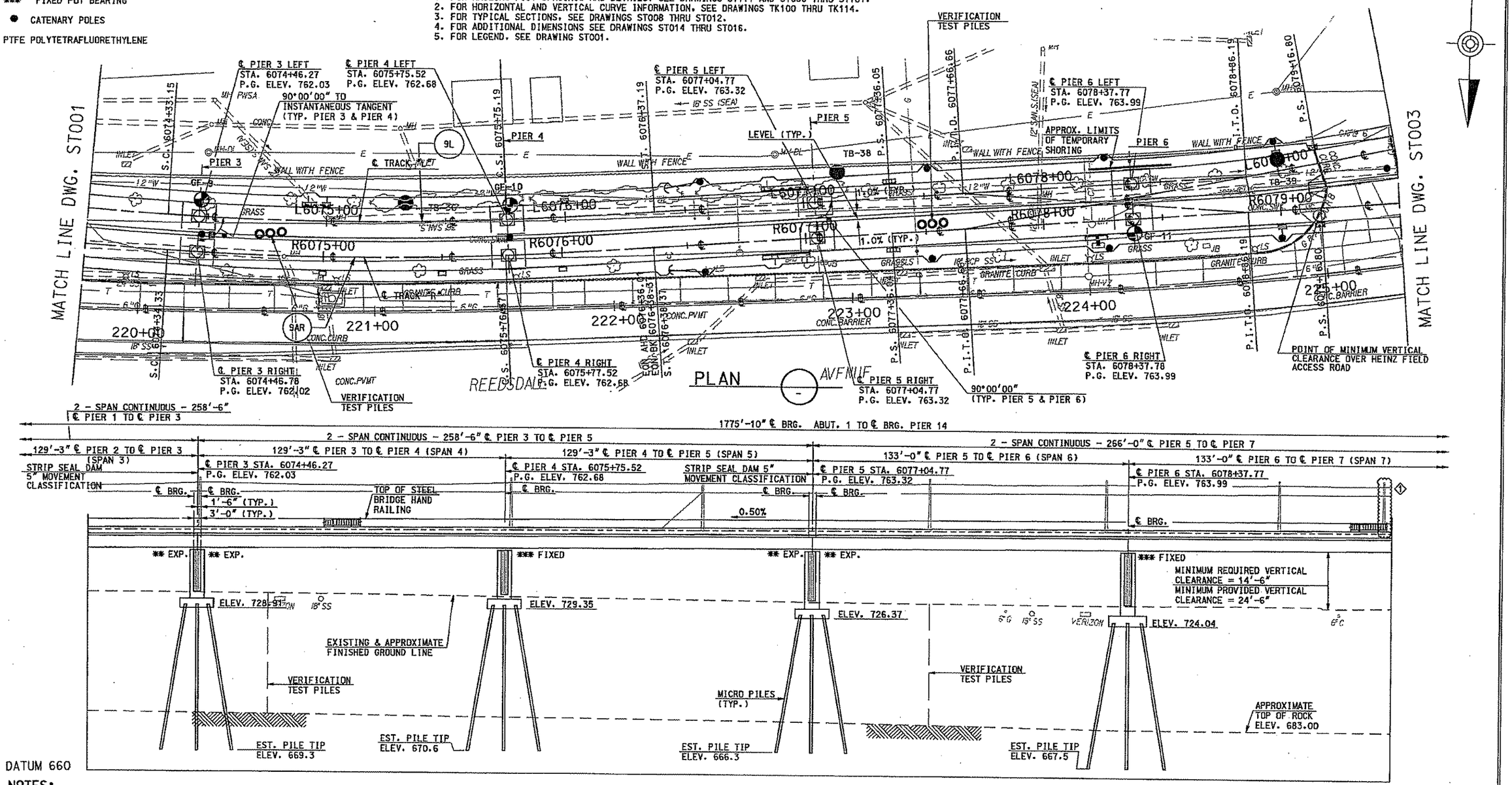

NOTES:

1. ALL STATIONS AND P.G. ELEVATIONS SHOWN ON THE ELEVATION VIEW FOR SUBSTRUCTURE UNITS ARE GIVEN ALONG LEFT TRACK VERTICAL AND HORIZONTAL ALIGNMENTS.
2. CONTOURS ARE NOT SHOWN FOR CLARITY.
3. ELEVATION VIEW IS A PROJECTION OF THE PLAN VIEW.

Gannett Fleming

GANNETT FLEMING, INC.
601 Holiday Drive
Foster Plaza III
Suite 200
Pittsburgh, PA. 15220

NO.	DATE	DESCRIPTION
1	4-16-08	ADDENDUM 1 - DRAWING MODIFIED

REVISIONS

THE PREPARATION OF THIS DOCUMENT HAS BEEN FINANCED IN PART THROUGH A GRANT FROM THE FEDERAL TRANSIT ADMINISTRATION, U.S. DEPARTMENT OF TRANSPORTATION, UNDER THE URBAN MASS TRANSPORTATION ACT OF 1964, AS AMENDED. FOR THE PORT AUTHORITY OF ALLEGHENY COUNTY, PENNSYLVANIA.

COMMONWEALTH OF PENNSYLVANIA REGISTERED PROFESSIONAL THOMAS G. LEECH 021833 ENGINEER

SIGNATURE

DMJM HARRIS | AECOM
FOUR GATEWAY CENTER
20TH FLOOR
PITTSBURGH, PA. 15222

APPROVED 3/10/08 DATE

DESIGNED	CTV
DRAWN	JWM - EPV
CHECKED	CTV
IN CHARGE	TGL
DATE	3/10/08
SCALE	AS SHOWN

PORT AUTHORITY OF ALLEGHENY COUNTY
PITTSBURGH PENNSYLVANIA

NORTH SHORE CONNECTOR
AERIAL STRUCTURE, RETAINED FILL, DEMOLITION OF MILLER PRINTING
GENERAL PLAN & ELEVATION
STA. 6074+00 TO STA. 6079+50 LEFT TRACK

Port Authority

CONTRACT NO. NSC-007
DWG. NO. ST002 SHT. 135

/gw st002.dgn 4/15/2008 10:46:42 AM

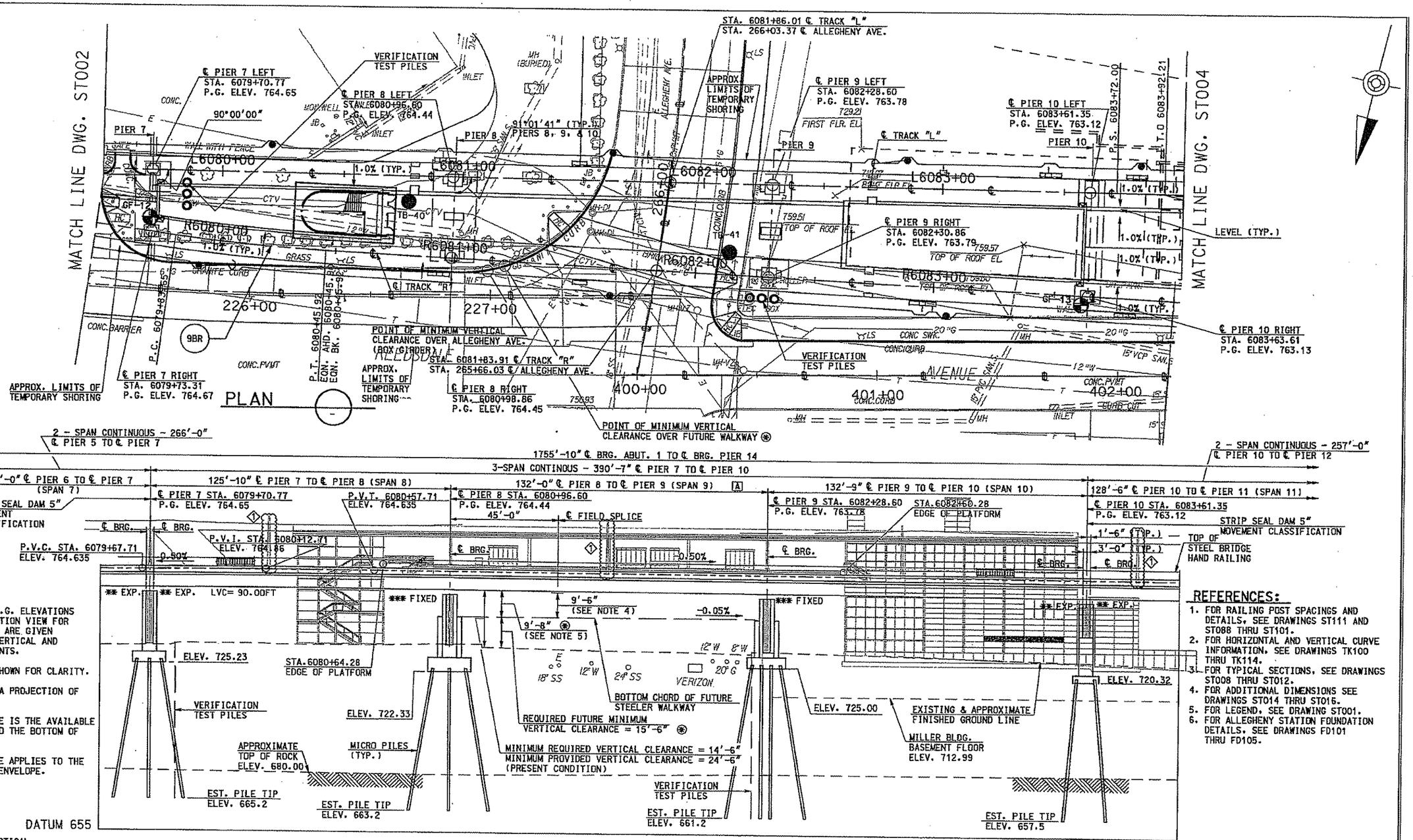

NOTES:

1. ALL STATIONS AND P.G. ELEVATIONS SHOWN ON THE ELEVATION VIEW FOR SUBSTRUCTURE UNITS ARE GIVEN ALONG LEFT TRACK VERTICAL AND HORIZONTAL ALIGNMENTS.
2. CONTOURS ARE NOT SHOWN FOR CLARITY.
3. ELEVATION VIEW IS A PROJECTION OF THE PLAN VIEW.
4. THE 9'-6" CLEARANCE IS THE AVAILABLE FUTURE DIMENSION TO THE BOTTOM OF THE ENVELOPE.
5. THE 9'-8" CLEARANCE APPLIES TO THE AVAILABLE FUTURE ENVELOPE.

LEGEND:

DATUM 655

⊛ MINIMUM PROVIDED VERTICAL CLEARANCE IS 25'-2"

REFERENCES:

1. FOR RAILING POST SPACINGS AND DETAILS, SEE DRAWINGS ST111 AND ST088 THRU ST101.
2. FOR HORIZONTAL AND VERTICAL CURVE INFORMATION, SEE DRAWINGS TK100 THRU TK114.
3. FOR TYPICAL SECTIONS, SEE DRAWINGS ST008 THRU ST012.
4. FOR ADDITIONAL DIMENSIONS SEE DRAWINGS ST014 THRU ST016.
5. FOR LEGEND, SEE DRAWING ST001.
6. FOR ALLEGHENY STATION FOUNDATION DETAILS, SEE DRAWINGS FD101 THRU FD105.

Gannett Fleming

GANNETT FLEMING, INC.
601 Holiday Drive
Foster Plaza III
Suite 200
Pittsburgh, PA. 15220

NO.	DATE	DESCRIPTION
1	4-16-08	ADDENDUM 1 - DRAWING MODIFIED

REVISIONS

THE PREPARATION OF THIS DOCUMENT HAS BEEN FINANCED IN PART THROUGH A GRANT FROM THE FEDERAL TRANSIT ADMINISTRATION, U.S. DEPARTMENT OF TRANSPORTATION, UNDER THE URBAN MASS TRANSPORTATION ACT OF 1964, AS AMENDED. FOR THE PORT AUTHORITY OF ALLEGHENY COUNTY, PENNSYLVANIA.

COMMONWEALTH OF PENNSYLVANIA REGISTERED PROFESSIONAL THOMAS G. LEECH 102183 REGISTERED PROFESSIONAL ENGINEER
SIGNATURE

DMJM HARRIS | AECOM
FOUR GATEWAY CENTER
20TH FLOOR
PITTSBURGH, PA. 15222
APPROVED — DATE 3/10/08

DESIGNED	CTV
DRAWN	JWM - EPV
CHECKED	CTV
IN CHARGE	TGL
DATE	3/10/08
SCALE	AS SHOWN

PORT AUTHORITY OF ALLEGHENY COUNTY
PITTSBURGH PENNSYLVANIA

NORTH SHORE CONNECTOR
AERIAL STRUCTURE, RETAINED FILL, DEMOLITION OF MILLER PRINTING
GENERAL PLAN & ELEVATION
STA. 6079+50 TO STA. 6084+00 LEFT TRACK

Port Authority

CONTRACT NO. NSC-007
DWG. NO. ST003 SHT. 136

/cmg st003.dgn 4/15/2008 10:46:45 AM

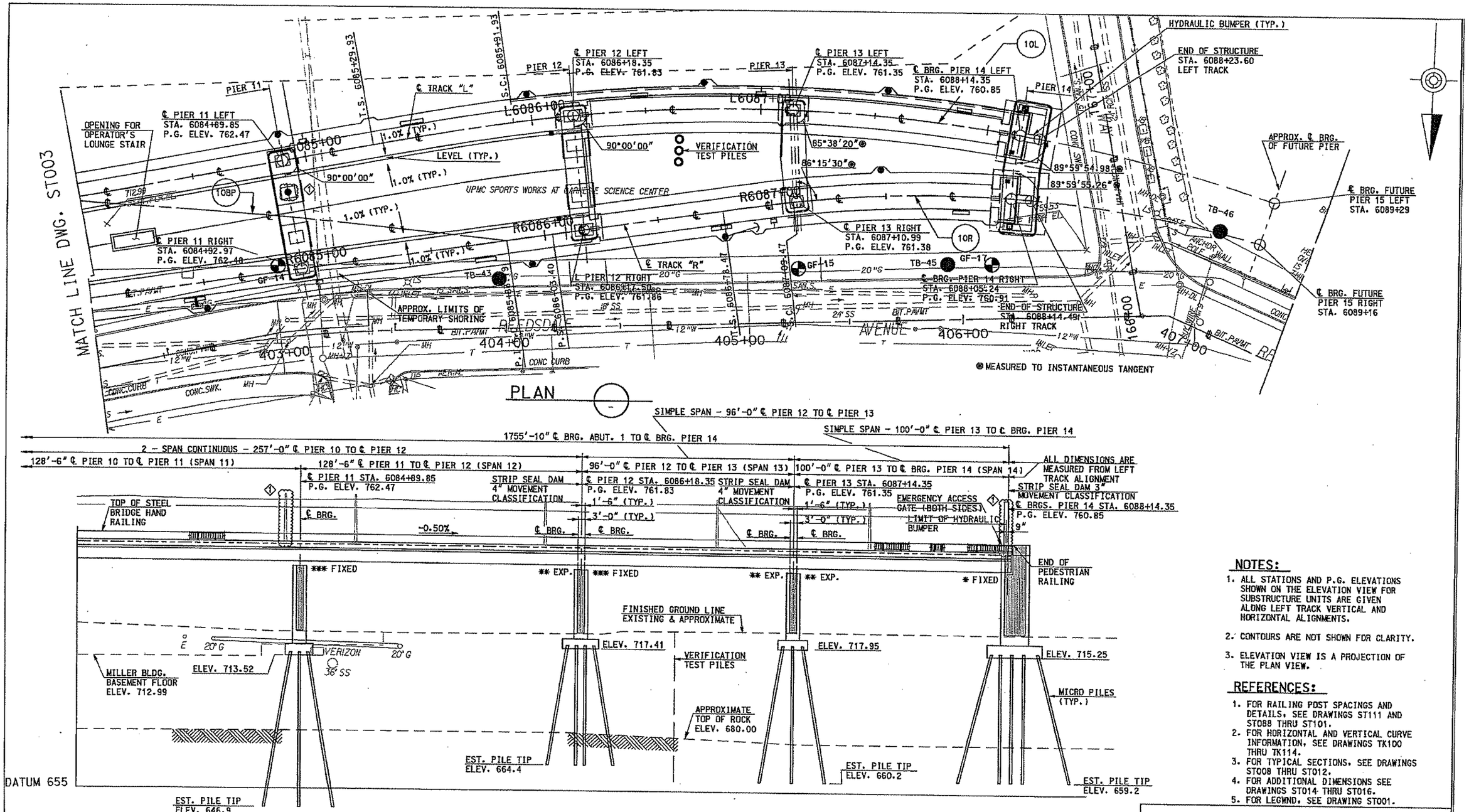

NOTES:

1. ALL STATIONS AND P.G. ELEVATIONS SHOWN ON THE ELEVATION VIEW FOR SUBSTRUCTURE UNITS ARE GIVEN ALONG LEFT TRACK VERTICAL AND HORIZONTAL ALIGNMENTS.
2. CONTOURS ARE NOT SHOWN FOR CLARITY.
3. ELEVATION VIEW IS A PROJECTION OF THE PLAN VIEW.

REFERENCES:

1. FOR RAILING POST SPACINGS AND DETAILS, SEE DRAWINGS ST111 AND ST088 THRU ST101.
2. FOR HORIZONTAL AND VERTICAL CURVE INFORMATION, SEE DRAWINGS TK100 THRU TK114.
3. FOR TYPICAL SECTIONS, SEE DRAWINGS ST008 THRU ST012.
4. FOR ADDITIONAL DIMENSIONS SEE DRAWINGS ST014 THRU ST016.
5. FOR LEGWND, SEE DRAWING ST001.

Gannett Fleming

GANNETT FLEMING, INC.
601 Holiday Drive
Foster Plaza III
Suite 200
Pittsburgh, PA. 15220

NO.	DATE	DESCRIPTION
1	4-16-08	ADDENDUM 1 - DRAWING MODIFIED

REVISIONS

THE PREPARATION OF THIS DOCUMENT HAS BEEN FINANCED IN PART THROUGH A GRANT FROM THE FEDERAL TRANSIT ADMINISTRATION, U.S. DEPARTMENT OF TRANSPORTATION, UNDER THE URBAN MASS TRANSPORTATION ACT OF 1964, AS AMENDED, FOR THE PORT AUTHORITY OF ALLEGHENY COUNTY, PENNSYLVANIA.

COMMONWEALTH OF PENNSYLVANIA REGISTERED PROFESSIONAL THOMAS G. LEECH
SIGNATURE

DMJM HARRIS | AECOM
FOUR GATEWAY CENTER
20TH FLOOR
PITTSBURGH, PA. 15222

APPROVED 3/10/08 DATE

DESIGNED	CTV
DRAWN	JWM - EPV
CHECKED	CTV
IN CHARGE	TGL
DATE	3/10/08
SCALE	AS SHOWN

PORT AUTHORITY OF ALLEGHENY COUNTY
PITTSBURGH PENNSYLVANIA

NORTH SHORE CONNECTOR
AERIAL STRUCTURE, RETAINED FILL, DEMOLITION OF MILLER PRINTING
GENERAL PLAN & ELEVATION
STA. 6084+00 TO STA. 6088+22.60 LEFT TRACK

Port Authority

CONTRACT NO.	NSC-007		
DWG. NO.	ST004	SHT.	137

/cgw st004.dgn 4/15/2008 10:46:47 AM

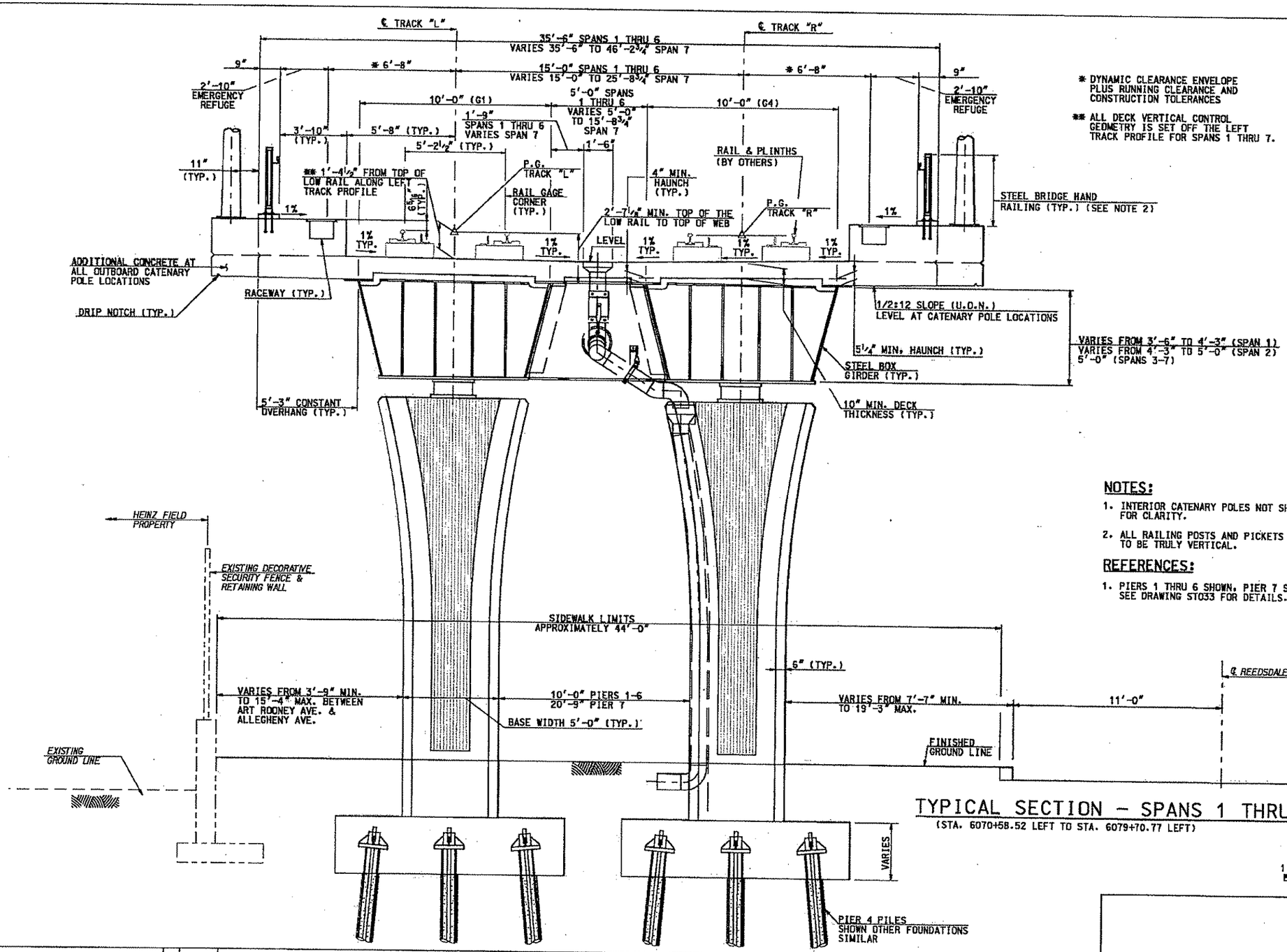

* DYNAMIC CLEARANCE ENVELOPE PLUS RUNNING CLEARANCE AND CONSTRUCTION TOLERANCES

** ALL DECK VERTICAL CONTROL GEOMETRY IS SET OFF THE LEFT TRACK PROFILE FOR SPANS 1 THRU 7.

NOTES:

1. INTERIOR CATENARY POLES NOT SHOWN FOR CLARITY.
2. ALL RAILING POSTS AND PICKETS ARE TO BE TRULY VERTICAL.

REFERENCES:

1. PIERS 1 THRU 6 SHOWN. PIER 7 SIMILAR. SEE DRAWING ST033 FOR DETAILS.

TYPICAL SECTION - SPANS 1 THRU 7

(STA. 6070+58.52 LEFT TO STA. 6079+70.77 LEFT)

1' 0 2' 4' 7'
⅜" = 1'-0"

Gannett Fleming

GANNETT FLEMING, INC.
601 Holiday Drive
Foster Plaza III
Suite 200
Pittsburgh, PA. 15220

NO.	DATE	DESCRIPTION

REVISIONS

THE PREPARATION OF THIS DOCUMENT HAS BEEN FINANCED IN PART THROUGH A GRANT FROM THE FEDERAL TRANSIT ADMINISTRATION, U.S. DEPARTMENT OF TRANSPORTATION, UNDER THE URBAN MASS TRANSPORTATION ACT OF 1964, AS AMENDED, FOR THE PORT AUTHORITY OF ALLEGHENY COUNTY, PENNSYLVANIA.

COMMONWEALTH OF PENNSYLVANIA REGISTERED PROFESSIONAL ENGINEER THOMAS G. LEECH 021853

SIGNATURE

DMJM HARRIS | AECOM
FOUR GATEWAY CENTER
20TH FLOOR
PITTSBURGH, PA. 15222

APPROVED 3/10/08 DATE

DESIGNED	CTV
DRAWN	JWM - EPV
CHECKED	CTV
IN CHARGE	TGL
DATE	3/10/08
SCALE	AS SHOWN

PORT AUTHORITY OF ALLEGHENY COUNTY
PITTSBURGH PENNSYLVANIA

NORTH SHORE CONNECTOR
AERIAL STRUCTURE, RETAINED FILL, DEMOLITION OF MILLER PRINTING
TYPICAL SECTIONS
SHEET 1 OF 5

Port Authority

CONTRACT NO.	NSC-007		
DWG. NO.	ST008	SHT.	142

#TIME# #DATE# #FILE#

(final/cmv/aerial/cmv st008.dgn 3/7/2008 6:01:23 PM

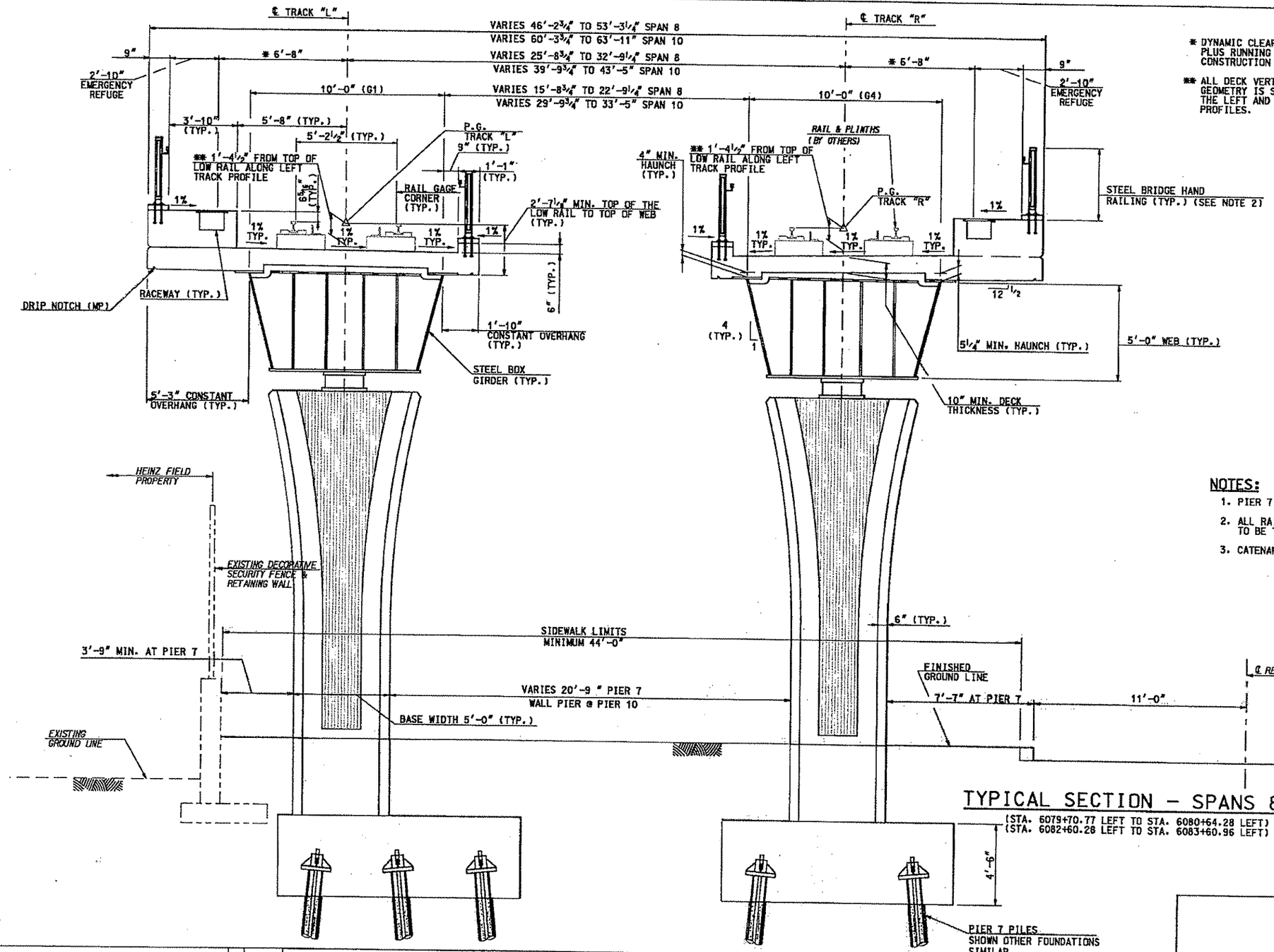

* DYNAMIC CLEARANCE ENVELOPE PLUS RUNNING CLEARANCE AND CONSTRUCTION TOLERANCES.

** ALL DECK VERTICAL CONTROL GEOMETRY IS SET FROM BOTH THE LEFT AND RIGHT TRACK PROFILES.

NOTES:

1. PIER 7 SHOWN.
2. ALL RAILING POSTS AND PICKETS ARE TO BE TRULY VERTICAL.
3. CATENARY POLES NOT SHOWN FOR CLARITY.

TYPICAL SECTION - SPANS 8 & 10

(STA. 6079+70.77 LEFT TO STA. 6080+64.28 LEFT)
(STA. 6082+60.28 LEFT TO STA. 6083+60.96 LEFT)

1' 0 2' 4' 7'
⅜" = 1'-0"

Gannett Fleming

GANNETT FLEMING, INC.
601 Holiday Drive
Foster Plaza III
Suite 200
Pittsburgh, PA. 15220

NO.	DATE	DESCRIPTION

REVISIONS

THE PREPARATION OF THIS DOCUMENT HAS BEEN FINANCED IN PART THROUGH A GRANT FROM THE FEDERAL TRANSIT ADMINISTRATION, U.S. DEPARTMENT OF TRANSPORTATION, UNDER THE URBAN MASS TRANSPORTATION ACT OF 1964, AS AMENDED, FOR THE PORT AUTHORITY OF ALLEGHENY COUNTY, PENNSYLVANIA.

COMMONWEALTH OF PENNSYLVANIA REGISTERED PROFESSIONAL THOMAS G. LEECH

SIGNATURE

DMJM HARRIS | AECOM
FOUR GATEWAY CENTER
20TH FLOOR
PITTSBURGH, PA. 15222

APPROVED 3/10/08 DATE

DESIGNED	CTV
DRAWN	JWM - EPV
CHECKED	CTV
IN CHARGE	TGL
DATE	3/10/08
SCALE	AS SHOWN

PORT AUTHORITY OF ALLEGHENY COUNTY
PITTSBURGH PENNSYLVANIA

NORTH SHORE CONNECTOR
AERIAL STRUCTURE, RETAINED FILL, DEMOLITION OF MILLER PRINTING
TYPICAL SECTIONS
SHEET 2 OF 5

Port Authority

CONTRACT NO. NSC-007
DWG. NO. ST009 SHT. 143

/final/gw/aerial/gw_st009.dgn 3/7/2008 6:01:32 AM

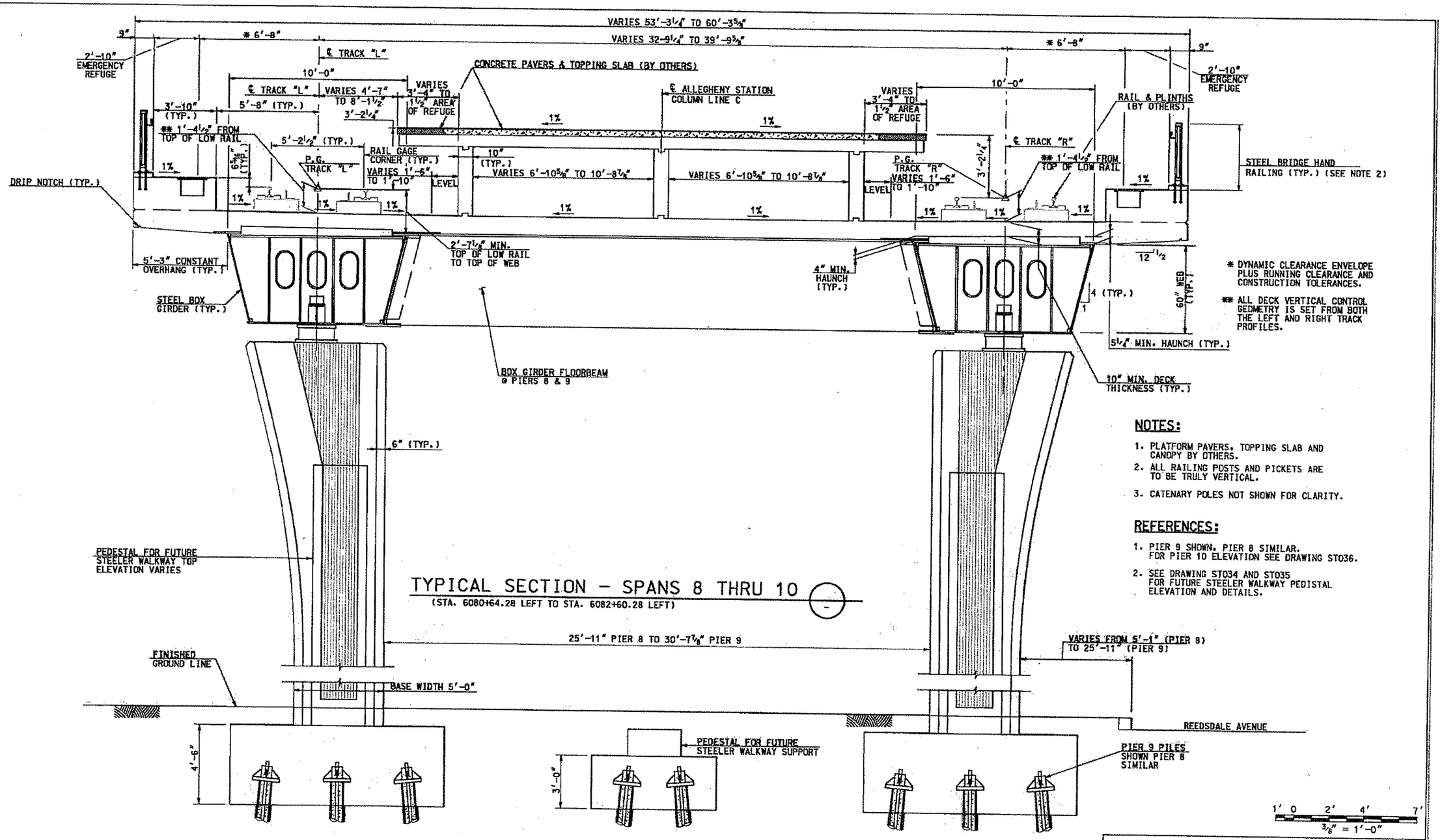

* DYNAMIC CLEARANCE ENVELOPE PLUS RUNNING CLEARANCE AND CONSTRUCTION TOLERANCES.

** ALL DECK VERTICAL CONTROL GEOMETRY IS SET FROM BOTH THE LEFT AND RIGHT TRACK PROFILES.

NOTES:

1. PLATFORM PAVERS, TOPPING SLAB AND CANOPY BY OTHERS.
2. ALL RAILING POSTS AND PICKETS ARE TO BE TRULY VERTICAL.
3. CATENARY POLES NOT SHOWN FOR CLARITY.

REFERENCES:

1. PIER 9 SHOWN, PIER 8 SIMILAR. FOR PIER 10 ELEVATION SEE DRAWING ST036.
2. SEE DRAWING ST034 AND ST035 FOR FUTURE STEELER WALKWAY PEDISTAL ELEVATION AND DETAILS.

Gannett Fleming

GANNETT FLEMING, INC.
501 Holiday Drive
Foster Plaza III
Suite 200
Pittsburgh, PA. 15220

NO.	DATE	DESCRIPTION

REVISIONS

THE PREPARATION OF THIS DOCUMENT HAS BEEN FINANCED IN PART THROUGH A GRANT FROM THE FEDERAL TRANSIT ADMINISTRATION, U.S. DEPARTMENT OF TRANSPORTATION, UNDER THE URBAN MASS TRANSPORTATION ACT OF 1964, AS AMENDED, FOR THE PORT AUTHORITY OF ALLEGHENY COUNTY, PENNSYLVANIA.

COMMONWEALTH OF PENNSYLVANIA REGISTERED PROFESSIONAL ENGINEER THOMAS G. LEECH 021835

SIGNATURE

DMJM HARRIS | AECOM
FOUR GATEWAY CENTER
20TH FLOOR
PITTSBURGH, PA. 15222

APPROVED — DATE 3/10/08

DESIGNED	CTV
DRAWN	JWM - EPV
CHECKED	CTV
IN CHARGE	TGL
DATE	3/10/08
SCALE	AS SHOWN

PORT AUTHORITY OF ALLEGHENY COUNTY
PITTSBURGH PENNSYLVANIA

NORTH SHORE CONNECTOR
AERIAL STRUCTURE, RETAINED FILL, DEMOLITION OF MILLER PRINTING
TYPICAL SECTIONS
SHEET 3 OF 5

Port Authority

CONTRACT NO. NSC-007
DWG. NO. ST010 SHT. 144

/final/cgw/aerial/cgw st010.dgn 3/7/2008 6:01:42 AM

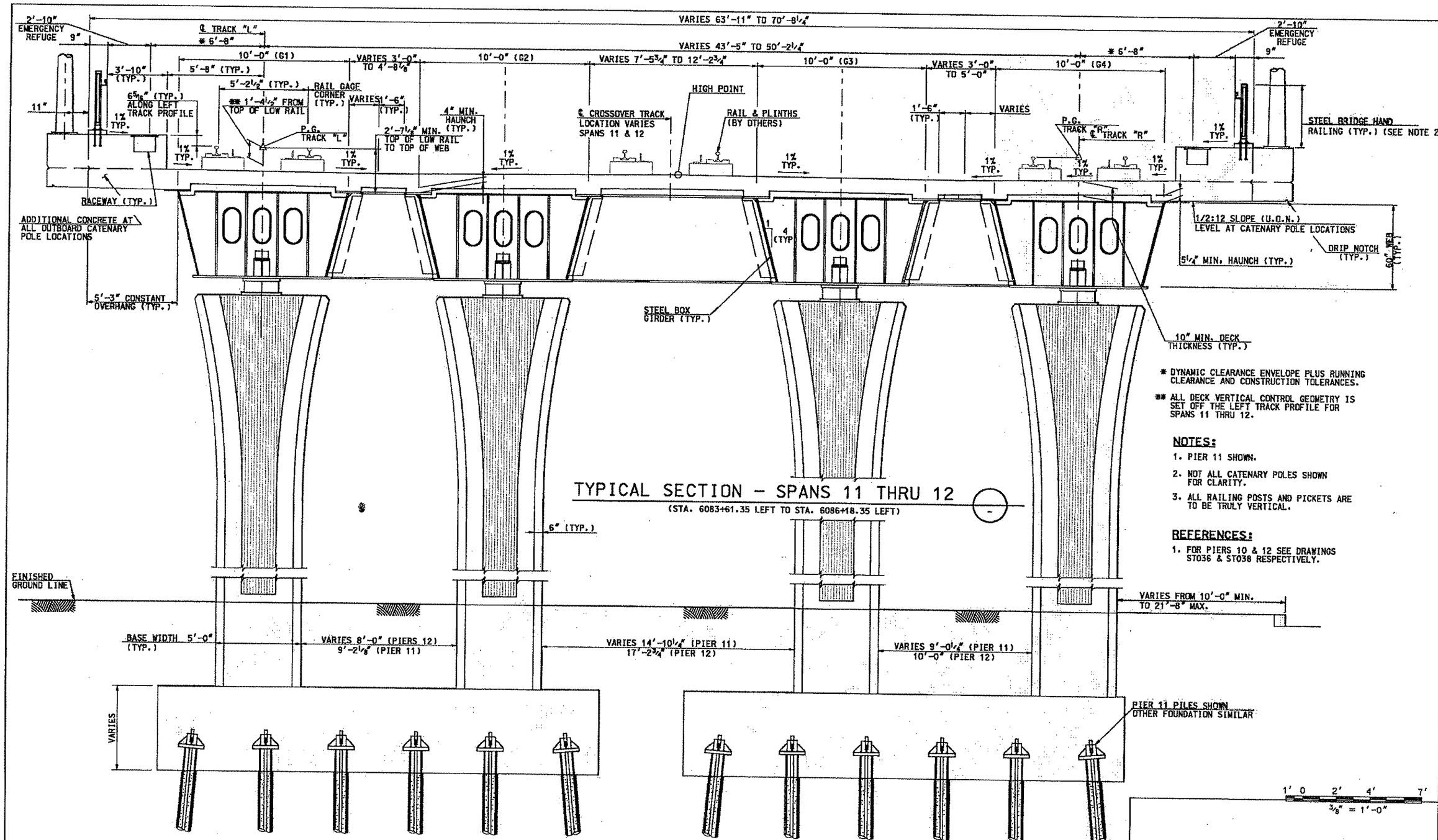

TYPICAL SECTION - SPANS 11 THRU 12

(STA. 6083+61.35 LEFT TO STA. 6086+18.35 LEFT)

* DYNAMIC CLEARANCE ENVELOPE PLUS RUNNING CLEARANCE AND CONSTRUCTION TOLERANCES.

** ALL DECK VERTICAL CONTROL GEOMETRY IS SET OFF THE LEFT TRACK PROFILE FOR SPANS 11 THRU 12.

NOTES:

1. PIER 11 SHOWN.
2. NOT ALL CATENARY POLES SHOWN FOR CLARITY.
3. ALL RAILING POSTS AND PICKETS ARE TO BE TRULY VERTICAL.

REFERENCES:

1. FOR PIERS 10 & 12 SEE DRAWINGS ST036 & ST038 RESPECTIVELY.

Gannett Fleming

GANNETT FLEMING, INC.
601 Holiday Drive
Foster Plaza III
Suite 200
Pittsburgh, PA. 15220

NO.	DATE	DESCRIPTION

REVISIONS

THE PREPARATION OF THIS DOCUMENT HAS BEEN FINANCED IN PART THROUGH A GRANT FROM THE FEDERAL TRANSIT ADMINISTRATION, U.S. DEPARTMENT OF TRANSPORTATION, UNDER THE URBAN MASS TRANSPORTATION ACT OF 1964, AS AMENDED, FOR THE PORT AUTHORITY OF ALLEGHENY COUNTY, PENNSYLVANIA.

COMMONWEALTH OF PENNSYLVANIA REGISTERED PROFESSIONAL ENGINEER THOMAS G. LEECH 022163

SIGNATURE

DMJM HARRIS | AECOM
FOUR GATEWAY CENTER
20TH FLOOR
PITTSBURGH, PA. 15222

APPROVED — DATE 3/10/08

DESIGNED	CTV
DRAWN	JWM - EPV
CHECKED	CTV
IN CHARGE	TGL
DATE	3/10/08
SCALE	AS SHOWN

PORT AUTHORITY OF ALLEGHENY COUNTY
PITTSBURGH PENNSYLVANIA

NORTH SHORE CONNECTOR
AERIAL STRUCTURE, RETAINED FILL, DEMOLITION OF MILLER PRINTING
TYPICAL SECTIONS
SHEET 4 OF 5

Port Authority

CONTRACT NO.	NSC-007
DWG. NO.	ST011
SHT.	145

#DATE# #TIME#
#FILE#

/final/cgw/aerial/cgw st011.dgn 3/7/2008 6:01:51 PM

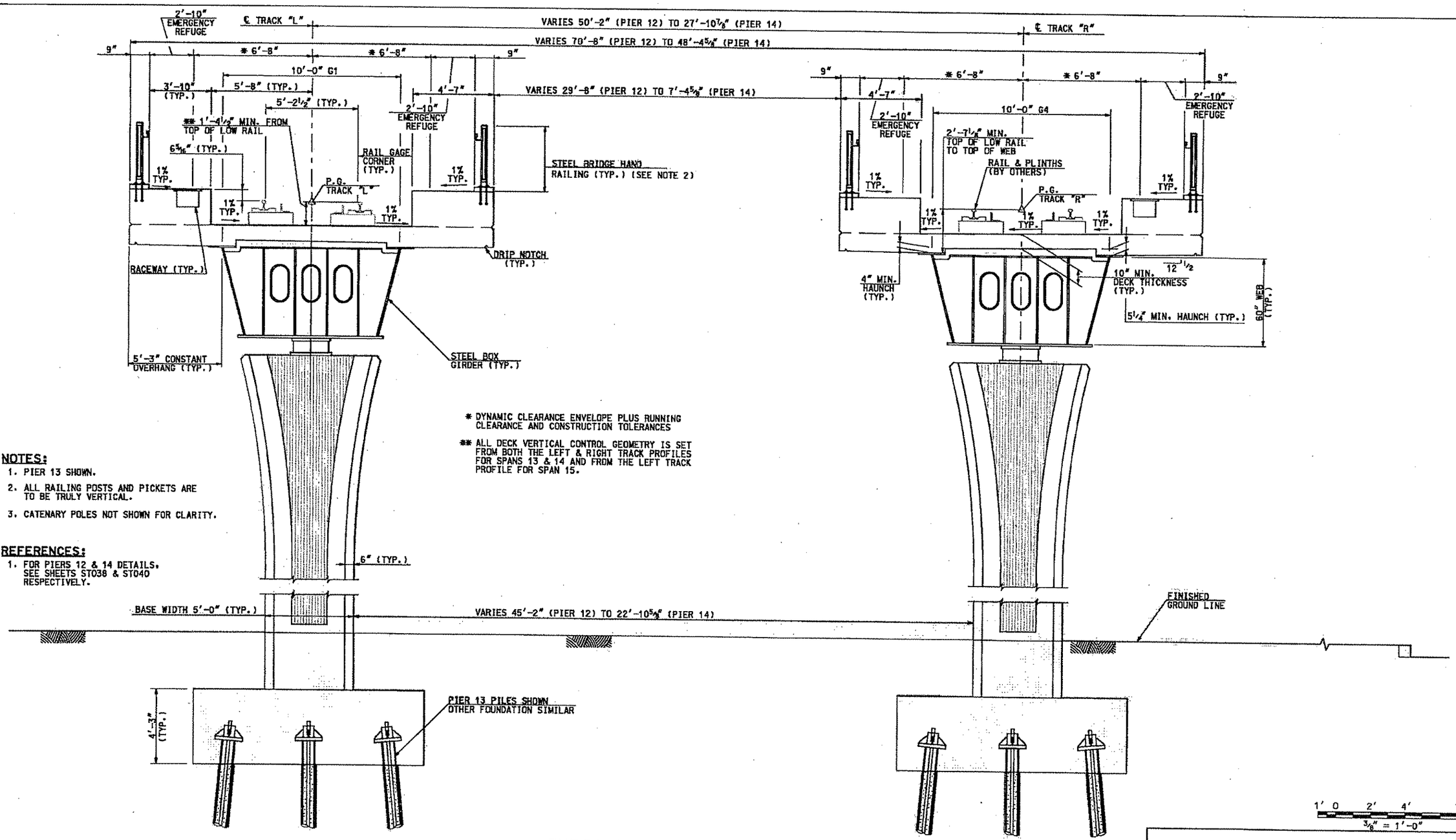

* DYNAMIC CLEARANCE ENVELOPE PLUS RUNNING CLEARANCE AND CONSTRUCTION TOLERANCES

** ALL DECK VERTICAL CONTROL GEOMETRY IS SET FROM BOTH THE LEFT & RIGHT TRACK PROFILES FOR SPANS 13 & 14 AND FROM THE LEFT TRACK PROFILE FOR SPAN 15.

NOTES:

1. PIER 13 SHOWN.
2. ALL RAILING POSTS AND PICKETS ARE TO BE TRULY VERTICAL.
3. CATENARY POLES NOT SHOWN FOR CLARITY.

REFERENCES:

1. FOR PIERS 12 & 14 DETAILS, SEE SHEETS ST038 & ST040 RESPECTIVELY.

TYPICAL SECTION – SPANS 13 AND 14

(STA. 6086+18.35 LEFT TO STA. 6088+22.60 LEFT)

Gannett Fleming

GANNETT FLEMING, INC.
601 Holiday Drive
Foster Plaza III
Suite 200
Pittsburgh, PA. 15220

NO.	DATE	DESCRIPTION

REVISIONS

THE PREPARATION OF THIS DOCUMENT HAS BEEN FINANCED IN PART THROUGH A GRANT FROM THE FEDERAL TRANSIT ADMINISTRATION, U.S. DEPARTMENT OF TRANSPORTATION, UNDER THE URBAN MASS TRANSPORTATION ACT OF 1964, AS AMENDED. FOR THE PORT AUTHORITY OF ALLEGHENY COUNTY, PENNSYLVANIA.

COMMONWEALTH OF PENNSYLVANIA REGISTERED PROFESSIONAL THOMAS G. LEECH 022153 ENGINEER

SIGNATURE

DMJM HARRIS | AECOM

FOUR GATEWAY CENTER
20TH FLOOR
PITTSBURGH, PA. 15222

APPROVED — DATE 3/10/08

DESIGNED	CTV
DRAWN	JWM – EPV
CHECKED	CTV
IN CHARGE	TGL
DATE	3/10/08
SCALE	AS SHOWN

PORT AUTHORITY OF ALLEGHENY COUNTY
PITTSBURGH PENNSYLVANIA

NORTH SHORE CONNECTOR
AERIAL STRUCTURE, RETAINED FILL, DEMOLITION OF MILLER PRINTING
TYPICAL SECTIONS
SHEET 5 OF 5

Port Authority

CONTRACT NO.	NSC-007		
DWG. NO.	ST012	SHT.	146

/final/cmw/aerial/cmw st012.dgn 3/7/2008 6:02:05 AM

#DATE# #TIME#
#FILE#

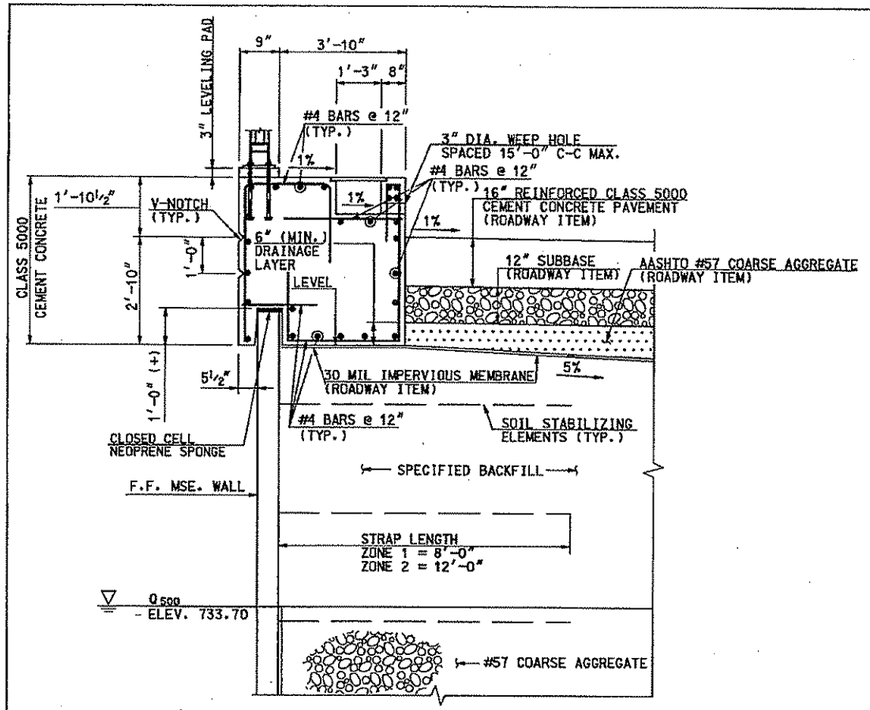

DETAIL 1 (ST024)
N.T.S.

MSE COMPONENT ITEM BREAKDOWN

ITEM NO. / UNIT	INFORMAL QUANITY & UNIT	DESCRIPTION	WALL A	WALL B
03416.001 / SF	MECHANICALLY STABILIZED EARTH, WINGWALLS			
	1184 CY	EXCAVATION, CLASS 3	592	592
	2980 SF	PRECAST PANELS	1490	1490
	6 CY	CLASS A CEMENT CONCRETE LEVELING PADS	3	3
	204 SF	CLOSED CELL NEOPRENE SPONGE	102	102
	132 CY	SPECIFIED BACKFILL	66	66
	1426 CY	NO. 57 COARSE AGGREGATE	713	713
	13,286 SF	GEOTEXTILE FABRIC, CLASS A, TYPE 2	6643	6643
	442 CY	CLASS 5000 CEMENT CONCRETE	221	221
	45,986 LBS	REINFORCEMENT BARS (FOR SIDEWALK CAP)	22,993	22,993
	72 SF	1" DIELECTRIC SHEET	36	36
	3,600 SF	PENETRATING SEALER	1,800	1,800

1

NOTES:

1. CONTRACTOR TO PROVIDE PROTECTION OF EXPOSED ANCHOR BOLTS DURING CONSTRUCTION.

REFERENCES:

1. FOR ANCHOR PLATE DETAIL, SEE DWG. ST106.

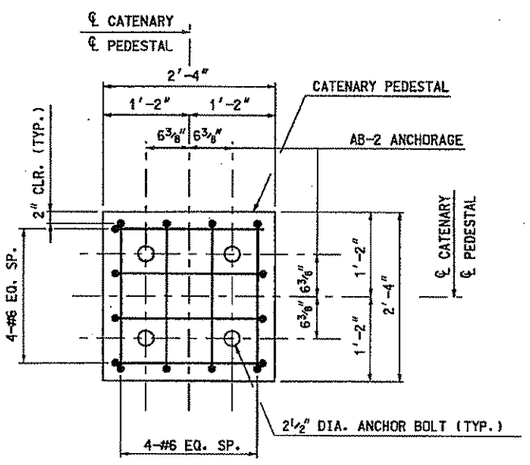

VIEW C
N.T.S.

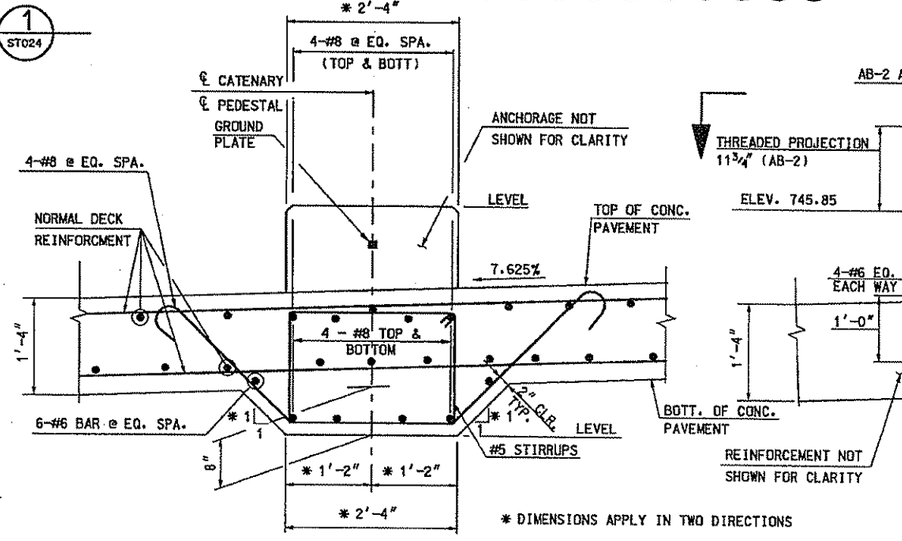

DETAIL 3
REINFORCEMENT
N.T.S.

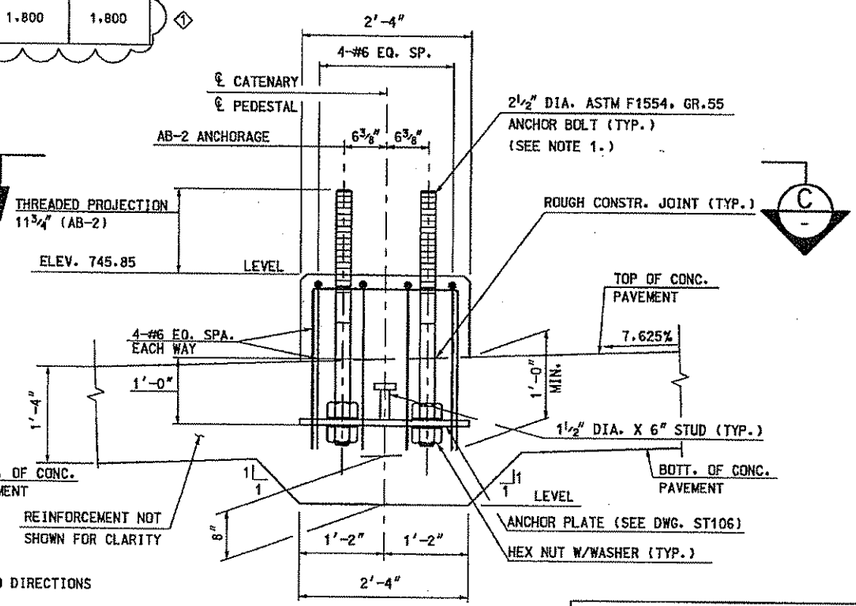

DETAIL 2
ANCHORAGE
N.T.S.

Gannett Fleming

GANNETT FLEMING, INC.
601 Holiday Drive
Foster Plaza III
Suite 200
Pittsburgh, PA. 15220

NO.	DATE	DESCRIPTION
1	4-16-08	ADDENDUM 1 - DRAWING MODIFIED

REVISIONS

THE PREPARATION OF THIS DOCUMENT HAS BEEN FINANCED IN PART THROUGH A GRANT FROM THE FEDERAL TRANSIT ADMINISTRATION, U.S. DEPARTMENT OF TRANSPORTATION, UNDER THE URBAN MASS TRANSPORTATION ACT OF 1964, AS AMENDED, FOR THE PORT AUTHORITY OF ALLEGHENY COUNTY, PENNSYLVANIA.

COMMONWEALTH OF PENNSYLVANIA REGISTERED PROFESSIONAL ENGINEER THOMAS G. LEECH 021863 GYLE
SIGNATURE

DMJM HARRIS | AECOM
FOUR GATEWAY CENTER
20TH FLOOR
PITTSBURGH, PA. 15222

APPROVED — DATE 3/10/08

DESIGNED	JDM
DRAWN	JWM - EPV
CHECKED	CTV
IN CHARGE	TGL
DATE	3/10/08
SCALE	AS SHOWN

PORT AUTHORITY OF ALLEGHENY COUNTY
PITTSBURGH PENNSYLVANIA

NORTH SHORE CONNECTOR
AERIAL STRUCTURE, RETAINED FILL, DEMOLITION OF MILLER PRINTING
RETAINED FILL SECTION
MSE WALL DETAILS 3

Port Authority

CONTRACT NO. NSC-007
DWG. NO. ST025 SHT. 160

#DATE# #TIME#
#FILE#

/cmd st025.dgn 4/15/2008 10:46:51 AM

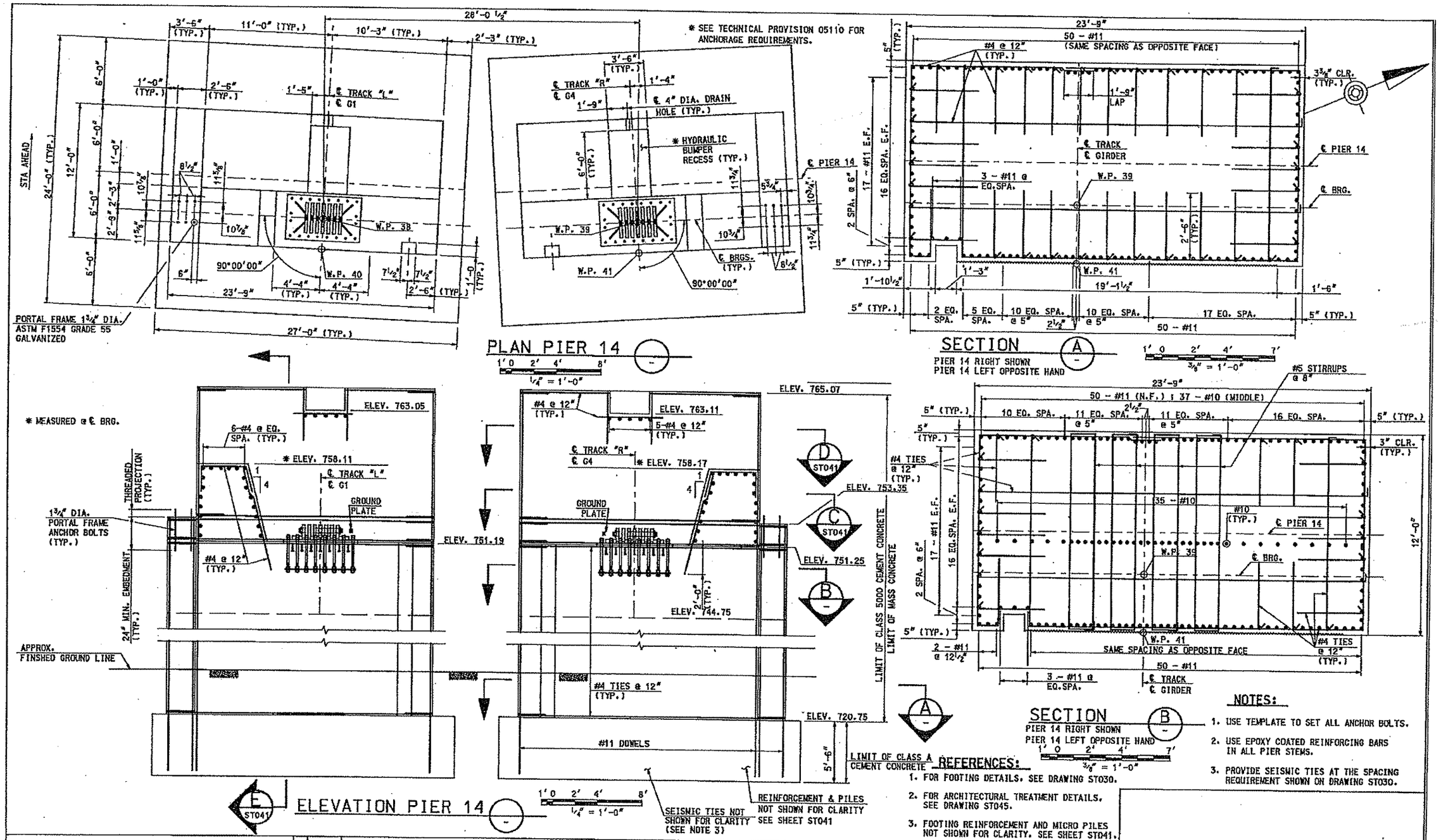

NOTES:

1. USE TEMPLATE TO SET ALL ANCHOR BOLTS.
2. USE EPOXY COATED REINFORCING BARS IN ALL PIER STEMS.
3. PROVIDE SEISMIC TIES AT THE SPACING REQUIREMENT SHOWN ON DRAWING ST030.

REFERENCES:

1. FOR FOOTING DETAILS, SEE DRAWING ST030.
2. FOR ARCHITECTURAL TREATMENT DETAILS, SEE DRAWING ST045.
3. FOOTING REINFORCEMENT AND MICRO PILES NOT SHOWN FOR CLARITY. SEE SHEET ST041.

Gannett Fleming
GANNETT FLEMING, INC.
601 Holiday Drive
Foster Plaza III
Suite 200
Pittsburgh, PA. 15220

NO.	DATE	DESCRIPTION

REVISIONS

THE PREPARATION OF THIS DOCUMENT HAS BEEN FINANCED IN PART THROUGH A GRANT FROM THE FEDERAL TRANSIT ADMINISTRATION, U.S. DEPARTMENT OF TRANSPORTATION, UNDER THE URBAN MASS TRANSPORTATION ACT OF 1964, AS AMENDED, FOR THE PORT AUTHORITY OF ALLEGHENY COUNTY, PENNSYLVANIA.

THOMAS G. LEECH
SIGNATURE

DMJM HARRIS | AECOM
FOUR GATEWAY CENTER
20TH FLOOR
PITTSBURGH, PA. 15222
APPROVED 3/10/08 DATE

DESIGNED	TGL
DRAWN	JWW - EPV
CHECKED	CTV
IN CHARGE	TGL
DATE	3/10/08
SCALE	AS SHOWN

PORT AUTHORITY OF ALLEGHENY COUNTY
PITTSBURGH PENNSYLVANIA

NORTH SHORE CONNECTOR
AERIAL STRUCTURE, RETAINED FILL, DEMOLITION OF MILLER PRINTING
PIER PLAN & ELEVATION
PIER 14

Port Authority

CONTRACT NO. NSC-007
DWG. NO. ST040 SHT. 175

/final/cw/aerial/cw st040.dgn 3/7/2008 6:07:09 AM

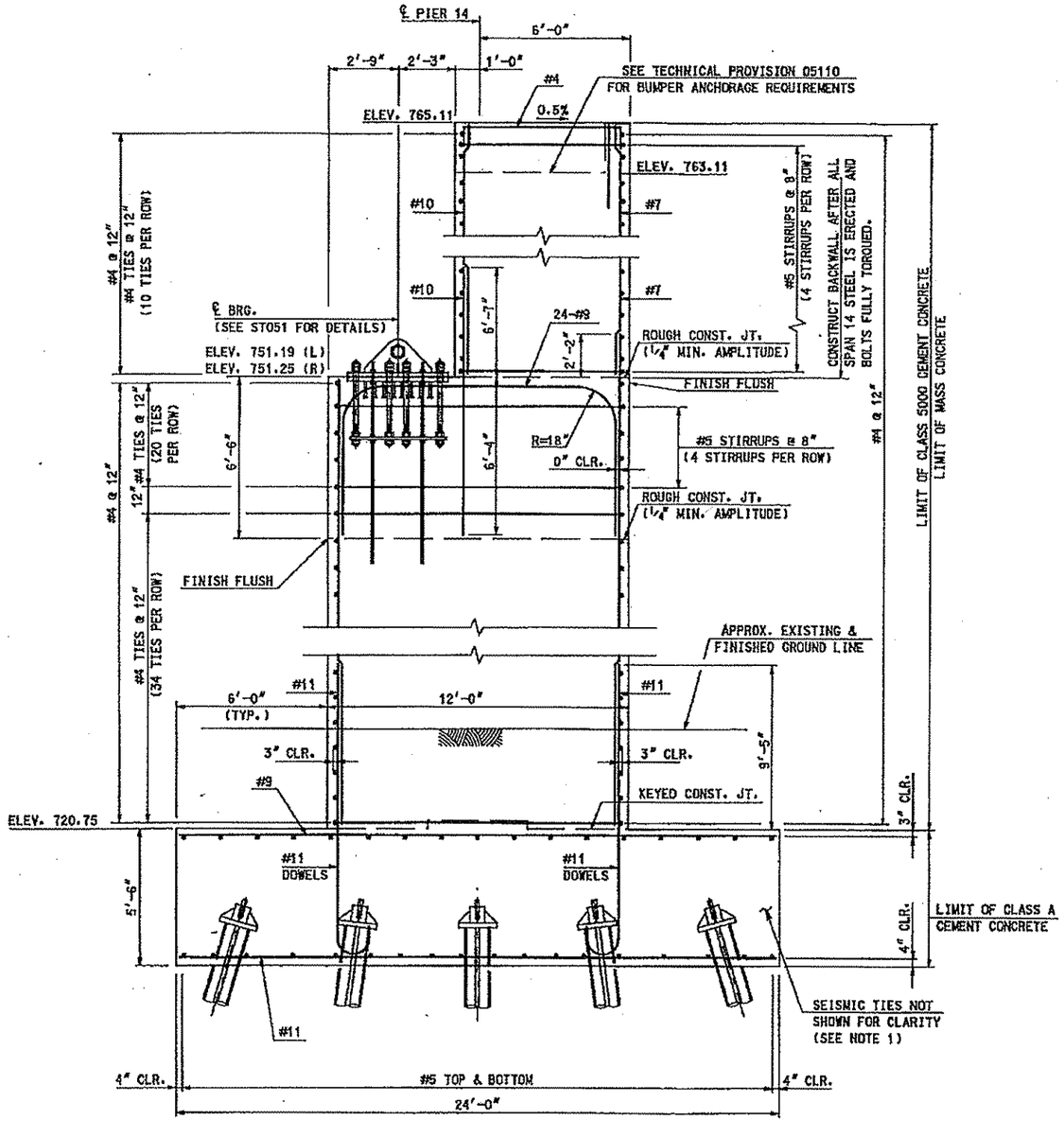

SECTION E ST040

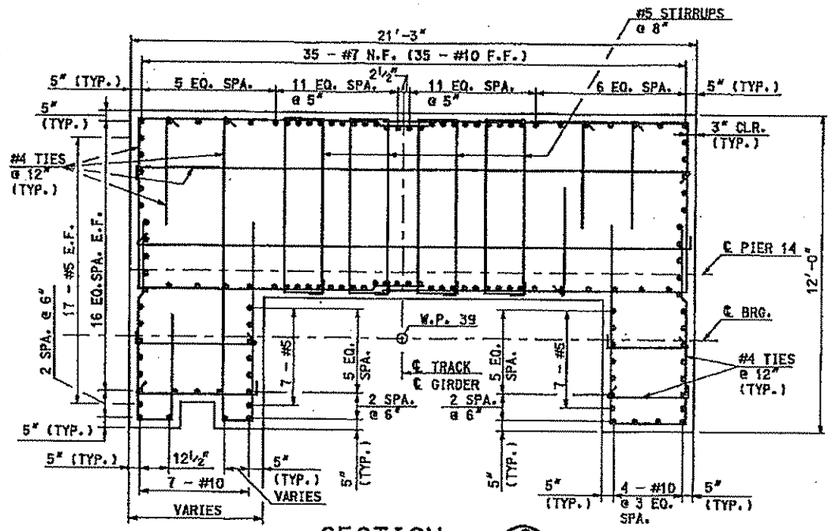

SECTION C ST040

PIER 14 LEFT SHOWN
PIER 14 RIGHT OPPOSITE HAND

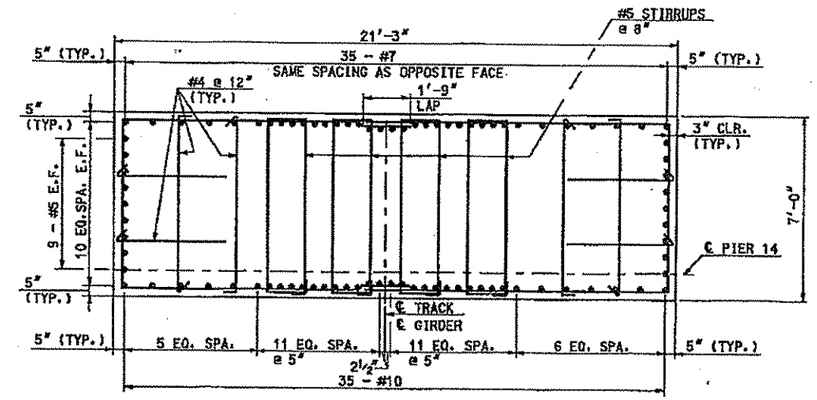

SECTION D ST040

PIER 14 LEFT SHOWN
PIER 14 RIGHT OPPOSITE HAND

1' 0 2' 4' 7'
3/8" = 1'-0"

REFERENCES:

1. FOR FOOTING DETAILS, SEE DRAWING ST030.
2. FOR ARCHITECTURAL TREATMENT DETAILS, SEE DRAWING ST045.

NOTES:

1. PROVIDE SEISMIC TIES AT THE SPACING REQUIREMENT SHOWN ON DRAWING ST030.

Gannett Fleming

GANNETT FLEMING, INC.
601 Holiday Drive
Foster Plaza III
Suite 200
Pittsburgh, PA. 15220

NO.	DATE	DESCRIPTION

REVISIONS

THE PREPARATION OF THIS DOCUMENT HAS BEEN FINANCED IN PART THROUGH A GRANT FROM THE FEDERAL TRANSIT ADMINISTRATION, U.S. DEPARTMENT OF TRANSPORTATION, UNDER THE URBAN MASS TRANSPORTATION ACT OF 1964, AS AMENDED, FOR THE PORT AUTHORITY OF ALLEGHENY COUNTY, PENNSYLVANIA.

COMMONWEALTH OF PENNSYLVANIA REGISTERED PROFESSIONAL THOMAS G. LEECH

SIGNATURE

DMJM HARRIS | AECOM
FOUR GATEWAY CENTER
20TH FLOOR
PITTSBURGH, PA. 15222

APPROVED 3/10/08 DATE

DESIGNED	TGL
DRAWN	JWM - EPV
CHECKED	CTV
IN CHARGE	TGL
DATE	3/10/08
SCALE	AS SHOWN

PORT AUTHORITY OF ALLEGHENY COUNTY
PITTSBURGH PENNSYLVANIA

NORTH SHORE CONNECTOR
AERIAL STRUCTURE, RETAINED FILL, DEMOLITION OF MILLER PRINTING
PIER PLAN & ELEVATION
PIER 14 DETAILS

Port Authority

CONTRACT NO. NSC-007
DWG. NO. ST041 SHT. 176

#DATE#
#FILE#

/final/gw/aerial/gm st041.dgn 3/7/2008 6:07:23 AM

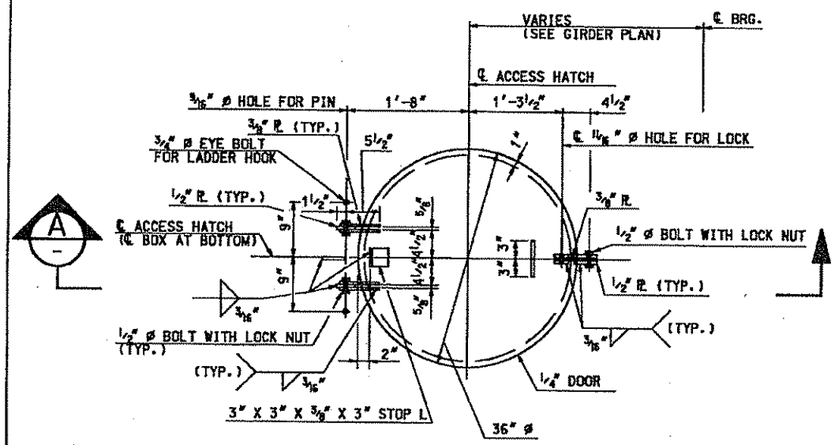

ACCESS HATCH DETAIL

1' 6" 0 1' 2'
1" = 1'-0"

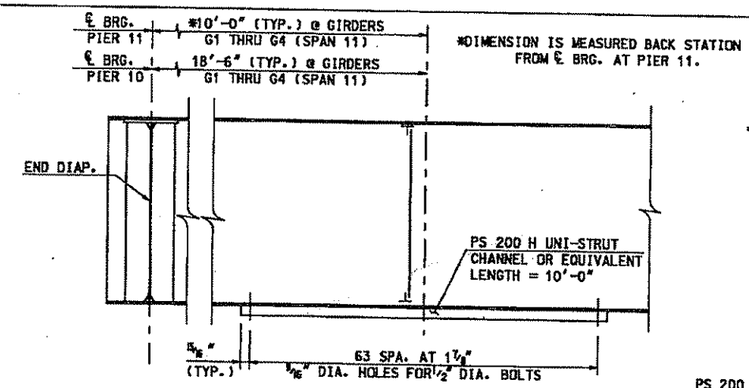

*DIMENSION IS MEASURED BACK STATION FROM ℄ BRG. AT PIER 11.

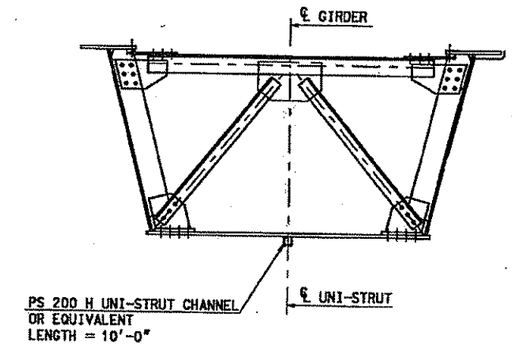

UNI-STRUT DETAILS

NSC-009 CONDUIT SUPPORT - SPAN 11 & 12
(8 REQUIRED)

1'6" 0 1' 2' 3' 4' 5'
1/2" = 1'-0"

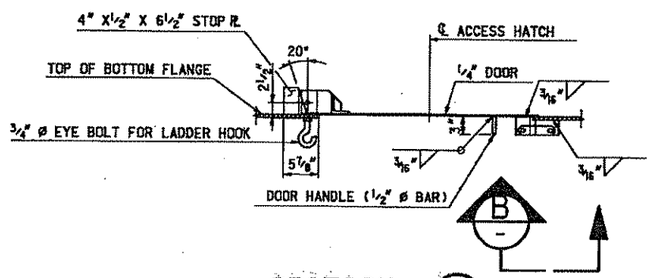

SECTION A

1' 6" 0 1' 2'
1" = 1'-0"

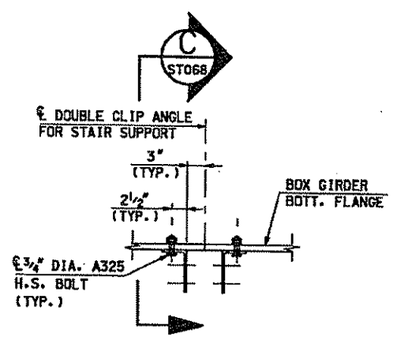

DETAIL 2 ST068

1' 6" 0 1' 2'
1" = 1'-0"

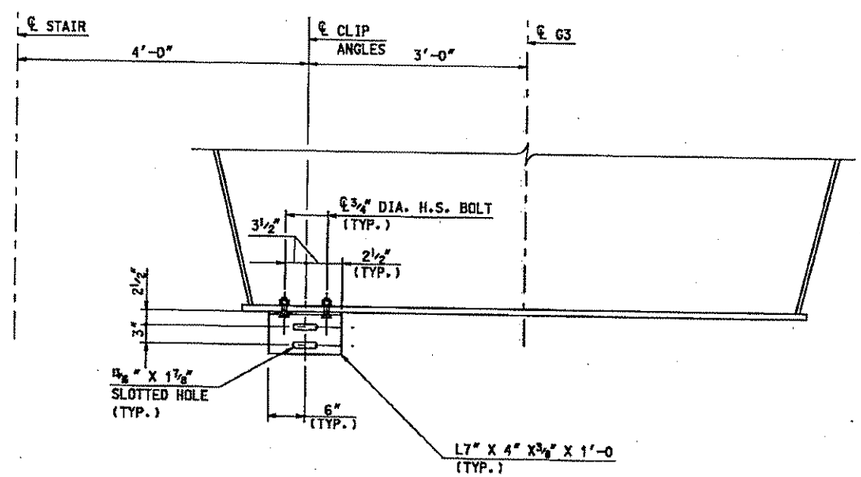

SECTION C

GIRDER 3 SHOWN
GIRDER 2 OPP. HAND

1' 6" 0 1' 2'
1" = 1'-0"

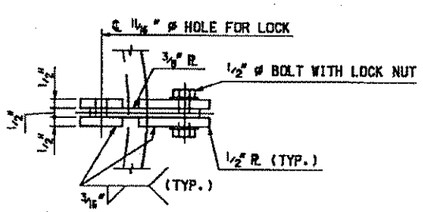

VIEW B

0 1" 2" 3" 6" 1'-0"
3" = 1'-0"

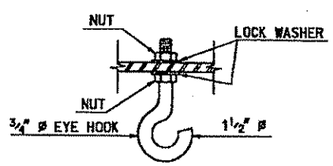

EYE HOOK DETAIL

0 1" 2" 3" 6" 1'-0"
3" = 1'-0"

NOTES:

1. FINISH: ALL EXPOSED EDGES OF PLATES AND OPENINGS SHALL BE GROUND SMOOTH.

REFERENCES:

1. FOR ACCESS HATCH LOCATIONS, SEE DRAWINGS ST061 THRU ST070.

Gannett Fleming
GANNETT FLEMING, INC.
601 Holiday Drive
Foster Plaza III
Suite 200
Pittsburgh, PA. 15220

NO.	DATE	DESCRIPTION

REVISIONS

THE PREPARATION OF THIS DOCUMENT HAS BEEN FINANCED IN PART THROUGH A GRANT FROM THE FEDERAL TRANSIT ADMINISTRATION, U.S. DEPARTMENT OF TRANSPORTATION, UNDER THE URBAN MASS TRANSPORTATION ACT OF 1964, AS AMENDED, FOR THE PORT AUTHORITY OF ALLEGHENY COUNTY, PENNSYLVANIA.

COMMONWEALTH OF PENNSYLVANIA REGISTERED PROFESSIONAL THOMAS G. LEECH 021853 E
SIGNATURE

DMJM HARRIS | AECOM
FOUR GATEWAY CENTER
20TH FLOOR
PITTSBURGH, PA. 15222
APPROVED — DATE 3/10/08

DESIGNED	MES
DRAWN	JWM - EPV
CHECKED	CTV
IN CHARGE	TGL
DATE	3/10/08
SCALE	AS SHOWN

PORT AUTHORITY OF ALLEGHENY COUNTY
PITTSBURGH PENNSYLVANIA

NORTH SHORE CONNECTOR
AERIAL STRUCTURE, RETAINED FILLED, DEMOLITION OF MILLER PRINTING
GIRDER DETAILS
MISC. STEEL DETAILS 2

Port Authority

CONTRACT NO. NSC-007
DWG. NO. ST081 SHT. 216

/final/gmr/aerial/gmr st081.dgn 3/7/2008 6:13:54 PM

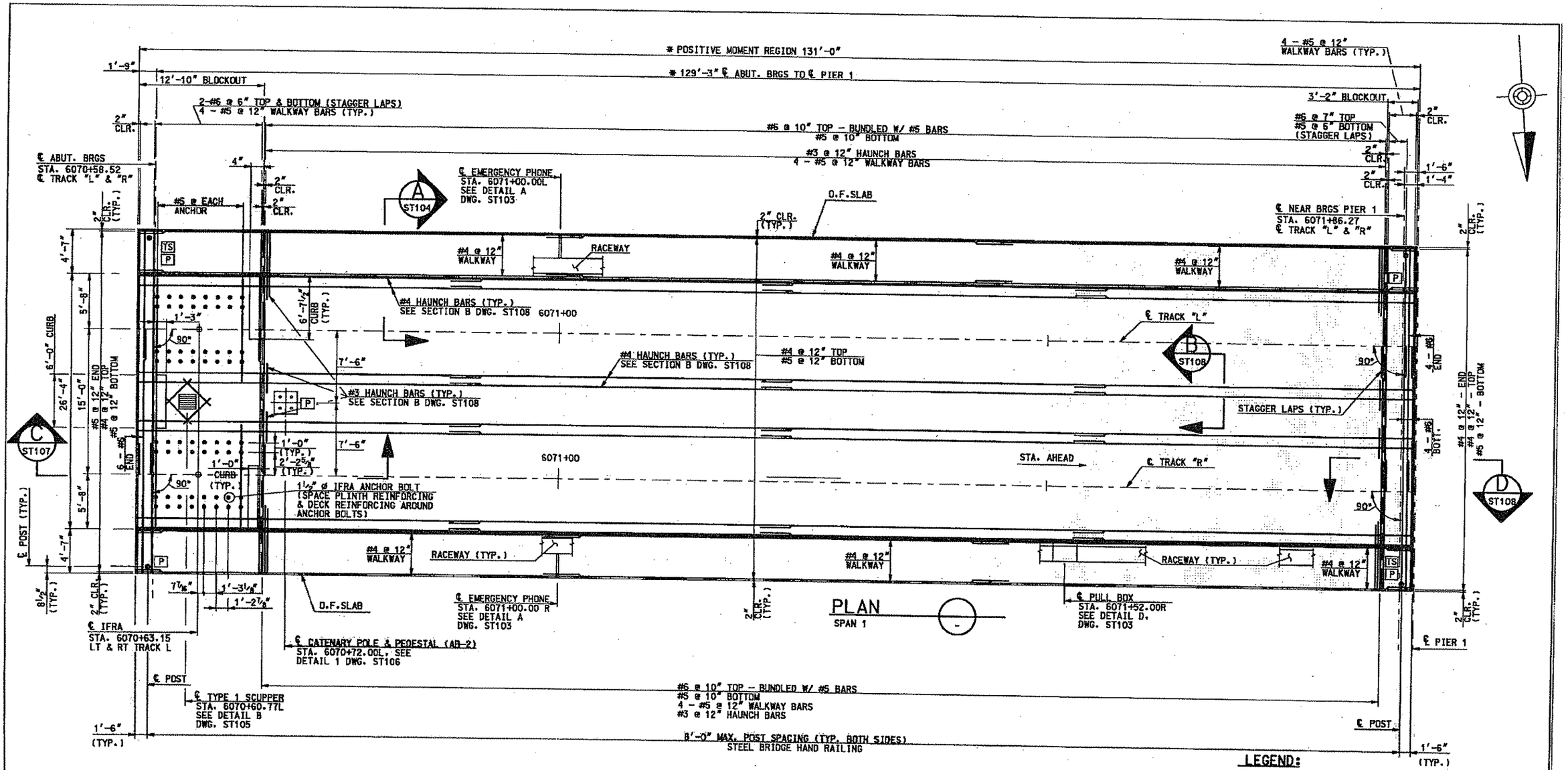

LEGEND:

IFRA - INSULATED FIXED RAIL ANCHOR ASSEMBLY.

* MEASURED ALONG ℄ TRACK "L".

TS - TEST STATION

P - GROUND PLATE

5' 2.5' 0 5' 10'

1" = 5'-0"

NOTES:

1. CATENARY POLES, SIGNALS, AND PLINTHS BY OTHERS.
2. USE A TEMPLATE TO SET IFRA ANCHOR BOLTS.
3. ALL DECK REINFORCEMENT IS BLACK, UNCOATED REBAR.
4. ALL RAILING ELEMENTS TO BE TRULY VERTICAL.
5. STAGGER LAPS OF ALL LONGITUDINAL REINFORCEMENT.

REFERENCES:

1. SEE BC-751M FOR ADDITIONAL SCUPPER DETAILS.
2. FOR ADDITIONAL RAILING DETAILS SEE ST111.

Gannett Fleming

GANNETT FLEMING, INC.
601 Holiday Drive
Foster Plaza III
Suite 200
Pittsburgh, PA. 15220

NO.	DATE	DESCRIPTION

REVISIONS

THE PREPARATION OF THIS DOCUMENT HAS BEEN FINANCED IN PART THROUGH A GRANT FROM THE FEDERAL TRANSIT ADMINISTRATION, U.S. DEPARTMENT OF TRANSPORTATION, UNDER THE URBAN MASS TRANSPORTATION ACT OF 1964, AS AMENDED, FOR THE PORT AUTHORITY OF ALLEGHENY COUNTY, PENNSYLVANIA.

COMMONWEALTH OF PENNSYLVANIA REGISTERED PROFESSIONAL THOMAS G. LEECH ENGINEER 021103 SEAL

SIGNATURE

DMJM HARRIS | AECOM
FOUR GATEWAY CENTER
20TH FLOOR
PITTSBURGH, PA. 15222

APPROVED — 3/10/08 DATE

DESIGNED	CTV
DRAWN	JWM - EPV
CHECKED	CTV
IN CHARGE	TGL
DATE	3/10/08
SCALE	AS SHOWN

PORT AUTHORITY OF ALLEGHENY COUNTY
PITTSBURGH PENNSYLVANIA

NORTH SHORE CONNECTOR
AERIAL STRUCTURE, RETAINED FILL, DEMOLITION OF MILLER PRINTING
DECK PLAN
SPAN 1

Port Authority

CONTRACT NO.	NSC-007		
DWG. NO.	ST085	SHT.	220

/final/gw/aerial/gw st085.dgn 3/7/2008 6:14:47 PM

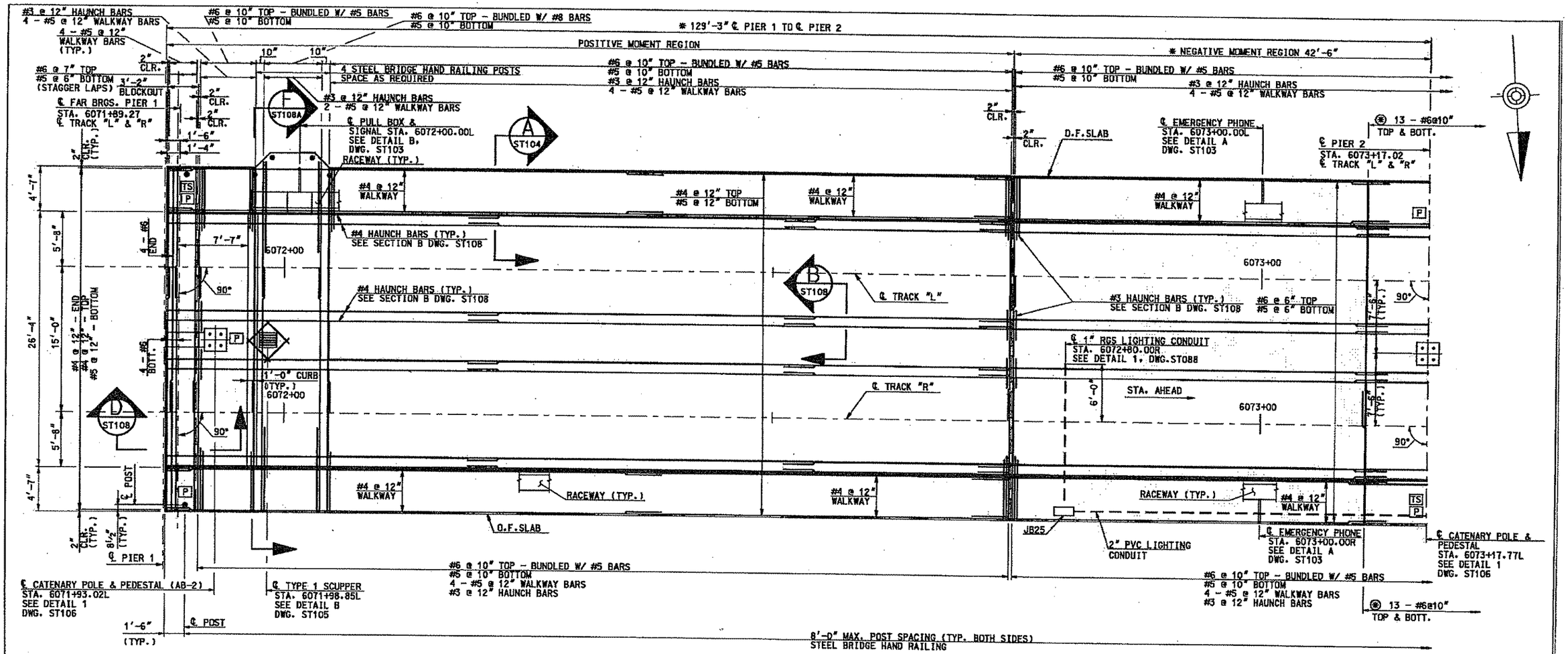

PLAN
SPAN 2

NOTES:
1. CATENARY POLES, SIGNALS, AND PLINTHS BY OTHERS.
2. ALL DECK REINFORCEMENT IS BLACK, UNCOATED REBAR.
3. ALL RAILING ELEMENTS TO BE TRULY VERTICAL.
4. STAGGER LAPS OF ALL LONGITUDINAL REINFORCEMENT.

REFERENCES:
1. SEE BC-751M FOR ADDITIONAL SCUPPER DETAILS.
2. FOR DECK SLAB REINFORCEMENT REQUIRED LAP LENGTHS, SEE TABLE ON DRAWING ST085.
3. FOR ADDITIONAL RAILING DETAILS SEE ST111.

LEGEND:
TS - TEST STATION
P - GROUND PLATE
* MEASURED ALONG ℄ TRACK "L".
(*) SPACE ADDITIONAL #6 BARS BETWEEN MAIN DESIGN REINFORCEMENT AND CENTER OVER ℄ PIER 2.

5' 2.5' 0 5' 10'
1" = 5'-0"

Gannett Fleming
GANNETT FLEMING, INC.
501 Holiday Drive
Foster Plaza III
Suite 200
Pittsburgh, PA. 15220

NO.	DATE	DESCRIPTION

REVISIONS

THE PREPARATION OF THIS DOCUMENT HAS BEEN FINANCED IN PART THROUGH A GRANT FROM THE FEDERAL TRANSIT ADMINISTRATION, U.S. DEPARTMENT OF TRANSPORTATION, UNDER THE URBAN MASS TRANSPORTATION ACT OF 1964, AS AMENDED, FOR THE PORT AUTHORITY OF ALLEGHENY COUNTY, PENNSYLVANIA.

COMMONWEALTH OF PENNSYLVANIA REGISTERED PROFESSIONAL ENGINEER THOMAS G. LEECH 021835-E
SIGNATURE

DMJM HARRIS | AECOM
FOUR GATEWAY CENTER
20TH FLOOR
PITTSBURGH, PA. 15222

APPROVED — DATE 3/10/08

DESIGNED	CTV
DRAWN	JWM - EPV
CHECKED	CTV
IN CHARGE	TGL
DATE	3/10/08
SCALE	AS SHOWN

PORT AUTHORITY OF ALLEGHENY COUNTY
PITTSBURGH PENNSYLVANIA

NORTH SHORE CONNECTOR
AERIAL STRUCTURE, RETAINED FILL, DEMOLITION OF MILLER PRINTING
DECK PLAN
SPAN 2

Port Authority

CONTRACT NO. NSC-007
DWG. NO. ST086 SHT. 221

/final/gw/aerial/gw st086.dgn 3/7/2008 6:14:57 AM

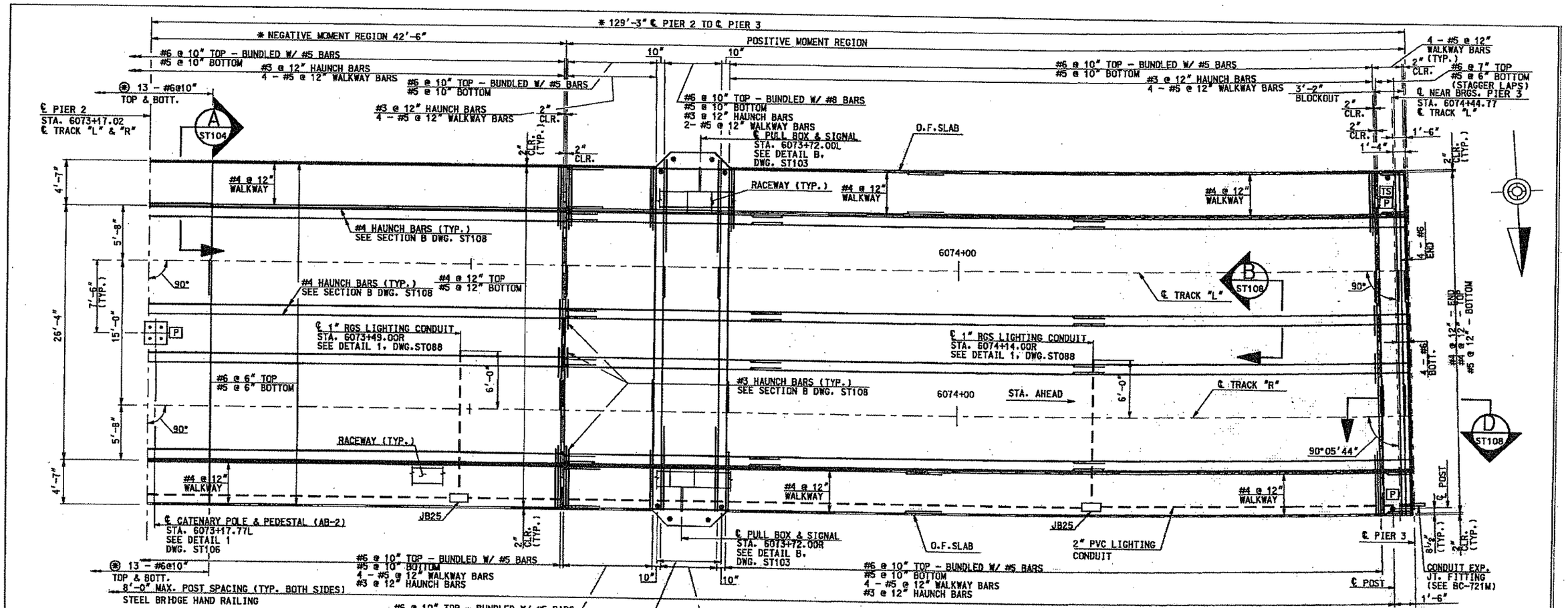

LEGEND:

TS - TEST STATION

P - GROUND PLATE

* MEASURED ALONG ℄ TRACK "L".

⊛ SPACE ADDITIONAL #6 BARS BETWEEN MAIN DESIGN REINFORCEMENT AND CENTER OVER ℄ PIER 2.

REFERENCES:

1. SEE BC-751M FOR ADDITIONAL SCUPPER DETAILS.
2. FOR DECK SLAB REINFORCEMENT REQUIRED LAP LENGTHS, SEE TABLE ON DRAWING ST085.
3. SEE BC-767M FOR ADDTIONAL STRIP SEAL DETAILS.
4. FOR ADDITIONAL RAILING DETAILS SEE ST111.

NOTES:

1. CATENARY POLES, SIGNALS, AND PLINTHS BY OTHERS.
2. ALL DECK REINFORCEMENT IS BLACK, UNCOATED REBAR.
3. ALL RAILING ELEMENTS TO BE TRULY VERTICAL.
4. STAGGER LAPS OF ALL LONGITUDINAL REINFORCEMENT.
5. PLACE 1" DIA. CONDUIT TO AVOID ALL OTHER CONDUIT, REBAR AND STRIP SEALS.

Gannett Fleming

GANNETT FLEMING, INC.
601 Holiday Drive
Foster Plaza III
Suite 200
Pittsburgh, PA. 15220

NO.	DATE	DESCRIPTION

REVISIONS

THE PREPARATION OF THIS DOCUMENT HAS BEEN FINANCED IN PART THROUGH A GRANT FROM THE FEDERAL TRANSIT ADMINISTRATION, U.S. DEPARTMENT OF TRANSPORTATION, UNDER THE URBAN MASS TRANSPORTATION ACT OF 1964, AS AMENDED, FOR THE PORT AUTHORITY OF ALLEGHENY COUNTY, PENNSYLVANIA.

COMMONWEALTH OF PENNSYLVANIA REGISTERED PROFESSIONAL ENGINEER THOMAS G. LEECH 021031 PENNSYLVANIA

SIGNATURE

DMJM HARRIS | AECOM
FOUR GATEWAY CENTER
20TH FLOOR
PITTSBURGH, PA. 15222

APPROVED 3/10/08 DATE

DESIGNED	CTV
DRAWN	JWM - EPV
CHECKED	CTV
IN CHARGE	TGL
DATE	3/10/08
SCALE	AS SHOWN

PORT AUTHORITY OF ALLEGHENY COUNTY
PITTSBURGH PENNSYLVANIA

NORTH SHORE CONNECTOR
AERIAL STRUCTURE, RETAINED FILL, DEMOLITION OF MILLER PRINTING
DECK PLAN
SPAN 3

Port Authority

CONTRACT NO. NSC-007
DWG. NO. ST087 SHT. 222

#DATE# #TIME#
#FILE#

/final/cw/aerial/cw_st087.dgn 3/7/2008 6:15:08 AM

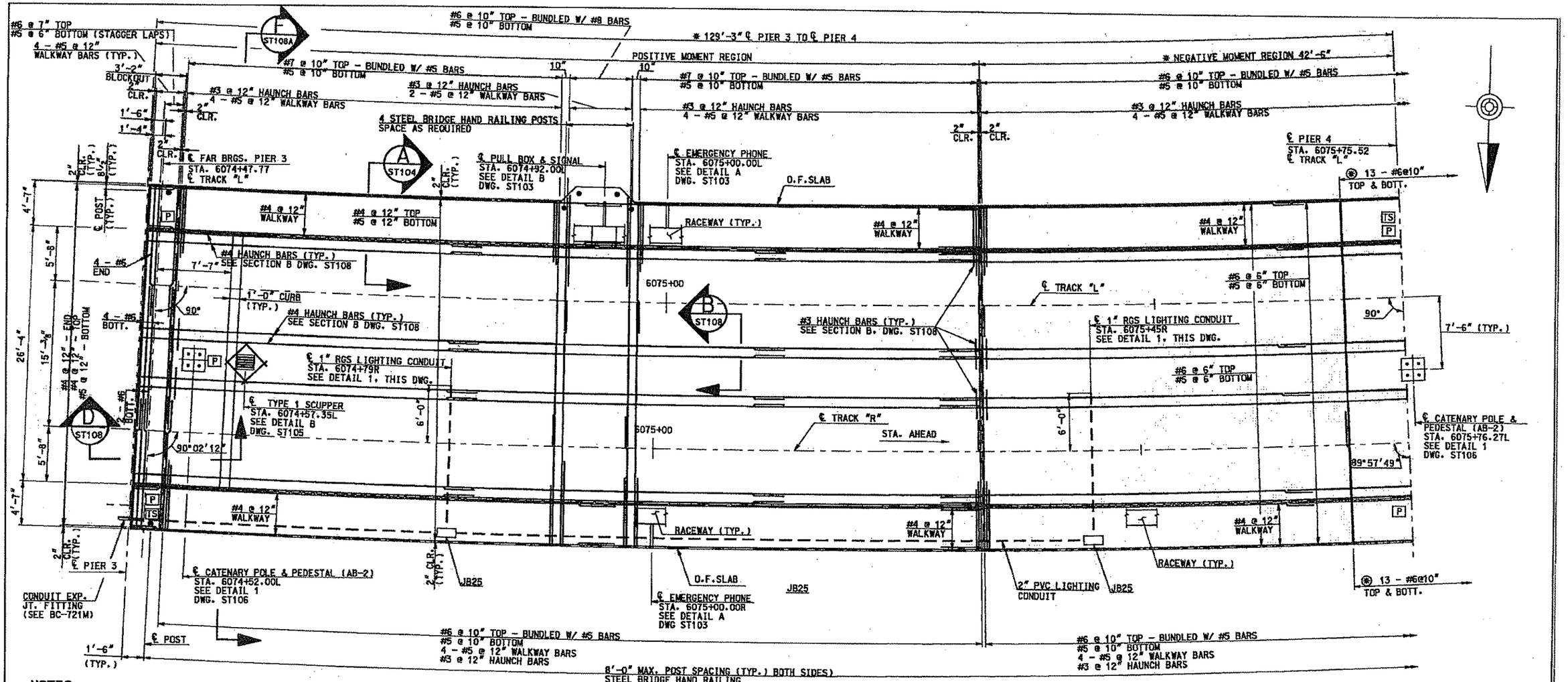

PLAN
SPAN 4

NOTES:

1. CATENARY POLES, EMERGENCY PHONES, SIGNALS, SNOW METER CASES, AND PLINTHS BY OTHERS.
2. ALL DECK REINFORCEMENT IS BLACK, UNCOATED REBAR.
3. ALL RAILING ELEMENTS TO BE TRULY VERTICAL.
4. STAGGER LAPS OF ALL LONGITUDINAL REINFORCEMENT.

REFERENCES:

1. SEE BC-751M FOR ADDITIONAL SCUPPER DETAILS.
2. FOR DECK SLAB REINFORCEMENT REQUIRED LAP LENGTHS, SEE TABLE ON DRAWING ST085.
3. FOR ADDITIONAL RAILING DETAILS SEE ST111.

LEGEND:

TS - TEST STATION
P - GROUND PLATE
* MEASURED ALONG ℄ TRACK "L".
⊛ SPACE ADDITIONAL #6 BARS BETWEEN MAIN DESIGN REINFORCEMENT AND CENTER OVER ℄ PIER 4.

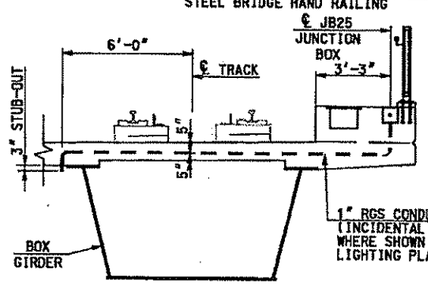

DETAIL 1
N.T.S.
ST087

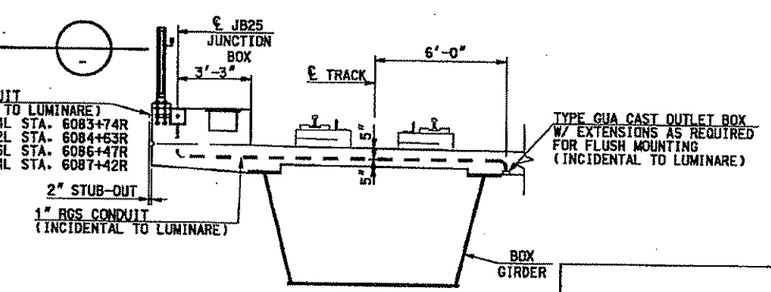

DETAIL 2
N.T.S.
ST095

5' 2.5' 0 5' 10'
1" = 5'-0"

Gannett Fleming

GANNETT FLEMING, INC.
601 Holiday Drive
Foster Plaza III
Suite 200
Pittsburgh, PA. 15220

NO.	DATE	DESCRIPTION

REVISIONS

THE PREPARATION OF THIS DOCUMENT HAS BEEN FINANCED IN PART THROUGH A GRANT FROM THE FEDERAL TRANSIT ADMINISTRATION, U.S. DEPARTMENT OF TRANSPORTATION, UNDER THE URBAN MASS TRANSPORTATION ACT OF 1964, AS AMENDED. FOR THE PORT AUTHORITY OF ALLEGHENY COUNTY, PENNSYLVANIA.

COMMONWEALTH OF PENNSYLVANIA REGISTERED PROFESSIONAL THOMAS G. LEECH
SIGNATURE

DMJM HARRIS | AECOM
FOUR GATEWAY CENTER
20TH FLOOR
PITTSBURGH, PA. 15222
APPROVED 3/10/08 DATE

DESIGNED	CTV
DRAWN	JWM - EPV
CHECKED	CTV
IN CHARGE	TGL
DATE	3/10/08
SCALE	AS SHOWN

PORT AUTHORITY OF ALLEGHENY COUNTY
PITTSBURGH PENNSYLVANIA

NORTH SHORE CONNECTOR
AERIAL STRUCTURE, RETAINED FILL, DEMOLITION OF MILLER PRINTING
DECK PLAN
SPAN 4

Port Authority

CONTRACT NO. NSC-007
DWG. NO. ST088 SHT. 223

/final/gw/aerial/gw st088.dgn 3/7/2008 6:15:20 PM

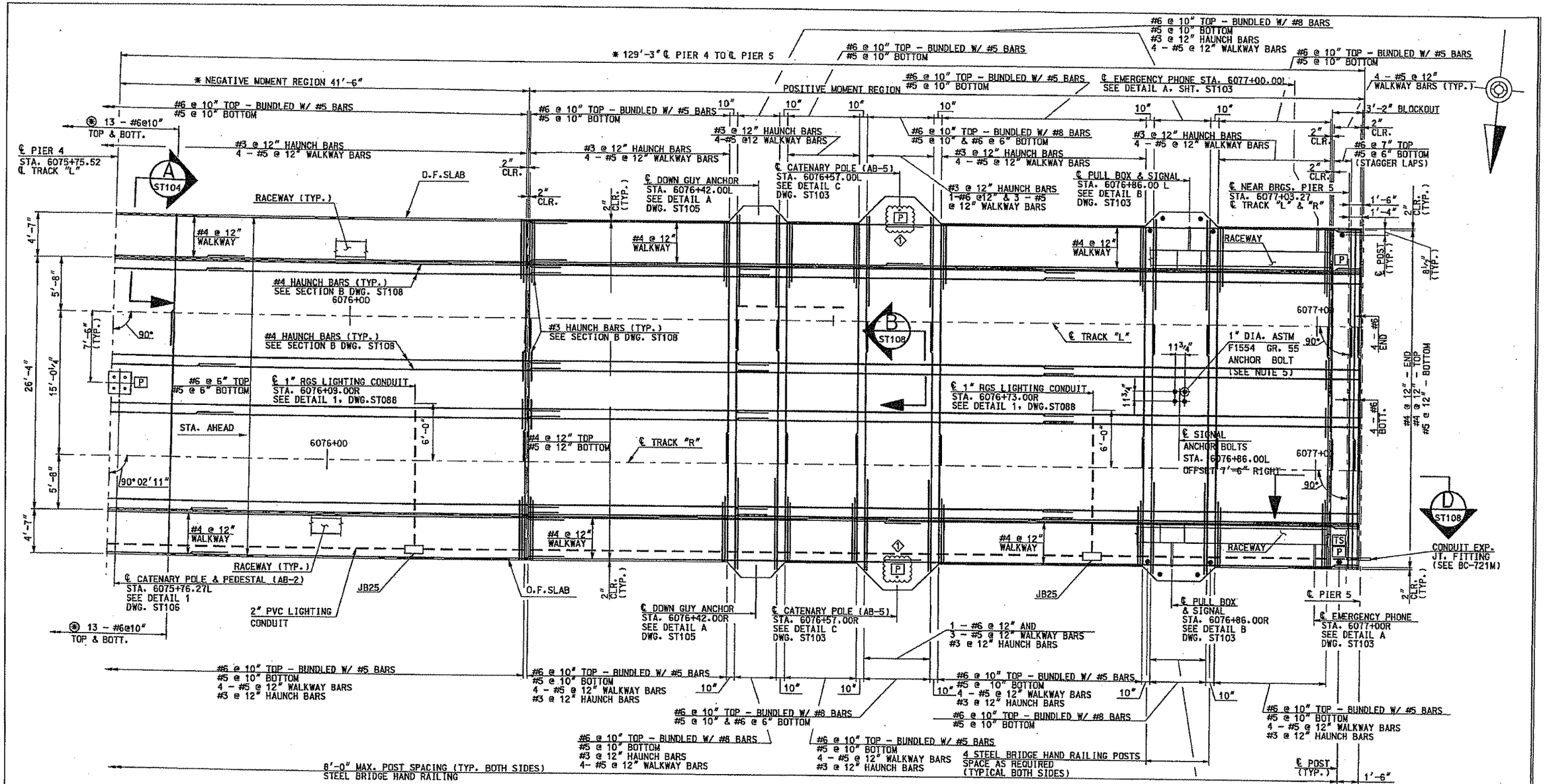

PLAN

SPAN 5

5' 2.5' 0 5' 10'

1" = 5'-0"

LEGEND:

TS - TEST STATION

P - GROUND PLATE

* MEASURED ALONG ℄ TRACK "L".

(*) SPACE ADDITIONAL #6 BARS BETWEEN MAIN DESIGN REINFORCEMENT AND CENTER OVER ℄ PIER 4.

REFERENCES:

1. FOR DECK SLAB REINFORCEMENT REQUIRED LAP LENGTHS, SEE TABLE ON DRAWING ST085.
2. FOR ADDITIONAL RAILING DETAILS SEE DRAWING ST111.

NOTES:

1. CATENARY POLES, EMERGENCY PHONES, SIGNALS, AND PLINTHS BY OTHERS.
2. ALL DECK REINFORCEMENT IS BLACK, UNCOATED REBAR.
3. ALL RAILING ELEMENTS TO BE TRULY VERTICAL.
4. STAGGER LAPS OF ALL LONGITUDINAL REINFORCEMENT.
5. PROVIDE 7" EMBEDMENT & 4" ANCHOR PROJECTION ABOVE TOP OF DECK.

Gannett Fleming

GANNETT FLEMING, INC.
601 Holiday Drive
Foster Plaza III
Suite 200
Pittsburgh, PA. 15220

NO.	DATE	DESCRIPTION
1	4-16-08	ADDENDUM 1 - DRAWING MODIFIED

REVISIONS

THE PREPARATION OF THIS DOCUMENT HAS BEEN FINANCED IN PART THROUGH A GRANT FROM THE FEDERAL TRANSIT ADMINISTRATION, U.S. DEPARTMENT OF TRANSPORTATION, UNDER THE URBAN MASS TRANSPORTATION ACT OF 1964, AS AMENDED, FOR THE PORT AUTHORITY OF ALLEGHENY COUNTY, PENNSYLVANIA.

COMMONWEALTH OF PENNSYLVANIA REGISTERED PROFESSIONAL ENGINEER THOMAS G. LEECH 021653

SIGNATURE

DMJM HARRIS | AECOM
FOUR GATEWAY CENTER
20TH FLOOR
PITTSBURGH, PA. 15222

APPROVED — DATE 3/10/08

DESIGNED	CTV
DRAWN	JWM - EPV
CHECKED	CTV
IN CHARGE	TGL
DATE	3/10/08
SCALE	AS SHOWN

PORT AUTHORITY OF ALLEGHENY COUNTY
PITTSBURGH PENNSYLVANIA

NORTH SHORE CONNECTOR
AERIAL STRUCTURE, RETAINED FILL, DEMOLITION OF MILLER PRINTING
DECK PLAN
SPAN 5

Port Authority

CONTRACT NO. NSC-007

DWG. NO. ST089 SHT. 224

/cgw st089.dgn 4/15/2008 10:46:59 AM

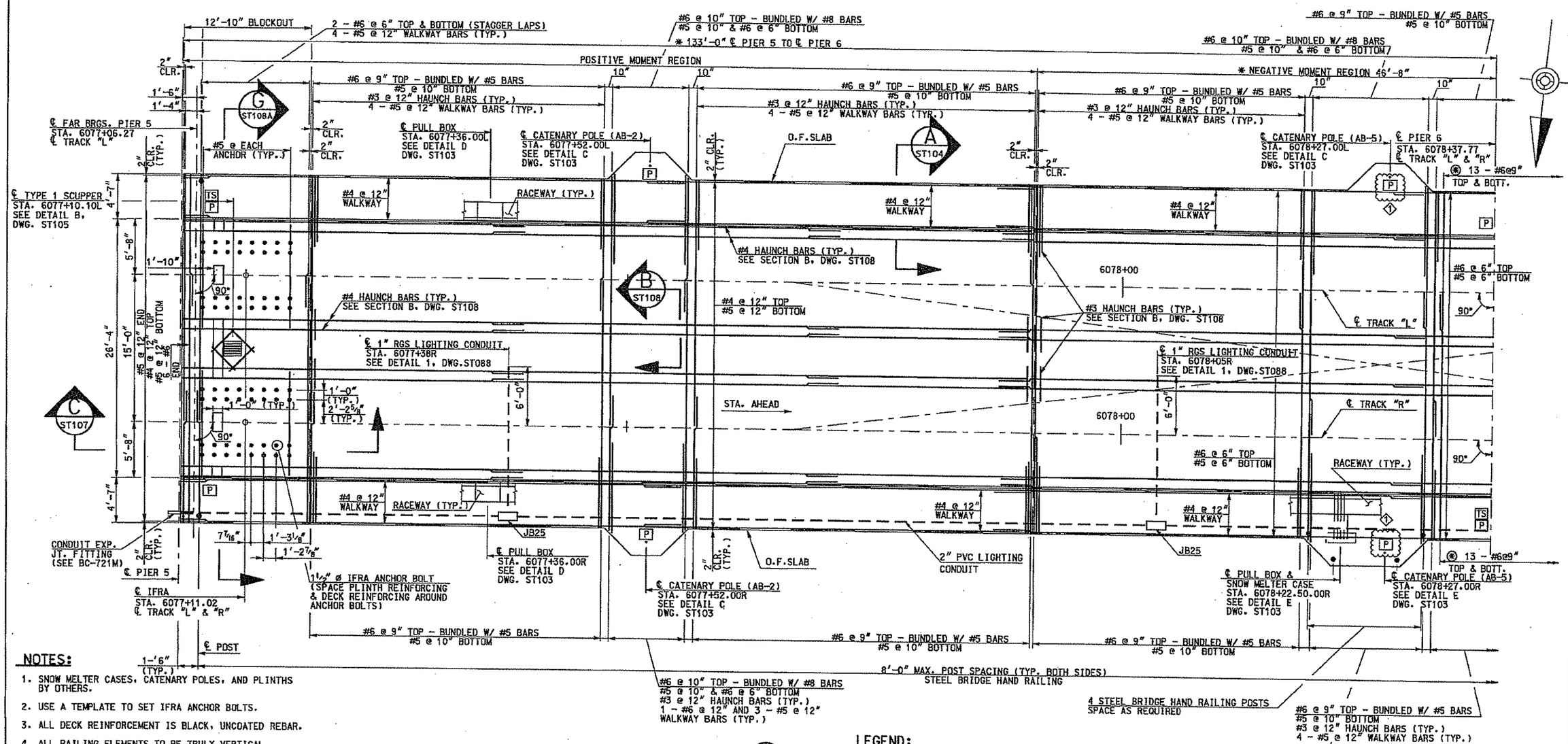

NOTES:

1. SNOW MELTER CASES, CATENARY POLES, AND PLINTHS BY OTHERS.
2. USE A TEMPLATE TO SET IFRA ANCHOR BOLTS.
3. ALL DECK REINFORCEMENT IS BLACK, UNCOATED REBAR.
4. ALL RAILING ELEMENTS TO BE TRULY VERTICAL.
5. STAGGER LAPS OF ALL LONGITUDINAL REINFORCEMENT.

REFERENCES:

1. SEE BC-751M FOR ADDITIONAL SCUPPER DETAILS.
2. FOR DECK SLAB REINFORCEMENT REQUIRED LAP LENGTHS, SEE TABLE ON DRAWING ST085.
3. FOR ADDITIONAL RAILING DETAILS SEE DRAWING ST111.
4. FOR SPECIAL TRACKWORK PLINTH BAR LAYOUT, SEE DRAWING ST099.

PLAN

SPAN 6

LEGEND:

IFRA - INSULATED FIXED RAIL ANCHOR ASSEMBLY.

* MEASURED ALONG ℄ TRACK "L".

TS - TEST STATION

P - GROUND PLATE

⊛ SPACE ADDITIONAL #6 BARS BETWEEN MAIN DESIGN REINFORCEMENT AND CENTER OVER ℄ PIER 6.

Gannett Fleming

GANNETT FLEMING, INC.
501 Holiday Drive
Foster Plaza III
Suite 200
Pittsburgh, PA. 15220

NO.	DATE	DESCRIPTION
1	4-16-08	ADDENDUM 1 - DRAWING MODIFIED

REVISIONS

THE PREPARATION OF THIS DOCUMENT HAS BEEN FINANCED IN PART THROUGH A GRANT FROM THE FEDERAL TRANSIT ADMINISTRATION, U.S. DEPARTMENT OF TRANSPORTATION, UNDER THE URBAN MASS TRANSPORTATION ACT OF 1964, AS AMENDED. FOR THE PORT AUTHORITY OF ALLEGHENY COUNTY, PENNSYLVANIA.

COMMONWEALTH OF PENNSYLVANIA REGISTERED PROFESSIONAL ENGINEER THOMAS G. LEECH DIGITALLY SIGNED 021153 SIGNATURE

DMJM HARRIS | AECOM
FOUR GATEWAY CENTER
20TH FLOOR
PITTSBURGH, PA. 15222
APPROVED 3/10/08 DATE

DESIGNED	CTV
DRAWN	JWM - EPV
CHECKED	CTV
IN CHARGE	TGL
DATE	3/10/08
SCALE	AS SHOWN

PORT AUTHORITY OF ALLEGHENY COUNTY
PITTSBURGH PENNSYLVANIA

NORTH SHORE CONNECTOR
AERIAL STRUCTURE, RETAINED FILL, DEMOLITION OF MILLER PRINTING
DECK PLAN
SPAN 6

Port Authority

CONTRACT NO.	NSC-007		
DWG. NO.	ST090	SHT.	225

/cmx st090.dgn 4/15/2008 10:47:01 PM

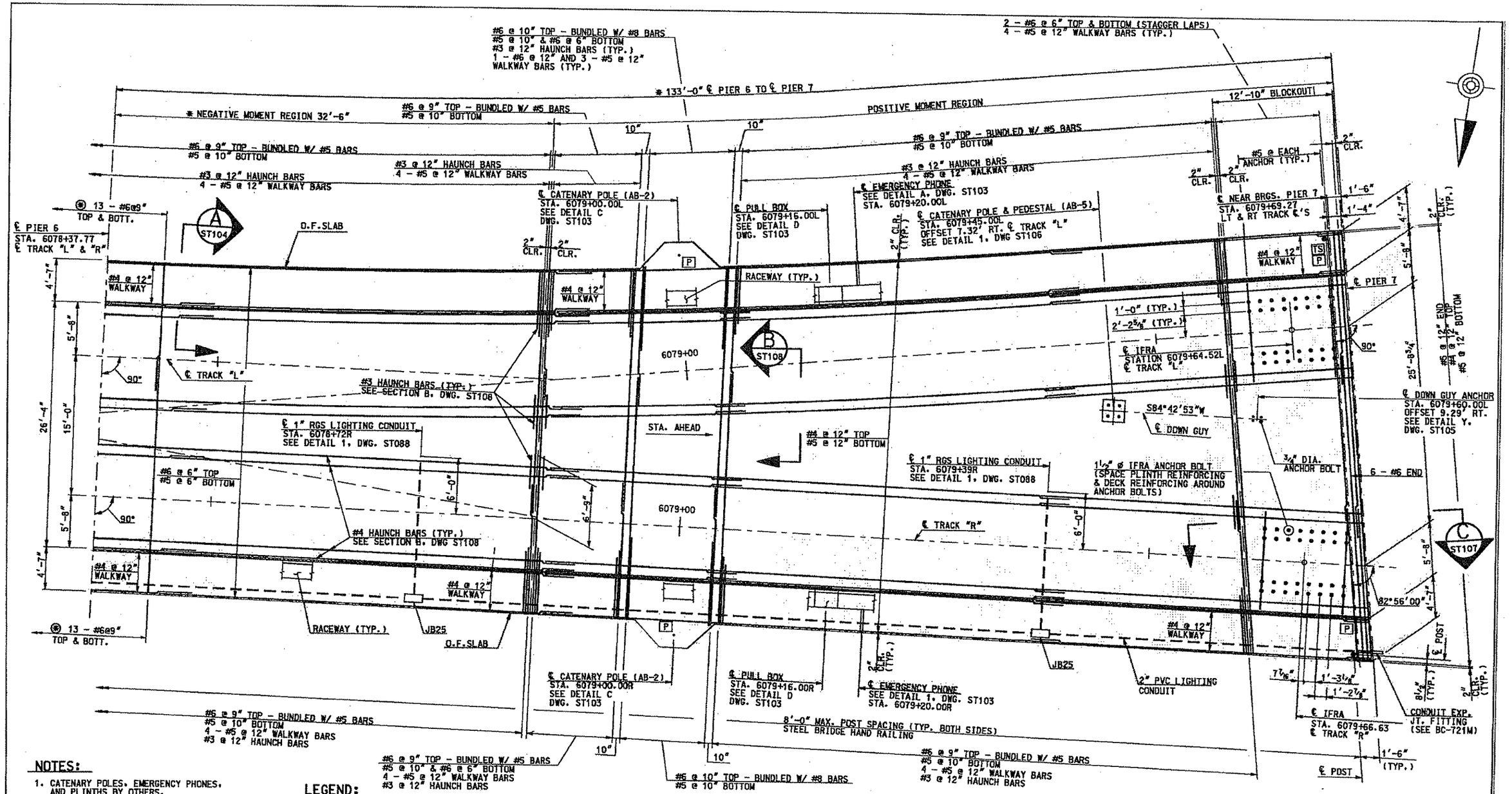

NOTES:

1. CATENARY POLES, EMERGENCY PHONES, AND PLINTHS BY OTHERS.
2. USE A TEMPLATE TO SET IFRA ANCHOR BOLTS.
3. ALL DECK REINFORCEMENT BLACK, UNCOATED REBAR.
4. ALL RAILING ELEMENTS TO BE TRULY VERTICAL.
5. STAGGER LAPS OF ALL LONGITUDINAL REINFORCEMENT.

LEGEND:

IFRA - INSULATED FIXED RAIL ANCHOR ASSEMBLY.
* MEASURED ALONG ℄ TRACK "L".
TS - TEST STATION
P - GROUND PLATE
(#) SPACE ADDITIONAL #6 BARS BETWEEN MAIN DESIGN REINFORCEMENT AND CENTER OVER ℄ PIER 6.

PLAN
SPAN 7

REFERENCES:

1. FOR DECK SLAB REINFORCEMENT REQUIRED LAP LENGTHS, SEE TABLE ON DRAWING ST085.
2. FOR ADDITIONAL RAILING DETAILS SEE DRAWING ST111.
3. FOR SPECIAL TRACKWORK PLINTH BAR LAYOUT, SEE DRAWING ST099.

Gannett Fleming
GANNETT FLEMING, INC.
601 Holiday Drive
Foster Plaza III
Suite 200
Pittsburgh, PA. 15220

NO.	DATE	DESCRIPTION

REVISIONS

THE PREPARATION OF THIS DOCUMENT HAS BEEN FINANCED IN PART THROUGH A GRANT FROM THE FEDERAL TRANSIT ADMINISTRATION, U.S. DEPARTMENT OF TRANSPORTATION, UNDER THE URBAN MASS TRANSPORTATION ACT OF 1964, AS AMENDED. FOR THE PORT AUTHORITY OF ALLEGHENY COUNTY, PENNSYLVANIA.

REGISTERED PROFESSIONAL ENGINEER THOMAS G. LEECH
SIGNATURE

DMJM HARRIS | AECOM
FOUR GATEWAY CENTER
20TH FLOOR
PITTSBURGH, PA. 15222

APPROVED 3/10/08 DATE

DESIGNED	CTV
DRAWN	JWM - EPV
CHECKED	CTV
IN CHARGE	TGL
DATE	3/10/08
SCALE	AS SHOWN

PORT AUTHORITY OF ALLEGHENY COUNTY
PITTSBURGH PENNSYLVANIA

NORTH SHORE CONNECTOR
AERIAL STRUCTURE, RETAINED FILL, DEMOLITION OF MILLER PRINTING
DECK PLAN
SPAN 7

Port Authority

CONTRACT NO. NSC-007
DWG. NO. ST091 SHT. 228

#DATE# #TIME#
#FILE#

/final/gw/aerial/gw_st091.dgn 3/7/2008 6:15:57 PM

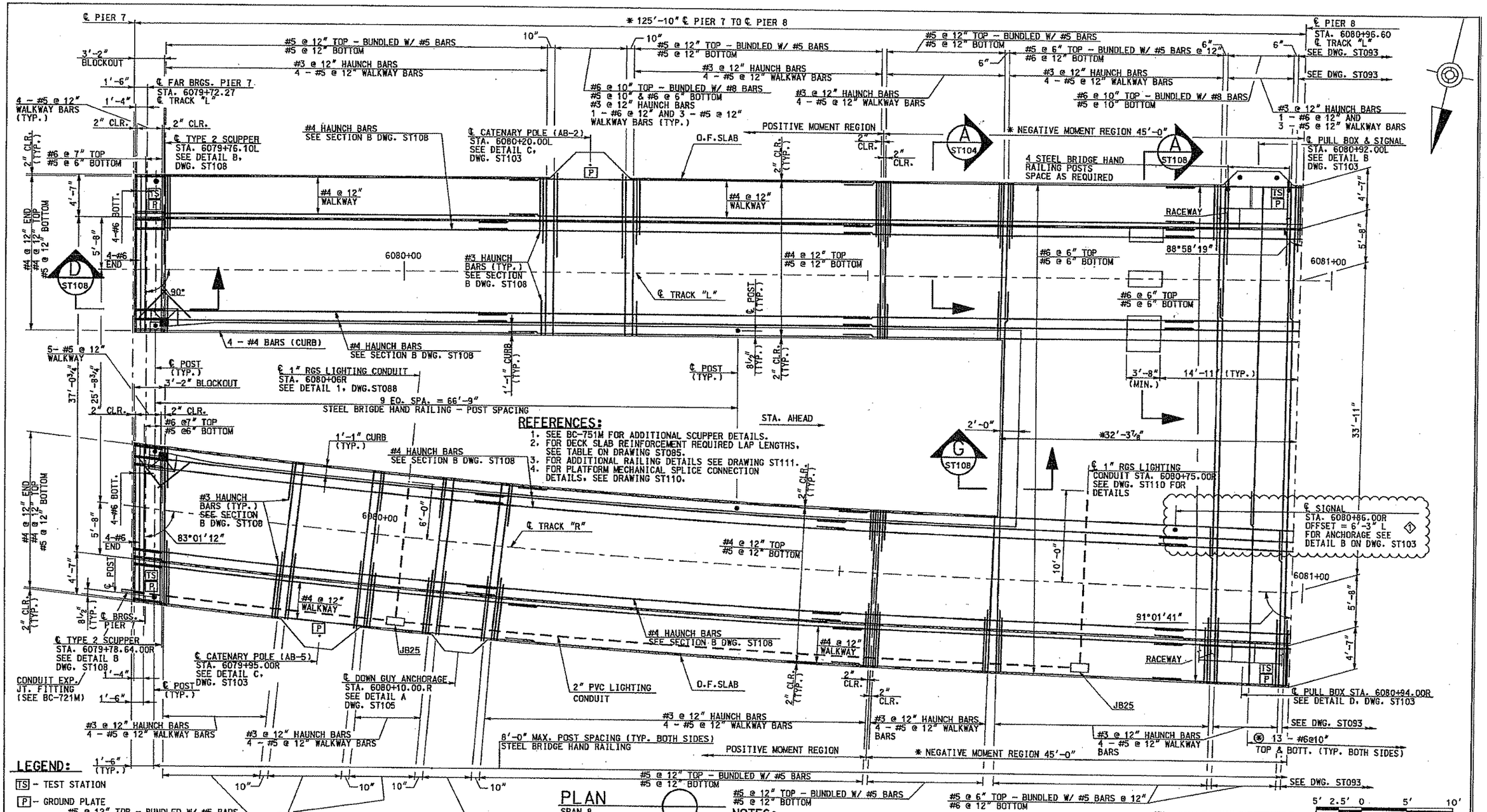

REFERENCES:

1. SEE BC-751M FOR ADDITIONAL SCUPPER DETAILS.
2. FOR DECK SLAB REINFORCEMENT REQUIRED LAP LENGTHS, SEE TABLE ON DRAWING ST085.
3. FOR ADDITIONAL RAILING DETAILS SEE DRAWING ST111.
4. FOR PLATFORM MECHANICAL SPLICE CONNECTION DETAILS, SEE DRAWING ST110.

LEGEND:

TS - TEST STATION

P - GROUND PLATE

* MEASURED ALONG ℄ TRACK "L".

(*) SPACE ADDITIONAL #6 BARS BETWEEN MAIN DESIGN REINFORCEMENT AND CENTER OVER ℄ PIER 8.

PLAN

SPAN 8

NOTES:

1. CATENARY POLES, SIGNALS, AND PLINTHS BY OTHERS.
2. ALL DECK REINFORCEMENT IS BLACK, UNCOATED REBAR.
3. ALL RAILING ELEMENTS TO BE TRULY VERTICAL.
4. PLATFORM SUPPORT REINFORCEMENT NOT SHOWN FOR CLARITY.
5. STAGGER LAPS OF ALL LONGITUDINAL REINFORCEMENT.

Gannett Fleming

GANNETT FLEMING, INC.
601 Holiday Drive
Foster Plaza III
Suite 200
Pittsburgh, PA. 15220

NO.	DATE	DESCRIPTION
1	4-16-08	ADDENDUM 1 - DRAWING MODIFIED

REVISIONS

THE PREPARATION OF THIS DOCUMENT HAS BEEN FINANCED IN PART THROUGH A GRANT FROM THE FEDERAL TRANSIT ADMINISTRATION, U.S. DEPARTMENT OF TRANSPORTATION, UNDER THE URBAN MASS TRANSPORTATION ACT OF 1964, AS AMENDED. FOR THE PORT AUTHORITY OF ALLEGHENY COUNTY, PENNSYLVANIA.

COMMONWEALTH OF PENNSYLVANIA REGISTERED PROFESSIONAL THOMAS G. LEECH 021837

SIGNATURE

DMJM HARRIS | AECOM
FOUR GATEWAY CENTER
20TH FLOOR
PITTSBURGH, PA. 15222

APPROVED — DATE 3/10/08

DESIGNED	CTV
DRAWN	JWM - EPV
CHECKED	CTV
IN CHARGE	TGL
DATE	3/10/08
SCALE	AS SHOWN

PORT AUTHORITY OF ALLEGHENY COUNTY
PITTSBURGH PENNSYLVANIA

NORTH SHORE CONNECTOR
AERIAL STRUCTURE, RETAINED FILL, DEMOLITION OF MILLER PRINTING
DECK PLAN
SPAN 8

Port Authority

CONTRACT NO. NSC-007
DWG. NO. ST092 SHT. 227

/gw st092.dgn 4/15/2008 10:47:03 AM

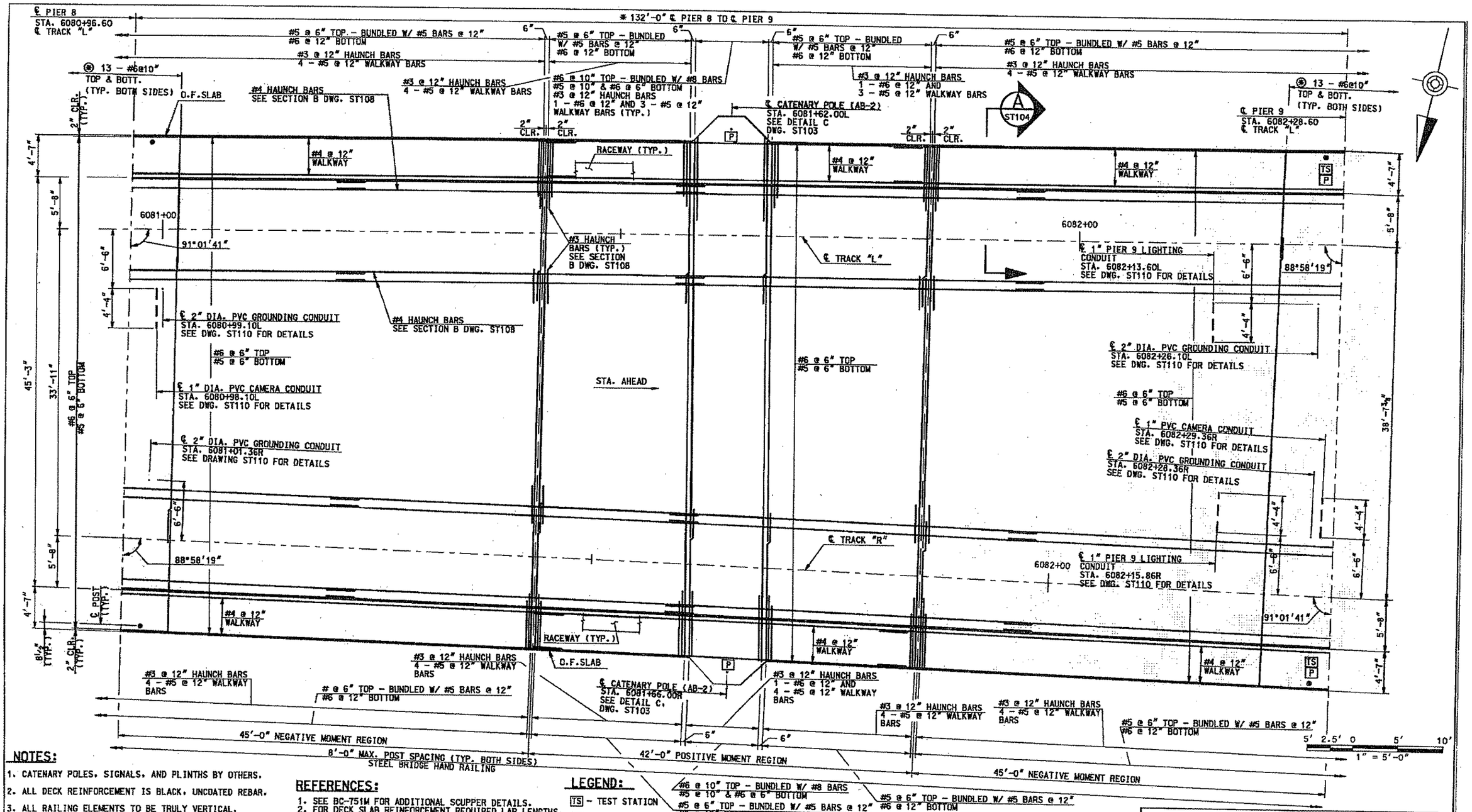

NOTES:

1. CATENARY POLES, SIGNALS, AND PLINTHS BY OTHERS.
2. ALL DECK REINFORCEMENT IS BLACK, UNCOATED REBAR.
3. ALL RAILING ELEMENTS TO BE TRULY VERTICAL.
4. STAGGER LAPS OF ALL LONGITUDINAL REINFORCEMENT.
5. PLATFORM SUPPORT REINFORCEMENT NOT SHOWN FOR CLARITY.

REFERENCES:

1. SEE BC-751M FOR ADDITIONAL SCUPPER DETAILS.
2. FOR DECK SLAB REINFORCEMENT REQUIRED LAP LENGTHS, SEE TABLE ON DRAWING ST085.
3. FOR ADDITIONAL RAILING DETAILS SEE DRAWING ST111.
4. FOR PLATFORM MECHANICAL SPLICE CONNECTION DETAILS, SEE DRAWING ST110.

LEGEND:

TS - TEST STATION
P - GROUND PLATE
* MEASURED ALONG LEFT & RIGHT TRACK ℄'S.
(B) SPACE ADDITIONAL #6 BARS BETWEEN MAIN DESIGN REINFORCEMENT AND CENTER OVER ℄ PIER 8 & 9.

#6 @ 10" TOP - BUNDLED W/ #8 BARS
#5 @ 10" & #6 @ 6" BOTTOM
#5 @ 6" TOP - BUNDLED W/ #5 BARS @ 12"
#6 @ 12" BOTTOM
#5 @ 6" TOP - BUNDLED W/ #5 BARS @ 12"
#6 @ 12" BOTTOM

PLAN

SPAN 9

Gannett Fleming

GANNETT FLEMING, INC.
601 Holiday Drive
Foster Plaza III
Suite 200
Pittsburgh, PA. 15220

NO.	DATE	DESCRIPTION

REVISIONS

THE PREPARATION OF THIS DOCUMENT HAS BEEN FINANCED IN PART THROUGH A GRANT FROM THE FEDERAL TRANSIT ADMINISTRATION, U.S. DEPARTMENT OF TRANSPORTATION, UNDER THE URBAN MASS TRANSPORTATION ACT OF 1964, AS AMENDED, FOR THE PORT AUTHORITY OF ALLEGHENY COUNTY, PENNSYLVANIA.

CONTINUING EDUCATION
THOMAS G. LEECH
A PROFESSIONAL ENGINEER
SIGNATURE

DMJM HARRIS | AECOM
FOUR GATEWAY CENTER
20TH FLOOR
PITTSBURGH, PA. 15222
APPROVED — DATE 3/10/08

DESIGNED	ALS - JDM
DRAWN	JWM - EPV
CHECKED	CTV
IN CHARGE	TGL
DATE	3/10/08
SCALE	AS SHOWN

PORT AUTHORITY OF ALLEGHENY COUNTY
PITTSBURGH PENNSYLVANIA

NORTH SHORE CONNECTOR
AERIAL STRUCTURE, RETAINED FILL, DEMOLITION OF MILLER PRINTING
DECK PLAN
SPAN 9

Port Authority

CONTRACT NO.	NSC-007		
DWG. NO.	ST093	SHT.	228

/final/cw/aerial/cw st093.dgn 3/7/2008 6:16:22 AM

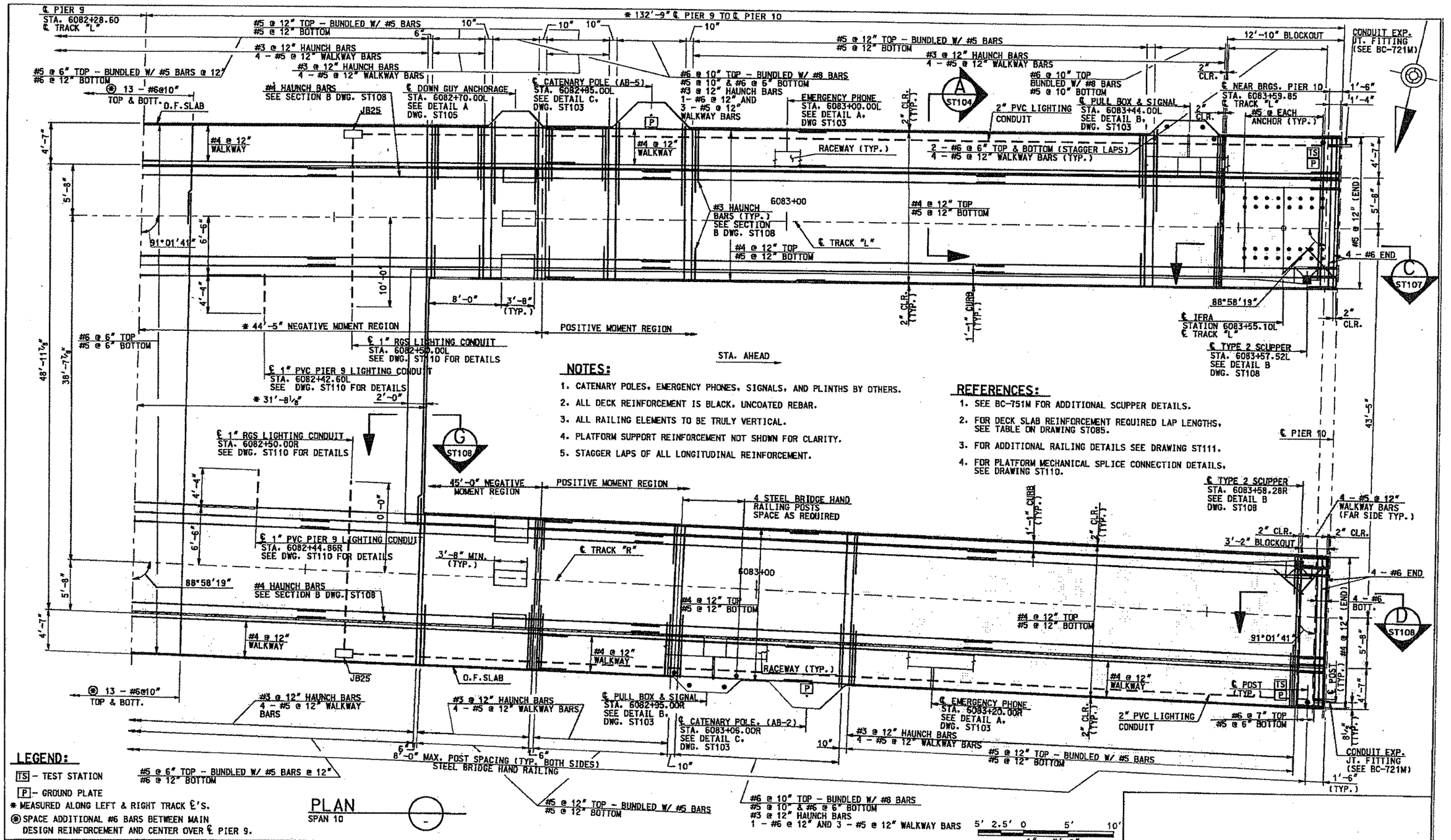

NOTES:

1. CATENARY POLES, EMERGENCY PHONES, SIGNALS, AND PLINTHS BY OTHERS.
2. ALL DECK REINFORCEMENT IS BLACK, UNCOATED REBAR.
3. ALL RAILING ELEMENTS TO BE TRULY VERTICAL.
4. PLATFORM SUPPORT REINFORCEMENT NOT SHOWN FOR CLARITY.
5. STAGGER LAPS OF ALL LONGITUDINAL REINFORCEMENT.

REFERENCES:

1. SEE BC-751M FOR ADDITIONAL SCUPPER DETAILS.
2. FOR DECK SLAB REINFORCEMENT REQUIRED LAP LENGTHS, SEE TABLE ON DRAWING ST085.
3. FOR ADDITIONAL RAILING DETAILS SEE DRAWING ST111.
4. FOR PLATFORM MECHANICAL SPLICE CONNECTION DETAILS, SEE DRAWING ST110.

LEGEND:

TS - TEST STATION

P - GROUND PLATE

* MEASURED ALONG LEFT & RIGHT TRACK ℄'S.

(B) SPACE ADDITIONAL #6 BARS BETWEEN MAIN DESIGN REINFORCEMENT AND CENTER OVER ℄ PIER 9.

PLAN

SPAN 10

Gannett Fleming

GANNETT FLEMING, INC.
601 Holiday Drive
Foster Plaza III
Suite 200
Pittsburgh, PA. 15220

NO.	DATE	DESCRIPTION

REVISIONS

THE PREPARATION OF THIS DOCUMENT HAS BEEN FINANCED IN PART THROUGH A GRANT FROM THE FEDERAL TRANSIT ADMINISTRATION, U.S. DEPARTMENT OF TRANSPORTATION, UNDER THE URBAN MASS TRANSPORTATION ACT OF 1964, AS AMENDED, FOR THE PORT AUTHORITY OF ALLEGHENY COUNTY, PENNSYLVANIA.

COMMONWEALTH OF PENNSYLVANIA REGISTERED PROFESSIONAL ENGINEER THOMAS G. LEECH

SIGNATURE

DMJM HARRIS | AECOM
FOUR GATEWAY CENTER
20TH FLOOR
PITTSBURGH, PA. 15222

APPROVED — DATE 3/10/08

DESIGNED	CTV
DRAWN	JWM - EPV
CHECKED	CTV
IN CHARGE	TGL
DATE	3/10/08
SCALE	AS SHOWN

PORT AUTHORITY OF ALLEGHENY COUNTY
PITTSBURGH PENNSYLVANIA

NORTH SHORE CONNECTOR
AERIAL STRUCTURE, RETAINED FILL, DEMOLITION OF MILLER PRINTING
DECK PLAN
SPAN 10

Port Authority

CONTRACT NO. NSC-007
DWG. NO. ST094 SHT. 229

/final/gw/aerial/gw st094.dgn 3/7/2008 6:16:35 AM

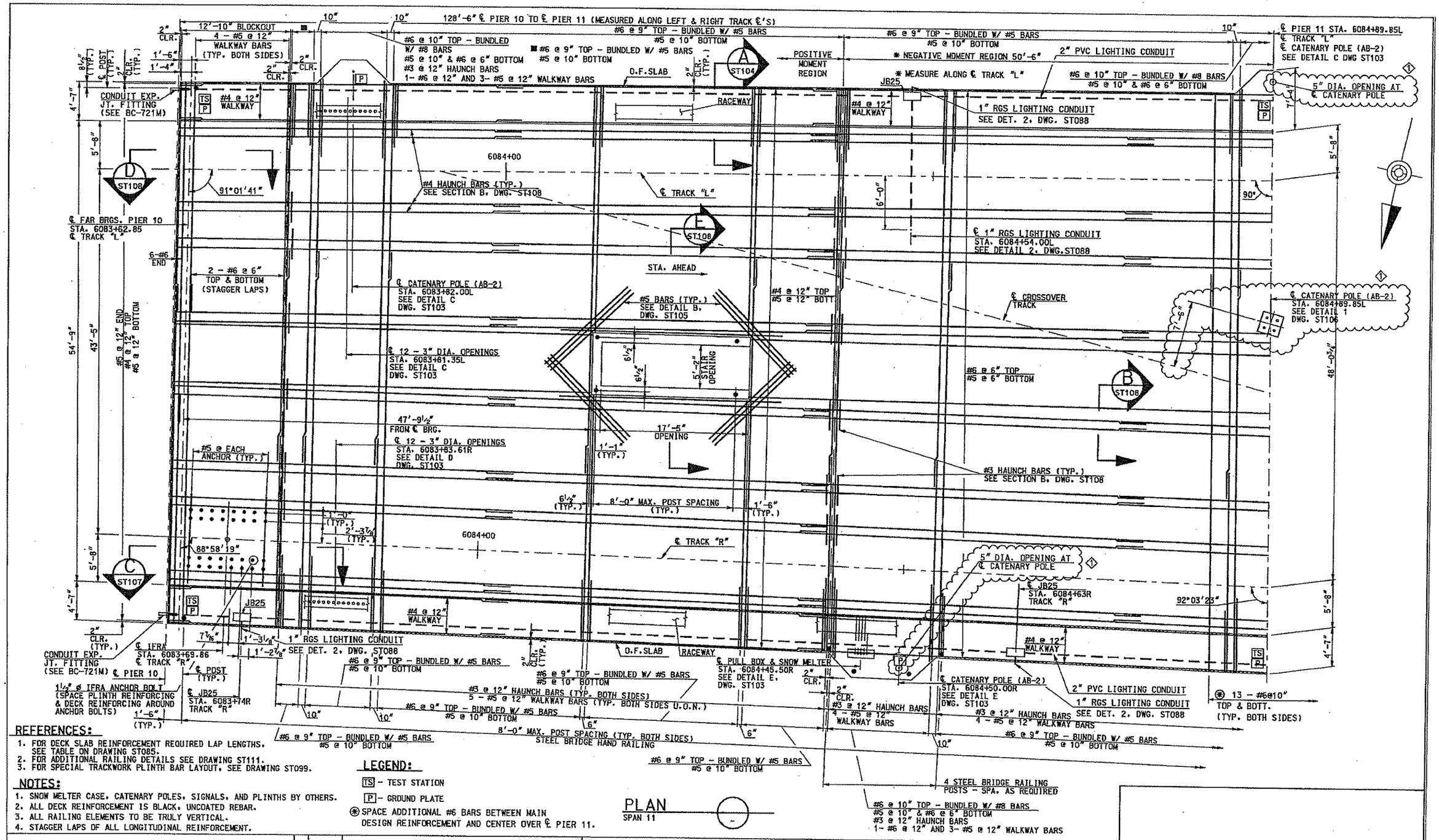

REFERENCES:

1. FOR DECK SLAB REINFORCEMENT REQUIRED LAP LENGTHS, SEE TABLE ON DRAWING ST085.
2. FOR ADDITIONAL RAILING DETAILS SEE DRAWING ST111.
3. FOR SPECIAL TRACKWORK PLINTH BAR LAYOUT, SEE DRAWING ST099.

NOTES:

1. SNOW MELTER CASE, CATENARY POLES, SIGNALS, AND PLINTHS BY OTHERS.
2. ALL DECK REINFORCEMENT IS BLACK, UNCOATED REBAR.
3. ALL RAILING ELEMENTS TO BE TRULY VERTICAL.
4. STAGGER LAPS OF ALL LONGITUDINAL REINFORCEMENT.

LEGEND:

TS - TEST STATION

P - GROUND PLATE

⊛ SPACE ADDITIONAL #6 BARS BETWEEN MAIN DESIGN REINFORCEMENT AND CENTER OVER ℄ PIER 11.

PLAN

SPAN 11

Gannett Fleming

GANNETT FLEMING, INC.
601 Holiday Drive
Foster Plaza III
Suite 200
Pittsburgh, PA. 15220

NO.	DATE	DESCRIPTION
1	4-16-08	ADDENDUM 1 - DRAWING MODIFIED

REVISIONS

THE PREPARATION OF THIS DOCUMENT HAS BEEN FINANCED IN PART THROUGH A GRANT FROM THE FEDERAL TRANSIT ADMINISTRATION, U.S. DEPARTMENT OF TRANSPORTATION, UNDER THE URBAN MASS TRANSPORTATION ACT OF 1964, AS AMENDED, FOR THE PORT AUTHORITY OF ALLEGHENY COUNTY, PENNSYLVANIA.

COMMONWEALTH OF PENNSYLVANIA REGISTERED PROFESSIONAL ENGINEER THOMAS G. LEECH

SIGNATURE

DMJM HARRIS | AECOM
FOUR GATEWAY CENTER
20TH FLOOR
PITTSBURGH, PA. 15222

APPROVED — DATE 3/10/08

DESIGNED	CTV
DRAWN	JWM - EPV
CHECKED	CTV
IN CHARGE	TGL
DATE	3/10/08
SCALE	N.T.S.

PORT AUTHORITY OF ALLEGHENY COUNTY
PITTSBURGH PENNSYLVANIA

NORTH SHORE CONNECTOR
AERIAL STRUCTURE, RETAINED FILL, DEMOLITION OF MILLER PRINTING
DECK PLAN
SPAN 11

Port Authority

CONTRACT NO. NSC-007
DWG. NO. ST095 SHT. 230

/gw st095.dgn 4/15/2008 10:47:05 AM

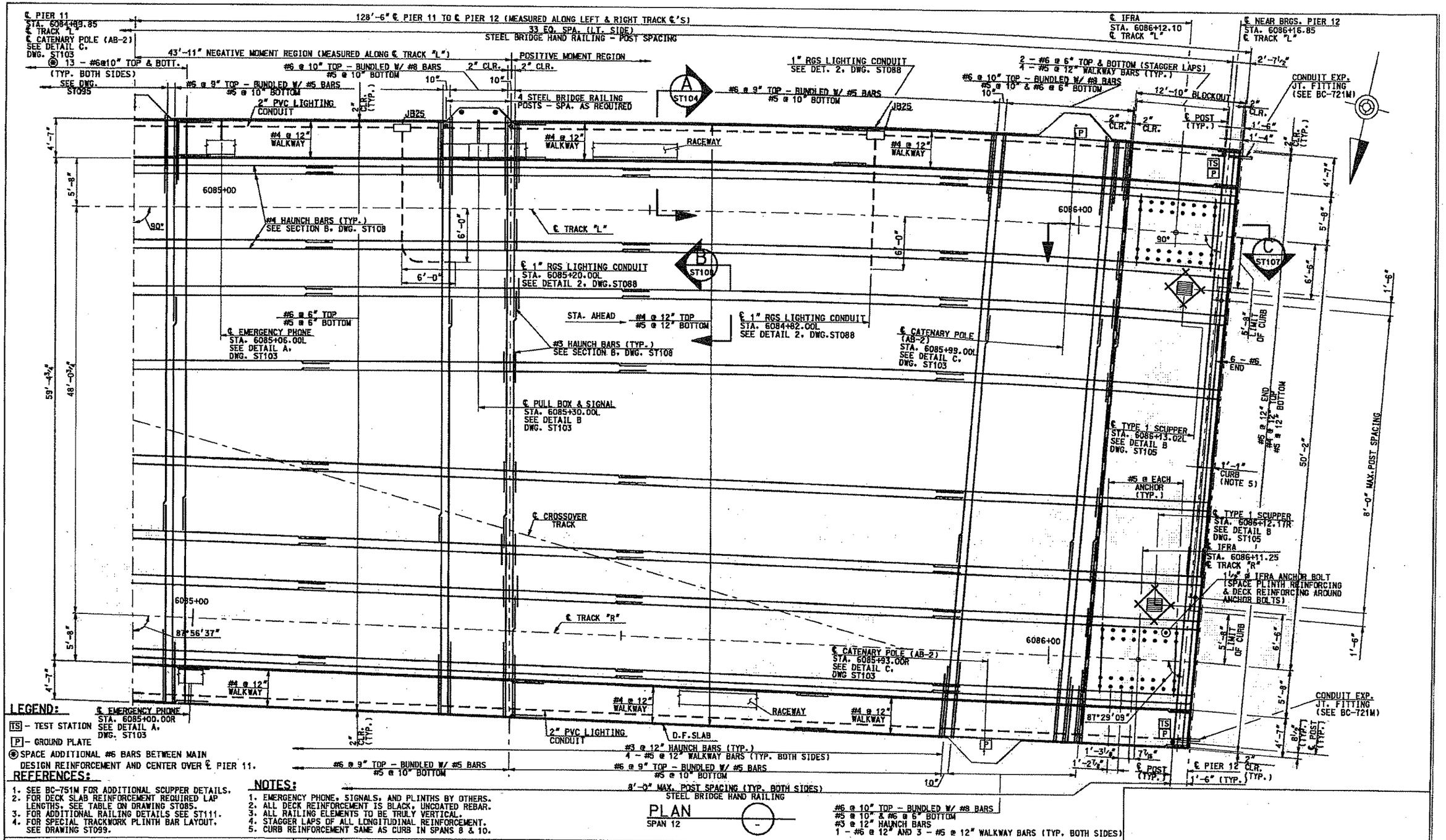

LEGEND:

TS - TEST STATION

P - GROUND PLATE

(8) SPACE ADDITIONAL #6 BARS BETWEEN MAIN DESIGN REINFORCEMENT AND CENTER OVER ℄ PIER 11.

REFERENCES:

1. SEE BC-751M FOR ADDITIONAL SCUPPER DETAILS.
2. FOR DECK SLAB REINFORCEMENT REQUIRED LAP LENGTHS, SEE TABLE ON DRAWING ST085.
3. FOR ADDITIONAL RAILING DETAILS SEE ST111.
4. FOR SPECIAL TRACKWORK PLINTH BAR LAYOUT, SEE DRAWING ST099.

NOTES:

1. EMERGENCY PHONE, SIGNALS, AND PLINTHS BY OTHERS.
2. ALL DECK REINFORCEMENT IS BLACK, UNCOATED REBAR.
3. ALL RAILING ELEMENTS TO BE TRULY VERTICAL.
4. STAGGER LAPS OF ALL LONGITUDINAL REINFORCEMENT.
5. CURB REINFORCEMENT SAME AS CURB IN SPANS 8 & 10.

Gannett Fleming

GANNETT FLEMING, INC.
601 Holiday Drive
Foster Plaza III
Suite 200
Pittsburgh, PA. 15220

NO.	DATE	DESCRIPTION

REVISIONS

THE PREPARATION OF THIS DOCUMENT HAS BEEN FINANCED IN PART THROUGH A GRANT FROM THE FEDERAL TRANSIT ADMINISTRATION, U.S. DEPARTMENT OF TRANSPORTATION, UNDER THE URBAN MASS TRANSPORTATION ACT OF 1964, AS AMENDED. FOR THE PORT AUTHORITY OF ALLEGHENY COUNTY, PENNSYLVANIA.

COMMONWEALTH OF PENNSYLVANIA
REGISTERED PROFESSIONAL ENGINEER
THOMAS G. LEECH
ENGINEER
022158
SIGNATURE

DMJM HARRIS | AECOM
FOUR GATEWAY CENTER
20TH FLOOR
PITTSBURGH, PA. 15222

3/10/08
APPROVED DATE

DESIGNED	CTV
DRAWN	JWM - EPV
CHECKED	CTV
IN CHARGE	TGL
DATE	3/10/08
SCALE	N.T.S.

PORT AUTHORITY OF ALLEGHENY COUNTY
PITTSBURGH PENNSYLVANIA

NORTH SHORE CONNECTOR
AERIAL STRUCTURE, RETAINED FILL, DEMOLITION OF MILLER PRINTING
DECK PLAN
SPAN 12

Port Authority

CONTRACT NO.	NSC-007		
DWG. NO.	ST096	SHT.	231

/final/gw/aerial/gw_st096.dgn 3/7/2008 6:17:02 AM

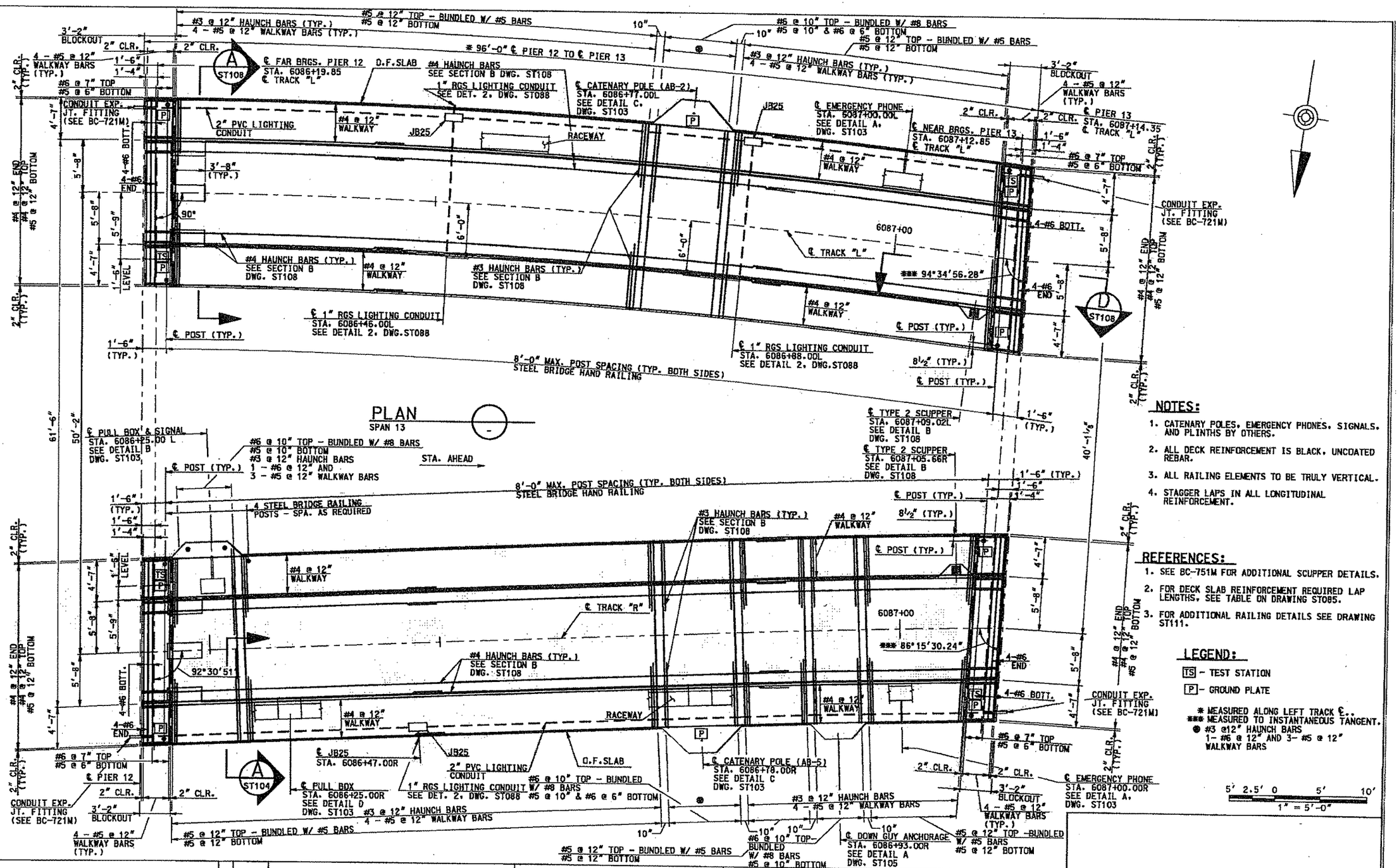

PLAN

SPAN 13

NOTES:

1. CATENARY POLES, EMERGENCY PHONES, SIGNALS, AND PLINTHS BY OTHERS.
2. ALL DECK REINFORCEMENT IS BLACK, UNCOATED REBAR.
3. ALL RAILING ELEMENTS TO BE TRULY VERTICAL.
4. STAGGER LAPS IN ALL LONGITUDINAL REINFORCEMENT.

REFERENCES:

1. SEE BC-751M FOR ADDITIONAL SCUPPER DETAILS.
2. FOR DECK SLAB REINFORCEMENT REQUIRED LAP LENGTHS, SEE TABLE ON DRAWING ST085.
3. FOR ADDITIONAL RAILING DETAILS SEE DRAWING ST111.

LEGEND:

TS - TEST STATION

P - GROUND PLATE

* MEASURED ALONG LEFT TRACK ℄.

*** MEASURED TO INSTANTANEOUS TANGENT.

● #3 @12" HAUNCH BARS 1- #6 @ 12" AND 3- #5 @ 12" WALKWAY BARS

5' 2.5' 0 5' 10'

1" = 5'-0"

Gannett Fleming

GANNETT FLEMING, INC.
601 Holiday Drive
Foster Plaza III
Suite 200
Pittsburgh, PA. 15220

NO.	DATE	DESCRIPTION

REVISIONS

THE PREPARATION OF THIS DOCUMENT HAS BEEN FINANCED IN PART THROUGH A GRANT FROM THE FEDERAL TRANSIT ADMINISTRATION, U.S. DEPARTMENT OF TRANSPORTATION, UNDER THE URBAN MASS TRANSPORTATION ACT OF 1964, AS AMENDED, FOR THE PORT AUTHORITY OF ALLEGHENY COUNTY, PENNSYLVANIA.

COMMONWEALTH OF PENNSYLVANIA REGISTERED PROFESSIONAL ENGINEER THOMAS G. LEECH

SIGNATURE

DMJM HARRIS | AECOM
FOUR GATEWAY CENTER
20TH FLOOR
PITTSBURGH, PA. 15222

APPROVED 3/10/08 DATE

DESIGNED	CTV
DRAWN	JWM - EPV
CHECKED	CTV
IN CHARGE	TGL
DATE	3/10/08
SCALE	AS SHOWN

PORT AUTHORITY OF ALLEGHENY COUNTY
PITTSBURGH PENNSYLVANIA

NORTH SHORE CONNECTOR
AERIAL STRUCTURE, RETAINED FILL, DEMOLITION OF MILLER PRINTING
DECK PLAN
SPAN 13

Port Authority

CONTRACT NO.	NSC-007	
DWG. NO.	ST097	SHT. 232

/final/gw/aerial/gw_st097.dgn 3/7/2008 6:17:13 PM

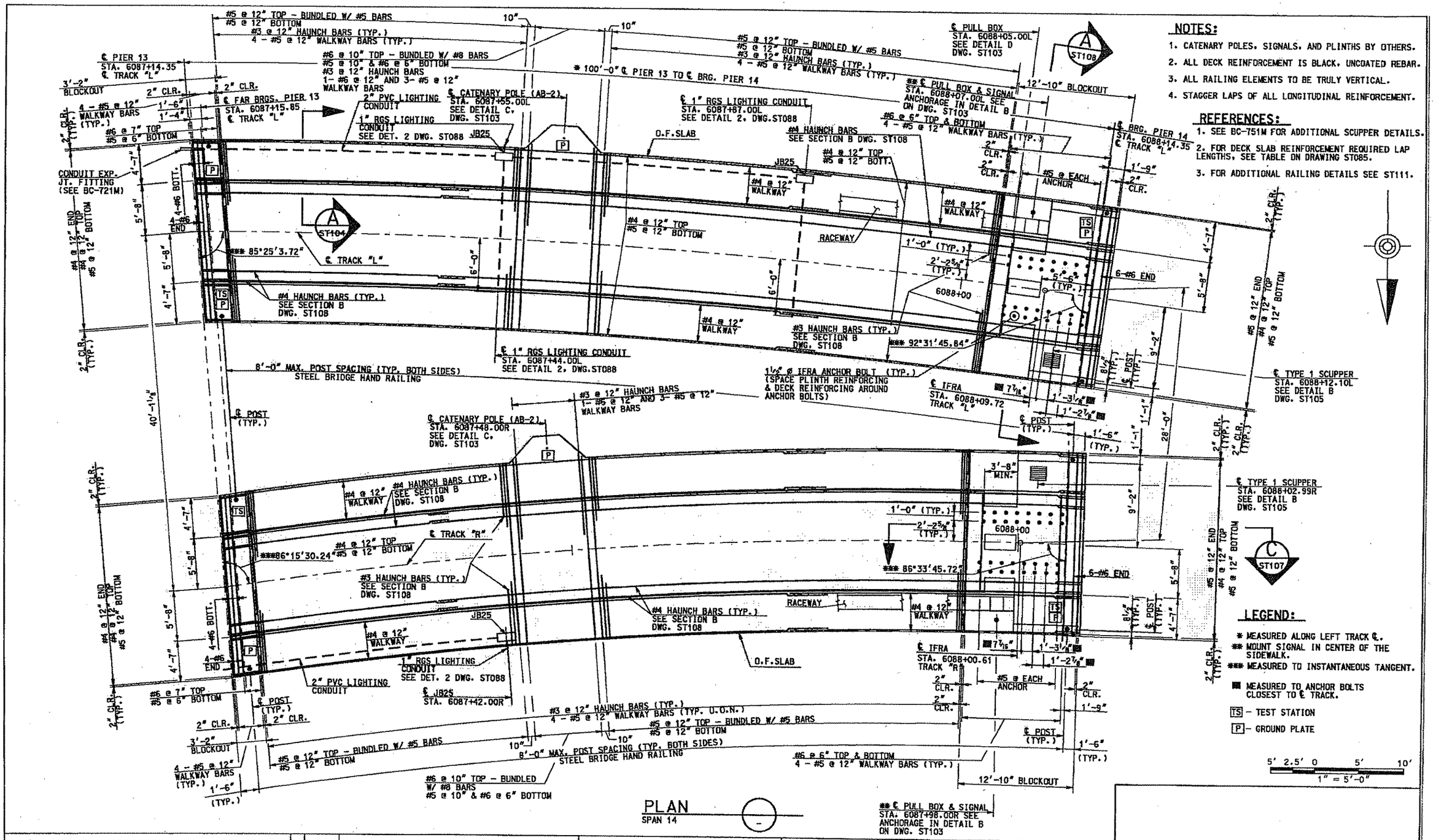

NOTES:

1. CATENARY POLES, SIGNALS, AND PLINTHS BY OTHERS.
2. ALL DECK REINFORCEMENT IS BLACK, UNCOATED REBAR.
3. ALL RAILING ELEMENTS TO BE TRULY VERTICAL.
4. STAGGER LAPS OF ALL LONGITUDINAL REINFORCEMENT.

REFERENCES:

1. SEE BC-751M FOR ADDITIONAL SCUPPER DETAILS.
2. FOR DECK SLAB REINFORCEMENT REQUIRED LAP LENGTHS, SEE TABLE ON DRAWING ST085.
3. FOR ADDITIONAL RAILING DETAILS SEE ST111.

LEGEND:

* MEASURED ALONG LEFT TRACK ℄.
** MOUNT SIGNAL IN CENTER OF THE SIDEWALK.
*** MEASURED TO INSTANTANEOUS TANGENT.
▩ MEASURED TO ANCHOR BOLTS CLOSEST TO ℄ TRACK.
TS - TEST STATION
P - GROUND PLATE

PLAN

SPAN 14

Gannett Fleming

GANNETT FLEMING, INC.
601 Holiday Drive
Foster Plaza III
Suite 200
Pittsburgh, PA. 15220

NO.	DATE	DESCRIPTION

REVISIONS

THE PREPARATION OF THIS DOCUMENT HAS BEEN FINANCED IN PART THROUGH A GRANT FROM THE FEDERAL TRANSIT ADMINISTRATION, U.S. DEPARTMENT OF TRANSPORTATION, UNDER THE URBAN MASS TRANSPORTATION ACT OF 1964, AS AMENDED. FOR THE PORT AUTHORITY OF ALLEGHENY COUNTY, PENNSYLVANIA.

THOMAS G. LEECH
SIGNATURE

DMJM HARRIS | AECOM
FOUR GATEWAY CENTER
20TH FLOOR
PITTSBURGH, PA. 15222

3/10/08
APPROVED DATE

DESIGNED	CTV
DRAWN	JWM - EPV
CHECKED	CTV
IN CHARGE	TGL
DATE	3/10/08
SCALE	AS SHOWN

PORT AUTHORITY OF ALLEGHENY COUNTY
PITTSBURGH PENNSYLVANIA

NORTH SHORE CONNECTOR
AERIAL STRUCTURE, RETAINED FILL, DEMOLITION OF MILLER PRINTING
DECK PLAN
SPAN 14

Port Authority

CONTRACT NO.	NSC-007
DWG. NO.	ST098
SHT.	233

/final/cgw/aerial/cgw st098.dgn 3/7/2008 6:17:25 AM

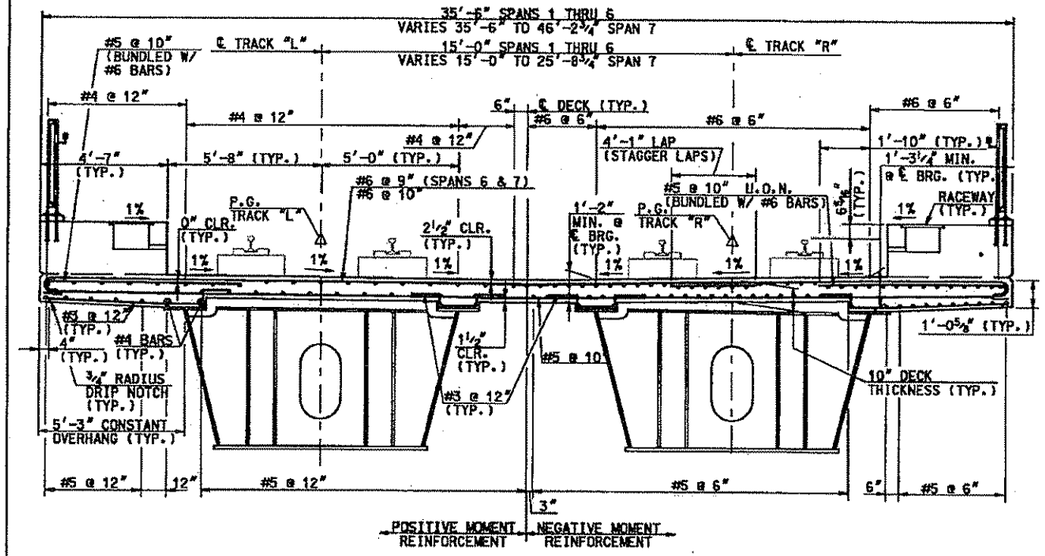

DECK TYPICAL SECTION – SPANS 1 THRU 7

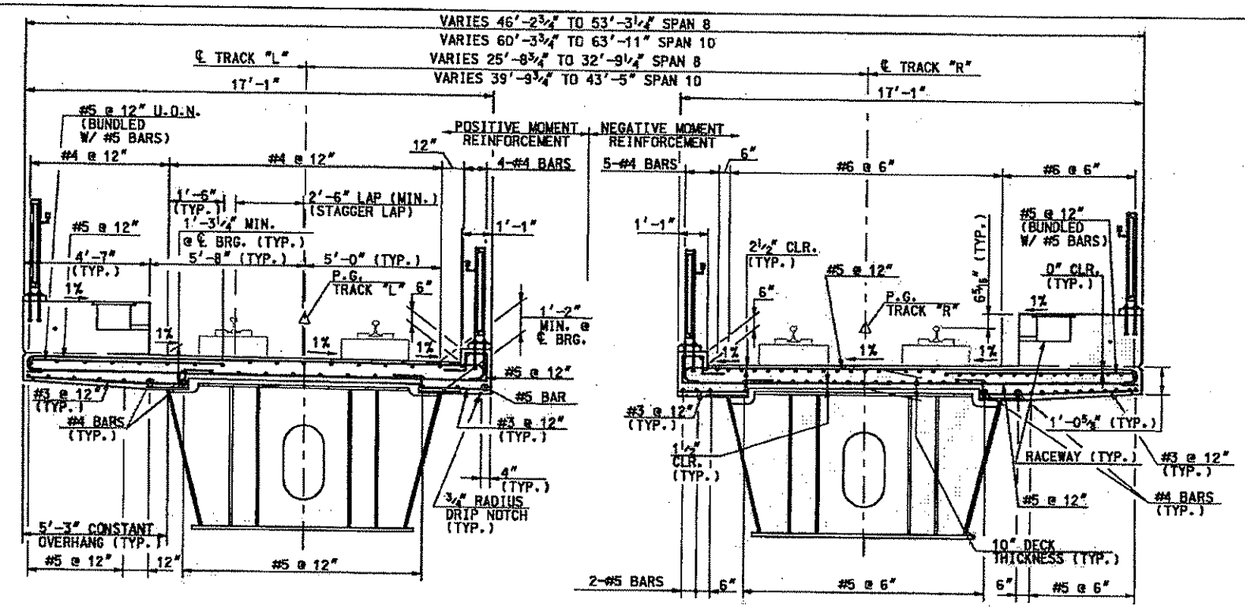

DECK TYPICAL SECTION – SPANS 8 & 10

STA. 6079+70.77 L TO STA. 6080+64.28 L
STA. 6082+60.28 L TO STA. 6083+60.77 L

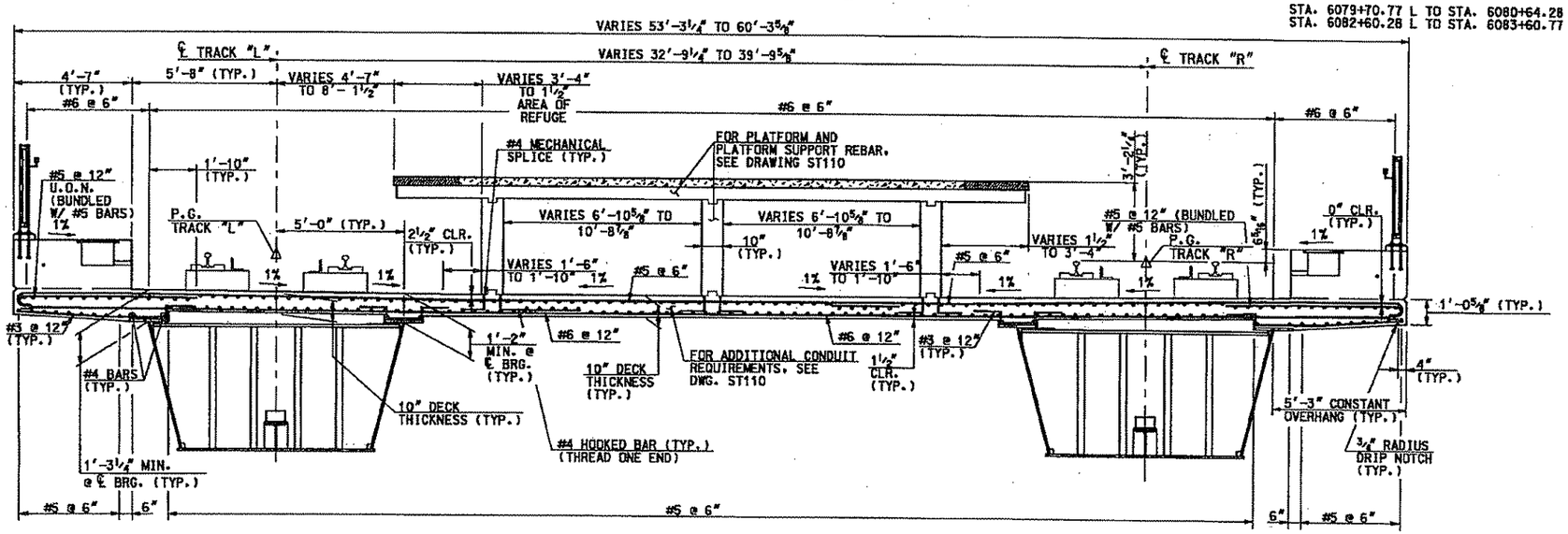

DECK TYPICAL SECTION – SPANS 8, 9 & 10

STA. 6080+64.28L TO STA. 6082+60.28L

NOTES:

1. ALL PLINTHS, PLINTH REINFORCEMENT, PLINTH ANCHORAGE, TRACK AND TRACK ELEMENTS BY OTHERS.
2. ALL DECK REINFORCEMENT IS UNCOATED, BLACK REBAR.
3. USE CLASS 5000 CEMENT CONCRETE FOR DECK SLAB, WALKWAYS AND PLATFORMS.
4. HAUNCH REINFORCEMENT IS NOT REQUIRED IF THE HAUNCH THICKNESS IS LESS THAN 3" ONCE ALL DEAD LOAD IS APPLIED.

REFERENCES:

1. FOR DECK PLAN SHEETS, SEE DRAWINGS ST085 THRU ST098.
2. FOR PLATFORM & PLATFORM SUPPORT REINFORCEMENT, SEE DRAWING ST110.
3. FOR TYPICAL SIDEWALK AND OVERHANG REINFORCEMENT, SEE SECTION A ON DRAWING ST104.
4. FOR PLINTH ANCHOR BARS, SEE DETAIL 1, DRAWING ST086.
5. FOR DECK SLAB POURING SEQUENCE SEE DRAWING ST100.

1' 0 2' 4' 7'
⅜" = 1'-0"

Gannett Fleming
GANNETT FLEMING, INC.
601 Holiday Drive
Foster Plaza III
Suite 200
Pittsburgh, PA. 15220

NO.	DATE	DESCRIPTION

REVISIONS

THE PREPARATION OF THIS DOCUMENT HAS BEEN FINANCED IN PART THROUGH A GRANT FROM THE FEDERAL TRANSIT ADMINISTRATION, U.S. DEPARTMENT OF TRANSPORTATION, UNDER THE URBAN MASS TRANSPORTATION ACT OF 1964, AS AMENDED, FOR THE PORT AUTHORITY OF ALLEGHENY COUNTY, PENNSYLVANIA.

COMMONWEALTH OF PENNSYLVANIA REGISTERED PROFESSIONAL THOMAS G. LEECH 021839 ENGINEER
SIGNATURE

DMJM HARRIS | AECOM
FOUR GATEWAY CENTER
20TH FLOOR
PITTSBURGH, PA. 15222
APPROVED — DATE 3/10/08

DESIGNED	CTV
DRAWN	JDM – EPV
CHECKED	CTV
IN CHARGE	TGL
DATE	3/10/08
SCALE	AS SHOWN

PORT AUTHORITY OF ALLEGHENY COUNTY
PITTSBURGH PENNSYLVANIA

NORTH SHORE CONNECTOR
AERIAL STRUCTURE, RETAINED FILL, DEMOLITION OF MILLER PRINTING
DECK TYPICALS
SHEET 1 OF 2

Port Authority

CONTRACT NO. NSC-007
DWG. NO. ST101 SHT. 235

$DATE$ $TIME$
$FILE$

/final/gw/aerial/gw st101.dgn 3/7/2008 6:17:46 AM

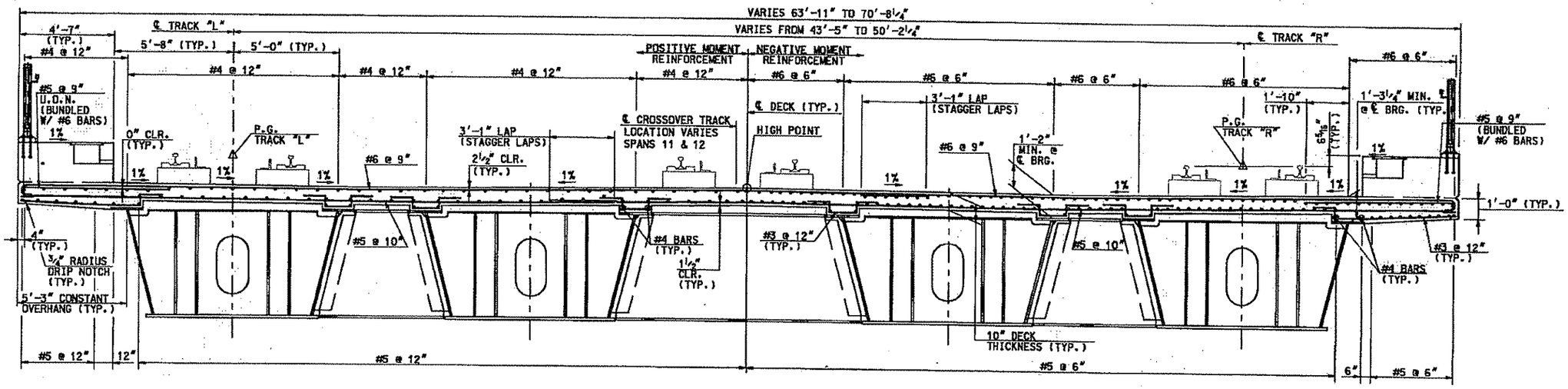

TYPICAL SECTION – SPANS 11 AND 12

(STA. 6083+61.35 LEFT TO STA. 6086+18.35 LEFT)

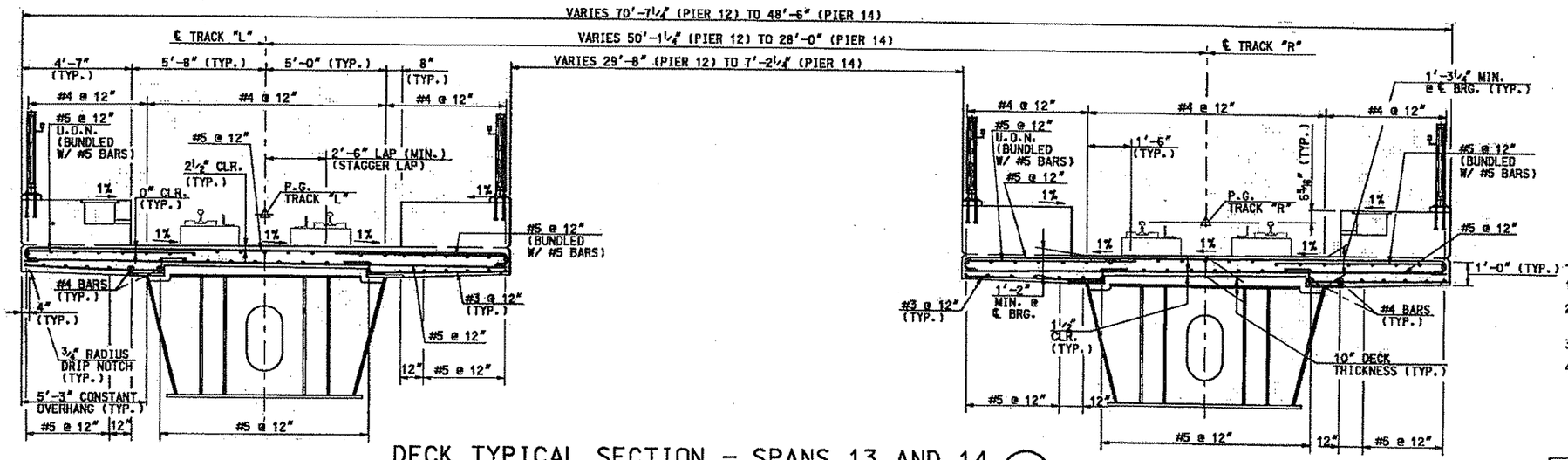

DECK TYPICAL SECTION – SPANS 13 AND 14

STA. 6086+18.35L TO STA. 6088+14.35L

NOTES:

1. ALL PLINTHS, PLINTH REINFORCEMENT, PLINTH ANCHORAGE, TRACK AND TRACK ELEMENTS BY OTHERS.
2. ALL DECK REINFORCEMENT IS UNCOATED, BLACK REBAR.
3. USE CLASS 5000 CEMENT CONCRETE FOR DECK SLAB, WALKWAYS AND PLATFORMS.
4. HAUNCH REINFORCEMENT IS NOT REQUIRED IF THE HAUNCH THICKNESS IS LESS THAN 3" ONCE ALL DEAD LOAD IS APPLIED.

REFERENCES:

1. FOR DECK PLAN SHEETS, SEE DRAWINGS ST085 THRU ST098.
2. FOR TYPICAL SIDEWALK AND OVERHANG REINFORCEMENT, SEE SECTION A ON DRAWING ST104.
3. FOR PLINTH ANCHOR BARS, SEE DETAIL A, DRAWING ST086.
4. FOR DECK SLAB POURING SEQUENCE, SEE DRAWING ST100.

1' 0 2' 4' 7'
3/8" = 1'-0"

Gannett Fleming
GANNETT FLEMING, INC.
601 Holiday Drive
Foster Plaza III
Suite 200
Pittsburgh, PA. 15220

NO.	DATE	DESCRIPTION

REVISIONS

THE PREPARATION OF THIS DOCUMENT HAS BEEN FINANCED IN PART THROUGH A GRANT FROM THE FEDERAL TRANSIT ADMINISTRATION, U.S. DEPARTMENT OF TRANSPORTATION, UNDER THE URBAN MASS TRANSPORTATION ACT OF 1964, AS AMENDED, FOR THE PORT AUTHORITY OF ALLEGHENY COUNTY, PENNSYLVANIA.

COMMONWEALTH OF PENNSYLVANIA REGISTERED PROFESSIONAL ENGINEER THOMAS G. LEECH

SIGNATURE

DMJM HARRIS | AECOM
FOUR GATEWAY CENTER
20TH FLOOR
PITTSBURGH, PA. 15222

APPROVED — DATE 3/10/08

DESIGNED	CTV
DRAWN	JWM – EPV
CHECKED	CTV
IN CHARGE	TGL
DATE	3/10/08
SCALE	AS SHOWN

PORT AUTHORITY OF ALLEGHENY COUNTY
PITTSBURGH PENNSYLVANIA

NORTH SHORE CONNECTOR
AERIAL STRUCTURE, RETAINED FILL, DEMOLITION OF MILLER PRINTING
DECK TYPICALS
SHEET 2 OF 2

Port Authority

CONTRACT NO.	NSC-007		
DWG. NO.	ST102	SHT.	237

/final/cmr/aerial/cmr st102.dgn 3/7/2008 6:17:59 AM

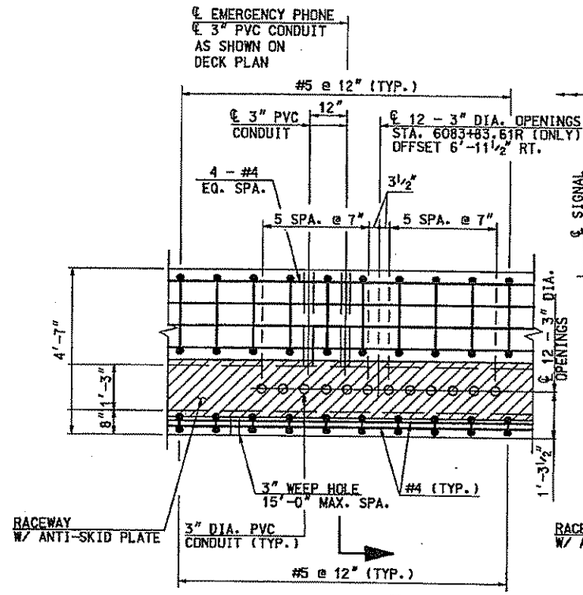

DETAIL A
EMERGENCY PHONE & TYPICAL SECTION
ST085

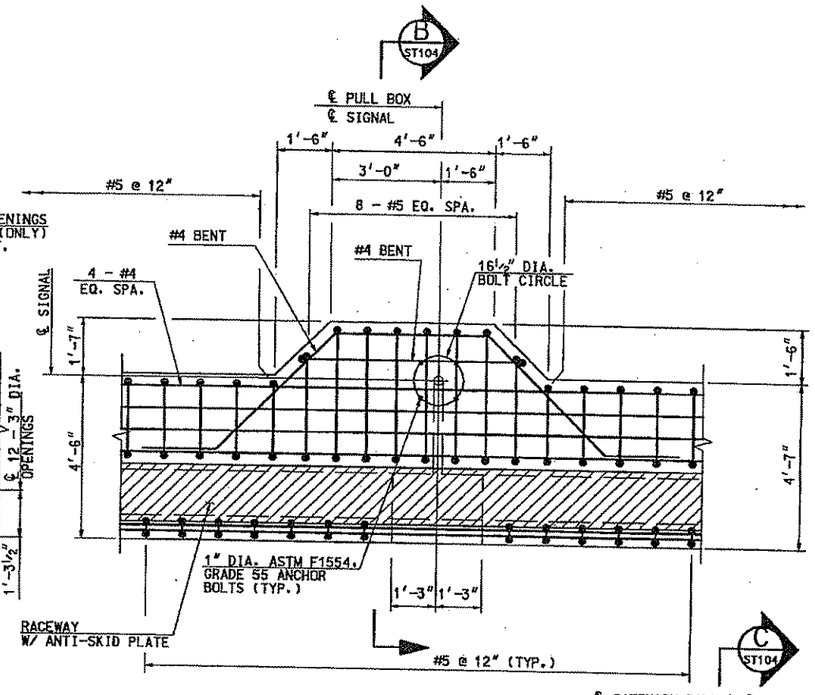

DETAIL B
PULL BOX & SIGNAL (11 REQUIRED)
ST085

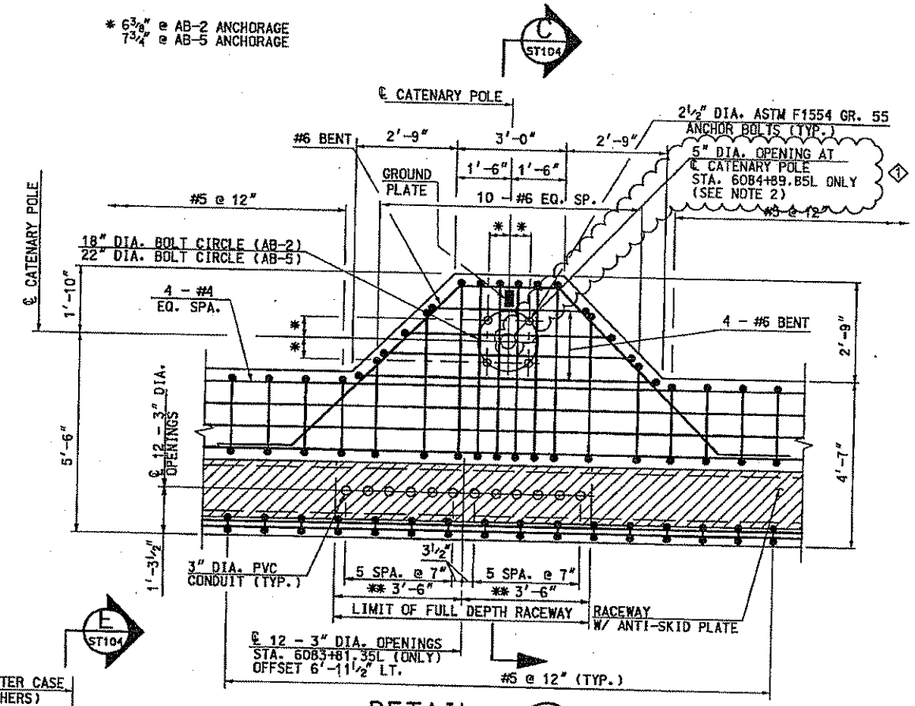

DETAIL C
CATENARY POLE
(AB-2 15 REQUIRED)
(AB-5 6 REQUIRED)
ST089

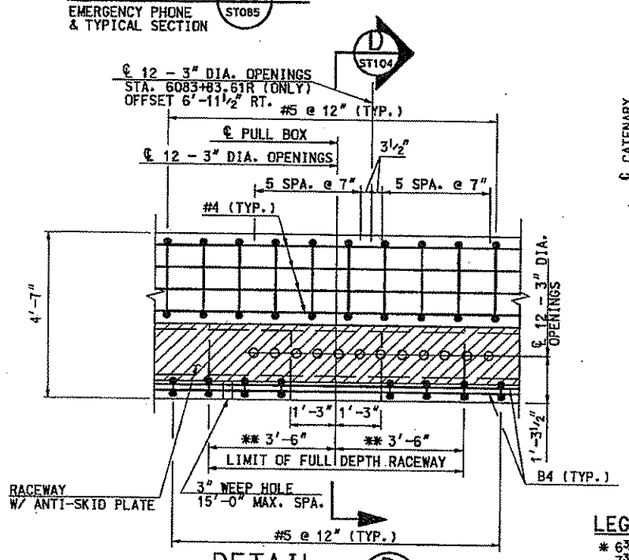

DETAIL D
PULL BOX
ST090

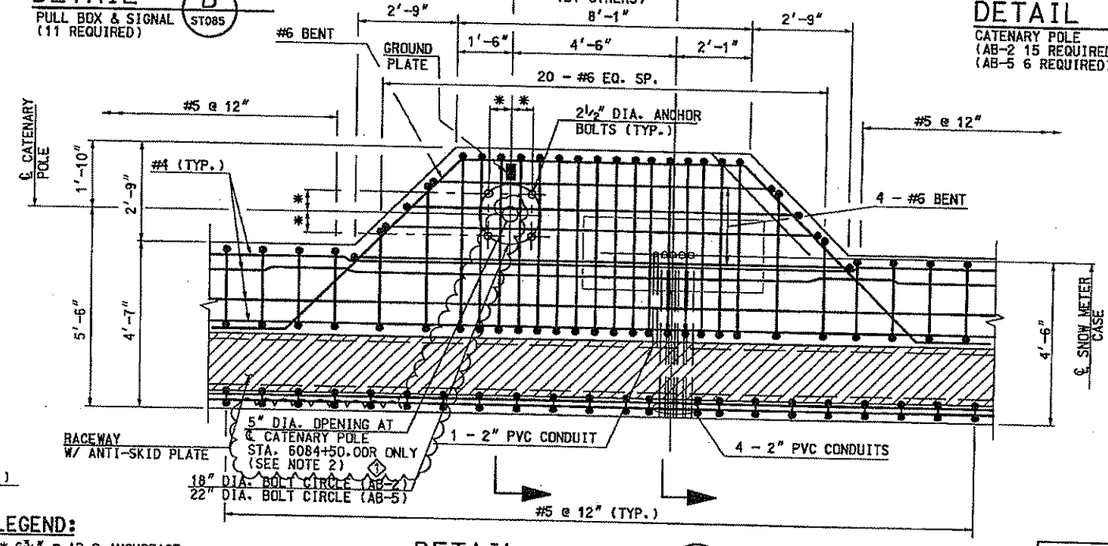

DETAIL E
CATENARY POLE & SNOW METER CASE
(AB-2 1 REQUIRED)
(AB-5 1 REQUIRED)
ST090

NOTE:

1. ALL BARS ON THIS SHEET TO HAVE 2" CLEARANCE UNLESS NOTED.
2. SPACE ALL REINFORCEMENT AROUND WEEP HOLES, ANCHOR BOLTS, OPENINGS AND CONDUIT. 1
3. ALL DECK & SIDEWALK REINFORCEMENT IS BLACK, UNCOATED REBAR.
4. RAILING POSTS NOT SHOWN FOR CLAIRITY.

REFERENCES:

1. FOR ADDITIONAL INFORMATION SEE DECK PLAN AND TYPICAL SECTIONS ON DRAWINGS ST085 THRU ST102.
2. FOR ADDITIONAL ANCHOR BOLT ASSEMBLY DETAILS, SEE DRAWING ST106.

LEGEND:

* 6⅜" @ AB-2 ANCHORAGE
7¾" @ AB-5 ANCHORAGE
** AT 12 - 3" DIA. OPENINGS ONLY

1'6" 0 1' 2' 3' 4' 5'
½" = 1'-0"

Gannett Fleming
GANNETT FLEMING, INC.
601 Holiday Drive
Foster Plaza III
Suite 200
Pittsburgh, PA. 15220

NO.	DATE	DESCRIPTION
1	4-16-08	ADDENDUM 1 - DRAWING MODIFIED

REVISIONS

THE PREPARATION OF THIS DOCUMENT HAS BEEN FINANCED IN PART THROUGH A GRANT FROM THE FEDERAL TRANSIT ADMINISTRATION, U.S. DEPARTMENT OF TRANSPORTATION, UNDER THE URBAN MASS TRANSPORTATION ACT OF 1964, AS AMENDED, FOR THE PORT AUTHORITY OF ALLEGHENY COUNTY, PENNSYLVANIA.

COMMONWEALTH OF PENNSYLVANIA REGISTERED PROFESSIONAL ENGINEER
THOMAS G. LEECH
SIGNATURE

DMJM HARRIS | AECOM
FOUR GATEWAY CENTER
20TH FLOOR
PITTSBURGH, PA. 15222
APPROVED 3/10/08 DATE

DESIGNED	CTV
DRAWN	JWM - EPV
CHECKED	CTV
IN CHARGE	TGL
DATE	3/10/08
SCALE	AS SHOWN

PORT AUTHORITY OF ALLEGHENY COUNTY
PITTSBURGH PENNSYLVANIA

NORTH SHORE CONNECTOR
AERIAL STRUCTURE, RETAINED FILLED, DEMOLITION OF MILLER PRINTING
DECK DETAILS
SHEET 1 OF 6

Port Authority

CONTRACT NO. NSC-007
DWG. NO. ST103 SHT. 238

/gas st103.dgn 4/15/2008 11:00:25 AM

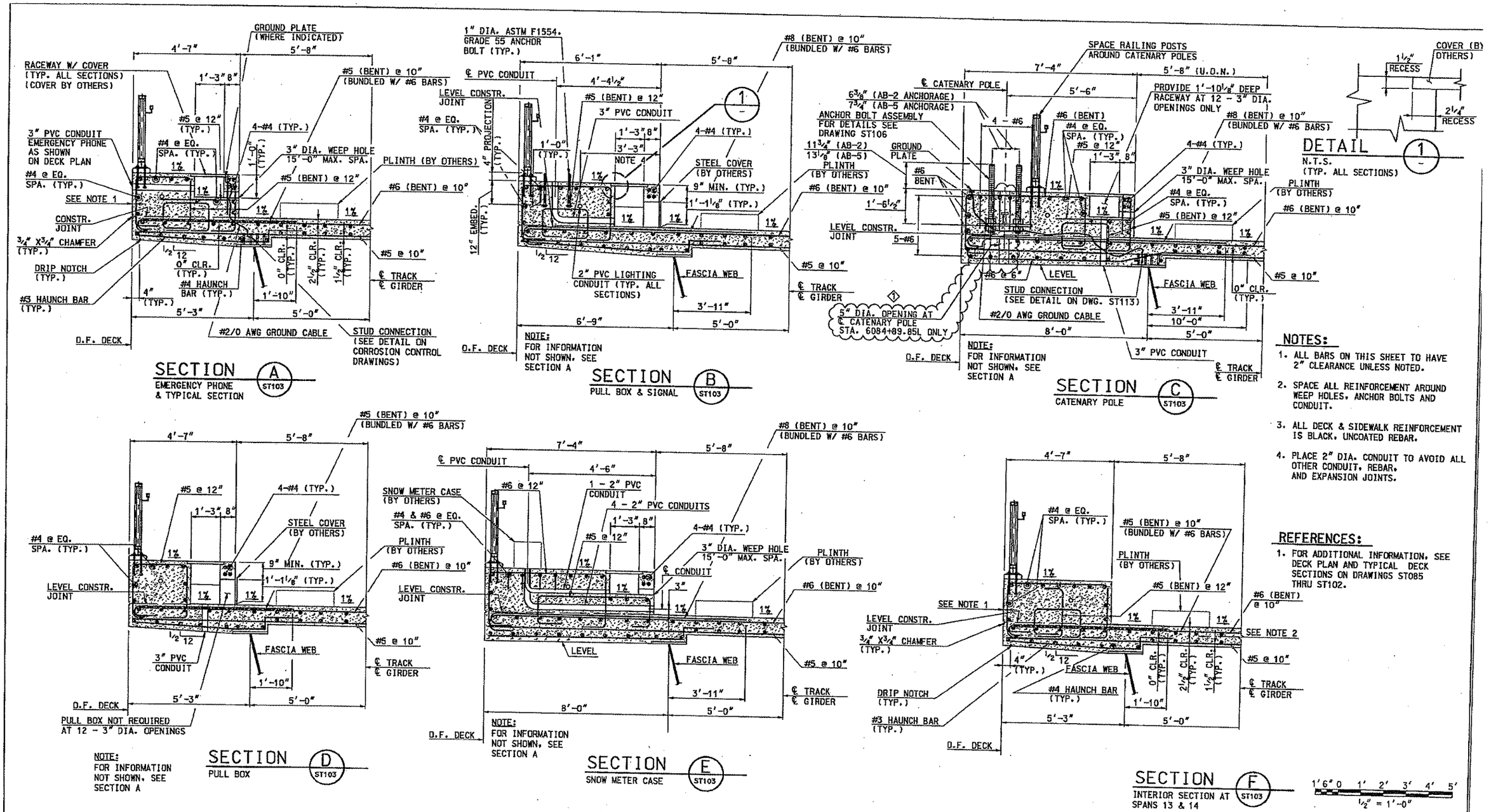

NOTES:

1. ALL BARS ON THIS SHEET TO HAVE 2" CLEARANCE UNLESS NOTED.
2. SPACE ALL REINFORCEMENT AROUND WEEP HOLES, ANCHOR BOLTS AND CONDUIT.
3. ALL DECK & SIDEWALK REINFORCEMENT IS BLACK, UNCOATED REBAR.
4. PLACE 2" DIA. CONDUIT TO AVOID ALL OTHER CONDUIT, REBAR, AND EXPANSION JOINTS.

REFERENCES:

1. FOR ADDITIONAL INFORMATION, SEE DECK PLAN AND TYPICAL DECK SECTIONS ON DRAWINGS ST085 THRU ST102.

Gannett Fleming

GANNETT FLEMING, INC.
601 Holiday Drive
Foster Plaza III
Suite 200
Pittsburgh, PA. 15220

NO.	DATE	DESCRIPTION
1	4-16-08	ADDENDUM 1 - DRAWING MODIFIED

REVISIONS

THE PREPARATION OF THIS DOCUMENT HAS BEEN FINANCED IN PART THROUGH A GRANT FROM THE FEDERAL TRANSIT ADMINISTRATION, U.S. DEPARTMENT OF TRANSPORTATION, UNDER THE URBAN MASS TRANSPORTATION ACT OF 1964, AS AMENDED, FOR THE PORT AUTHORITY OF ALLEGHENY COUNTY, PENNSYLVANIA.

COMMONWEALTH OF PENNSYLVANIA REGISTERED PROFESSIONAL ENGINEER THOMAS G. LEECH 021832-E
SIGNATURE

DMJM HARRIS | AECOM
FOUR GATEWAY CENTER
20TH FLOOR
PITTSBURGH, PA. 15222
APPROVED — DATE 3/10/08

DESIGNED	CTV
DRAWN	JWM - EPV
CHECKED	CTV
IN CHARGE	TGL
DATE	3/10/08
SCALE	AS SHOWN

PORT AUTHORITY OF ALLEGHENY COUNTY
PITTSBURGH PENNSYLVANIA

NORTH SHORE CONNECTOR
AERIAL STRUCTURE, RETAINED FILLED, DEMOLITION OF MILLER PRINTING
DECK DETAILS
SHEET 2 OF 6

Port Authority

CONTRACT NO. NSC-007
DWG. NO. ST104 SHT. 239

/gnw st104.dgn 4/15/2008 11:00:27 AM

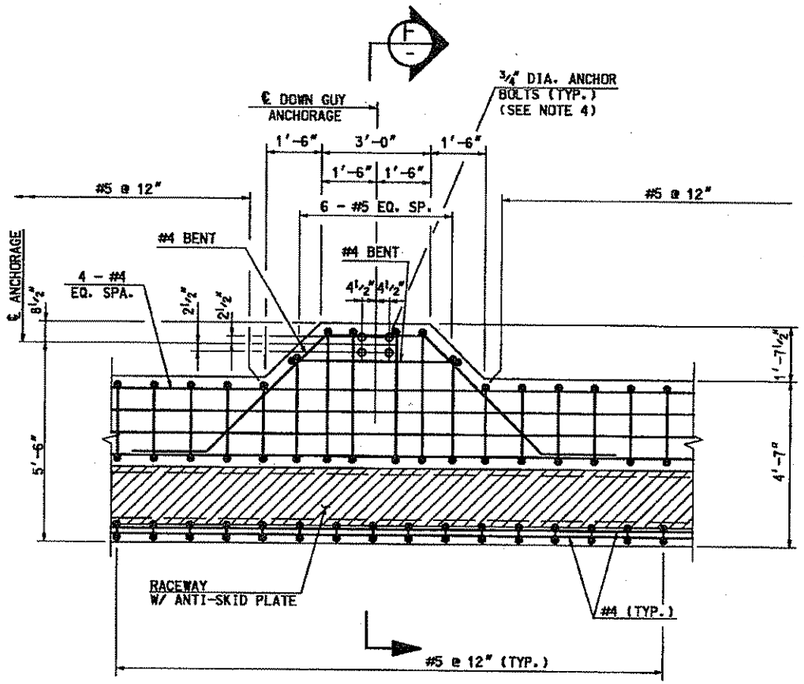

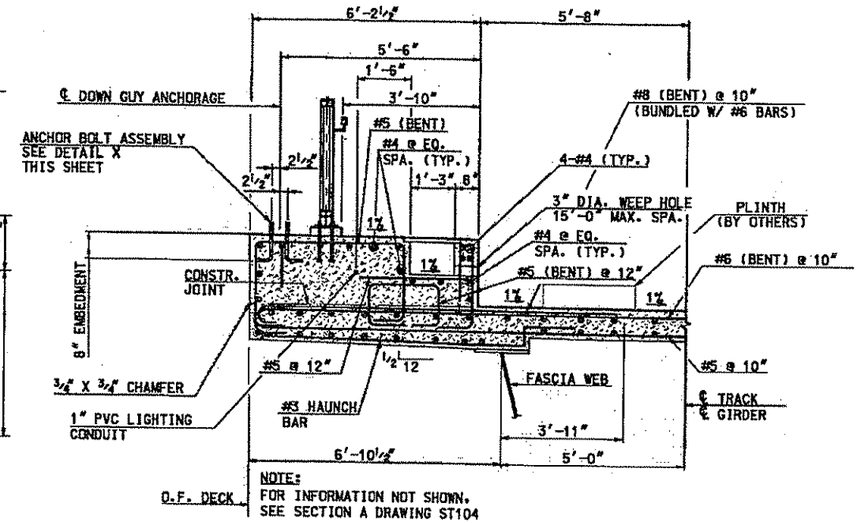

NOTE:
FOR INFORMATION NOT SHOWN, SEE SECTION A DRAWING ST104

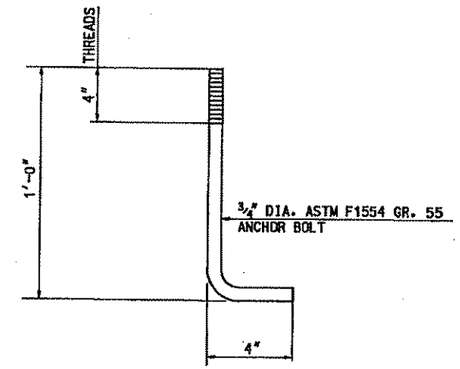

DETAIL X
ANCHOR BOLTS

0 1" 2" 3" 6" 1'-0"
3" = 1'-0"

1'6" 0 1' 2' 3' 4' 5'
1/2" = 1'-0"

DETAIL A ST089
DOWN GUY ANCHORAGE
(5 EXT. REQUIRED;
1 INT. REQUIRED)

SECTION F
DOWN GUY ANCHORAGE

1'6" 0 1' 2' 3' 4' 5'
1/2" = 1'-0"

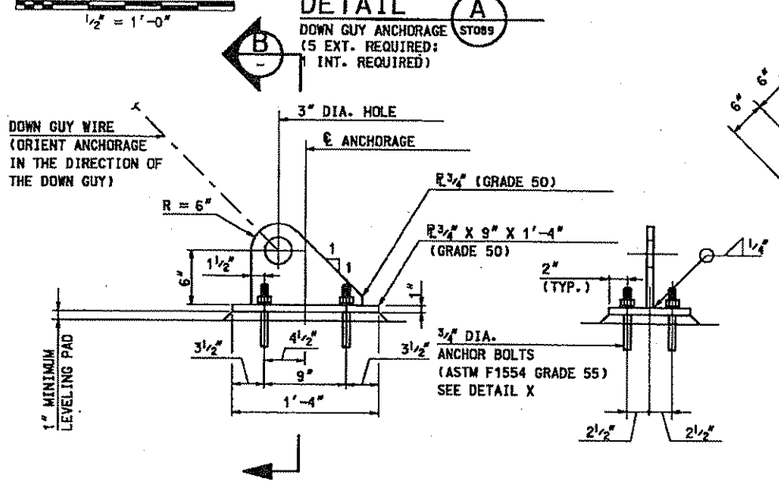

DETAIL Y ST091
DOWN GUY ANCHORAGE
(5 REQUIRED)

0 3" 6" 1' 2'
1 1/2" = 1'-0"

SECTION B

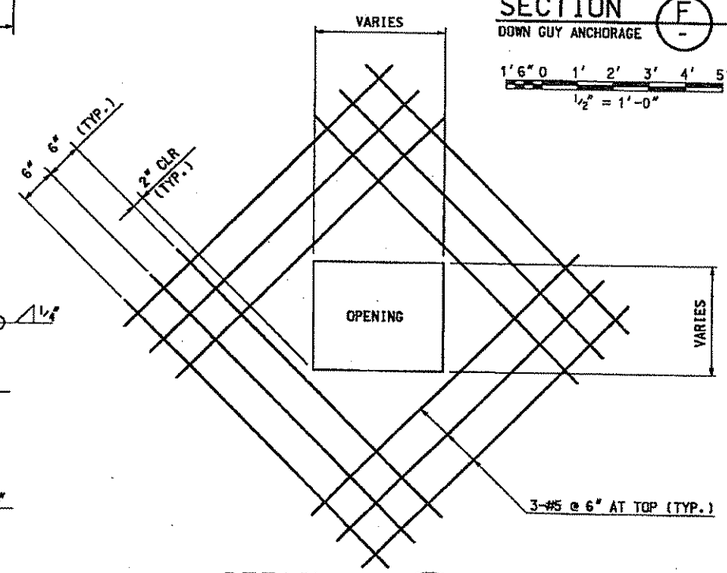

DETAIL B ST085
OPENING REINFORCEMENT

1' 6" 0 1' 2'
1" = 1'-0"

NOTE:

1. ALL BARS ON THIS SHEET TO HAVE 2" CLEARANCE UNLESS NOTED.
2. SPACE ALL REINFORCEMENT AROUND WEEP HOLES, ANCHOR BOLTS AND CONDUIT.
3. ALL DECK & SIDEWALK REINFORCEMENT IS BLACK, UNCOATED REBAR.
4. PLACE 1" DIA. CONDUIT VERTICALLY TO AVOID ALL OTHER CONDUIT, REBAR AND EXPANSION JOINTS.

REFERENCE:

1. FOR ADDITIONAL INFORMATION SEE DECK PLAN AND TYPICAL SECTIONS ON DRAWINGS ST085 THRU ST102.

Gannett Fleming
GANNETT FLEMING, INC.
601 Holiday Drive
Foster Plaza III
Suite 200
Pittsburgh, PA. 15220

NO.	DATE	DESCRIPTION

REVISIONS

THE PREPARATION OF THIS DOCUMENT HAS BEEN FINANCED IN PART THROUGH A GRANT FROM THE FEDERAL TRANSIT ADMINISTRATION, U.S. DEPARTMENT OF TRANSPORTATION, UNDER THE URBAN MASS TRANSPORTATION ACT OF 1964, AS AMENDED, FOR THE PORT AUTHORITY OF ALLEGHENY COUNTY, PENNSYLVANIA.

COMMONWEALTH OF PENNSYLVANIA REGISTERED PROFESSIONAL ENGINEER THOMAS G. LEECH 021630 ENGINEER
SIGNATURE

DMJM HARRIS | AECOM
FOUR GATEWAY CENTER
20TH FLOOR
PITTSBURGH, PA. 15222

APPROVED 3/10/08 DATE

DESIGNED	CTV
DRAWN	JWM - EPV
CHECKED	CTV
IN CHARGE	TGL
DATE	3/10/08
SCALE	AS SHOWN

PORT AUTHORITY OF ALLEGHENY COUNTY
PITTSBURGH PENNSYLVANIA

NORTH SHORE CONNECTOR
AERIAL STRUCTURE, RETAINED FILLED, DEMOLITION OF MILLER PRINTING
DECK DETAILS
SHEET 3 OF 6

Port Authority

CONTRACT NO. NSC-007
DWG. NO. ST105 SHT. 240

/final/cgw/aerial/cgw_st105.dgn 3/7/2008 6:18:35 AM

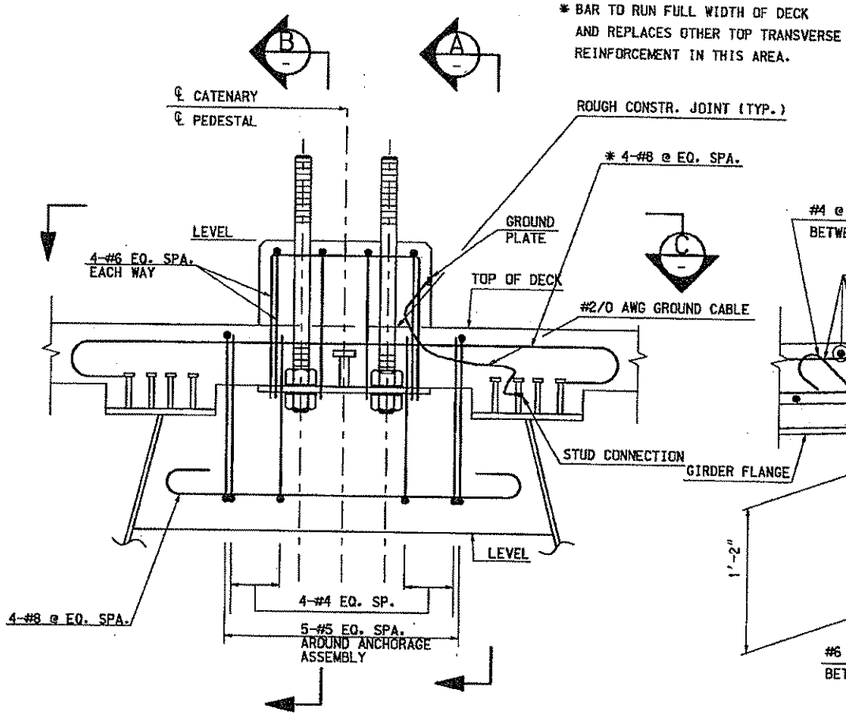

DETAIL 1 (ST085)
N.T.S.
(AB-2 5 REQUIRED)
(AB-5 1 REQUIRED)

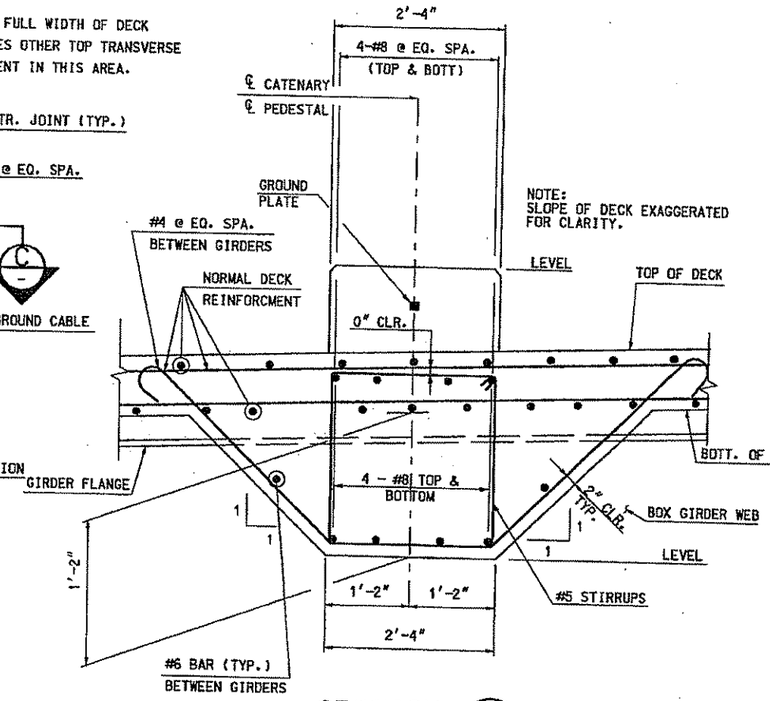

SECTION A
N.T.S.

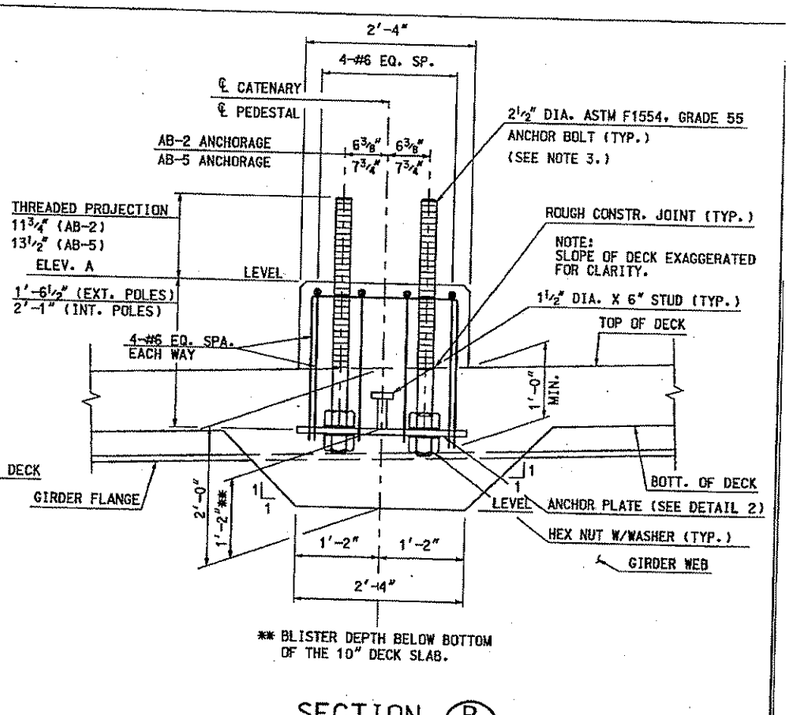

SECTION B

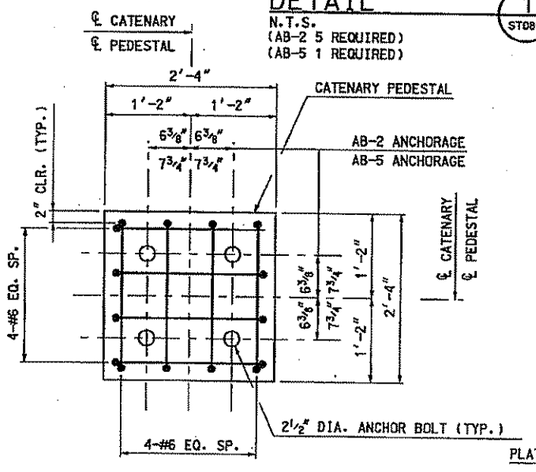

VIEW C

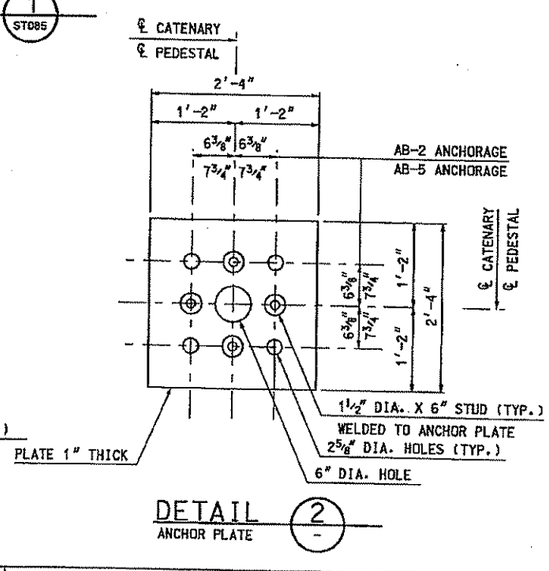

DETAIL 2
ANCHOR PLATE

CATENARY PEDESTAL TABLE

PEDESTAL No.	STATION	TOP/RAIL ELEV.	ELEV. A
1	6070+72.00L	745.32	745.85
2	6071+93.00L	754.52	755.05
3	6073+17.77L	760.69	761.22
4	6074+52.00L	762.06	762.59
5	6075+76.27L	762.68	763.21
6	6079+45.00L	764.52	765.05
7	6084+89.85L	762.47	763.00

1

REFERENCE:

1. FOR ALL CATENARY POLE LOCATIONS, SEE DECK PLAN DWGS. ST085 THRU ST102 AND RETAINED FILL PLAN ON DWG. ST023.
2. FOR ADDITIONAL DETAILS FOR SIDEWALK CATENARY ANCHORAGES, SEE DWGS. ST103 & ST104.

NOTES:

1. INTERIOR PEDESTAL CATENARY ANCHORAGE SHOWN. EXTERIOR CATENARY ANCHORAGE SIMILAR.
2. ALL DECK & PEDESTAL REINFORCEMENT IS BLACK, UNCOATED REBAR.
3. CONTRACTOR TO PROVIDE PROTECTION OF EXPOSED ANCHOR BOLTS DURING CONSTRUCTION.

1' 6" 0 1' 2'
1" = 1'-0"

Gannett Fleming
GANNETT FLEMING, INC.
601 Holiday Drive
Foster Plaza III
Suite 200
Pittsburgh, PA. 15220

NO.	DATE	DESCRIPTION
1	4-16-08	ADDENDUM 1 - DRAWING MODIFIED

REVISIONS

THE PREPARATION OF THIS DOCUMENT HAS BEEN FINANCED IN PART THROUGH A GRANT FROM THE FEDERAL TRANSIT ADMINISTRATION, U.S. DEPARTMENT OF TRANSPORTATION, UNDER THE URBAN MASS TRANSPORTATION ACT OF 1964, AS AMENDED, FOR THE PORT AUTHORITY OF ALLEGHENY COUNTY, PENNSYLVANIA.

COMMONWEALTH OF PENNSYLVANIA REGISTERED PROFESSIONAL ENGINEER THOMAS G. LEECH 021831-E
SIGNATURE

DMJM HARRIS | AECOM
FOUR GATEWAY CENTER
20TH FLOOR
PITTSBURGH, PA. 15222
APPROVED 3/10/08 DATE

DESIGNED	CTV
DRAWN	JWM - EPV
CHECKED	CTV
IN CHARGE	TGL
DATE	3/10/08
SCALE	AS SHOWN

PORT AUTHORITY OF ALLEGHENY COUNTY
PITTSBURGH PENNSYLVANIA

NORTH SHORE CONNECTOR
AERIAL STRUCTURE, RETAINED FILLED, DEMOLITION OF MILLER PRINTING
DECK DETAILS
SHEET 4 OF 6

Port Authority

CONTRACT NO.	NSC-007
DWG. NO.	ST106
SHT.	241

/gw st106.dgn 4/15/2008 11:00:29 AM

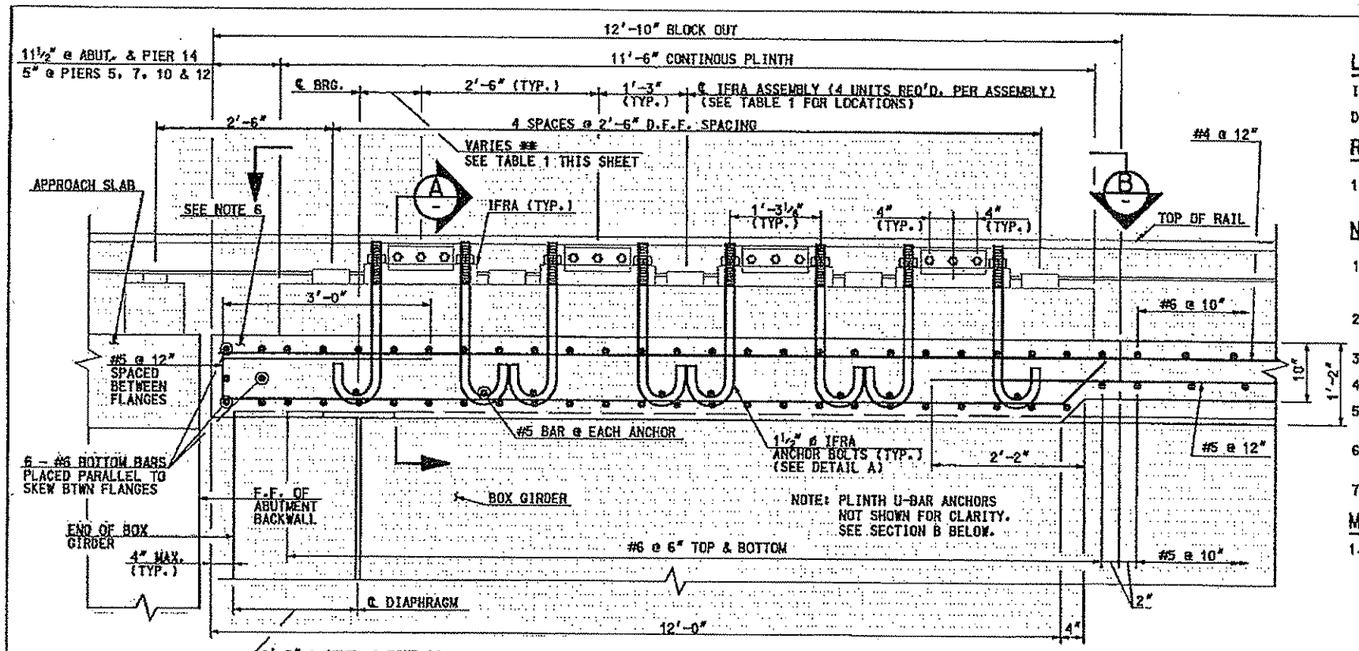

SECTION C (ST085)

LEGEND:

IFRA = INSULATED FIXED RAIL ANCHORAGE ASSEMBLY

D.F.F. = DIRECT FIXATION FASTENERS

REFERENCES:

1. FOR ADDITIONAL INFORMATION, SEE DECK PLAN DRAWINGS ST085, ST090, ST091, ST094, ST095, ST096, ST098

NOTES:

1. PLINTHS, PLINTH REINFORCEMENT, PLINTH ANCHORAGE, DIRECT FIXATION FASTENERS (DFF) AND RAIL ANCHORAGE ASSEMBLED BY OTHERS.
2. IFRA AND DECK DETAILS SHOWN FOR ABUTMENT AND PIER 14, OTHER LOCATIONS SIMILAR.
3. USE A TEMPLATE TO SET ANCHOR BOLTS.
4. ORIENT IFRA ANCHORS TO PROVIDE A MINIMUM 1½" CLEAR BETWEEN HOOKS.
5. SPACE LONGITUDINAL REBAR TO PROVIDE ONE BAR IN CONCTACT WITH EACH IFRA ANCHOR BOLT. WELD BARS TOGETHER AT EACH CONTACT POINT.
6. STRIP SEAL EXPANSION JOINT NOT SHOWN FOR CLARITY. SEE SECTION D ON SHEET ST108 AND BC-767N FOR ADDITIONAL DETAILS.
7. NUTS AND WASHERS WILL BE PROVIDED WITH NSC-009 CONTRACT.

MATERIAL:

1. ANCHOR BOLTS: ASTM F1554, GRADE 55.

TABLE 1 – IFRA ASSEMBLY LOCATION SCHEDULE

ASSEMBLY NO.	STATION	OFFSET	**
1	6070+63.15 L	-2.72'	10.5"
2	6070+63.15 L	+2.72'	10.5"
3	6070+63.15 L	+12.28'	10.5"
4	6070+63.15 L	+17.72'	10.5"
5	6077+11.02 L	-2.72'	12.0"
6	6077+11.02 L	+2.72'	12.0"
7	6077+11.02 L	+12.28'	12.0"
8	6077+11.02 L	+17.72'	12.0"
9	6079+64.52 L	-2.72'	12.0"
10	6079+64.52 L	+2.72'	12.0"
11	6079+66.63 R	-2.72'	13.125"
12	6079+66.63 R	+2.72'	21.125"
13	6083+55.10 L	-2.72'	12.0"
14	6083+55.10 L	+2.72'	12.0"
15	6083+69.86 R	-2.72'	12.0"
16	6083+69.86 R	+2.72'	12.0"
17	6086+12.10 L	-2.72'	12.0"
18	6086+12.10 L	+2.72'	12.0"
19	6086+11.25 R	-2.72'	12.0"
20	6086+11.25 R	+2.72'	12.0"
21	6088+09.72 L	-2.72'	15.0"
22	6088+09.72 L	+2.72'	15.0"
23	6088+00.27 R	-2.72'	15.0"
24	6088+00.27 R	+2.72'	15.0"

** DISTANCE FROM THE ℄ BEARING TO THE 1ST IFRA (SEE SECTION A)

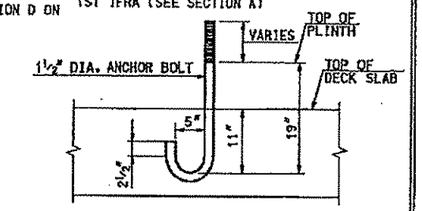

ANCHOR DETAIL 1

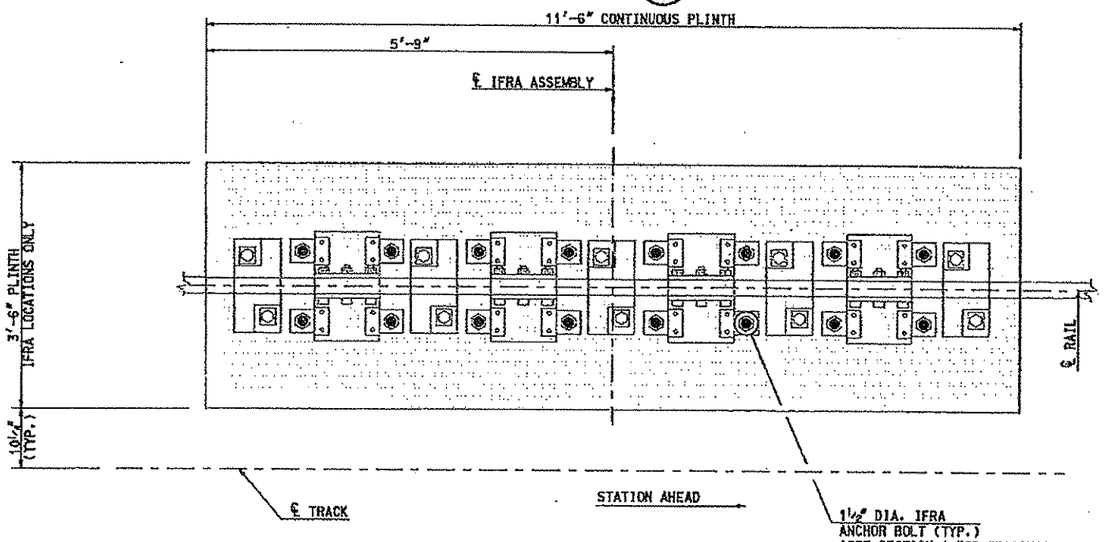

VIEW B (24 REQUIRED)

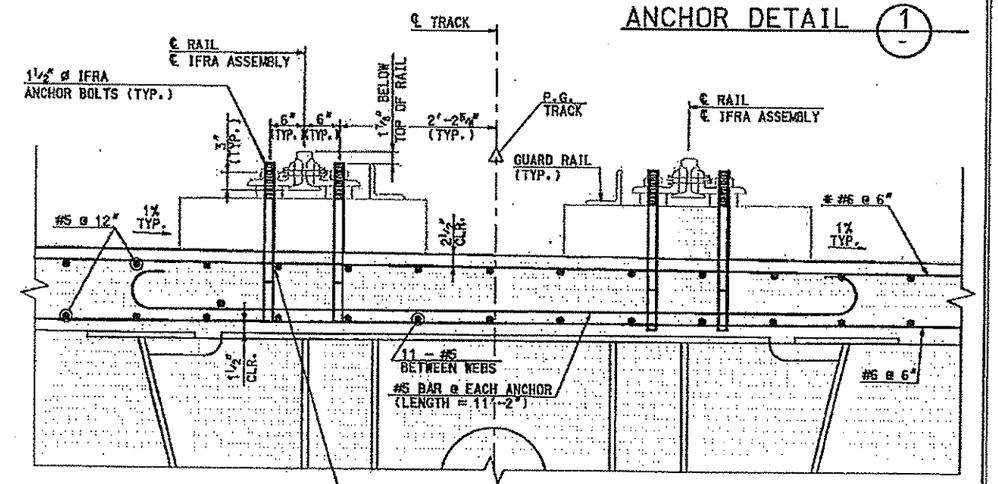

SECTION A

* PROVIDE 180° HOOKS AT OVERHANG ENDS.

1' 6" 0 1' 2'
1" = 1'-0"

Gannett Fleming

GANNETT FLEMING, INC.
601 Holiday Drive
Foster Plaza III
Suite 200
Pittsburgh, PA. 15220

NO.	DATE	DESCRIPTION

REVISIONS

THE PREPARATION OF THIS DOCUMENT HAS BEEN FINANCED IN PART THROUGH A GRANT FROM THE FEDERAL TRANSIT ADMINISTRATION, U.S. DEPARTMENT OF TRANSPORTATION, UNDER THE URBAN MASS TRANSPORTATION ACT OF 1964, AS AMENDED, FOR THE PORT AUTHORITY OF ALLEGHENY COUNTY, PENNSYLVANIA.

THOMAS G. LEECH
SIGNATURE

DMJM HARRIS | AECOM
FOUR GATEWAY CENTER
20TH FLOOR
PITTSBURGH, PA. 15222
APPROVED 3/10/08 DATE

DESIGNED	CTV
DRAWN	JWM - EPV
CHECKED	CTV
IN CHARGE	TGL
DATE	3/10/08
SCALE	AS SHOWN

PORT AUTHORITY OF ALLEGHENY COUNTY
PITTSBURGH PENNSYLVANIA

NORTH SHORE CONNECTOR
AERIAL STRUCTURE, RETAINED FILLED, DEMOLITION OF MILLER PRINTING
DECK DETAILS
SHEET 5 OF 6

Port Authority

CONTRACT NO. NSC-007
DWG. NO. ST107 SHT. 242

#DATE# #TIME#
#FILE#

/final/cgw/aerial/cgw st107.dgn 3/7/2008 6:18:56 PM

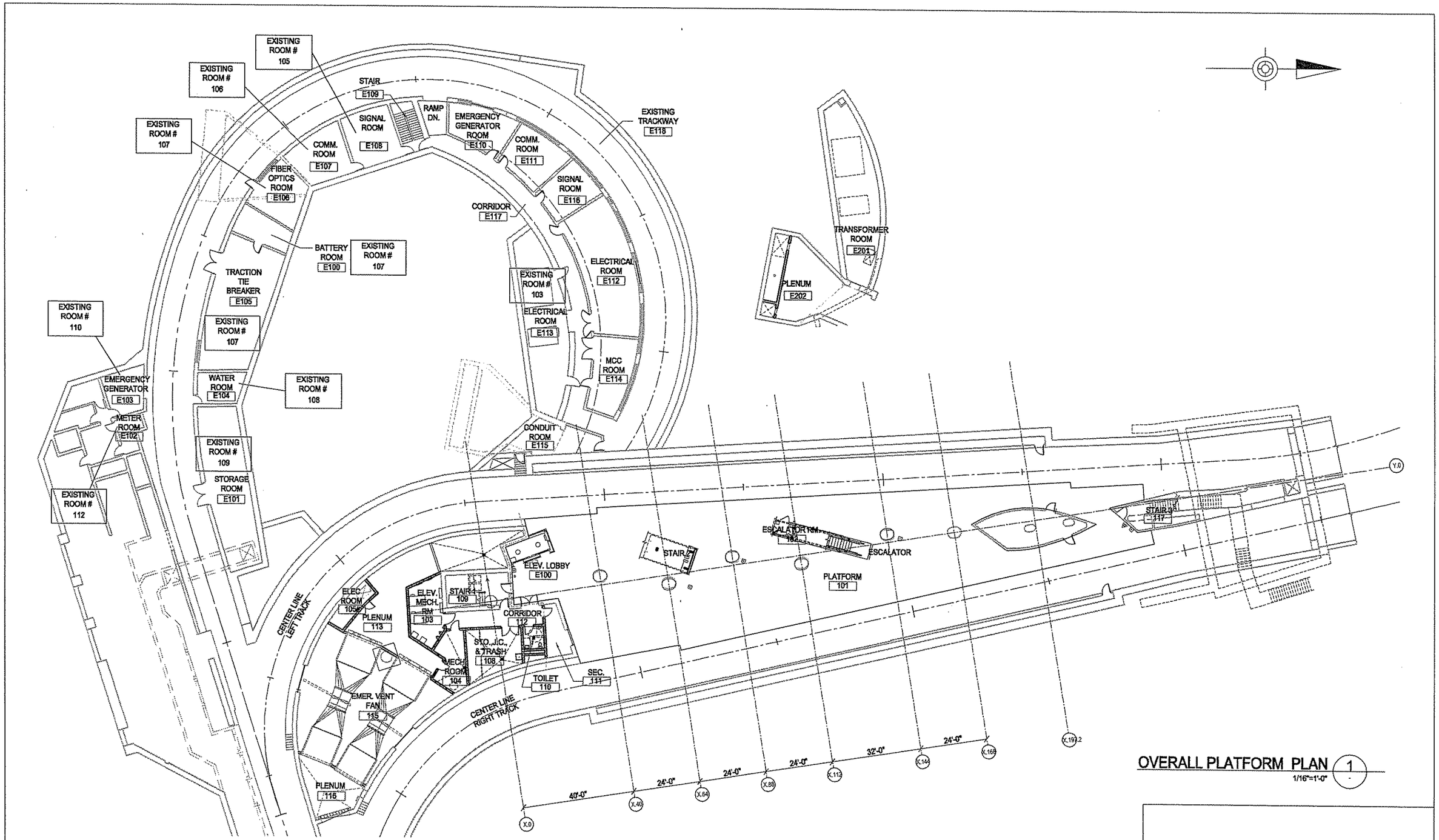

OVERALL PLATFORM PLAN (1)

1/16"=1'-0"

The light motion Collaborative
EDGE studio and Hoffmann & Associates

EDGE studio
5415 Penn Avenue
Pittsburgh, PA 15206
tel 412/345.9005
fax 412/345.5006

Hoffmann & Associates
223 Fourth Avenue
Pittsburgh, PA 15222
tel 412/471.2470
fax 412/471.2472

NO.	DATE	DESCRIPTION

REVISIONS

THE PREPARATION OF THIS DRAWING HAS BEEN FINANCED, IN PART, THROUGH A GRANT FROM THE U. S. DEPARTMENT OF TRANSPORTATION, FEDERAL TRANSIT ADMINISTRATION UNDER THE URBAN MASS TRANSPORTATION ACT OF 1964, AS AMENDED.

APPROVED FOR CONSTRUCTION

DMJM HARRIS | AECOM
FOUR GATEWAY CENTER
20TH FLOOR
PITTSBURGH, PA. 15222

APPROVED 4/29/08 DATE

DESIGNED	LMC
DRAWN	JMG/CFB
CHECKED	MGF
IN CHARGE	RSP
DATE APRIL 29, 2008	
SCALE 1/16"=1'-0"	
16' 8' 0 16'	

PORT AUTHORITY OF ALLEGHENY COUNTY
PITTSBURGH PENNSYLVANIA

NORTH SHORE CONNECTOR
GATEWAY STATION FINISHES
EXISTING LOOP ROOM NUMBERS
REF. NSC-009 CONTRACT

Port Authority
connecting people to life

CONTRACT NO.	NSC-010G
DWG. NO. AR004	SHT. 60A

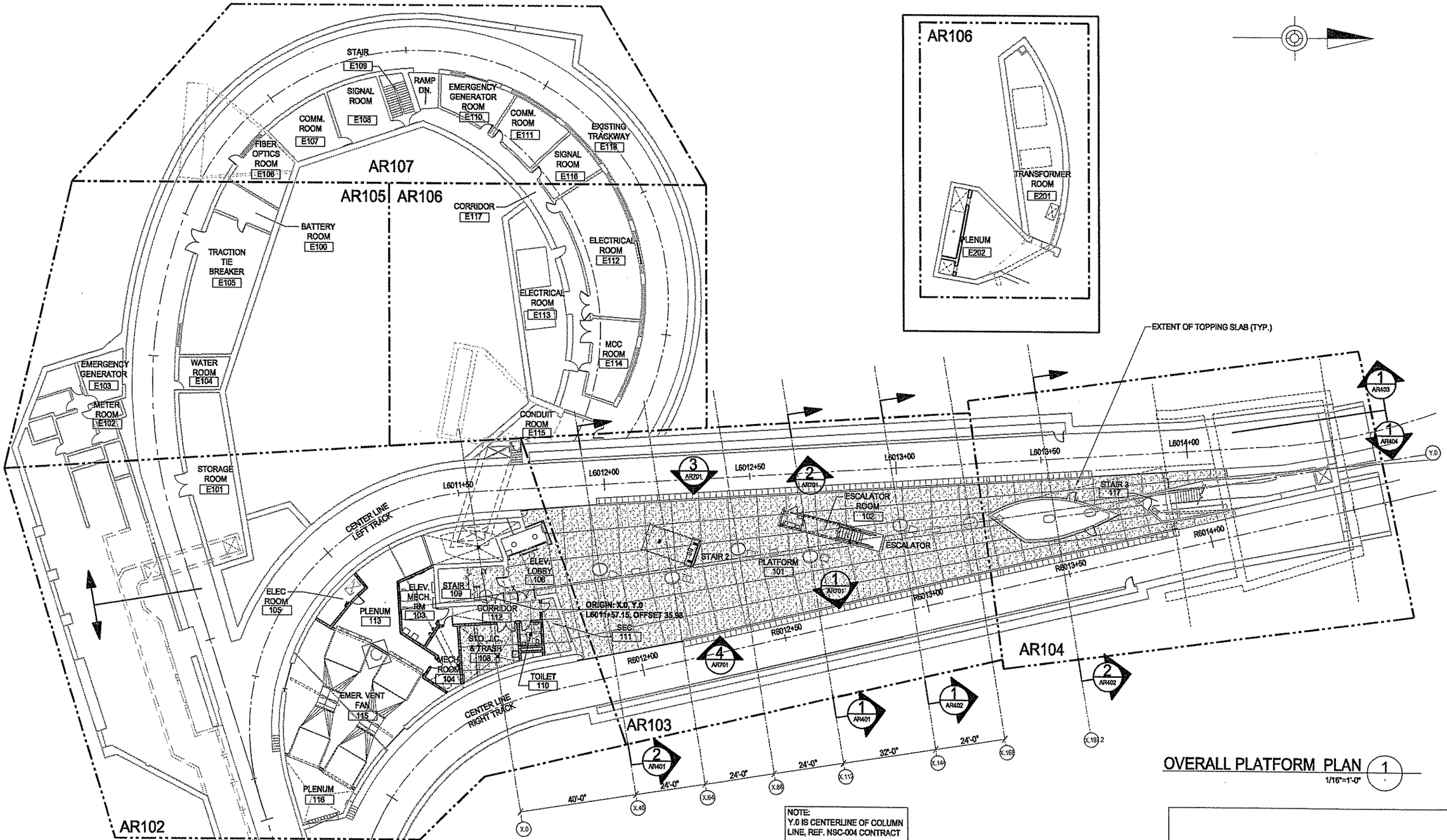

NOTE:
Y.0 IS CENTERLINE OF COLUMN LINE, REF. NSC-004 CONTRACT

OVERALL PLATFORM PLAN (1)

1/16"=1'-0"

The light motion Collaborative
EDGE studio and Pfaffmann & Associates

EDGE studio
5411 Penn Avenue
Pittsburgh PA 15206
tel: 412.945.5005
fax: 412.945.5006

Pfaffmann & Associates
225 Fourth Avenue
Pittsburgh, PA 15222
tel: 412.471.2470
fax: 412.471.2472

NO.	DATE	DESCRIPTION

REVISIONS

THE PREPARATION OF THIS DRAWING HAS BEEN FINANCED, IN PART, THROUGH A GRANT FROM THE U. S. DEPARTMENT OF TRANSPORTATION, FEDERAL TRANSIT ADMINISTRATION UNDER THE URBAN MASS TRANSPORTATION ACT OF 1964, AS AMENDED.

SIGNATURES

DMJM HARRIS | AECOM
FOUR GATEWAY CENTER
20TH FLOOR
PITTSBURGH, PA. 15222

APPROVED — DATE 4/29/08

DESIGNED	LMC
DRAWN	JMG
CHECKED	MGF
IN CHARGE	RSP
DATE	APRIL 29, 2008
SCALE	1/16"=1'-0"

16' 8' 0 16'

PORT AUTHORITY OF ALLEGHENY COUNTY
PITTSBURGH PENNSYLVANIA

NORTH SHORE CONNECTOR
GATEWAY STATION FINISHES
OVERALL PLATFORM & EXISTING LOOP PLAN

Port Authority
connecting people to life

CONTRACT NO. NSC-010G
DWG. NO. AR101 SHT. 61

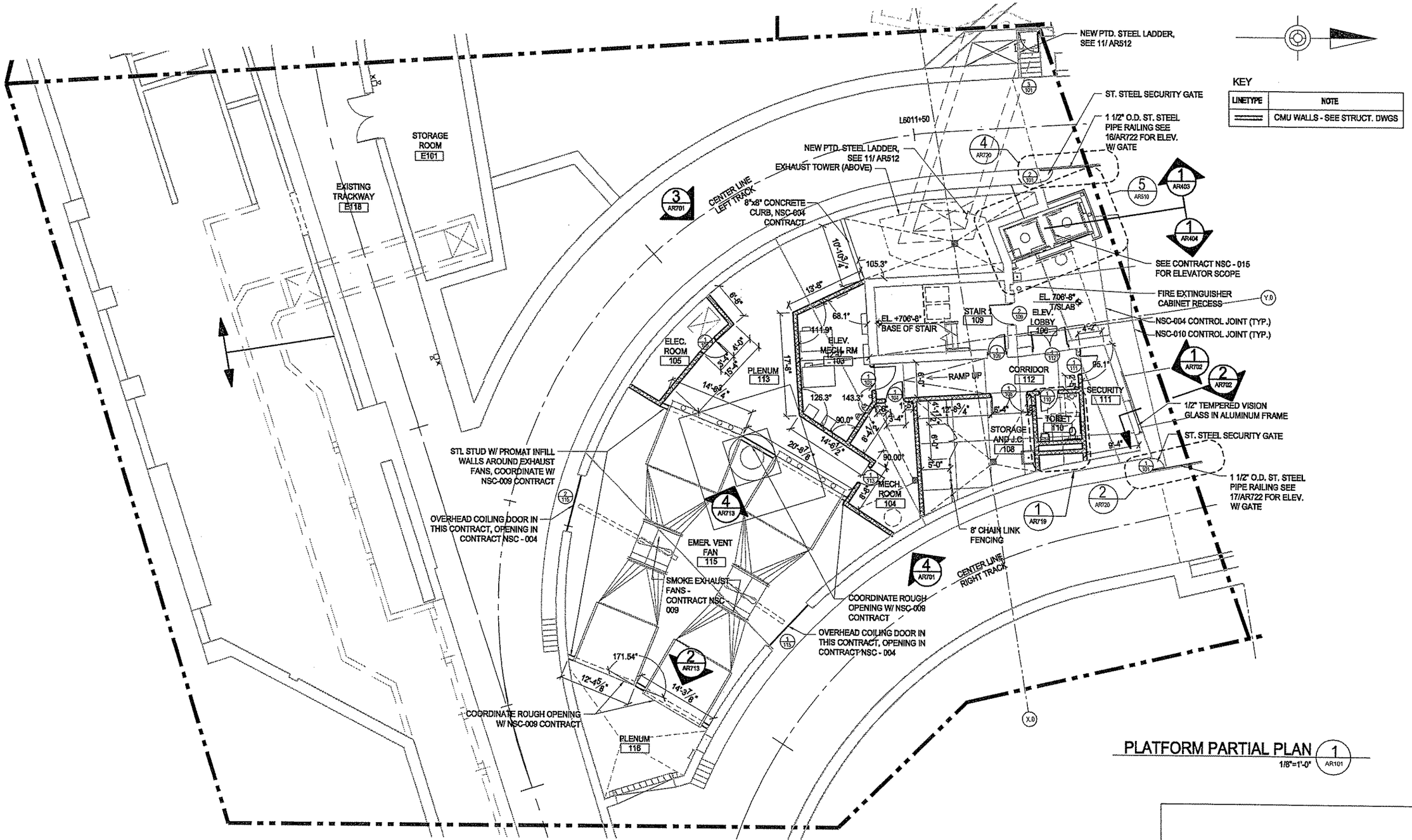

PLATFORM PARTIAL PLAN (1 / AR101)

1/8"=1'-0"

The light Emotion Collaborative
EDGE studio
5411 Penn Avenue
Pittsburgh, PA 15206
tel: 412/343-5000
fax: 412/343-5008

Plattmann & Associates
325 Fourth Avenue
Pittsburgh, PA 15222
tel: 412/471-2410
fax: 412/471-2412

NO.	DATE	DESCRIPTION

REVISIONS

THE PREPARATION OF THIS DRAWING HAS BEEN FINANCED, IN PART, THROUGH A GRANT FROM THE U. S. DEPARTMENT OF TRANSPORTATION, FEDERAL TRANSIT ADMINISTRATION UNDER THE URBAN MASS TRANSPORTATION ACT OF 1964, AS AMENDED.

SIGNATURE

DMJM HARRIS | AECOM
FOUR GATEWAY CENTER
20TH FLOOR
PITTSBURGH, PA. 15222

APPROVED — DATE 4/29/08

DESIGNED	LMC
DRAWN	JMG
CHECKED	MGF
IN CHARGE	RSP
DATE	APRIL 29, 2008
SCALE	1/8"=1'-0"

8' 4' 0 8'

PORT AUTHORITY OF ALLEGHENY COUNTY
PITTSBURGH PENNSYLVANIA

NORTH SHORE CONNECTOR
GATEWAY STATION FINISHES
PLATFORM PLAN PARTIAL 1 cut el. +708'-0"

Port Authority
connecting people to life

CONTRACT NO. NSC-010G
DWG. NO. AR102 SHT. 62

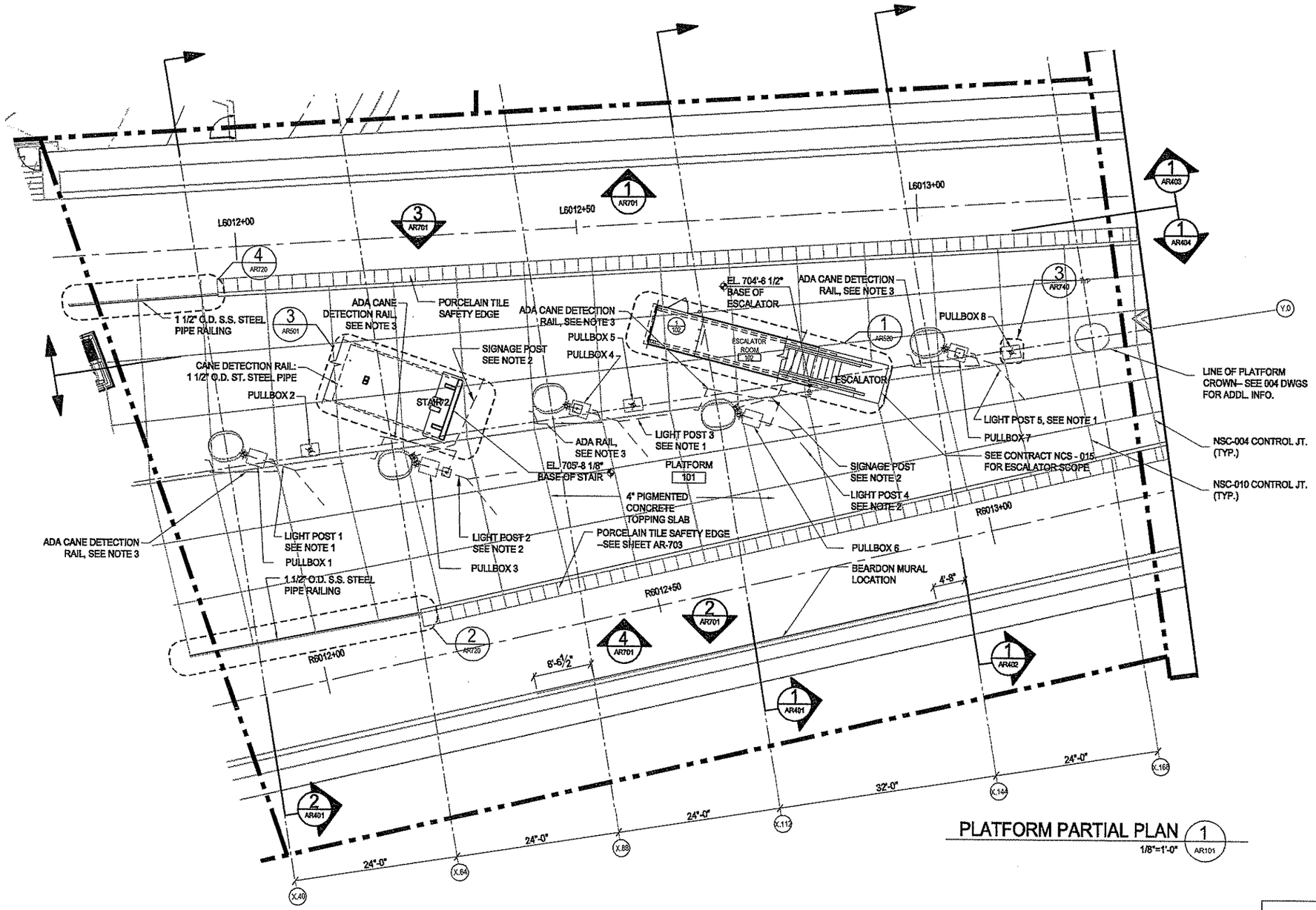

NOTES:

1. LIGHT POST OMITTED FOR CLARITY. SEE 1/AR740 FOR LIGHT POST DETAILS, LOCATION, AND ORIENTATION
2. LIGHT POST AND SIGNAGE POST OMITTED FOR CLARITY. SEE 2/AR740 FOR POST DETAILS, LOCATION, AND ORIENTATION
3. ADA CANE DETECTION RAIL OMITTED FOR CLARITY. SEE AR755 FOR DETAILS AND LOCATIONS.

PLATFORM PARTIAL PLAN 1 (AR101)

1/8"=1'-0"

The light *motion* Collaborative
EDGE studio and Hoffmann & Associates

EDGE studio
5411 Penn Avenue
Pittsburgh, PA 15206
tel: 412.243.3000
fax: 412.243.3008

Hoffmann & Associates
225 Fourth Avenue
Pittsburgh, PA 15222
tel: 412.471.2470
fax: 412.471.2472

NO.	DATE	DESCRIPTION

REVISIONS

THE PREPARATION OF THIS DRAWING HAS BEEN FINANCED, IN PART, THROUGH A GRANT FROM THE U. S. DEPARTMENT OF TRANSPORTATION, FEDERAL TRANSIT ADMINISTRATION UNDER THE URBAN MASS TRANSPORTATION ACT OF 1964, AS AMENDED.

PA REGISTRATION NO. 032012

DMJM HARRIS | AECOM
FOUR GATEWAY CENTER
20TH FLOOR
PITTSBURGH, PA. 15222

APPROVED 4/29/08 DATE

DESIGNED	LMC
DRAWN	JMG
CHECKED	MGF
IN CHARGE	RSP
DATE APRIL 29, 2008	
SCALE 1/8"=1'-0"	

8' 4' 0 8'

PORT AUTHORITY OF ALLEGHENY COUNTY
PITTSBURGH PENNSYLVANIA

NORTH SHORE CONNECTOR
GATEWAY STATION FINISHES
PLATFORM PLAN PARTIAL 2 cut el. +708'-0"

Port Authority
connecting people to life

CONTRACT NO. NSC-010G
DWG. NO. AR103 SHT. 63

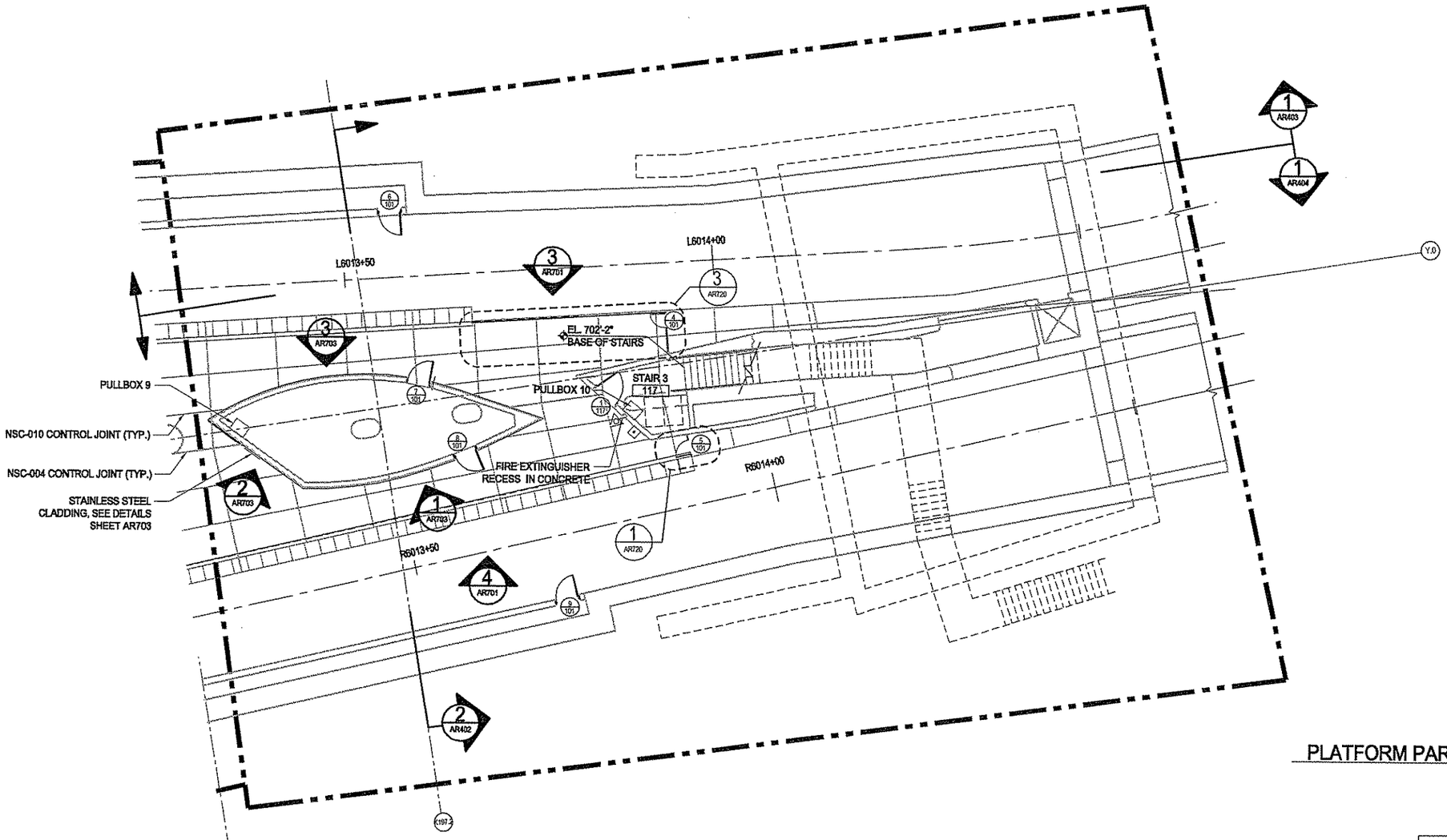

PLATFORM PARTIAL PLAN (1 / AR101)

1/8"=1'-0"

The light imotion Collaborative
EDGE studio and Pfaffmann & Associates

EDGE studio
5415 Penn Avenue
Pittsburgh, PA. 15206
tel: 412.245.5000
fax: 412.245.5006

Pfaffmann & Associates
222 Fourth Avenue
Pittsburgh, PA. 15222
tel: 412.471.2470
fax: 412.471.2472

NO.	DATE	DESCRIPTION

REVISIONS

THE PREPARATION OF THIS DRAWING HAS BEEN FINANCED, IN PART, THROUGH A GRANT FROM THE U. S. DEPARTMENT OF TRANSPORTATION, FEDERAL TRANSIT ADMINISTRATION UNDER THE URBAN MASS TRANSPORTATION ACT OF 1964, AS AMENDED.

APRIL 29, 2008

DMJM HARRIS | AECOM
FOUR GATEWAY CENTER
20TH FLOOR
PITTSBURGH, PA. 15222

APPROVED 4/29/08 DATE

DESIGNED	LMC
DRAWN	JMG
CHECKED	MGF
IN CHARGE	RSP
DATE APRIL 29, 2008	
SCALE 1/8"=1'-0"	

8' 4' 0 8'

PORT AUTHORITY OF ALLEGHENY COUNTY
PITTSBURGH PENNSYLVANIA

NORTH SHORE CONNECTOR
GATEWAY STATION FINISHES
PLATFORM PLAN PARTIAL 3 cut el. +708'-0"

Port Authority
connecting people to life

CONTRACT NO.	NSC-010G		
DWG. NO.	AR104	SHT.	64

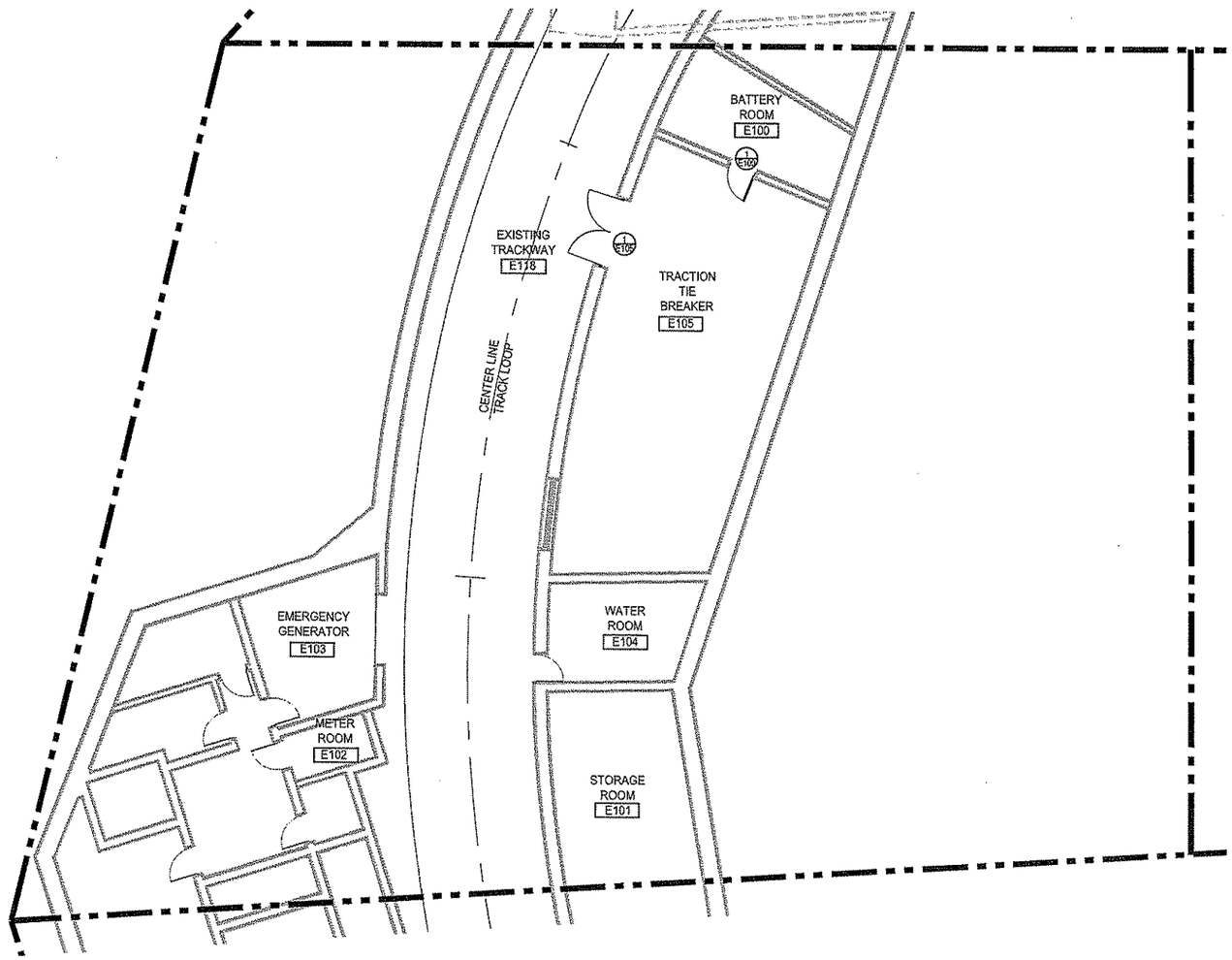

PLATFORM PARTIAL PLAN 1 AR105
1/8"=1'-0"

The light/motion Collaborative
EDGE studio and Pfaffmann & Associates

EDGE studio
5411 Penn Avenue
Pittsburgh, PA 15206
tel. 412/945.5005
fax: 412/945.5006

Pfaffmann & Associates
323 Fourth Avenue
Pittsburgh, PA 15222
tel: 412/471.2470
fax: 412/471.2472

NO.	DATE	DESCRIPTION

REVISIONS

THE PREPARATION OF THIS DRAWING HAS BEEN FINANCED, IN PART, THROUGH A GRANT FROM THE U. S. DEPARTMENT OF TRANSPORTATION, FEDERAL TRANSIT ADMINISTRATION UNDER THE URBAN MASS TRANSPORTATION ACT OF 1964, AS AMENDED.

SIGNATURE

DMJM HARRIS | AECOM
FOUR GATEWAY CENTER
20TH FLOOR
PITTSBURGH, PA. 15222

APPROVED 4/29/08 DATE

DESIGNED	LMC
DRAWN	JMG
CHECKED	MGF
IN CHARGE	RSP
DATE APRIL 29, 2008	
SCALE 1/8"=1'-0"	

8' 4' 0 8'

PORT AUTHORITY OF ALLEGHENY COUNTY
PITTSBURGH PENNSYLVANIA

NORTH SHORE CONNECTOR
GATEWAY STATION FINISHES
PLATFORM PLAN PARTIAL 4 cut el. +708'-0"

Port Authority
connecting people to life

CONTRACT NO. NSC-010G
DWG. NO. AR105 SHT. 65

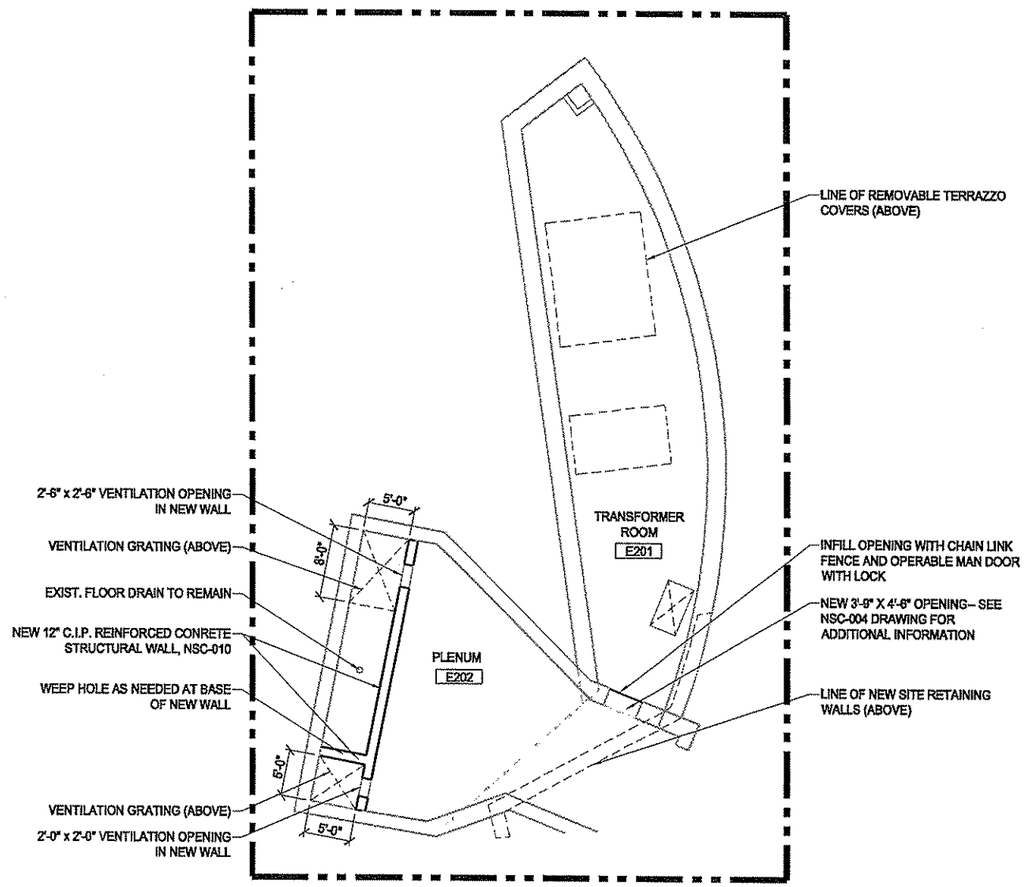

TRANSFORMER ROOM PLAN (2)
cut el. +723'-8" 1/8"=1'-0" AR101

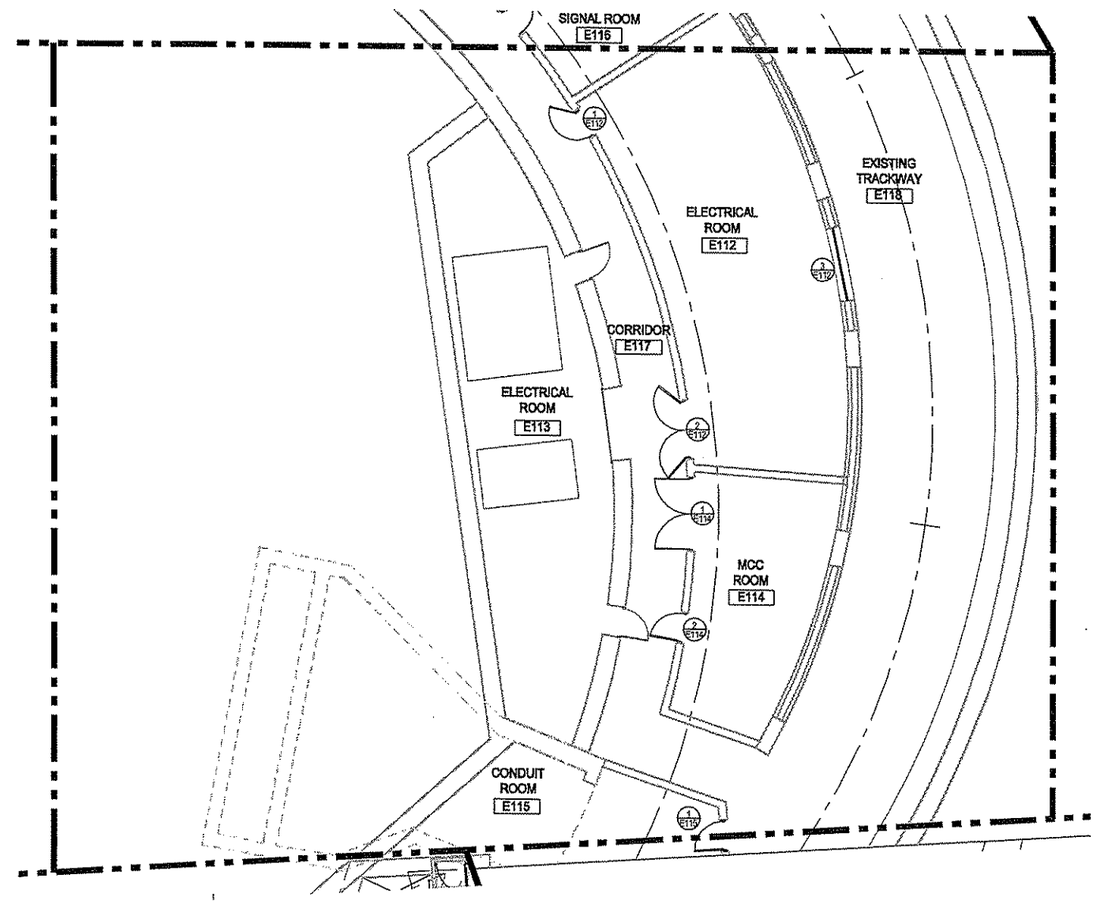

PLATFORM PARTIAL PLAN (1)
1/8"=1'-0" AR101

The light Imotion Collaborative
EDGE studio and PfeiffmanE Associates

EDGE studio
3415 Penn Avenue
Pittsburgh, PA 15201
tel 412/343-5005
fax 412/343-5006

PfeiffmanE Associates
223 Fourth Avenue
Pittsburgh, PA 15222
tel 412/471-2470
fax 412/471-2472

NO.	DATE	DESCRIPTION

REVISIONS

THE PREPARATION OF THIS DRAWING HAS BEEN FINANCED, IN PART, THROUGH A GRANT FROM THE U. S. DEPARTMENT OF TRANSPORTATION, FEDERAL TRANSIT ADMINISTRATION UNDER THE URBAN MASS TRANSPORTATION ACT OF 1964, AS AMENDED.

REGISTERED ARCHITECT
PITTSBURGH, PENNSYLVANIA
4/29/2008

DMJM HARRIS | AECOM
FOUR GATEWAY CENTER
20TH FLOOR
PITTSBURGH, PA. 15222

David P. Kiang 4/29/08
APPROVED DATE

DESIGNED	LMC
DRAWN	JMG
CHECKED	MGF
IN CHARGE	RSP
DATE APRIL 29, 2008	
SCALE 1/8"=1'-0"	

8' 4' 0 8'

PORT AUTHORITY OF ALLEGHENY COUNTY
PITTSBURGH PENNSYLVANIA

NORTH SHORE CONNECTOR
GATEWAY STATION FINISHES
PLATFORM PLAN PARTIAL 5 cut el. +708'-0"

Port Authority
connecting people to life

CONTRACT NO. NSC-010G
DWG. NO. AR106 SHT. 66

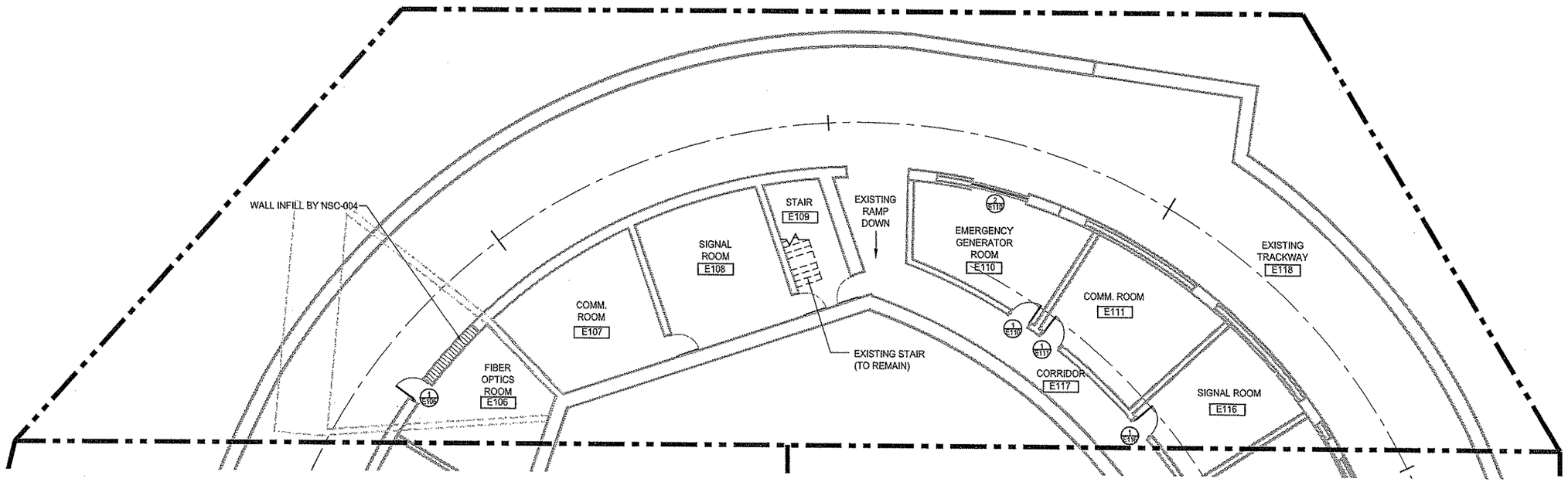

PLATFORM PARTIAL PLAN 1 (AR101)
1/8"=1'-0"

The light / motion Collaborative
EDGE studio and Hoffmann & Associates

EDGE studio
5411 Penn Avenue
Pittsburgh, PA 15206
tel: 412/345.5000
fax: 412/345.5000

Hoffmann & Associates
223 Fourth Avenue
Pittsburgh, PA 15222
tel: 412/471.2473
fax: 412/471.2472

NO.	DATE	DESCRIPTION

REVISIONS

THE PREPARATION OF THIS DRAWING HAS BEEN FINANCED, IN PART, THROUGH A GRANT FROM THE U. S. DEPARTMENT OF TRANSPORTATION, FEDERAL TRANSIT ADMINISTRATION UNDER THE URBAN MASS TRANSPORTATION ACT OF 1964, AS AMENDED.

APPROVAL SIGNATURE 2008

DMJM HARRIS | AECOM
FOUR GATEWAY CENTER
20TH FLOOR
PITTSBURGH, PA. 15222

APPROVED 4/29/08 DATE

DESIGNED	LMC
DRAWN	CFB
CHECKED	MGF
IN CHARGE	RSP
DATE APRIL 29, 2008	
SCALE 1/8"=1'-0"	

8' 4' 0 8'

PORT AUTHORITY OF ALLEGHENY COUNTY
PITTSBURGH PENNSYLVANIA

NORTH SHORE CONNECTOR
GATEWAY STATION FINISHES
PLATFORM PLAN PARTIAL 6 cut el. +708'-0"

Port Authority
connecting people to life

CONTRACT NO.	NSC-010G
DWG. NO. AR107	SHT. 67

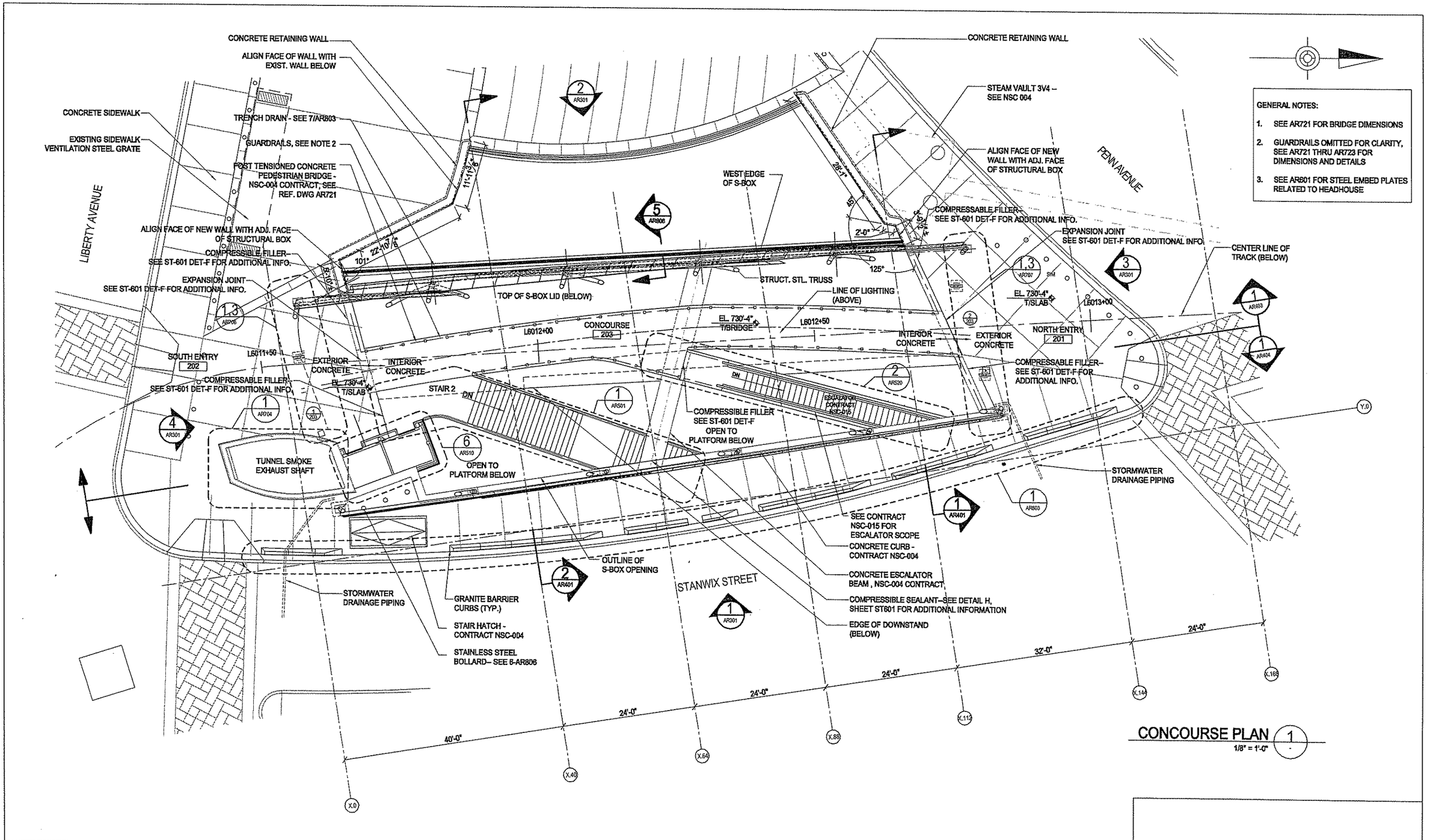

GENERAL NOTES:

1. SEE AR721 FOR BRIDGE DIMENSIONS
2. GUARDRAILS OMITTED FOR CLARITY, SEE AR721 THRU AR723 FOR DIMENSIONS AND DETAILS
3. SEE AR601 FOR STEEL EMBED PLATES RELATED TO HEADHOUSE

CONCOURSE PLAN 1

1/8" = 1'-0"

The light imation Collaborative
EDGE studio and Pfaffmann & Associates

EDGE studio
5411 Penn Avenue
Pittsburgh, PA 15206
tel 412/345 5000
fax 412/345 5006

Pfaffmann & Associates
220 Fourth Avenue
Pittsburgh, PA 15222
tel 412/411 2410
fax 412/411 2472

NO.	DATE	DESCRIPTION

REVISIONS

THE PREPARATION OF THIS DRAWING HAS BEEN FINANCED, IN PART, THROUGH A GRANT FROM THE U. S. DEPARTMENT OF TRANSPORTATION, FEDERAL TRANSIT ADMINISTRATION UNDER THE URBAN MASS TRANSPORTATION ACT OF 1964, AS AMENDED.

APRIL 29, 2008

DMJM HARRIS | AECOM
FOUR GATEWAY CENTER
20TH FLOOR
PITTSBURGH, PA. 15222

APPROVED 4/29/08 DATE

DESIGNED	LMC
DRAWN	JMG
CHECKED	MGF
IN CHARGE	RSP
DATE APRIL 29, 2008	
SCALE 1/8"=1'-0"	

PORT AUTHORITY OF ALLEGHENY COUNTY
PITTSBURGH PENNSYLVANIA

NORTH SHORE CONNECTOR
GATEWAY STATION FINISHES
CONCOURSE PLAN cut el. +734'-0"

Port Authority
connecting people to life

CONTRACT NO. NSC-010G
DWG. NO. AR108 SHT. 68

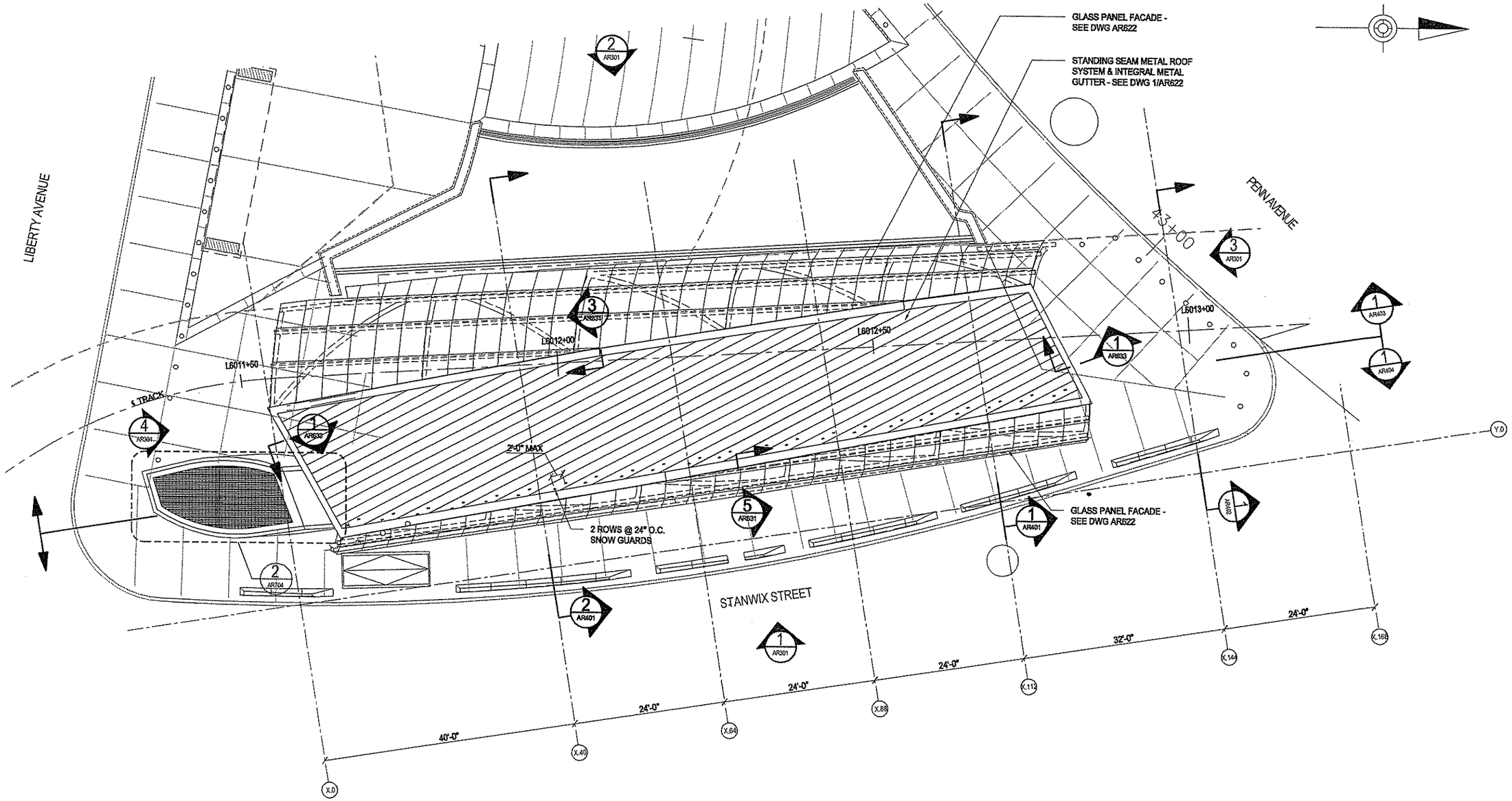

ROOF PLAN 1

1/8"=1'-0"

The light motion Collaborative
EDGE studio and Pfeifmann & Associates

EDGE studio
3411 Penn Avenue
Pittsburgh, PA 15206
tel. 412.345.5005
fax. 412.345.5006

Pfeifmann & Associates
223 Fourth Avenue
Pittsburgh, PA 15222
tel. 412.471.2470
fax. 412.471.2492

NO.	DATE	DESCRIPTION

REVISIONS

THE PREPARATION OF THIS DRAWING HAS BEEN FINANCED, IN PART, THROUGH A GRANT FROM THE U. S. DEPARTMENT OF TRANSPORTATION, FEDERAL TRANSIT ADMINISTRATION UNDER THE URBAN MASS TRANSPORTATION ACT OF 1964, AS AMENDED.

APRIL 29, 2008

DMJM HARRIS | AECOM
FOUR GATEWAY CENTER
20TH FLOOR
PITTSBURGH, PA. 15222

APPROVED 4/29/08 DATE

DESIGNED	LMC
DRAWN	JMG
CHECKED	MGF
IN CHARGE	RSP
DATE APRIL 29, 2008	
SCALE 1/8"=1'-0"	

3' 4' 0 8'

PORT AUTHORITY OF ALLEGHENY COUNTY
PITTSBURGH PENNSYLVANIA

NORTH SHORE CONNECTOR
GATEWAY STATION FINISHES
ROOF PLAN

Port Authority
connecting people to life

CONTRACT NO. NSC-010G
DWG. NO. AR109 SHT. 69

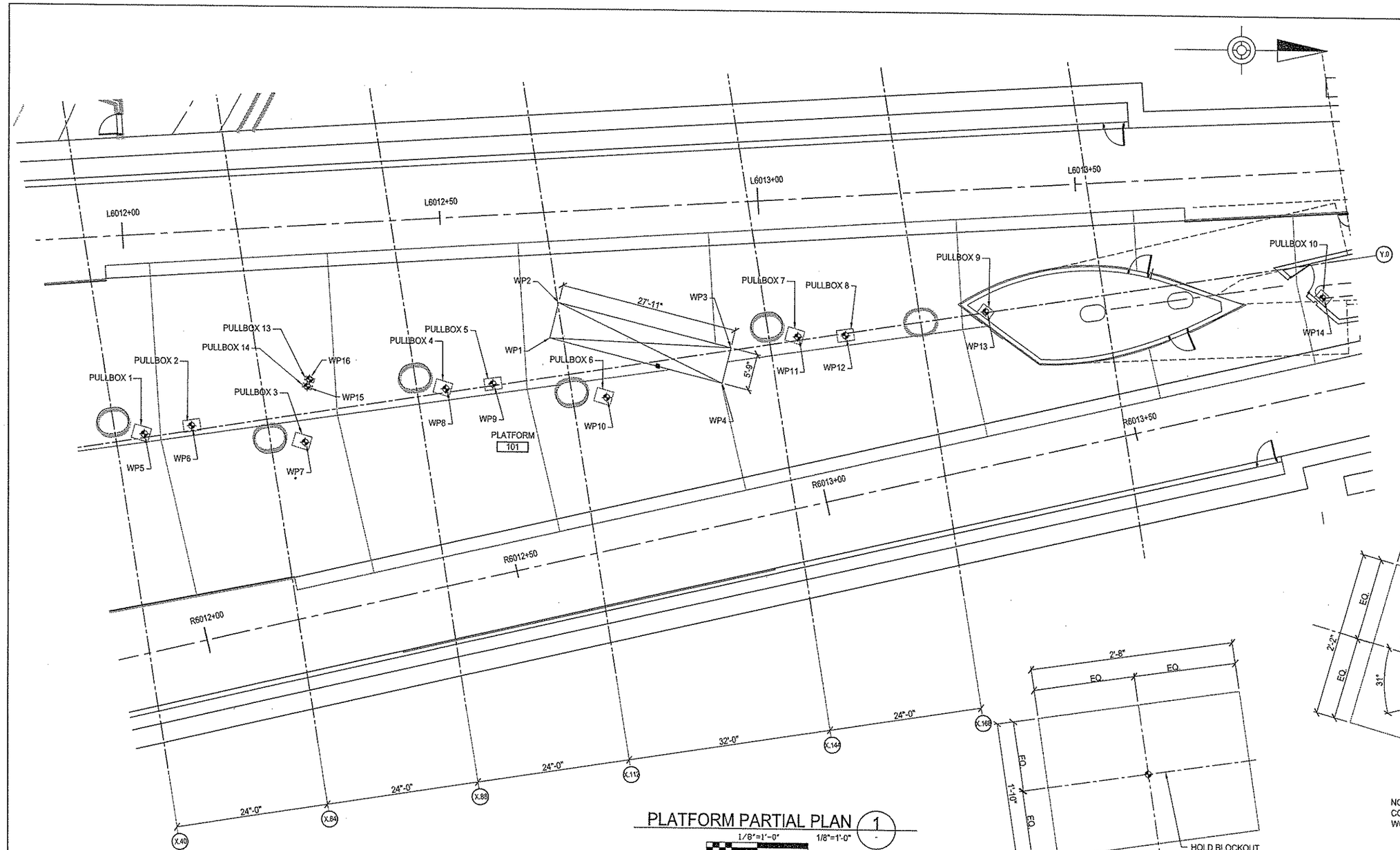

PLATFORM PARTIAL PLAN (1)

1/8"=1'-0" 1/8"=1'-0"

8' 4' 0 8'

CONCRETE BLOCKOUT LOCATION WORKPOINTS NSC-004 CONTRACT			
WORKPOINT	TRACK POINT	OFFSET	
WP1	L6012+66.00	R19'-8 1/2"	NOTE 1
WP2	L6012+67.75	R14'-2 3/4"	NOTE 1
WP3	L6012+94.33	R22'-9 1/4"	NOTE 1
WP4	L6012+92.58	R28'-3"	NOTE 1
WP5	L6012+1.46	R31'-3 5/8"	DETAIL 2
WP6	L6012+8.92	R30'-5"	DETAIL 3
WP7	L6012+26.58	R34'-0 1/8"	DETAIL 2
WP8	L6012+49.25	R26'-9 3/4"	DETAIL 2
WP9	L6012+56.63	R26'-5 1/2"	DETAIL 3
WP10	L6012+74.37	R29'-6 1/4"	DETAIL 2
WP11	L6013+5.00	R21'-7 1/4"	DETAIL 2
WP12	L6013+12.46	R21'-9 1/2"	DETAIL 3
WP13	L6013+34.72	R19'-3 1/4"	NOTE 2
WP14	L6013+87.89	R19'-9 3/4"	NOTE 2
WP15	L6012+27.45	R25'-3 1/8"	NOTE 3
WP16	L6012+27.90	R24'-2"	NOTE 3

NOTES:

1. ESCALATOR PIT: 5'-9" X 27'-11"
2. CONDUIT PULLBOX BLOCKOUT: 20"X26"X5" DEEP, WORKPOINT TO CENTER OF BLOCKOUT, HOLD BLOCKOUT ORIENTATION FLUSH TO CONCRETE WALL
3. CONDUIT PULLBOX BLOCKOUT: 8"X18"X5" DEEP, WORKPOINT TO CENTER OF BLOCKOUT, BLOCKOUT ORIENTATION TO MATCH STAIRCASE EMBED PLATES, SEE AR110 - NOTE 2

REFERENCE ONLY

REFER TO CONTRACT NSC-004, DRAWING TN592 FOR EMBED PLATE LOCATIONS

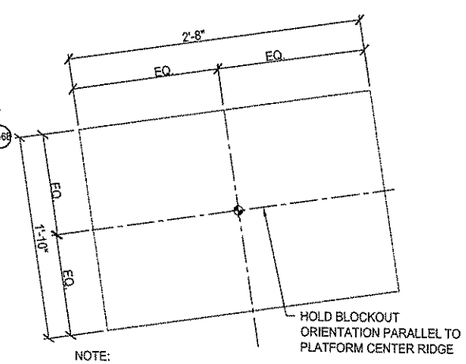

NOTE:
CONDUIT PULLBOX BLOCKOUT: 22"X32"X5" DEEP, PARALLEL TO PLATFORM RIDGE, WORKPOINT TO CENTER OF BLOCKOUT

BLOCKOUT DETAIL (3)

1 1/2"=1'-0" 1 1/2"=1'-0"

6' 3' 0 6'

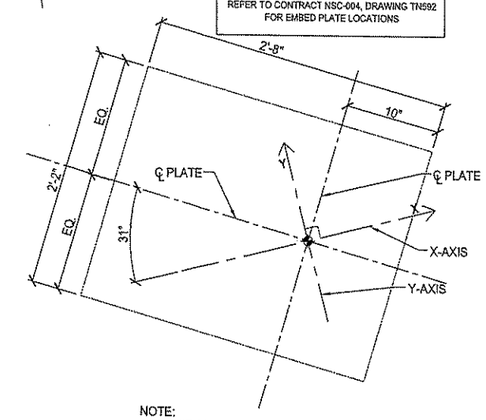

NOTE:
CONDUIT PULLBOX BLOCKOUT: 42"X26"X5" DEEP, WORKPOINT TO CENTER OF BLOCKOUT

BLOCKOUT DETAIL (2)

1 1/2"=1'-0" 1 1/2"=1'-0"

6' 3' 0 6'

The light / motion Collaborative
EDGE studio and Pfafmann & Associates

EDGE studio
5411 Penn Avenue
Pittsburgh, PA 15206
tel: 412.945.5005
fax: 412.945.5006

Pfafmann & Associates
223 Fourth Avenue
Pittsburgh, PA 15222
tel: 412.471.2472
fax: 412.471.2472

NO.	DATE	DESCRIPTION
		DRAWING MODIFIED

REVISIONS

THE PREPARATION OF THIS DRAWING HAS BEEN FINANCED, IN PART, THROUGH A GRANT FROM THE U. S. DEPARTMENT OF TRANSPORTATION, FEDERAL TRANSIT ADMINISTRATION UNDER THE URBAN MASS TRANSPORTATION ACT OF 1964, AS AMENDED.

APRIL 29, 2008

DMJM HARRIS | AECOM
FOUR GATEWAY CENTER
20TH FLOOR
PITTSBURGH, PA. 15222

APPROVED DATE 4/29/08

DESIGNED	LMC
DRAWN	JMG
CHECKED	MGF
IN CHARGE	RSP
DATE APRIL 29, 2008	
SCALE	AS SHOWN

PORT AUTHORITY OF ALLEGHENY COUNTY
PITTSBURGH PENNSYLVANIA

NORTH SHORE CONNECTOR
GATEWAY STATION FINISHES
ELECTRICAL BLOCKOUT LOCATION PLAN PLATFORM LEVEL

Port Authority
connecting people to life

CONTRACT NO. NSC-010G
DWG. NO. AR113 SHT. 73

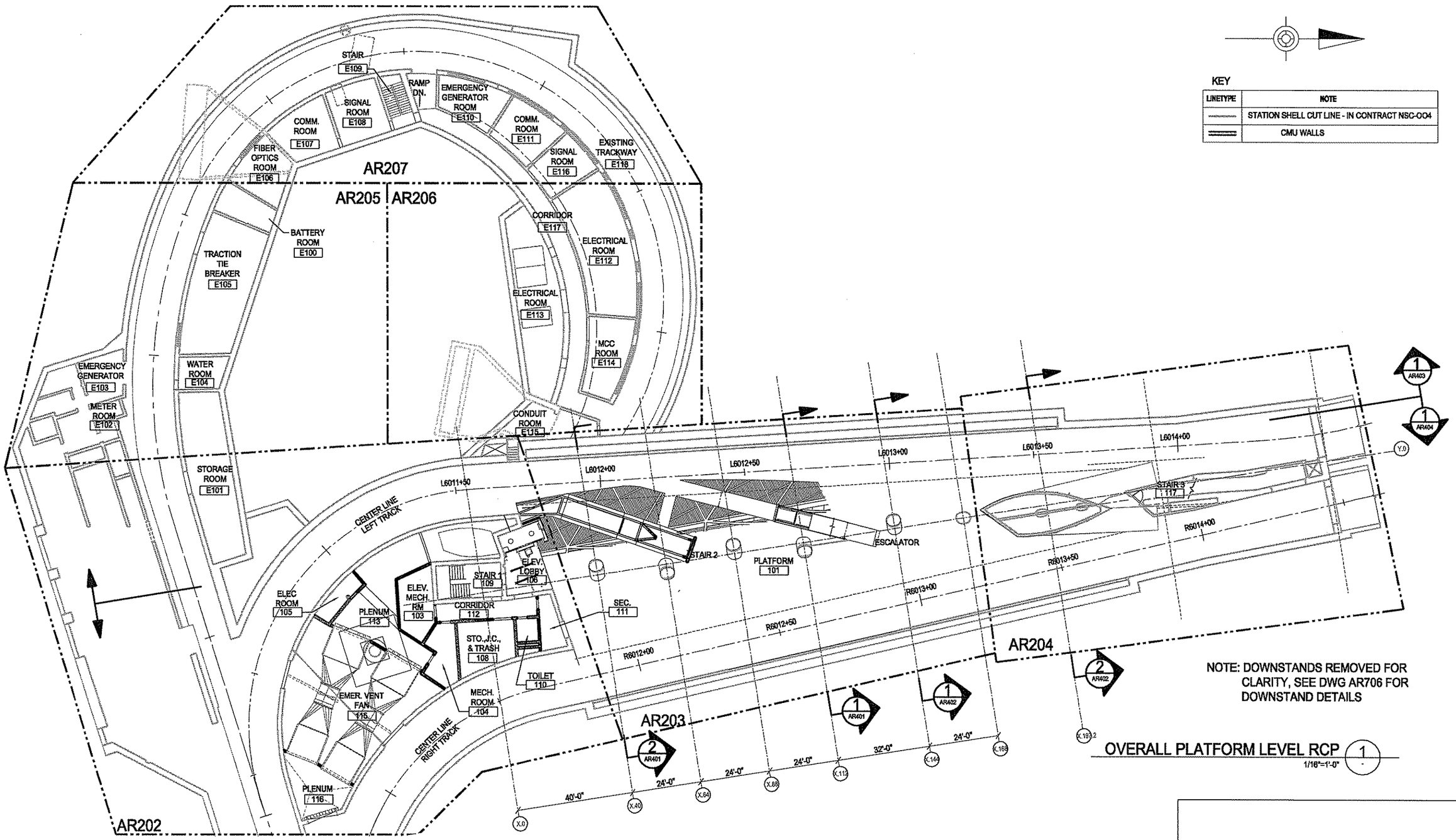

KEY

LINETYPE	NOTE
	STATION SHELL CUT LINE - IN CONTRACT NSC-004
	CMU WALLS

NOTE: DOWNSTANDS REMOVED FOR CLARITY, SEE DWG AR706 FOR DOWNSTAND DETAILS

OVERALL PLATFORM LEVEL RCP (1)

1/16"=1'-0"

The light /motion Collaborative
EDGE studio and Mathmann & Associates

EDGE studio
5411 Penn Avenue
Pittsburgh, PA 15206
tel: 412/345.5000
fax: 412/345.5000

Mathmann & Associates
223 Fourth Avenue
Pittsburgh, Pa 15222
tel: 412/471.2470
fax: 412/471.2472

NO.	DATE	DESCRIPTION

REVISIONS

THE PREPARATION OF THIS DRAWING HAS BEEN FINANCED, IN PART, THROUGH A GRANT FROM THE U. S. DEPARTMENT OF TRANSPORTATION, FEDERAL TRANSIT ADMINISTRATION UNDER THE URBAN MASS TRANSPORTATION ACT OF 1964, AS AMENDED.

PRINTED 4/29/08

DMJM HARRIS | AECOM
FOUR GATEWAY CENTER
20TH FLOOR
PITTSBURGH, PA. 15222

APPROVED — DATE 4/29/08

DESIGNED	LMC
DRAWN	CFB
CHECKED	MGF
IN CHARGE	RSP
DATE	APRIL 29, 2008
SCALE	1/16"=1'-0"

16' 8' 0 16'

PORT AUTHORITY OF ALLEGHENY COUNTY
PITTSBURGH PENNSYLVANIA

NORTH SHORE CONNECTOR
GATEWAY STATION FINISHES
OVERALL PLATFORM & EXISTING LOOP PLAN RCP cut el. +708'-0"

Port Authority
connecting people to life

CONTRACT NO. NSC-010G
DWG. NO. AR201 SHT. 76

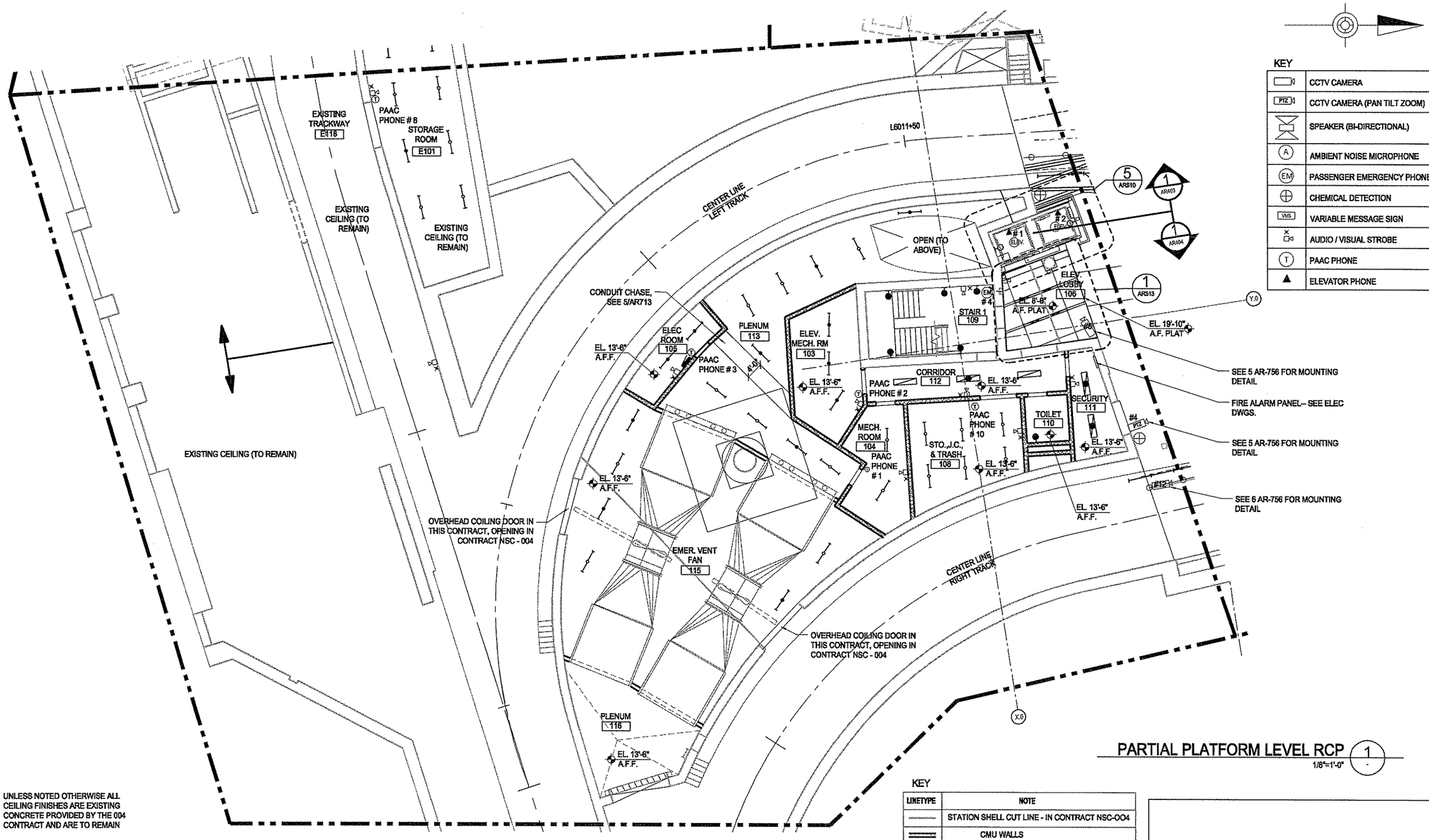

PARTIAL PLATFORM LEVEL RCP 1

1/8"=1'-0"

UNLESS NOTED OTHERWISE ALL CEILING FINISHES ARE EXISTING CONCRETE PROVIDED BY THE 004 CONTRACT AND ARE TO REMAIN

KEY

LINETYPE	NOTE
	STATION SHELL CUT LINE - IN CONTRACT NSC-004
	CMU WALLS

The light / motion Collaborative
EDGE studio and Pfaffmann & Associates

EDGE studio
5411 Penn Avenue
Pittsburgh, PA 15206
tel: 412945.5005
fax: 412945.5006

Pfaffmann & Associates
223 Fourth Avenue
Pittsburgh, PA 15222
tel: 412471.2470
fax: 412471.2472

NO.	DATE	DESCRIPTION

REVISIONS

THE PREPARATION OF THIS DRAWING HAS BEEN FINANCED, IN PART, THROUGH A GRANT FROM THE U. S. DEPARTMENT OF TRANSPORTATION, FEDERAL TRANSIT ADMINISTRATION UNDER THE URBAN MASS TRANSPORTATION ACT OF 1964, AS AMENDED.

PA REGISTERED ARCHITECT

PA REGISTERED PROFESSIONAL ENGINEER

DMJM HARRIS | AECOM
FOUR GATEWAY CENTER
20TH FLOOR
PITTSBURGH, PA. 15222

APPROVED — DATE 4/29/08

DESIGNED	LMC
DRAWN	CFB
CHECKED	MGF
IN CHARGE	RSP
DATE APRIL 29, 2008	
SCALE 1/8"=1'-0"	

3' 4' 0 8'

PORT AUTHORITY OF ALLEGHENY COUNTY
PITTSBURGH PENNSYLVANIA

NORTH SHORE CONNECTOR
GATEWAY STATION FINISHES
PLATFORM RCP PARTIAL 1 cut el. +708'-0"

Port Authority
connecting people to life

CONTRACT NO. NSC-010G
DWG. NO. AR202 SHT. 77

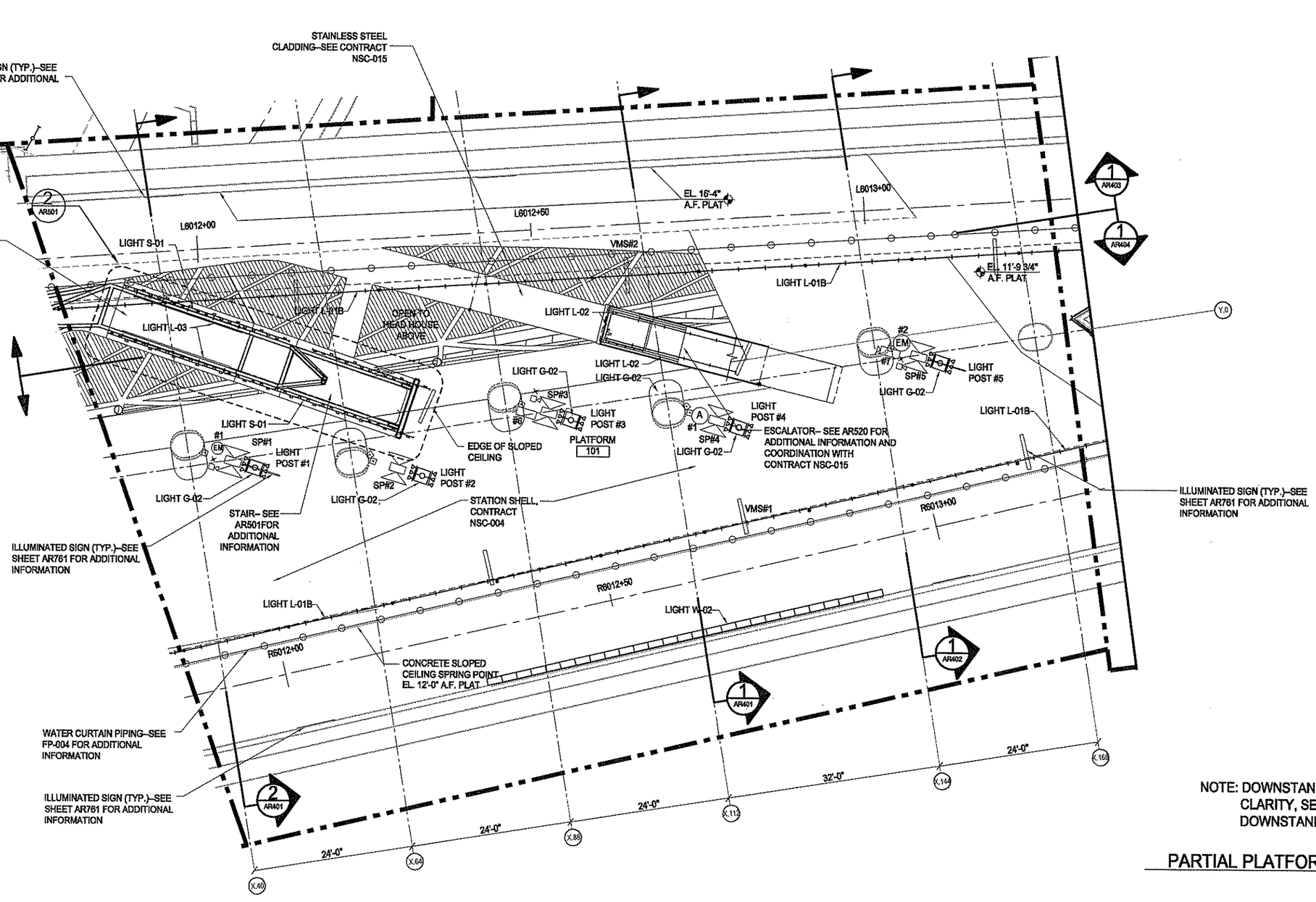

KEY

	CCTV CAMERA
PTZ	CCTV CAMERA (PAN TILT ZOOM)
	SPEAKER (BI-DIRECTIONAL)
A	AMBIENT NOISE MICROPHONE
EM	PASSENGER EMERGENCY PHONE
	CHEMICAL DETECTION
VMS	VARIABLE MESSAGE SIGN
	AUDIO / VISUAL STROBE
T	PAAC PHONE
▲	ELEVATOR PHONE

NOTE: DOWNSTANDS REMOVED FOR CLARITY, SEE DWG AR730 FOR DOWNSTAND DETAILS

PARTIAL PLATFORM LEVEL RCP (1)

1/8"=1'-0"

UNLESS NOTED OTHERWISE ALL CEILING FINISHES ARE EXISTING CONCRETE PROVIDED BY THE 004 CONTRACT AND ARE TO REMAIN

KEY

LINETYPE	NOTE
	STATION SHELL CUT LINE - IN CONTRACT NSC-004
	CMU WALLS

The light /motion Collaborative
EDGE studio and Pfeifmann & Associates

EDGE studio
5414 Penn Avenue
Pittsburgh, PA 15206
tel 412.243.5000
fax 412.243.5006

Pfeifmann & Associates
323 Fourth Avenue
Pittsburgh, PA 15222
tel 412.471.2470
fax 412.471.2472

NO.	DATE	DESCRIPTION

REVISIONS

THE PREPARATION OF THIS DRAWING HAS BEEN FINANCED, IN PART, THROUGH A GRANT FROM THE U. S. DEPARTMENT OF TRANSPORTATION, FEDERAL TRANSIT ADMINISTRATION UNDER THE URBAN MASS TRANSPORTATION ACT OF 1964, AS AMENDED.

PRELIMINARY 2008

DMJM HARRIS | AECOM
FOUR GATEWAY CENTER
20TH FLOOR
PITTSBURGH, PA. 15222

APPROVED — DATE 4/29/08

DESIGNED	LMC
DRAWN	CFB
CHECKED	MGF
IN CHARGE	RSP
DATE APRIL 29, 2008	
SCALE 1/8"=1'-0"	

PORT AUTHORITY OF ALLEGHENY COUNTY
PITTSBURGH PENNSYLVANIA

NORTH SHORE CONNECTOR
GATEWAY STATION FINISHES
PLATFORM RCP PARTIAL 2 cut el. +708'-0"

Port Authority
connecting people to life

CONTRACT NO. NSC-010G
DWG. NO. AR203 SHT. 78

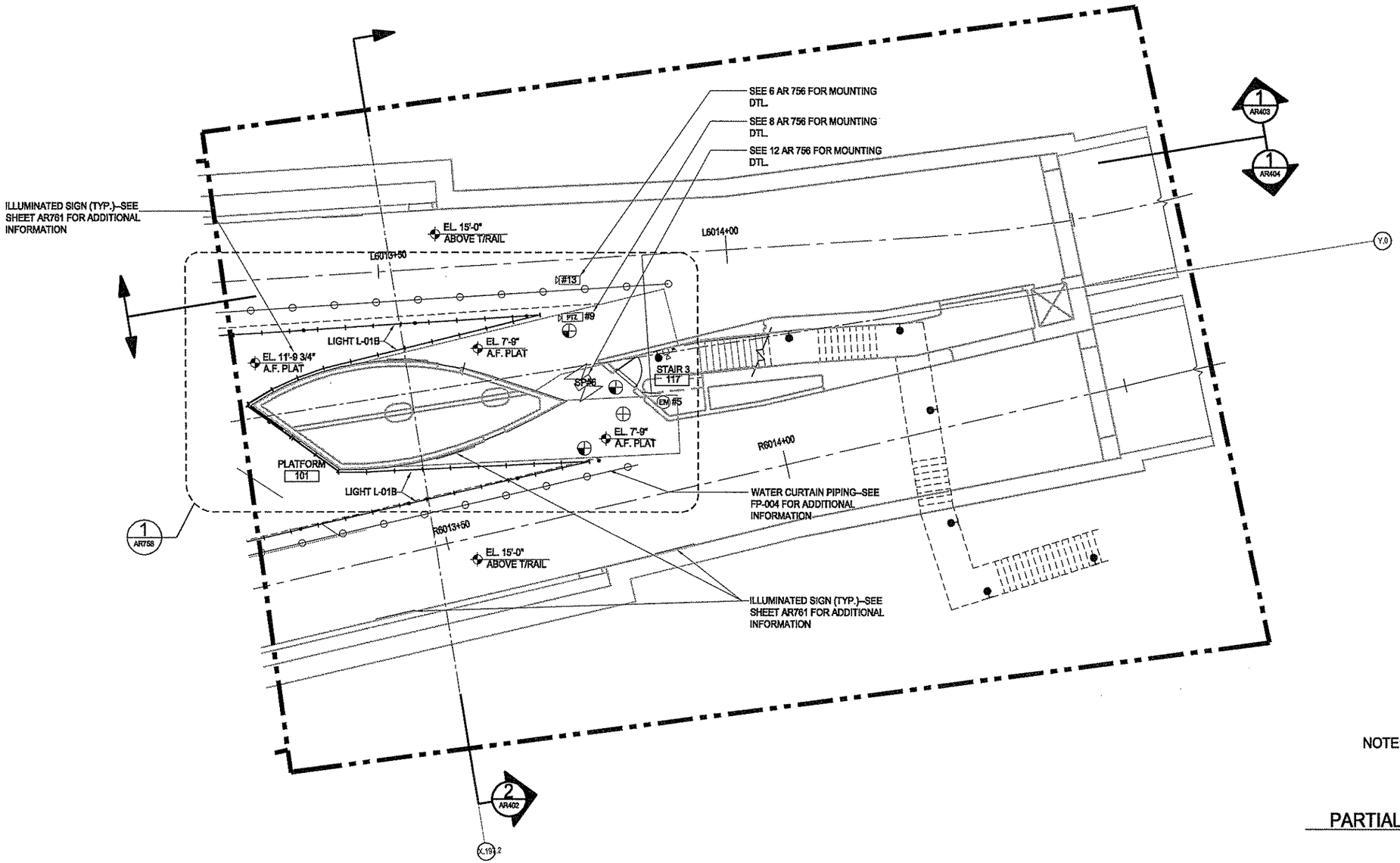

KEY

	CCTV CAMERA
PTZ	CCTV CAMERA (PAN TILT ZOOM)
	SPEAKER (BI-DIRECTIONAL)
A	AMBIENT NOISE MICROPHONE
EM	PASSENGER EMERGENCY PHONE
	CHEMICAL DETECTION
VMS	VARIABLE MESSAGE SIGN
	AUDIO / VISUAL STROBE
T	PAAC PHONE
▲	ELEVATOR PHONE

NOTE: DOWNSTANDS REMOVED FOR CLARITY, SEE DWG AR706 FOR DOWNSTAND DETAILS

PARTIAL PLATFORM LEVEL RCP (1)

1/8"=1'-0"

UNLESS NOTED OTHERWISE ALL CEILING FINISHES ARE EXISTING CONCRETE PROVIDED BY THE 004 CONTRACT AND ARE TO REMAIN

KEY

LINETYPE	NOTE
	STATION SHELL CUT LINE - IN CONTRACT NSC-004
	CMU WALLS

The light /motion Collaborative
EDGE studio and Hoffmann & Associates

EDGE studio
5411 Penn Avenue
Pittsburgh, PA 15206
tel 412/945-5005
fax 412/945-5006

Hoffmann & Associates
223 Fourth Avenue
Pittsburgh, PA 15222
tel 412/471.2470
fax 412/471.2472

NO.	DATE	DESCRIPTION

REVISIONS

THE PREPARATION OF THIS DRAWING HAS BEEN FINANCED, IN PART, THROUGH A GRANT FROM THE U. S. DEPARTMENT OF TRANSPORTATION, FEDERAL TRANSIT ADMINISTRATION UNDER THE URBAN MASS TRANSPORTATION ACT OF 1964, AS AMENDED.

PROFESSIONAL ENGINEER COMMONWEALTH OF PENNSYLVANIA

PENNSYLVANIA 2008

DMJM HARRIS | AECOM
FOUR GATEWAY CENTER
20TH FLOOR
PITTSBURGH, PA. 15222

APPROVED 4/29/08 DATE

DESIGNED	LMC
DRAWN	CFB
CHECKED	MGF
IN CHARGE	RSP
DATE APRIL 29, 2008	
SCALE 1/8"=1'-0"	

8' 4' 0 8'

PORT AUTHORITY OF ALLEGHENY COUNTY
PITTSBURGH PENNSYLVANIA

NORTH SHORE CONNECTOR
GATEWAY STATION FINISHES
PLATFORM RCP PARTIAL 3 cut el. +708'-0"

Port Authority
connect to life

CONTRACT NO. NSC-010G
DWG. NO. AR204 SHT. 79

KEY

	CCTV CAMERA
PTZ	CCTV CAMERA (PAN TILT ZOOM)
	SPEAKER (BI-DIRECTIONAL)
A	AMBIENT NOISE MICROPHONE
EM	PASSENGER EMERGENCY PHONE
	CHEMICAL DETECTION
VMS	VARIABLE MESSAGE SIGN
	AUDIO / VISUAL STROBE
T	PAAC PHONE
▲	ELEVATOR PHONE

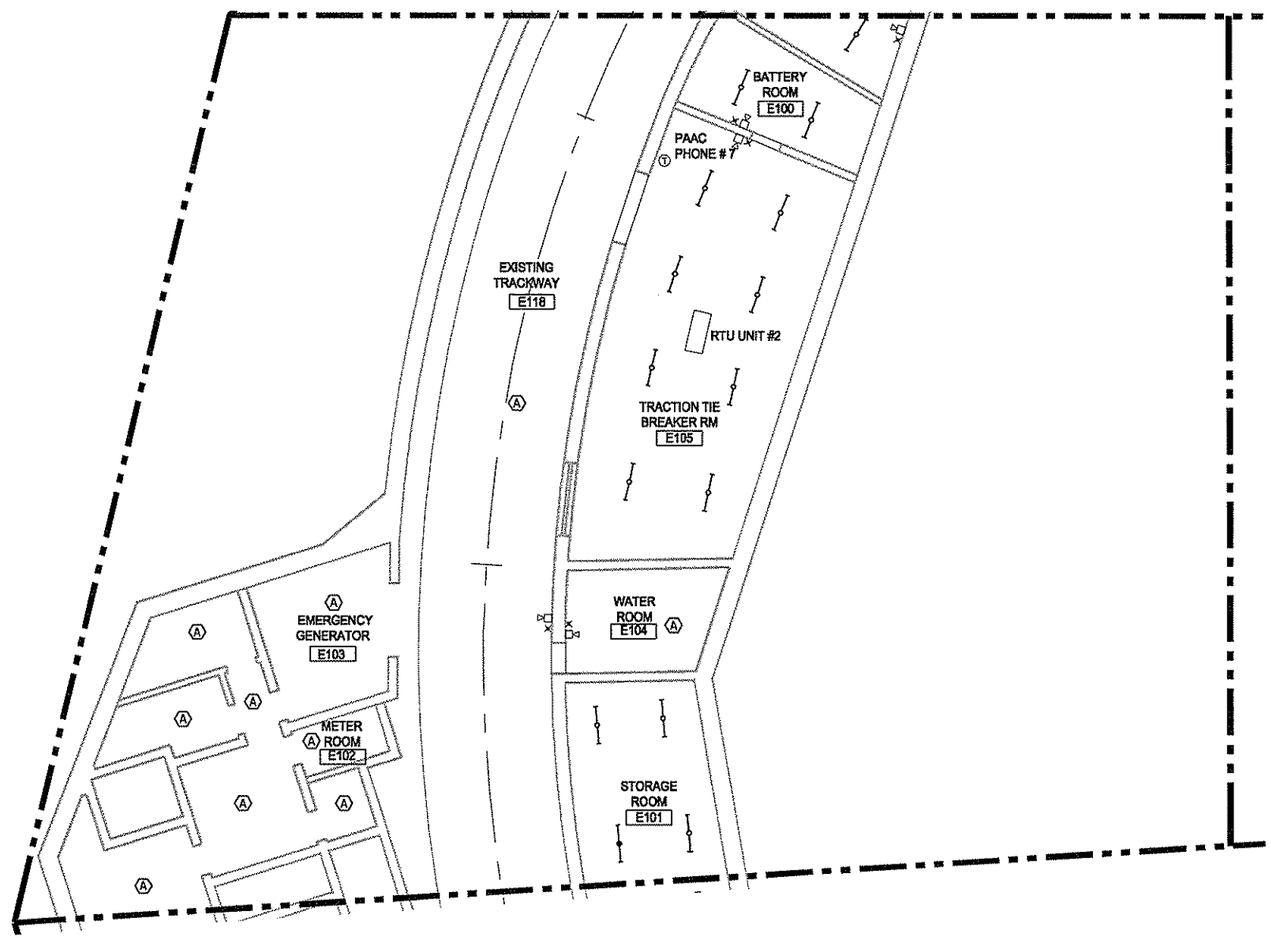

PARTIAL PLATFORM LEVEL RCP (1)

1/8"=1'-0"

KEY

(A) EXISTING LIGHTING (TO REMAIN)	UNLESS NOTED OTHERWISE ALL CEILING FINISHES ARE EXISTING AND ARE TO REMAIN

LINETYPE	NOTE
	STATION SHELL CUT LINE - IN CONTRACT NSC-004
	CMU WALLS

The light /motion Collaborative
EDGE studio and Pfaffmann & Associates

EDGE studio
5411 Penn Avenue
Pittsburgh, PA 15206
tel. 412/345-5005
fax 412/345-5005

Pfaffmann & Associates
223 Fourth Avenue
Pittsburgh, PA 15222
tel. 412/471-2470
fax 412/471-2472

NO.	DATE	DESCRIPTION

REVISIONS

THE PREPARATION OF THIS DRAWING HAS BEEN FINANCED, IN PART, THROUGH A GRANT FROM THE U. S. DEPARTMENT OF TRANSPORTATION, FEDERAL TRANSIT ADMINISTRATION UNDER THE URBAN MASS TRANSPORTATION ACT OF 1964, AS AMENDED.

PROFESSIONAL ENGINEER COMMONWEALTH OF PENNSYLVANIA
APPROVED DATE

DMJM HARRIS | AECOM
FOUR GATEWAY CENTER
20TH FLOOR
PITTSBURGH, PA. 15222

4/29/08
APPROVED DATE

DESIGNED	LMC
DRAWN	CFB
CHECKED	MGF
IN CHARGE	RSP
DATE APRIL 29, 2008	
SCALE 1/8"=1'-0"	

8' 4' 0 8'

PORT AUTHORITY OF ALLEGHENY COUNTY
PITTSBURGH PENNSYLVANIA

NORTH SHORE CONNECTOR
GATEWAY STATION FINISHES
PLATFORM RCP PARTIAL 4 cut el. +708'-0"

Port Authority
connecting people to life

CONTRACT NO.	NSC-010G		
DWG. NO.	AR205	SHT.	80

KEY

	CCTV CAMERA
PTZ	CCTV CAMERA (PAN TILT ZOOM)
	SPEAKER (BI-DIRECTIONAL)
A	AMBIENT NOISE MICROPHONE
EM	PASSENGER EMERGENCY PHONE
	CHEMICAL DETECTION
VMS	VARIABLE MESSAGE SIGN
	AUDIO / VISUAL STROBE
T	PAAC PHONE
▲	ELEVATOR PHONE

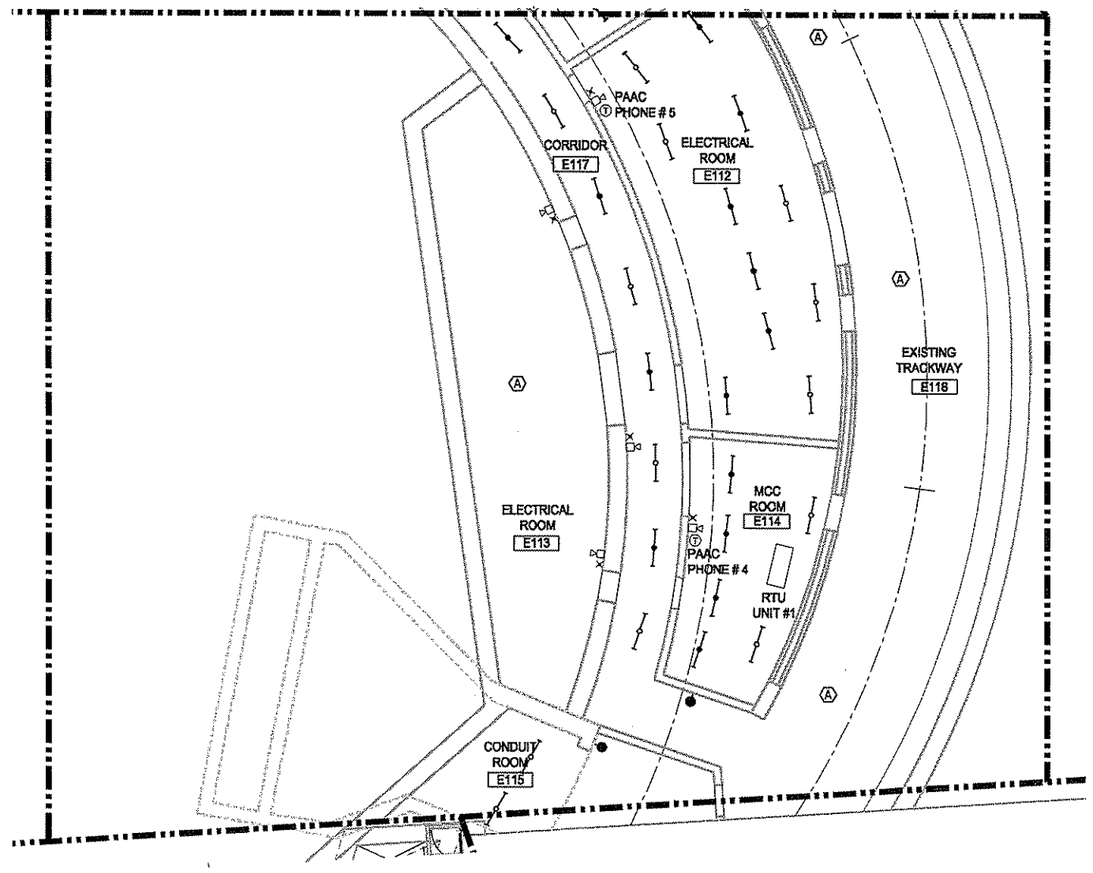

PARTIAL PLATFORM LEVEL RCP (1)

1/8"=1'-0"

KEY

(A) EXISTING LIGHTING (TO REMAIN)	UNLESS NOTED OTHERWISE ALL CEILING FINISHES ARE EXISTING AND ARE TO REMAIN

LINETYPE	NOTE
	STATION SHELL CUT LINE - IN CONTRACT NSC-004
	CMU WALLS

The light /motion Collaborative
EDGE studio and Pfaffmann & Associates

EDGE studio
5411 Penn Avenue
Pittsburgh, PA. 15206
tel. 412.345.5005
fax. 412.345.5006

Pfaffmann & Associates
323 Fourth Avenue
Pittsburgh, PA. 15222
tel. 412.471.2470
fax. 412.471.2472

NO.	DATE	DESCRIPTION

REVISIONS

THE PREPARATION OF THIS DRAWING HAS BEEN FINANCED, IN PART, THROUGH A GRANT FROM THE U. S. DEPARTMENT OF TRANSPORTATION, FEDERAL TRANSIT ADMINISTRATION UNDER THE URBAN MASS TRANSPORTATION ACT OF 1964, AS AMENDED.

REGISTERED PROFESSIONAL ENGINEER
COMMONWEALTH OF PENNSYLVANIA
RICHARD S. PAITMAN
No. 025-E
SIGNATURE

DMJM HARRIS | AECOM
FOUR GATEWAY CENTER
20TH FLOOR
PITTSBURGH, PA. 15222

4/29/08
APPROVED DATE

DESIGNED	LMC
DRAWN	CFB
CHECKED	MGF
IN CHARGE	RSP
DATE APRIL 29, 2008	
SCALE 1/8"=1'-0"	

8' 4' 0 8'

PORT AUTHORITY OF ALLEGHENY COUNTY
PITTSBURGH PENNSYLVANIA

NORTH SHORE CONNECTOR
GATEWAY STATION FINISHES
PLATFORM RCP PARTIAL 5 cut el. +708'-0"

Port Authority
connecting people to life

CONTRACT NO. NSC-010G
DWG. NO. AR206 SHT. 81

KEY

	CCTV CAMERA
PTZ	CCTV CAMERA (PAN TILT ZOOM)
	SPEAKER (BI-DIRECTIONAL)
A	AMBIENT NOISE MICROPHONE
EM	PASSENGER EMERGENCY PHONE
	CHEMICAL DETECTION
VMS	VARIABLE MESSAGE SIGN
	AUDIO / VISUAL STROBE
T	PAAC PHONE
▲	ELEVATOR PHONE

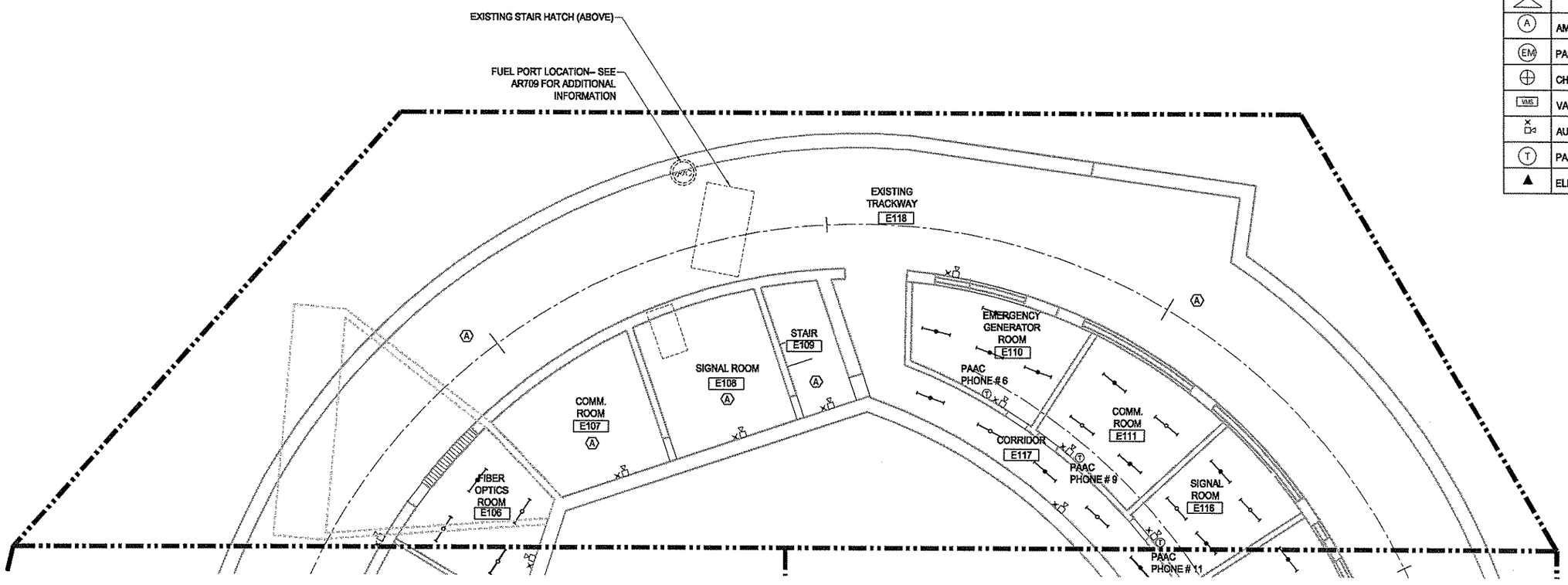

PARTIAL PLATFORM LEVEL RCP (1)

1/8"=1'-0"

KEY

(A) EXISTING LIGHTING (TO REMAIN)	
UNLESS NOTED OTHERWISE ALL CEILING ARE EXISTING (TO REMAIN)	

LINETYPE	NOTE
	STATION SHELL CUT LINE - IN CONTRACT NSC-004
	CMU WALLS

The light /motion Collaborative
EDGE studio and Pfaffmann & Associates

EDGE studio
5411 Penn Avenue
Pittsburgh, PA 15206
tel 412/345 5000
fax 412/345 5005

Pfaffmann & Associates
223 Fourth Avenue
Pittsburgh, PA 15222
tel 412/471-2415
fax 412/471-2472

NO.	DATE	DESCRIPTION

REVISIONS

THE PREPARATION OF THIS DRAWING HAS BEEN FINANCED, IN PART, THROUGH A GRANT FROM THE U. S. DEPARTMENT OF TRANSPORTATION, FEDERAL TRANSIT ADMINISTRATION UNDER THE URBAN MASS TRANSPORTATION ACT OF 1964, AS AMENDED.

PROFESSIONAL REGISTRATION SEAL

SIGNATURE DATE

DMJM HARRIS | AECOM
FOUR GATEWAY CENTER
20TH FLOOR
PITTSBURGH, PA. 15222

APPROVED DATE 4/29/08

DESIGNED	LMC
DRAWN	CFB
CHECKED	MGF
IN CHARGE	RSP
DATE APRIL 29, 2008	
SCALE 1/8"=1'-0"	

8' 4' 0 8'

PORT AUTHORITY OF ALLEGHENY COUNTY
PITTSBURGH PENNSYLVANIA

NORTH SHORE CONNECTOR
GATEWAY STATION FINISHES
PLATFORM RCP PARTIAL 6 cut el. +708'-0"

Port Authority
connecting people to life

CONTRACT NO.	NSC-010G		
DWG. NO.	AR207	SHT.	82

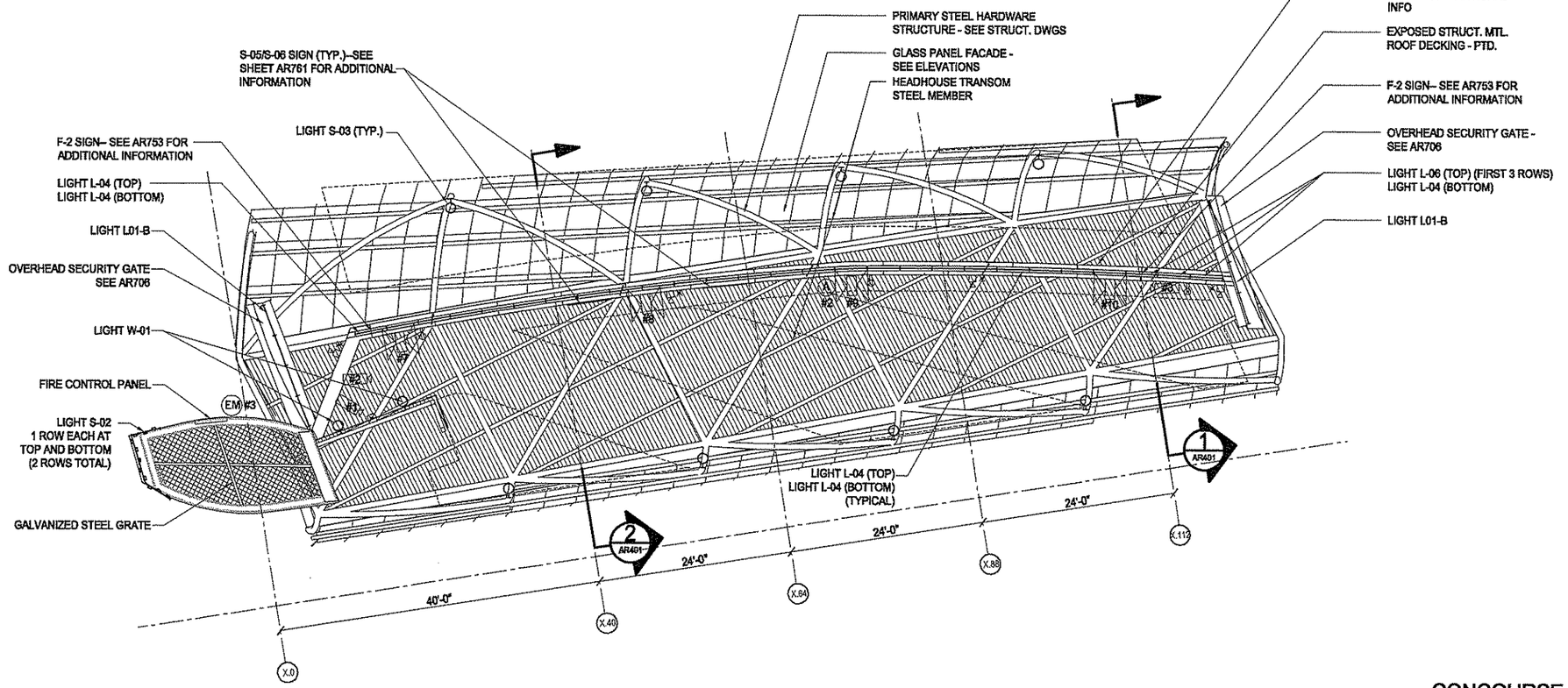

CONCOURSE LEVEL RCP (1)

1/8"=1'-0"

KEY

	CCTV CAMERA
PTZ	CCTV CAMERA (PAN TILT ZOOM)
	SPEAKER (BI-DIRECTIONAL)
A	AMBIENT NOISE MICROPHONE
EM	PASSENGER EMERGENCY PHONE
	CHEMICAL DETECTION
VMS	VARIABLE MESSAGE SIGN
	AUDIO / VISUAL STROBE
T	PAAC PHONE
▲	ELEVATOR PHONE

NOTE: DEVICES SHOWN FOR REFERENCE: REFER TO SHEET AR711 FOR DEVICE LOCATIONS

NOTE: LIGHT L-05 TO BE PROTECTED FROM WATER AT TOP AND SIDES OF FIXTURE

NOTE: PROVIDE WATER STOP BETWEEN L-04 AND L-06 LIGHT FIXTURES

The light /motion Collaborative
EDGE studio and Platmann & Associates

EDGE studio
5411 Penn Avenue
Pittsburgh, PA 15206
tel: 412/345.5005
fax: 412/345.5006

Platmann & Associates
220 Fourth Avenue
Pittsburgh, PA 15222
tel: 412/471.2470
fax: 412/471.2472

NO.	DATE	DESCRIPTION

REVISIONS

THE PREPARATION OF THIS DRAWING HAS BEEN FINANCED, IN PART, THROUGH A GRANT FROM THE U. S. DEPARTMENT OF TRANSPORTATION, FEDERAL TRANSIT ADMINISTRATION UNDER THE URBAN MASS TRANSPORTATION ACT OF 1964, AS AMENDED.

PA REG. 27,925

DMJM HARRIS | AECOM
FOUR GATEWAY CENTER
20TH FLOOR
PITTSBURGH, PA. 15222

APPROVED — DATE 4/29/08

DESIGNED	LMC
DRAWN	CFB
CHECKED	MGF
IN CHARGE	RSP
DATE APRIL 29, 2008	
SCALE 1/8"=1'-0"	

8' 4' 0 8'

PORT AUTHORITY OF ALLEGHENY COUNTY
PITTSBURGH PENNSYLVANIA

NORTH SHORE CONNECTOR
GATEWAY STATION FINISHES
CONCOURSE RCP cut el. +734'-0"

Port Authority
connecting people to life

CONTRACT NO. NSC-010G
DWG. NO. AR208 SHT. 83

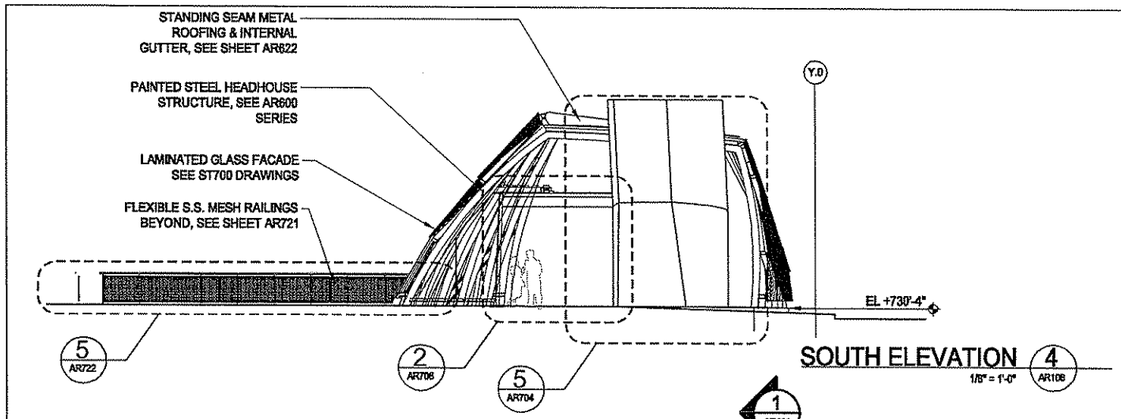

SOUTH ELEVATION 4 AR108
1/8" = 1'-0"

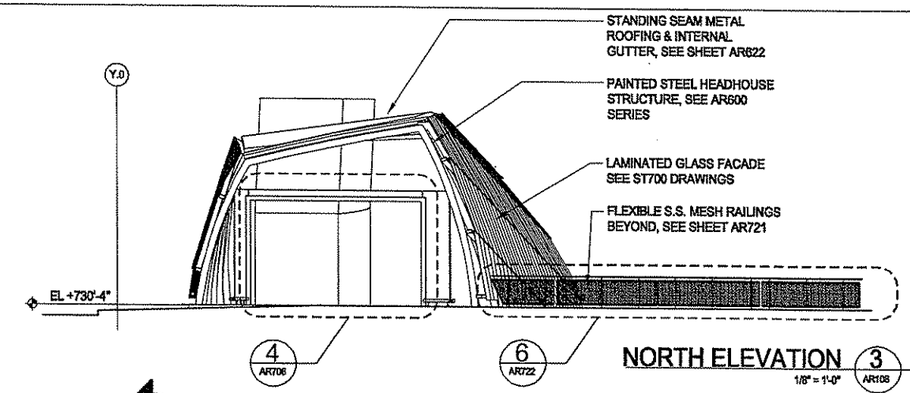

NORTH ELEVATION 3 AR108
1/8" = 1'-0"

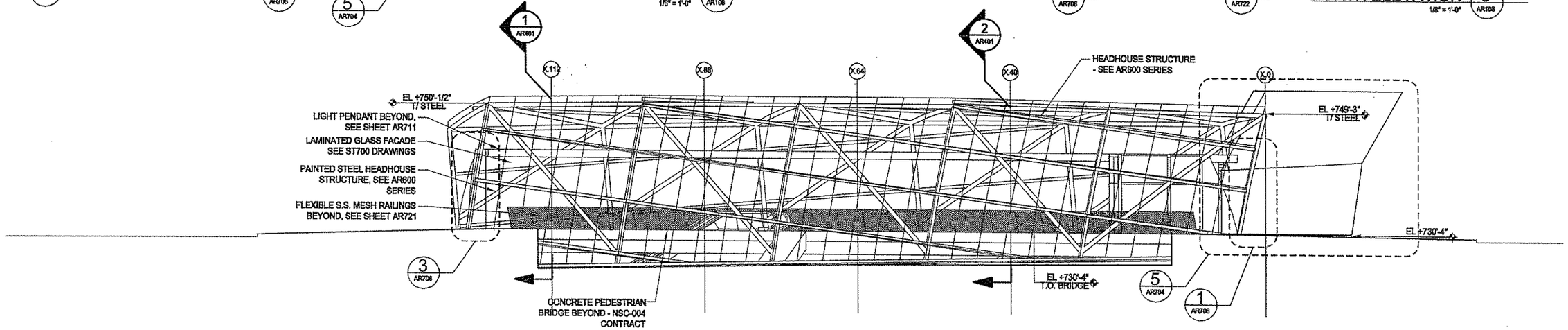

WEST ELEVATION 2 AR108
1/8" = 1'-0"

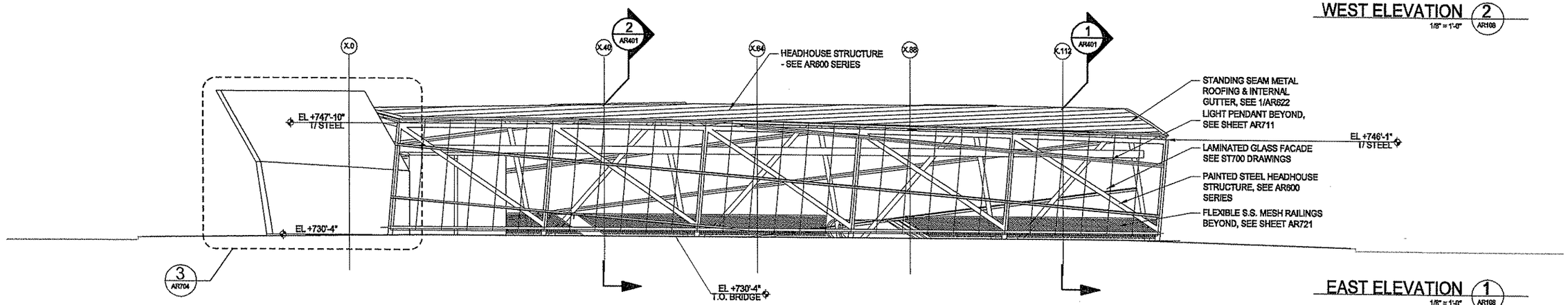

EAST ELEVATION 1 AR108
1/8" = 1'-0"

The light / motion Collaborative
EDGE studio and Pfafmann & Associates

EDGE studio
5411 Penn Avenue
Pittsburgh, PA 15206
tel: 412/363-5005
fax: 412/363-5006

Pfafmann & Associates
223 Fourth Avenue
Pittsburgh, PA 15222
tel: 412/471-2410
fax: 412/471-2412

NO.	DATE	DESCRIPTION

REVISIONS

THE PREPARATION OF THIS DRAWING HAS BEEN FINANCED, IN PART, THROUGH A GRANT FROM THE U. S. DEPARTMENT OF TRANSPORTATION, FEDERAL TRANSIT ADMINISTRATION UNDER THE URBAN MASS TRANSPORTATION ACT OF 1964, AS AMENDED.

PFAFMANN & ASSOCIATES
PITTSBURGH, PA
ARCHITECTURE
ARCHITECTURE 08

DMJM HARRIS | AECOM
FOUR GATEWAY CENTER
20TH FLOOR
PITTSBURGH, PA. 15222
APPROVED
4/29/08
DATE

DESIGNED	LMC
DRAWN	JMG
CHECKED	MGF
IN CHARGE	RSP
DATE APRIL 29, 2008	
SCALE 1/8"=1'-0"	

8' 4' 0 8'

PORT AUTHORITY OF ALLEGHENY COUNTY
PITTSBURGH PENNSYLVANIA

NORTH SHORE CONNECTOR
GATEWAY STATION FINISHES
EXTERIOR ELEVATIONS

Port Authority
connecting people to life

CONTRACT NO. NSC-010G
DWG. NO. AR301
SHT. 84

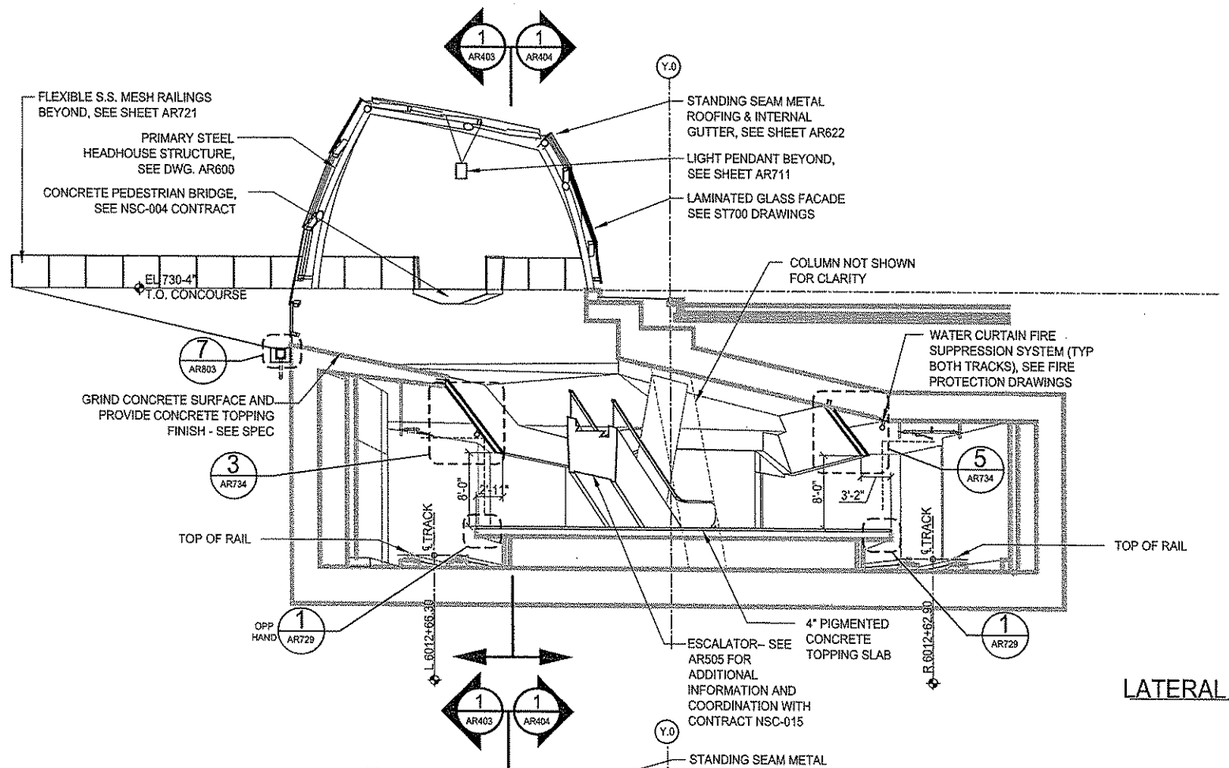

LATERAL SECTION X.112 (1 / AR101)
1/8" = 1'-0"

KEY

LINETYPE	NOTE
	STATION SHELL CUT LINE - IN CONTRACT NSC-004
	STATION SHELL BEYOND - IN CONTRACT NSC-004

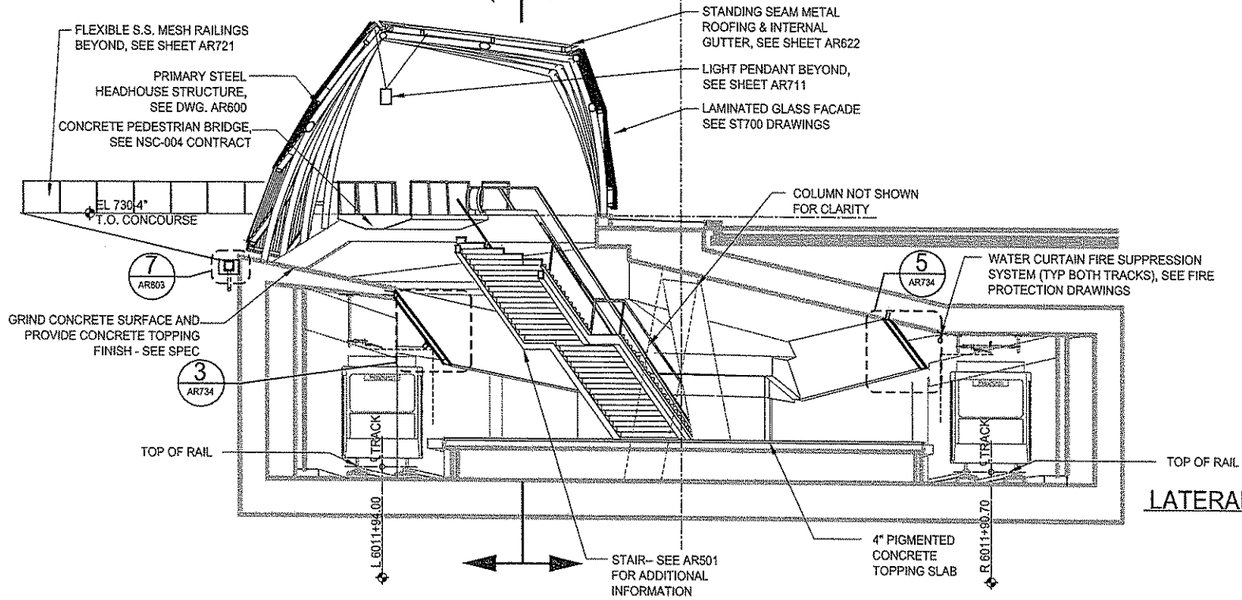

LATERAL SECTION X.40 (2 / AR101)
1/8" = 1'-0"

The light/motion Collaborative
EDGE studio and Pfaffmann & Associates

EDGE studio
5411 Penn Avenue
Pittsburgh, PA 15206
tel: 412/345.5005
fax: 412/345.5006

Pfaffmann & Associates
223 Fourth Avenue
Pittsburgh, PA 15222
tel: 412/471.2470
fax: 412/471.2472

NO.	DATE	DESCRIPTION

REVISIONS

THE PREPARATION OF THIS DRAWING HAS BEEN FINANCED, IN PART, THROUGH A GRANT FROM THE U. S. DEPARTMENT OF TRANSPORTATION, FEDERAL TRANSIT ADMINISTRATION UNDER THE URBAN MASS TRANSPORTATION ACT OF 1964, AS AMENDED.

APPROVED SIGNATURE 2008

DMJM HARRIS | AECOM
FOUR GATEWAY CENTER
20TH FLOOR
PITTSBURGH, PA. 15222

APPROVED — DATE 4/29/08

DESIGNED	LMC
DRAWN	JMG
CHECKED	MGF
IN CHARGE	RSP
DATE APRIL 29, 2008	
SCALE 1/8"=1'-0"	

8' 4' 0 8'

PORT AUTHORITY OF ALLEGHENY COUNTY
PITTSBURGH PENNSYLVANIA

NORTH SHORE CONNECTOR
GATEWAY STATION FINISHES
LATERAL SECTIONS X.40 & X.112

Port Authority
connect people to life

CONTRACT NO. NSC-010G
DWG. NO. AR401 SHT. 85

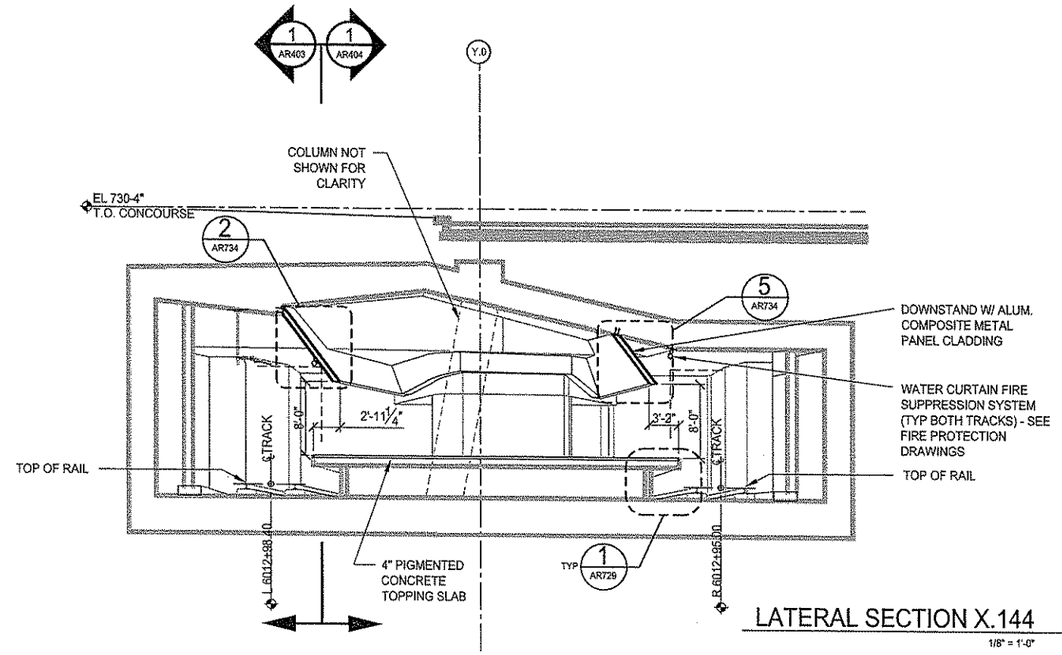

LATERAL SECTION X.144 (1 AR101)
1/8" = 1'-0"

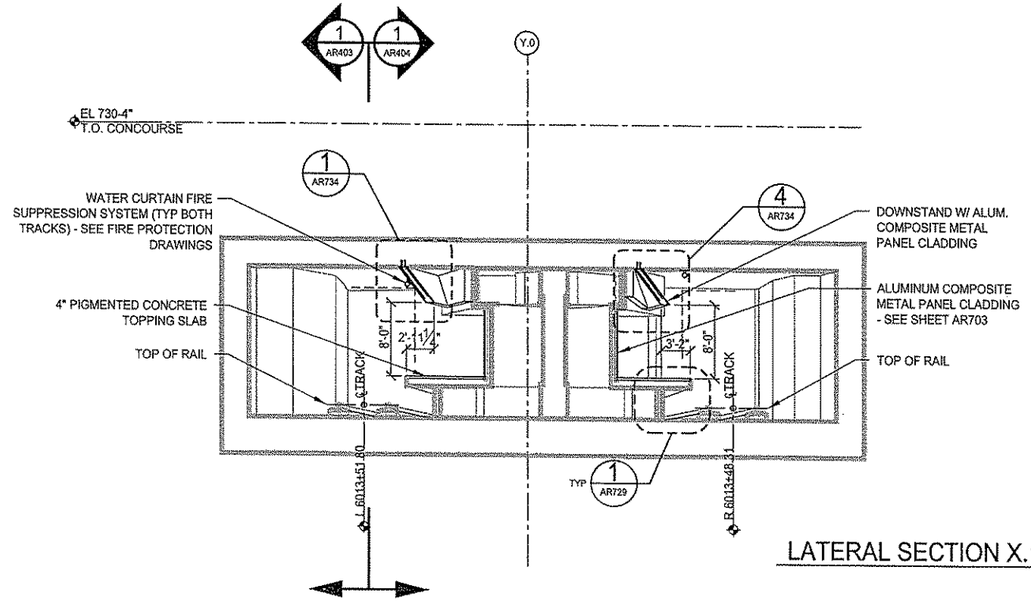

LATERAL SECTION X.197.2 (2 AR101)
1/8" = 1'-0"

KEY

LINETYPE	NOTE
	STATION SHELL CUT LINE - IN CONTRACT NSC-004
	STATION SHELL BEYOND - IN CONTRACT NSC-004

The light/motion Collaborative
EDGE studio and Pfaffmann & Associates

EDGE studio
5411 Penn Avenue
Pittsburgh, PA 15206
tel: 412/345.5005
fax: 412/345.5006

Pfaffmann & Associates
223 Fourth Avenue
Pittsburgh, PA 15222
tel: 412/471.2470
fax: 412/471.2472

NO.	DATE	DESCRIPTION

REVISIONS

THE PREPARATION OF THIS DRAWING HAS BEEN FINANCED, IN PART, THROUGH A GRANT FROM THE U. S. DEPARTMENT OF TRANSPORTATION, FEDERAL TRANSIT ADMINISTRATION UNDER THE URBAN MASS TRANSPORTATION ACT OF 1964, AS AMENDED.

PROFESSIONAL ENGINEER COMMONWEALTH OF PENNSYLVANIA
DATE 4/29/08

DMJM HARRIS | AECOM
FOUR GATEWAY CENTER
20TH FLOOR
PITTSBURGH, PA. 15222

APPROVED 4/29/08 DATE

DESIGNED	LMC
DRAWN	JMG
CHECKED	MGF
IN CHARGE	RSP
DATE APRIL 29, 2008	
SCALE 1/8"=1'-0"	

8' 4' 0 8'

PORT AUTHORITY OF ALLEGHENY COUNTY
PITTSBURGH PENNSYLVANIA

NORTH SHORE CONNECTOR
GATEWAY STATION FINISHES
LATERAL SECTIONS X.144 & X.197.2

Port Authority
constitgrayale to OK

CONTRACT NO. NSC-010G
DWG. NO. AR402 SHT. 86

KEY

LINETYPE	NOTE
	STATION SHELL IN CONTRACT NSC-004

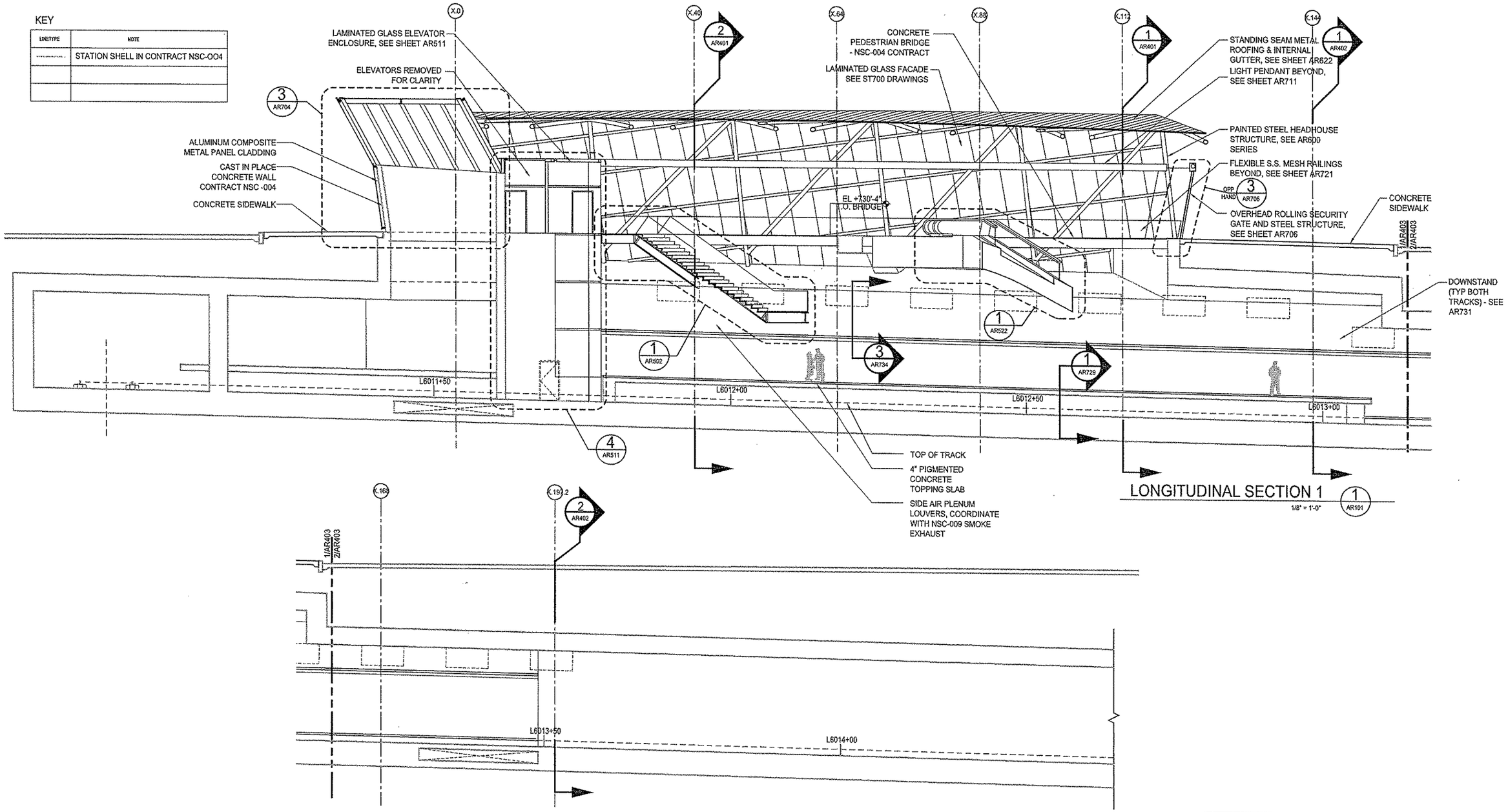

The light/motion Collaborative
EDGE studio and Pfaffmann & Associates

EDGE studio
5411 Penn Avenue
Pittsburgh, PA 15206
tel: 412.345.5005
fax: 412.345.5006

Pfaffmann & Associates
223 Fourth Avenue
Pittsburgh, PA 15222
tel: 412.471.2470
fax: 412.471.2472

NO.	DATE	DESCRIPTION
		REVISIONS

THE PREPARATION OF THIS DRAWING HAS BEEN FINANCED, IN PART, THROUGH A GRANT FROM THE U. S. DEPARTMENT OF TRANSPORTATION, FEDERAL TRANSIT ADMINISTRATION UNDER THE URBAN MASS TRANSPORTATION ACT OF 1964, AS AMENDED.

APRIL 29, 2008

DMJM HARRIS | AECOM
FOUR GATEWAY CENTER
20TH FLOOR
PITTSBURGH, PA. 15222

APPROVED DATE 4/29/08

DESIGNED	LMC
DRAWN	JMG
CHECKED	MGF
IN CHARGE	RSP
DATE APRIL 29, 2008	
SCALE 1/8"=1'-0"	
8' 4' 0 8	

PORT AUTHORITY OF ALLEGHENY COUNTY
PITTSBURGH PENNSYLVANIA

NORTH SHORE CONNECTOR
GATEWAY STATION FINISHES
LONGITUDINAL SECTION 1

Port Authority
connecting people to life

CONTRACT NO. NSC-010G
DWG. NO. AR403 SHT. 87

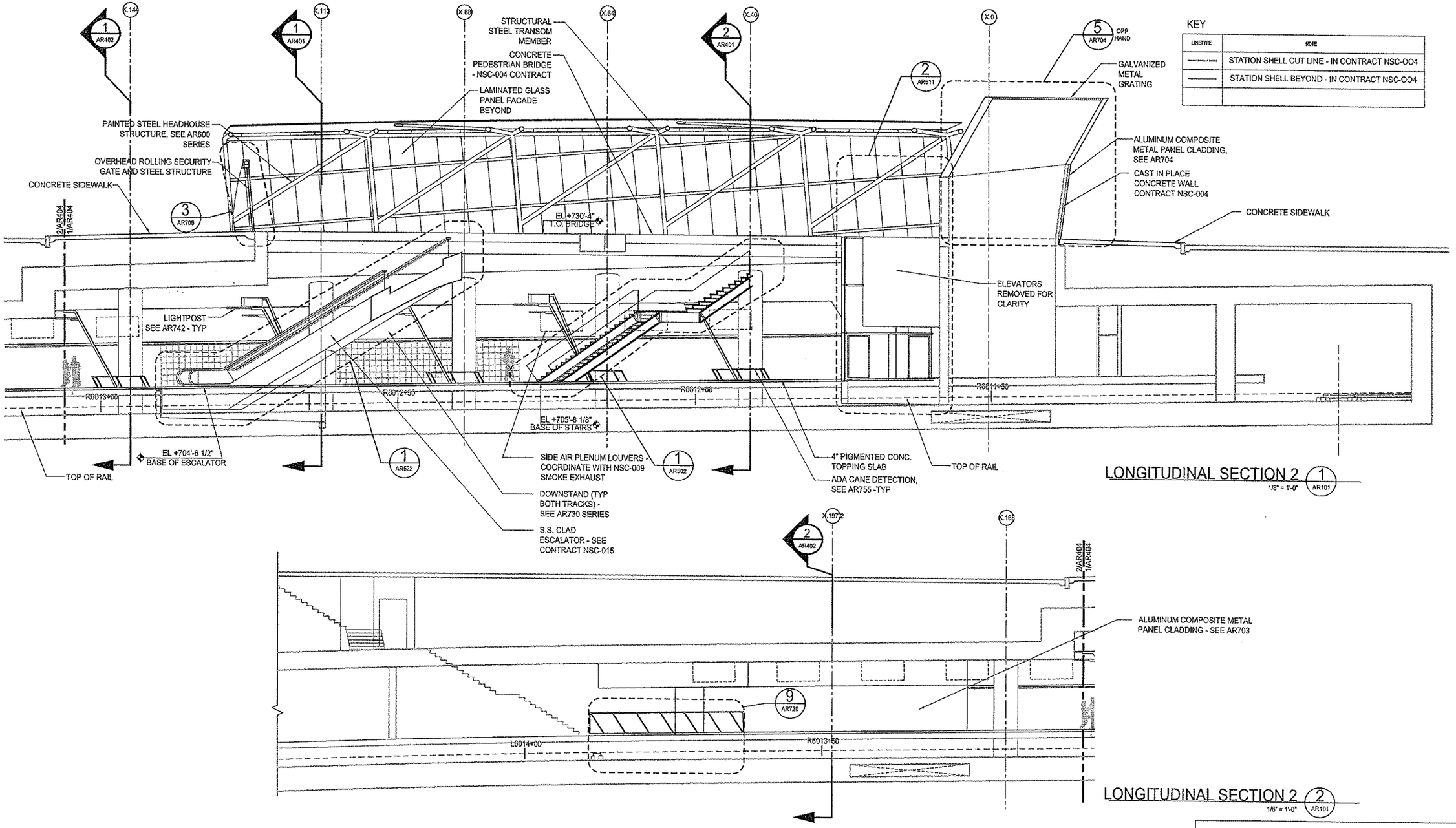

The light / motion Collaborative
EDGE studio and Pfeifmann & Associates

EDGE studio
5415 Penn Avenue
Pittsburgh, PA 15206
tel: 412.345.5005
fax: 412.345.5006

Pfeifmann & Associates
223 Fourth Avenue
Pittsburgh, PA 15222
tel: 412.471.2410
fax: 412.471.2472

NO.	DATE	DESCRIPTION

REVISIONS

THE PREPARATION OF THIS DRAWING HAS BEEN FINANCED, IN PART, THROUGH A GRANT FROM THE U. S. DEPARTMENT OF TRANSPORTATION, FEDERAL TRANSIT ADMINISTRATION UNDER THE URBAN MASS TRANSPORTATION ACT OF 1964, AS AMENDED.

PA REGISTRATION

DMJM HARRIS | AECOM
FOUR GATEWAY CENTER
20TH FLOOR
PITTSBURGH, PA. 15222

4/29/08
APPROVED DATE

DESIGNED	LMC
DRAWN	JMG
CHECKED	MGF
IN CHARGE	RSP
DATE APRIL 29, 2008	
SCALE 1/8"=1'-0"	

8' 4' 0 8

PORT AUTHORITY OF ALLEGHENY COUNTY
PITTSBURGH PENNSYLVANIA

NORTH SHORE CONNECTOR
GATEWAY STATION FINISHES
LONGITUDINAL SECTION 2

Port Authority
connecting people to life

CONTRACT NO. NSC-010G
DWG. NO. AR404 SHT. 88

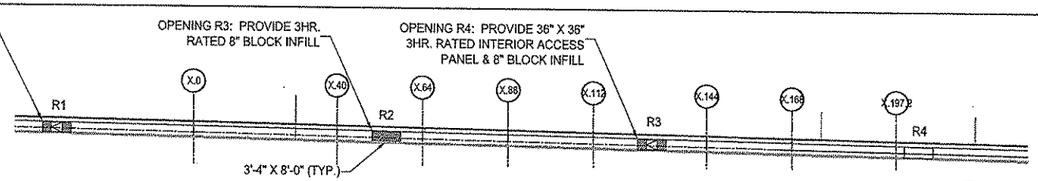

ALL UNDER PLATFORM OPENINGS TO BE PROVIDED AS PART OF CONTRACT NSC-004

RIGHT TRACK UNDERPLATFORM ELEVATION (4 / AR101)

1/8" = 1'-0"

KEY

LINETYPE	NOTE
	STATION SHELL CUT LINE - IN CONTRACT NSC-004
	STATION SHELL BEYOND - IN CONTRACT NSC-004

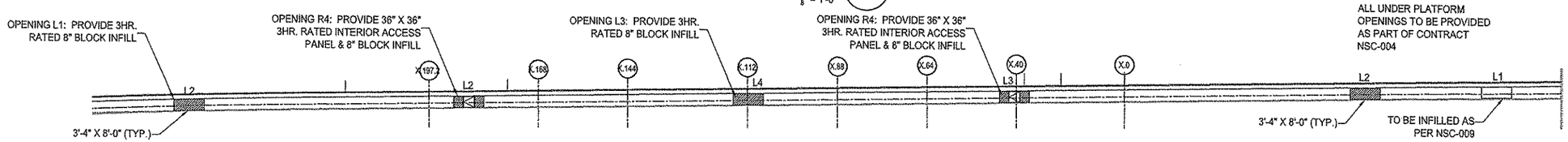

ALL UNDER PLATFORM OPENINGS TO BE PROVIDED AS PART OF CONTRACT NSC-004

LEFT TRACK UNDERPLATFORM ELEVATION (3 / AR101)

1/16" = 1'-0"

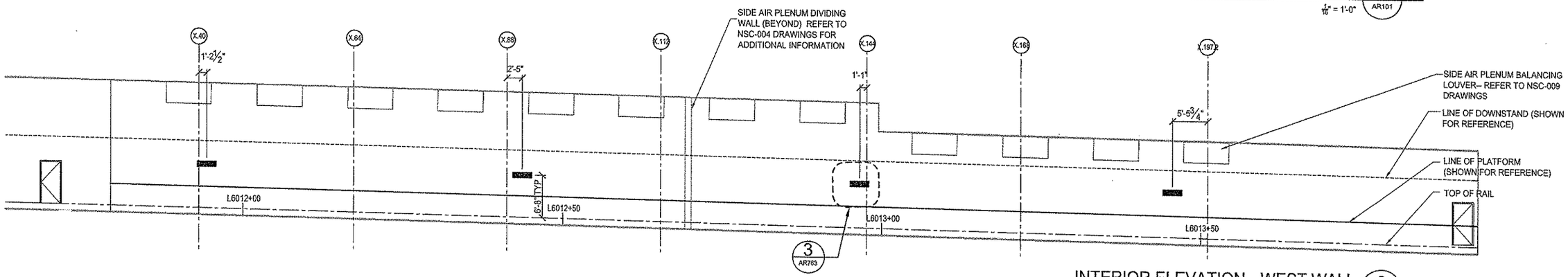

INTERIOR ELEVATION-- WEST WALL (2 / AR101)

1/8" = 1'-0"

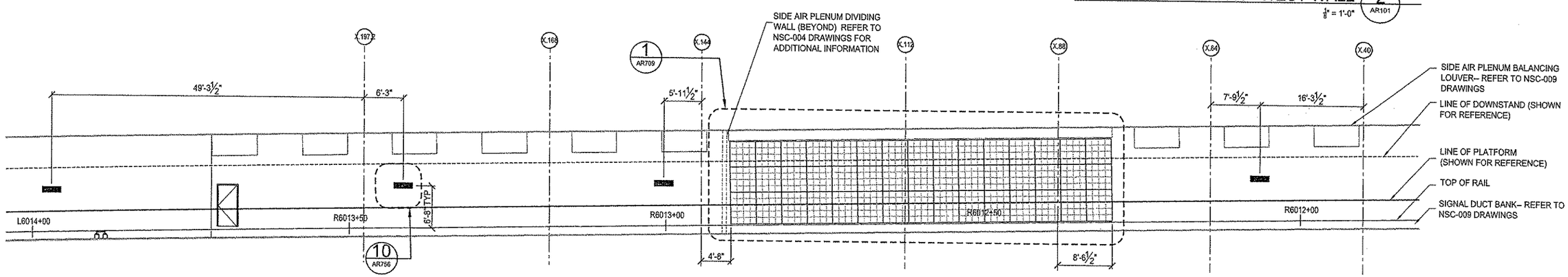

INTERIOR ELEVATION-- EAST WALL (1 / AR101)

1/8" = 1'-0"

The light / motion Collaborative
EDGE studio and Pfaffmann & Associates

EDGE studio
5411 Penn Avenue
Pittsburgh, PA 15206
tel: 412.241.5055
fax: 412.241.5606

Pfaffmann & Associates
223 Fourth Avenue
Pittsburgh, PA 15222
tel: 412.471.2470
fax: 412.471.2472

NO.	DATE	DESCRIPTION

REVISIONS

THE PREPARATION OF THIS DRAWING HAS BEEN FINANCED, IN PART, THROUGH A GRANT FROM THE U. S. DEPARTMENT OF TRANSPORTATION, FEDERAL TRANSIT ADMINISTRATION UNDER THE URBAN MASS TRANSPORTATION ACT OF 1964, AS AMENDED.

APPROVED SIGNATURE

DMJM HARRIS | AECOM
FOUR GATEWAY CENTER
20TH FLOOR
PITTSBURGH, PA. 15222

APPROVED 4/29/08 DATE

DESIGNED	LMC
DRAWN	CFB
CHECKED	MGF
IN CHARGE	RSP
DATE APRIL 29, 2008	
SCALE	
AS SHOWN	

PORT AUTHORITY OF ALLEGHENY COUNTY
PITTSBURGH PENNSYLVANIA

NORTH SHORE CONNECTOR
GATEWAY STATION FINISHES
INTERIOR ELEVATIONS
1 OF 2

Port Authority connecting people to life

CONTRACT NO. NSC-010G
DWG. NO. AR701 SHT. 127

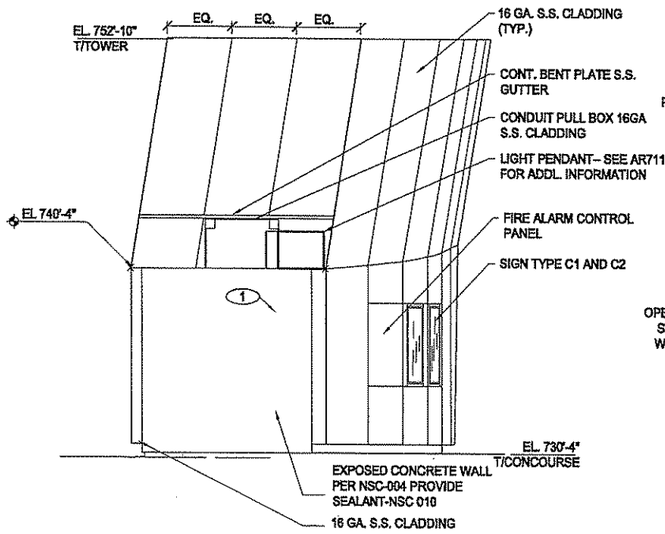

NORTH ELEVATION 6
1/4" = 1'-0"

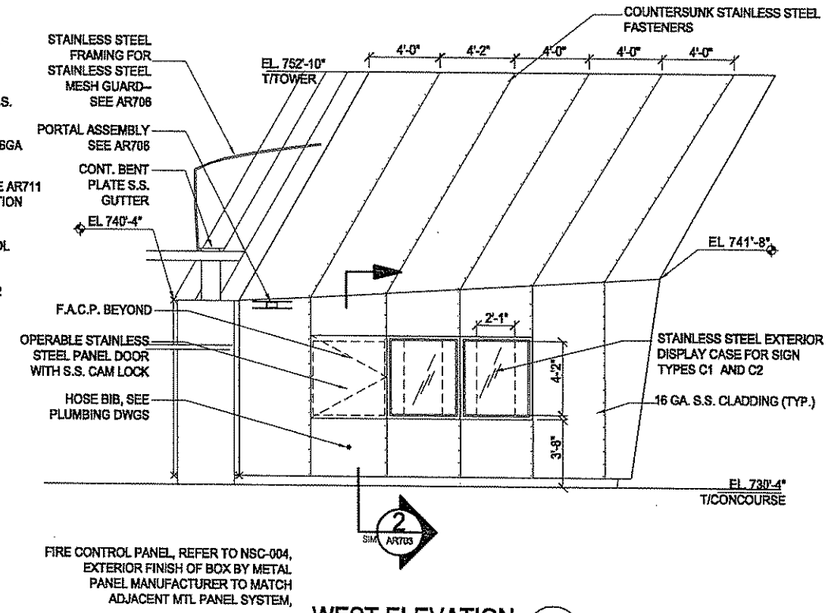

WEST ELEVATION 5
1/4" = 1'-0"

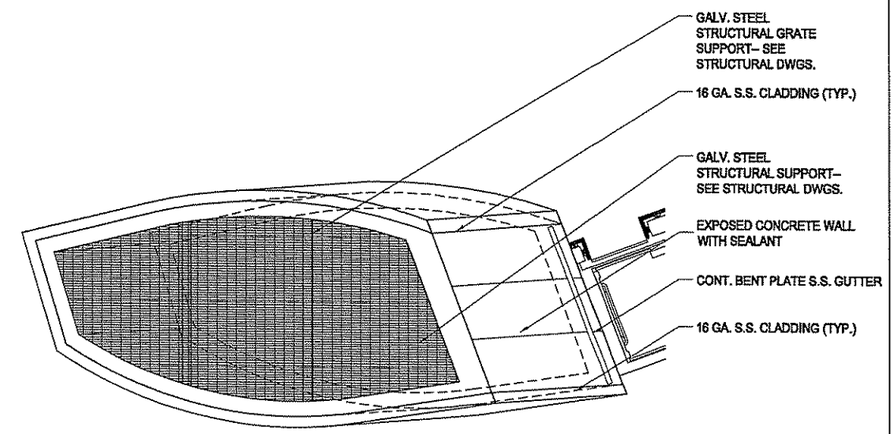

EXHAUST TOWER ROOF PLAN 2 AR109
1/4" = 1'-0"

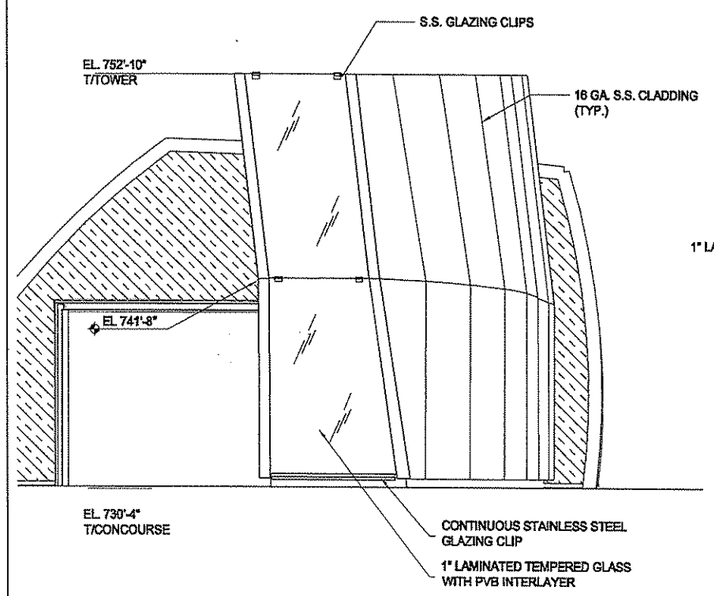

SOUTH ELEVATION 4
1/4" = 1'-0"

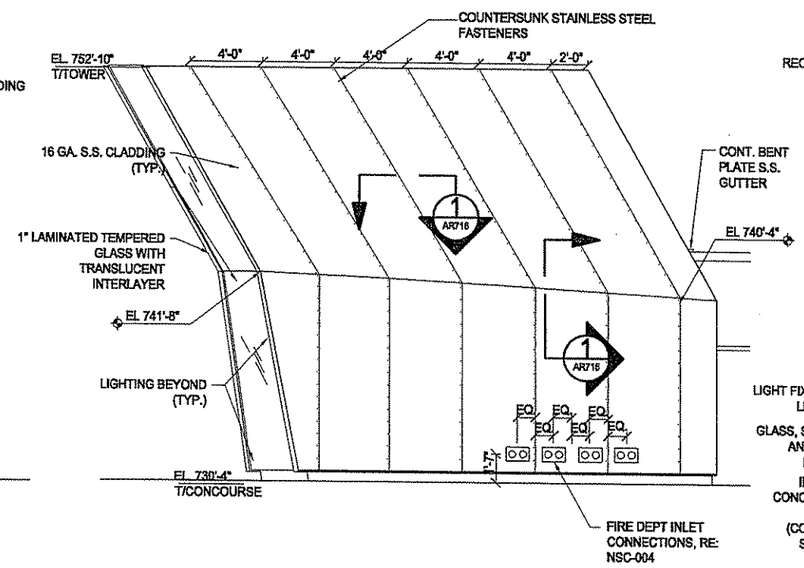

EAST ELEVATION 3
1/4" = 1'-0"

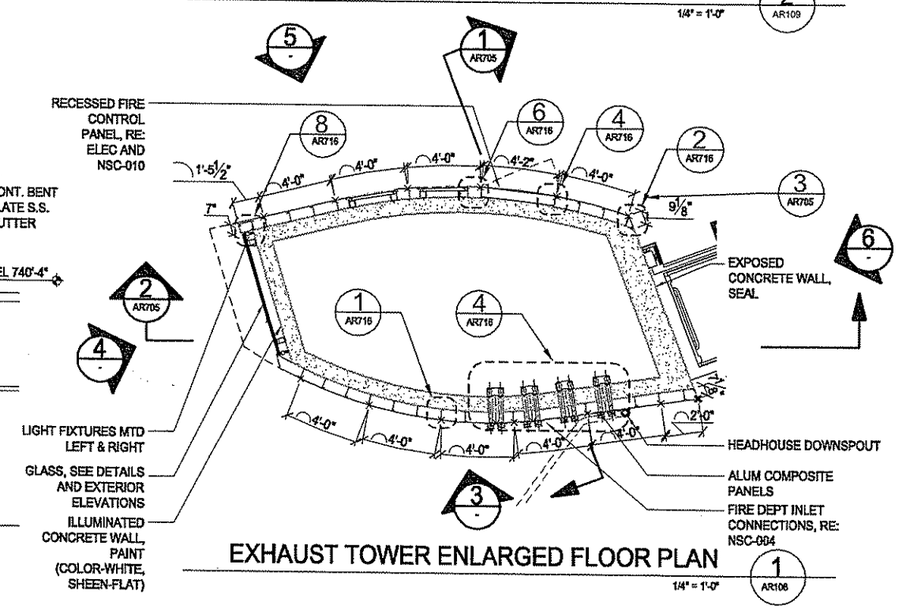

EXHAUST TOWER ENLARGED FLOOR PLAN 1 AR106
1/4" = 1'-0"

NOTES:

1. REFER TO AR516 & STRUCTURAL DRAWINGS FOR EMBED PLATE INFORMATION, TYPICAL.

The light in motion Collaborative
EDGE studio and Hoffmann & Associates

EDGE studio
5411 Penn Avenue
Pittsburgh, PA 15206
tel: 412.545.5005
fax: 412.545.5006

Hoffmann & Associates
223 Fourth Avenue
Pittsburgh, PA 15222
tel: 412.471.2470
fax: 412.471.2472

NO.	DATE	DESCRIPTION

REVISIONS

THE PREPARATION OF THIS DRAWING HAS BEEN FINANCED, IN PART, THROUGH A GRANT FROM THE U. S. DEPARTMENT OF TRANSPORTATION, FEDERAL TRANSIT ADMINISTRATION UNDER THE URBAN MASS TRANSPORTATION ACT OF 1964, AS AMENDED.

PROFESSIONAL SEAL
SIGNATURE

DMJM HARRIS | AECOM
FOUR GATEWAY CENTER
20TH FLOOR
PITTSBURGH, PA. 15222
APPROVED 4/29/08 DATE

DESIGNED	LMC
DRAWN	CFB
CHECKED	RSP
IN CHARGE	RSP
DATE APRIL 29, 2008	
SCALE 1/4"=1'-0"	

PORT AUTHORITY OF ALLEGHENY COUNTY
PITTSBURGH PENNSYLVANIA

NORTH SHORE CONNECTOR
GATEWAY STATION FINISHES
EXHAUST TOWER ELEVATIONS AND DETAILS

Port Authority
connecting people to life

CONTRACT NO.	NSC-010G		
DWG. NO.	AR704	SHT.	130

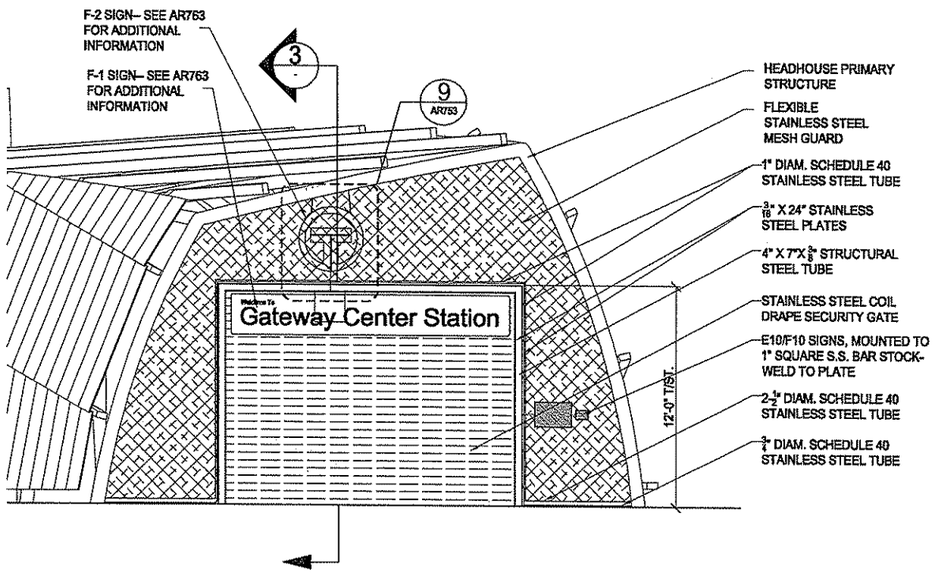

NORTH PORTAL ELEVATION 4 AR301
1/4" = 1'-0"

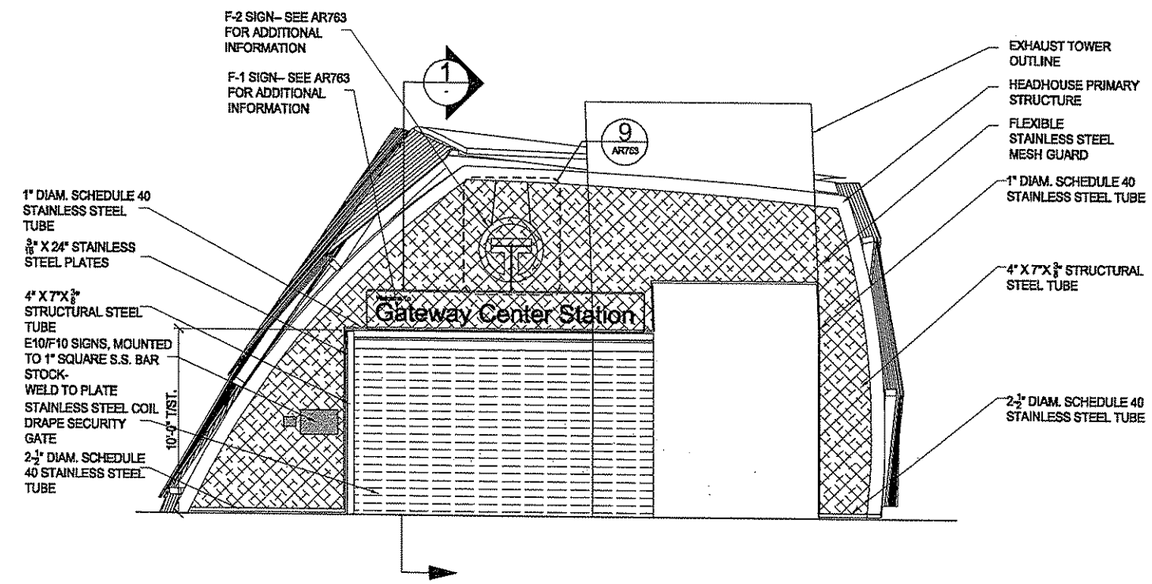

SOUTH PORTAL ELEVATION 2 AR301
1/4" = 1'-0"

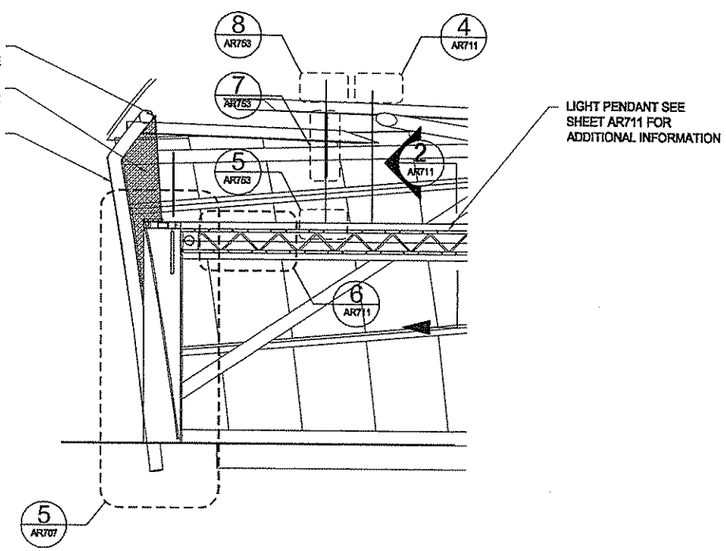

NORTH SECURITY GATE SECTION 3 AR301
1/4" = 1'-0"

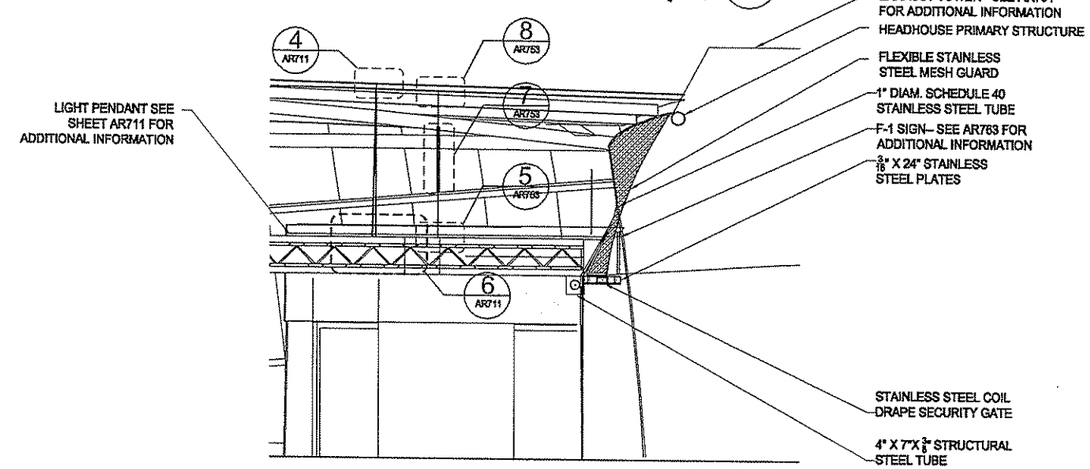

SOUTH SECURITY GATE SECTION 1 AR301
1/4" = 1'-0"

The light motion Collaborative
EDGE studio and Pfaffmann & Associates

EDGE studio
5411 Penn Avenue
Pittsburgh, PA 15206
tel 412/345 5000
fax 412/345 5005

Pfaffmann & Associates
223 Fourth Avenue
Pittsburgh, PA 15222
tel 412/471.2470
fax 412/471.2472

NO.	DATE	DESCRIPTION

REVISIONS

THE PREPARATION OF THIS DRAWING HAS BEEN FINANCED, IN PART, THROUGH A GRANT FROM THE U. S. DEPARTMENT OF TRANSPORTATION, FEDERAL TRANSIT ADMINISTRATION UNDER THE URBAN MASS TRANSPORTATION ACT OF 1964, AS AMENDED.

PRELIMINARY 2008

DMJM HARRIS | AECOM
FOUR GATEWAY CENTER
20TH FLOOR
PITTSBURGH, PA. 15222

4/29/08
APPROVED DATE

DESIGNED	LMC
DRAWN	CFB
CHECKED	MGF
IN CHARGE	RSP
DATE APRIL 29, 2008	
SCALE 1/4"=1'-0"	

PORT AUTHORITY OF ALLEGHENY COUNTY
PITTSBURGH PENNSYLVANIA

NORTH SHORE CONNECTOR
GATEWAY STATION FINISHES
ENTRANCE SECTIONS AND ELEVATIONS

Port Authority
connectingpgh to life

CONTRACT NO. NSC-010G
DWG. NO. AR706 SHT. 132

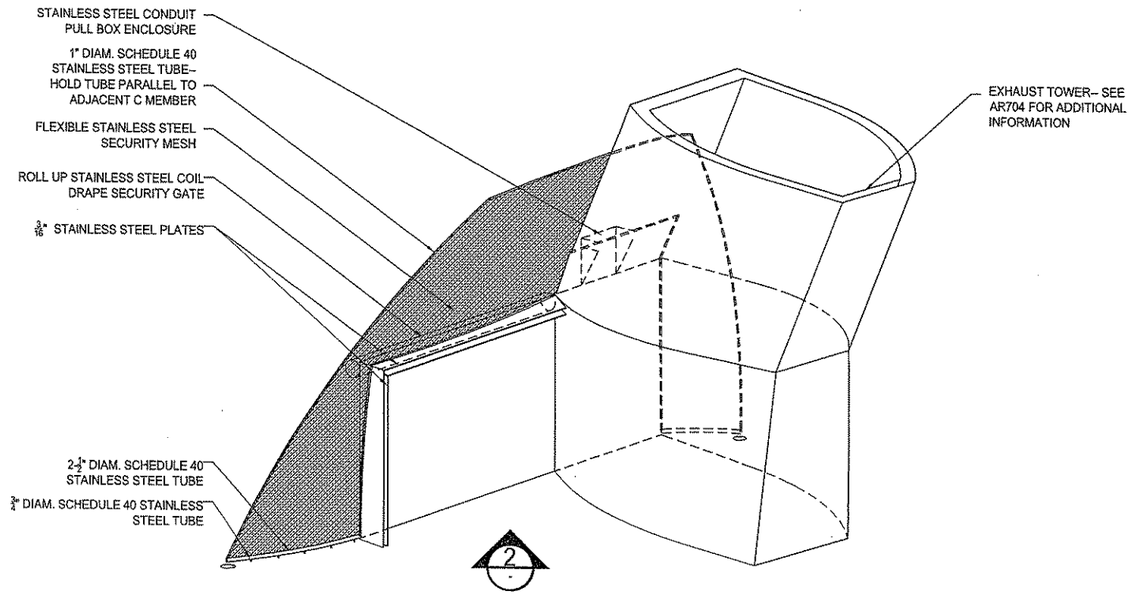

SOUTH PORTAL AXONOMETRIC (4)

N.T.S.

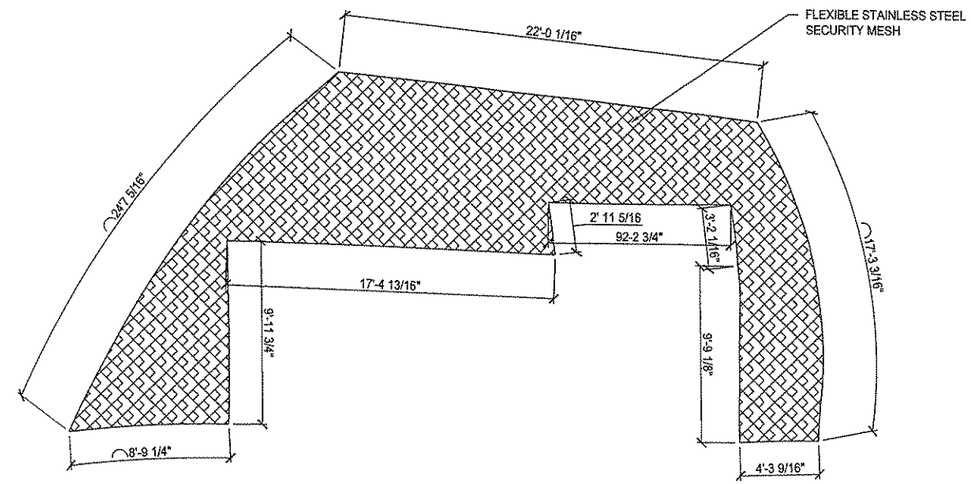

SOUTH PORTAL UNFOLDED MESH ELEVATION (2)

1/4" = 1'-0"

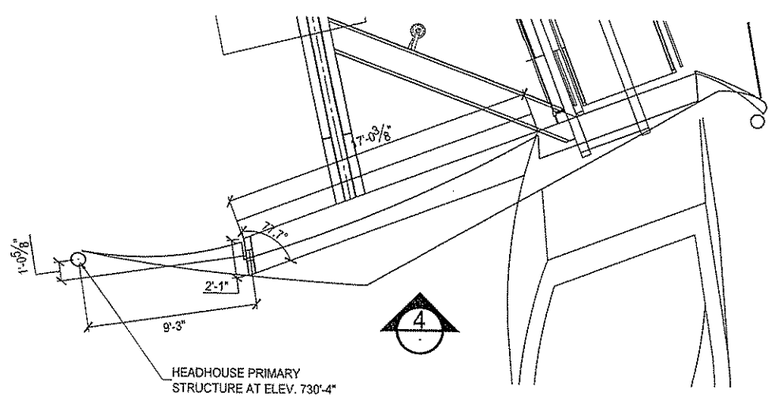

1/4"=1'-0"

4' 2' 0 4'

SOUTH PORTAL LOCATION PLAN (3)

1/4" = 1'-0"

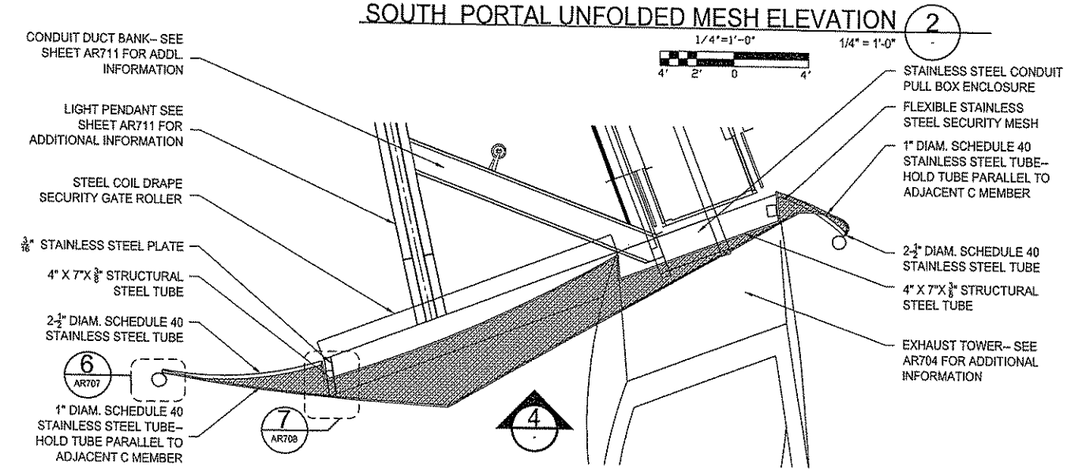

1/4"=1'-0"

4' 2' 0 4'

SOUTH PORTAL MATERIALS PLAN (1)

1/4" = 1'-0"

The light /motion Collaborative
EDGE Studio and Pfaffmann & Associates

EDGE studio
5411 Penn Avenue
Pittsburgh, PA 15206
tel: 412.345.5005
fax: 412.345.5006

Pfaffmann & Associates
323 Fourth Avenue
Pittsburgh, PA 15222
tel: 412.471.2470
fax: 412.471.2472

NO.	DATE	DESCRIPTION

REVISIONS

THE PREPARATION OF THIS DRAWING HAS BEEN FINANCED, IN PART, THROUGH A GRANT FROM THE U. S. DEPARTMENT OF TRANSPORTATION, FEDERAL TRANSIT ADMINISTRATION UNDER THE URBAN MASS TRANSPORTATION ACT OF 1964, AS AMENDED.

APPROVED SIGNATURE 2008

DMJM HARRIS | AECOM
FOUR GATEWAY CENTER
20TH FLOOR
PITTSBURGH, PA. 15222

APPROVED 4/29/08 DATE

DESIGNED	LMC
DRAWN	CFB
CHECKED	MGF
IN CHARGE	RSP
DATE APRIL 29, 2008	
SCALE	AS SHOWN

PORT AUTHORITY OF ALLEGHENY COUNTY
PITTSBURGH PENNSYLVANIA

NORTH SHORE CONNECTOR
GATEWAY STATION FINISHES
SECURITY GATE DETAILS

Port Authority
connecting people to life

CONTRACT NO. NSC-010G

DWG. NO. AR708 SHT. 134

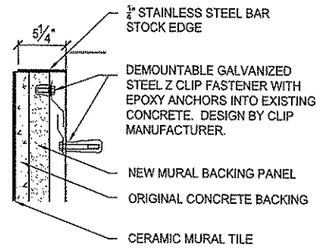

MURAL PANEL DETAIL 8 (1 1/2" = 1'-0")

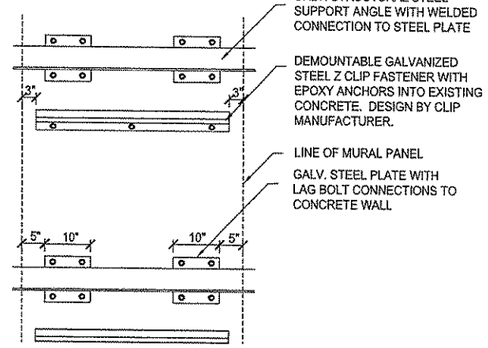

ENLARGED PANEL SUPPORT 5 (3/4" = 1'-0")

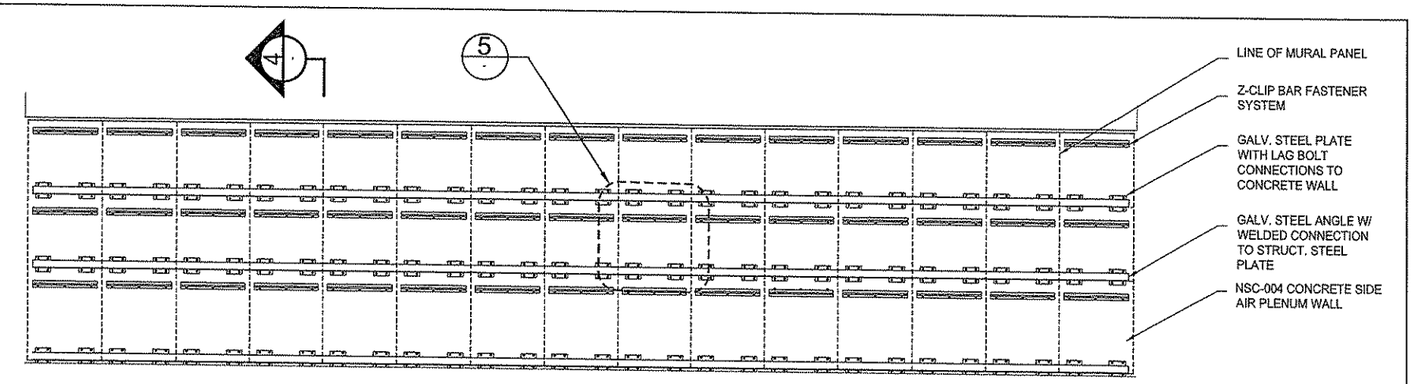

MURAL PANEL SUPPORT LAYOUT 2 (1/4" = 1'-0")

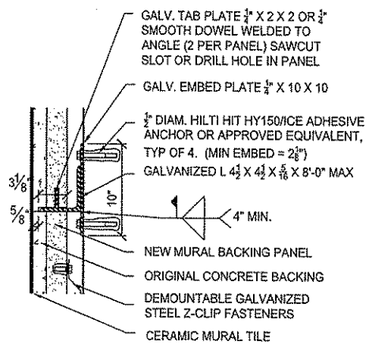

MURAL PANEL DETAIL 7 (1 1/2" = 1'-0")

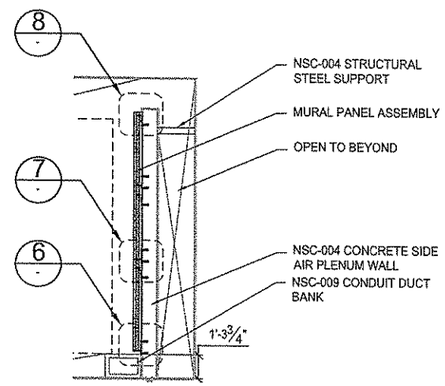

BEARDON MURAL SECTION 4 (1/4" = 1'-0")

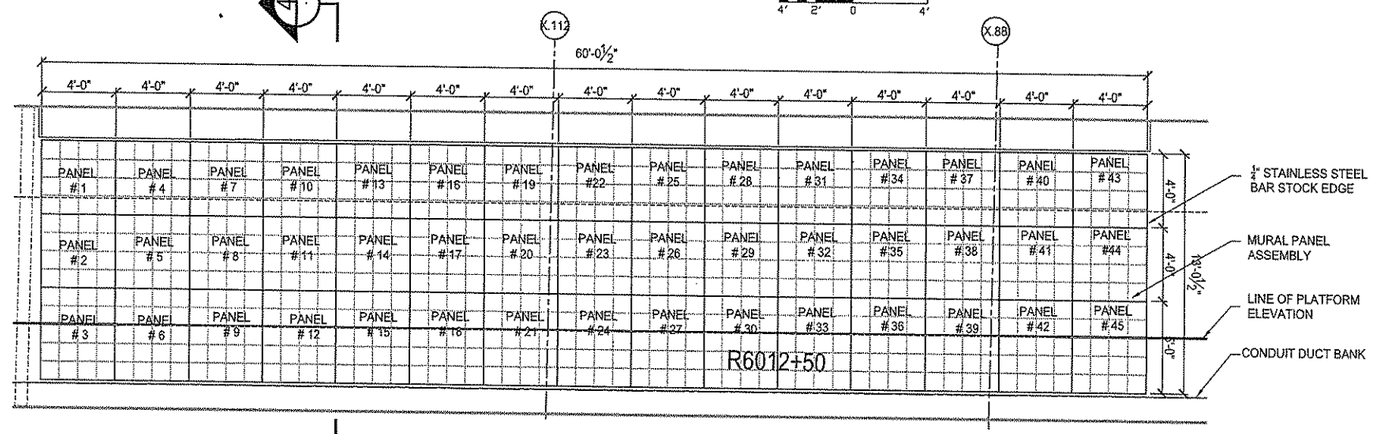

BEARDON MURAL PANEL LAYOUT 1 (1/4" = 1'-0") AR701

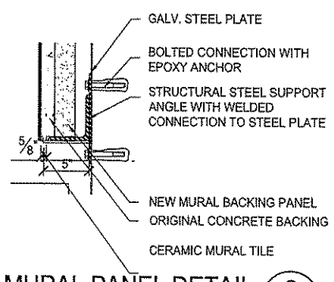

MURAL PANEL DETAIL 6 (1 1/2" = 1'-0")

KEY

LINETYPE	NOTE
————	STATION SHELL CUT LINE - IN CONTRACT NSC-004
————	STATION SHELL BEYOND - IN CONTRACT NSC-004

GENERAL NOTE: REMOVAL AND REINSTALLATION OF MURAL TILE REQUIRES A SPECIALIZED CONSERVATION CONSULTANT AS PART OF THE NSC-004 CONTRACT: SEE SECTION 3310 CERAMIC TILE MURAL CONSERVATION

The light /motion Collaborative
EDGE studio and Flatmann & Associates

EDGE studio
5411 Penn Avenue
Pittsburgh, PA 15206
tel: 412/441.6005
fax: 412/345.2006

Flatmann & Associates
223 Fourth Avenue
Pittsburgh, PA 15222
tel: 412/471.2470
fax: 412/471.2472

NO.	DATE	DESCRIPTION

REVISIONS

THE PREPARATION OF THIS DRAWING HAS BEEN FINANCED, IN PART, THROUGH A GRANT FROM THE U. S. DEPARTMENT OF TRANSPORTATION, FEDERAL TRANSIT ADMINISTRATION UNDER THE URBAN MASS TRANSPORTATION ACT OF 1964, AS AMENDED.

APPROVED SIGNATURE 2008

DMJM HARRIS | AECOM
FOUR GATEWAY CENTER
20TH FLOOR
PITTSBURGH, PA. 15222

APPROVED 4/29/08 DATE

DESIGNED	LMC
DRAWN	CFB
CHECKED	RSP
IN CHARGE	RSP
DATE APRIL 29, 2008	
SCALE	AS SHOWN

PORT AUTHORITY OF ALLEGHENY COUNTY
PITTSBURGH PENNSYLVANIA

NORTH SHORE CONNECTOR
GATEWAY STATION FINISHES
MURAL DETAILS

Port Authority
connecting people to life

CONTRACT NO. NSC-010G
DWG. NO. AR709 SHT. 135

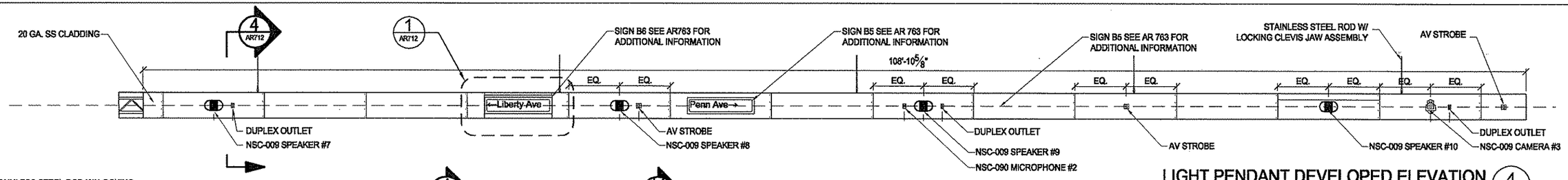

LIGHT PENDANT DEVELOPED ELEVATION 4
1/4" = 1'-0"

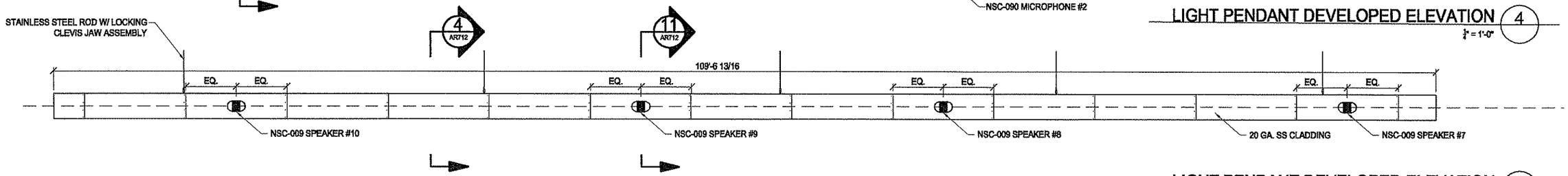

LIGHT PENDANT DEVELOPED ELEVATION 3
1/4" = 1'-0"

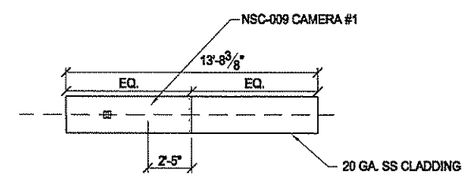

CONDUIT TRUSS ELEVATION 5
1/4" = 1'-0"

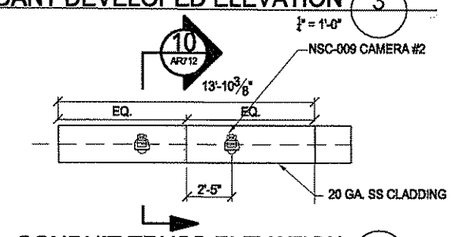

CONDUIT TRUSS ELEVATION 2
1/4" = 1'-0"

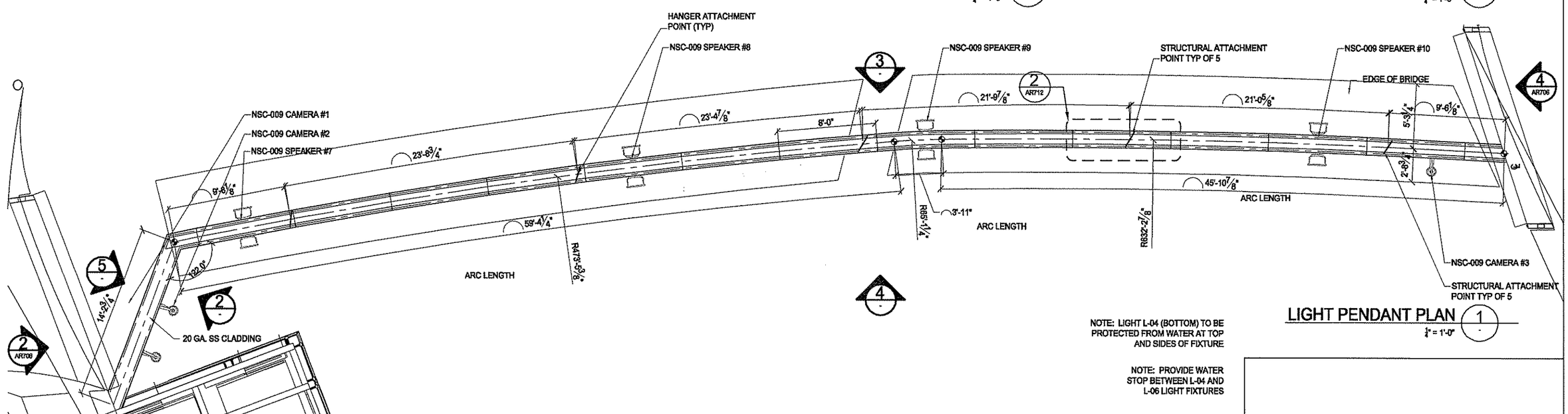

LIGHT PENDANT PLAN 1
1/4" = 1'-0"

NOTE: LIGHT L-04 (BOTTOM) TO BE PROTECTED FROM WATER AT TOP AND SIDES OF FIXTURE

NOTE: PROVIDE WATER STOP BETWEEN L-04 AND L-06 LIGHT FIXTURES

The light /motion Collaborative
EDGE studio and Pfeifmann & Associates

EDGE studio
5411 Penn Avenue
Pittsburgh, PA 15206
tel: 412.345.5000
fax: 412.345.5006

Pfeifmann & Associates
223 Fourth Avenue
Pittsburgh, PA 15222
tel: 412.471.2470
fax: 412.471.2472

NO.	DATE	DESCRIPTION

REVISIONS

THE PREPARATION OF THIS DRAWING HAS BEEN FINANCED, IN PART, THROUGH A GRANT FROM THE U. S. DEPARTMENT OF TRANSPORTATION, FEDERAL TRANSIT ADMINISTRATION UNDER THE URBAN MASS TRANSPORTATION ACT OF 1964, AS AMENDED.

DMJM HARRIS | AECOM
FOUR GATEWAY CENTER
20TH FLOOR
PITTSBURGH, PA. 15222

APPROVED — DATE 4/29/08

DESIGNED	LMC
DRAWN	CFB
CHECKED	MGF
IN CHARGE	RSP
DATE	APRIL 29, 2008
SCALE	1/4"=1'-0"

PORT AUTHORITY OF ALLEGHENY COUNTY
PITTSBURGH PENNSYLVANIA

NORTH SHORE CONNECTOR
GATEWAY STATION FINISHES

LIGHT PENDANT PLAN AND ELEVATIONS

Port Authority
connect people to life

CONTRACT NO.	NSC-010G		
DWG. NO.	AR711	SHT.	136

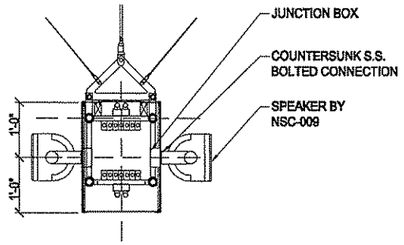

SPEAKER MOUNT DTL. (11)

1/2"=1'-0"
2' 1' 0 2'

$\frac{1}{2}$" = 1'-0"

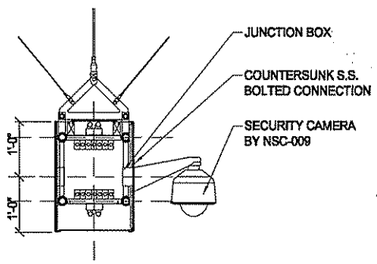

CAMERA MOUNT DTL. (10)

1/2"=1'-0"
2' 1' 0 2'

$\frac{1}{2}$" = 1'-0"

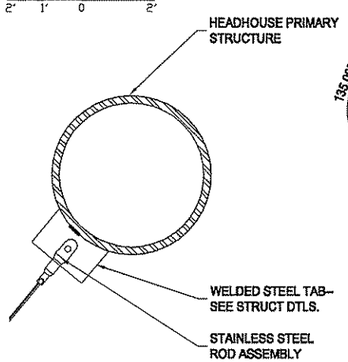

CONNECTION DETAIL (9)

3" = 1'-0"

3"=1'-0"
3"1 1/2" 0 3"

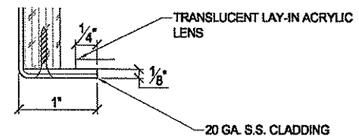

EDGE DETAIL (8)

FULL SIZE
0" 1/2" 1"

FULL SIZE

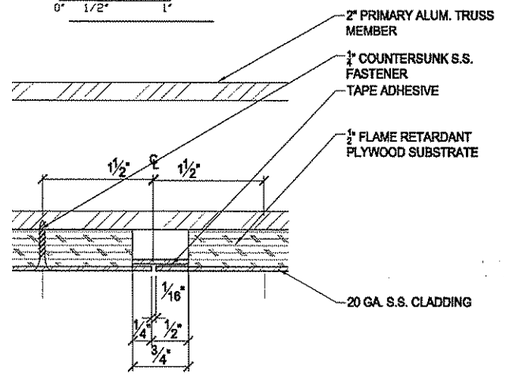

CONNECTION DETAIL (7)

FULL SIZE
0" 1/2" 1"

FULL SIZE

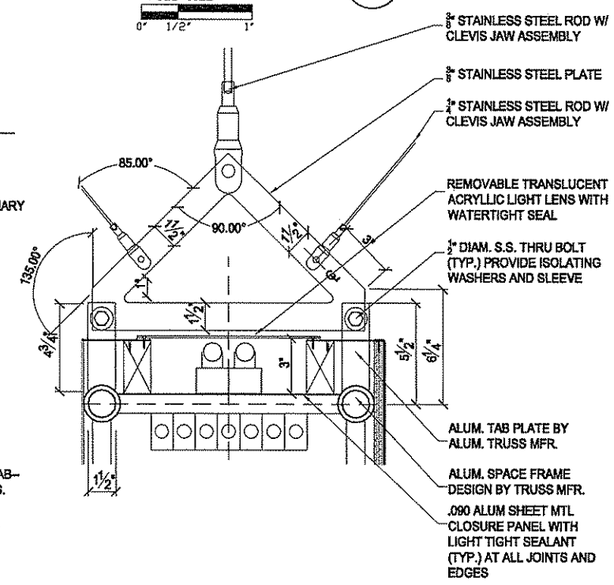

CONNECTION DETAIL (6)

3" = 1'-0"

3"=1'-0"
3"1 1/2" 0 3"

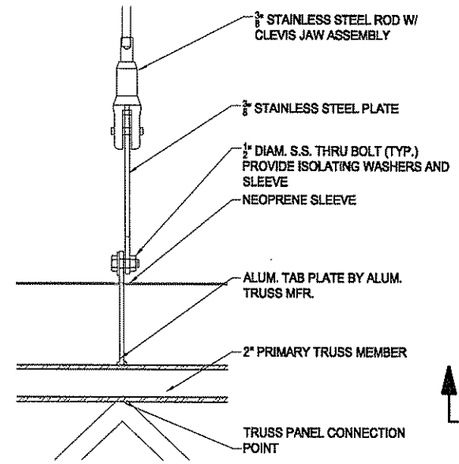

CONNECTION DETAIL (5)

3" = 1'-0"

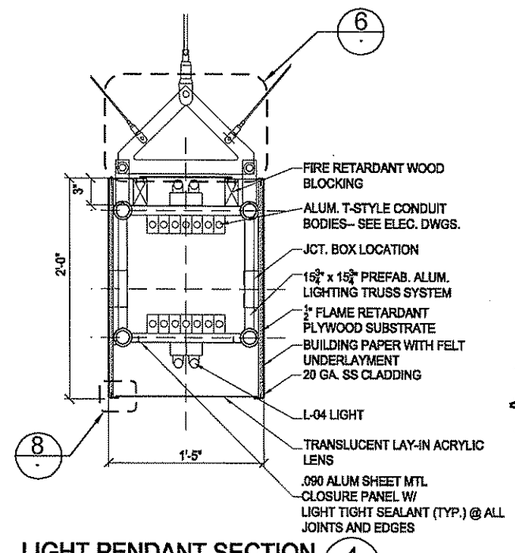

LIGHT PENDANT SECTION (4)

1 1/2"=1'-0"
6" 3" 0 6"

1 1/2" = 1'-0"

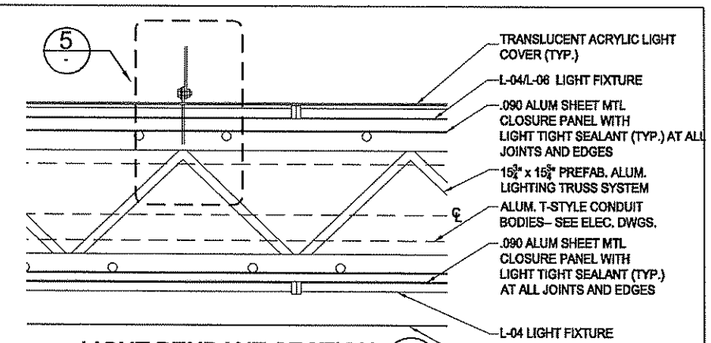

LIGHT PENDANT SECTION (3)

1 1/2"=1'-0"
6" 3" 0 6"

1 1/2" = 1'-0"

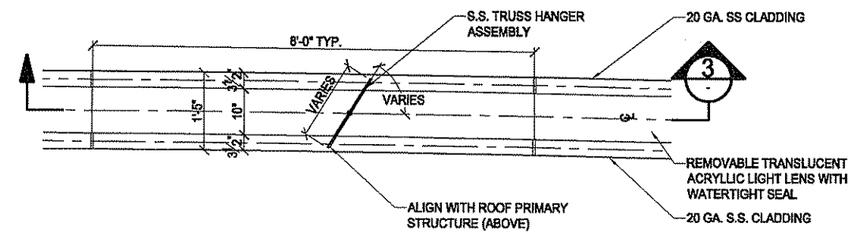

LIGHT PENDANT PLAN DETAIL (2) AR711

1 1/2"=1'-0"
6" 3" 0 6"

1 1/2" = 1'-0"

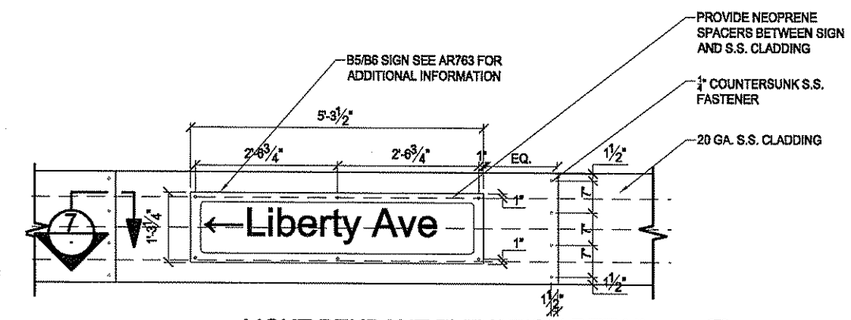

LIGHT PENDANT ELEVATION DETAIL (1) AR711

3/4" = 1'-0"

3/4"=1'-0"
1' 6" 0 1'

The light /motion Collaborative
EDGE studio and Pfaffmann & Associates

EDGE studio
5411 Penn Avenue
Pittsburgh, PA 15206
tel: 412/345.5005
fax: 412/345.5006

Pfaffmann & Associates
203 Fourth Avenue
Pittsburgh, PA 15222
tel: 412/471.2470
fax: 412/471.2472

NO.	DATE	DESCRIPTION

REVISIONS

THE PREPARATION OF THIS DRAWING HAS BEEN FINANCED, IN PART, THROUGH A GRANT FROM THE U. S. DEPARTMENT OF TRANSPORTATION, FEDERAL TRANSIT ADMINISTRATION UNDER THE URBAN MASS TRANSPORTATION ACT OF 1964, AS AMENDED.

PROFESSIONAL ENGINEER SEAL

SIGNATURE

DMJM HARRIS | AECOM
FOUR GATEWAY CENTER
20TH FLOOR
PITTSBURGH, PA. 15222

APPROVED 4/29/08 DATE

DESIGNED	LMC
DRAWN	CFB
CHECKED	MGF
IN CHARGE	RSP
DATE APRIL 29, 2008	
SCALE	AS SHOWN

PORT AUTHORITY OF ALLEGHENY COUNTY
PITTSBURGH PENNSYLVANIA

NORTH SHORE CONNECTOR
GATEWAY STATION FINISHES

LIGHT PENDANT DETAILS

Port Authority
connecting people to city

CONTRACT NO.	NSC-010G
DWG. NO. AR712	SHT. 137

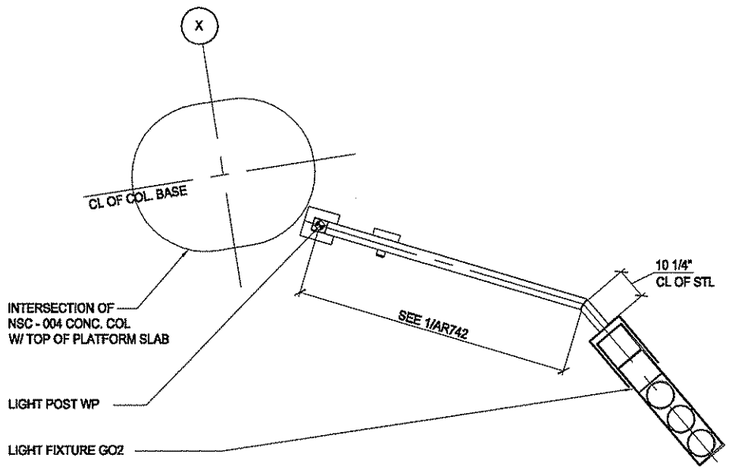

TYPICAL LIGHTPOST PLAN (6 / AR742)

1/2" = 1'-0"

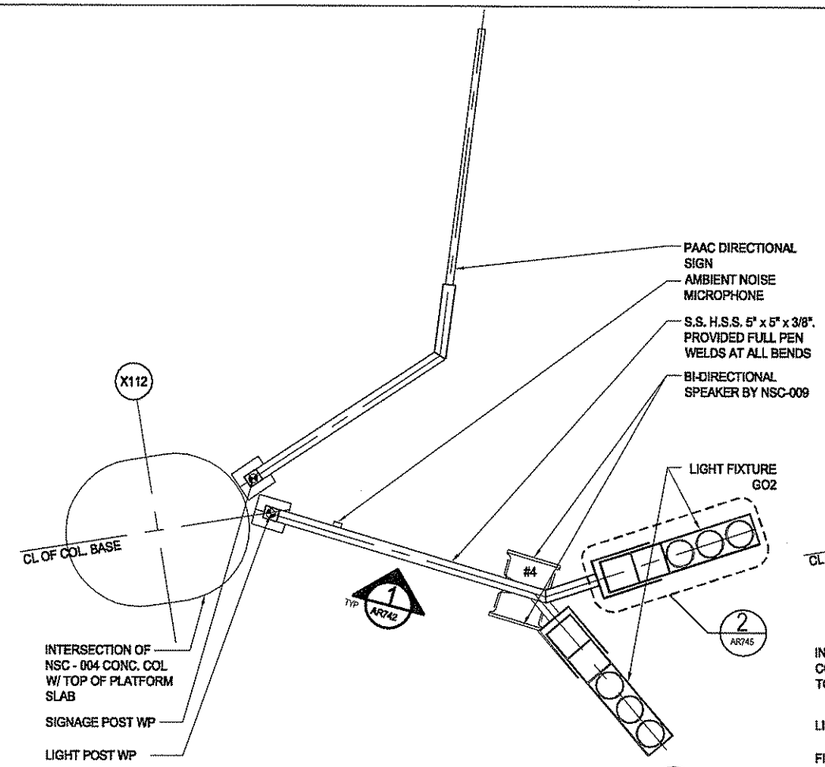

LIGHTPOST 4 & SIGNPOST (4 / -)

1/2" = 1'-0"

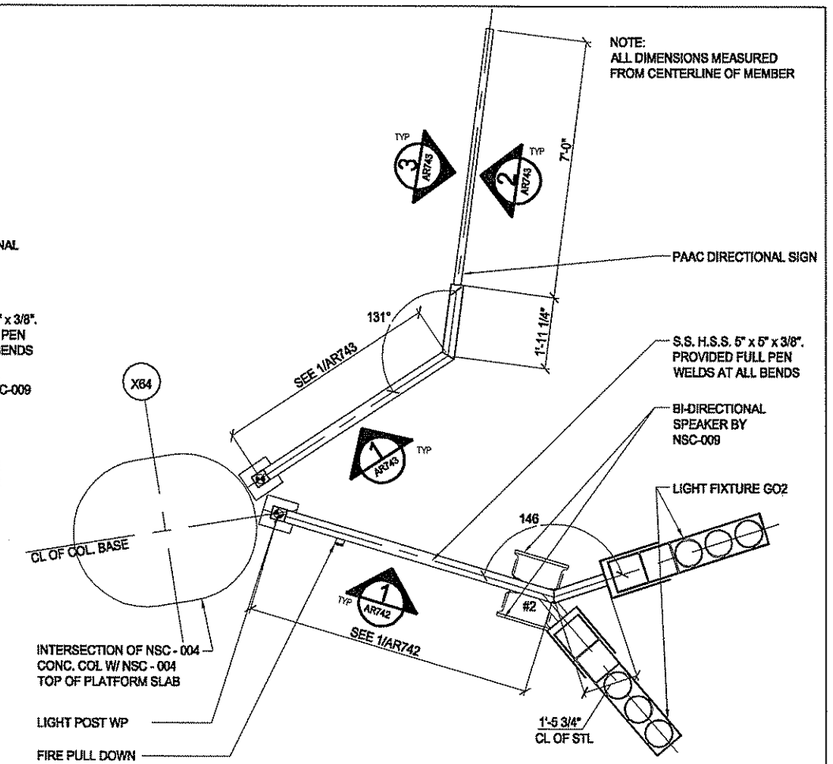

LIGHTPOST 2 & SIGNPOST (2 / AR743)

1/2" = 1'-0"

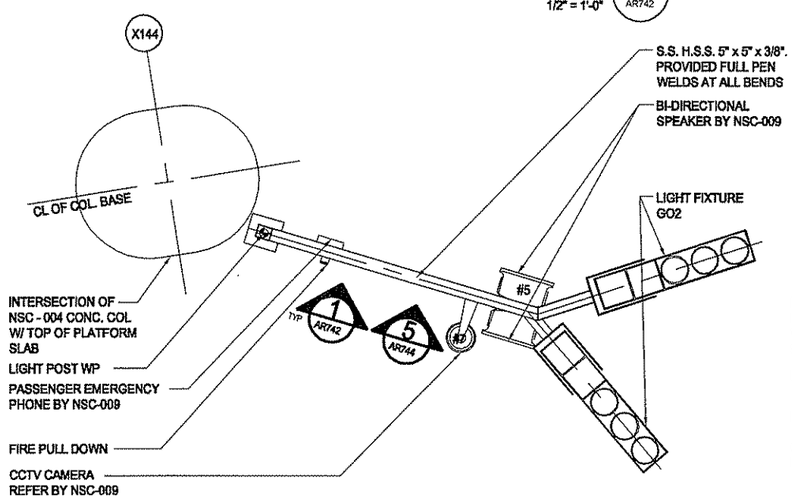

LIGHTPOST 5 (5 / -)

1/2" = 1'-0"

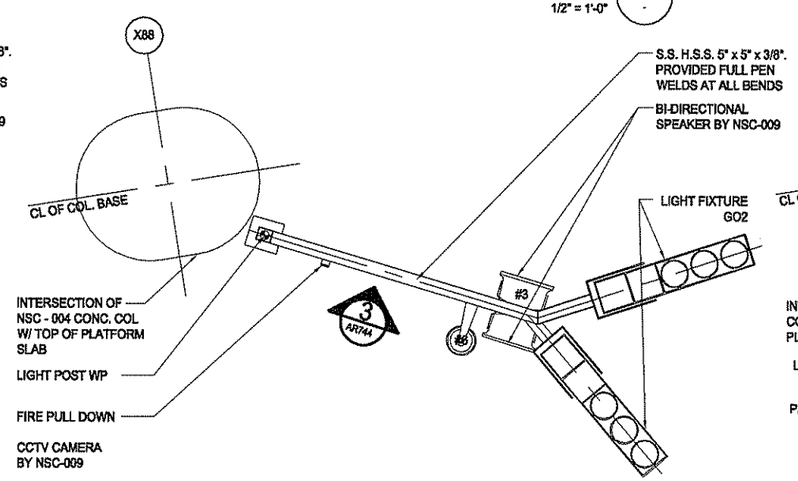

LIGHTPOST 3 (3 / -)

1/2" = 1'-0"

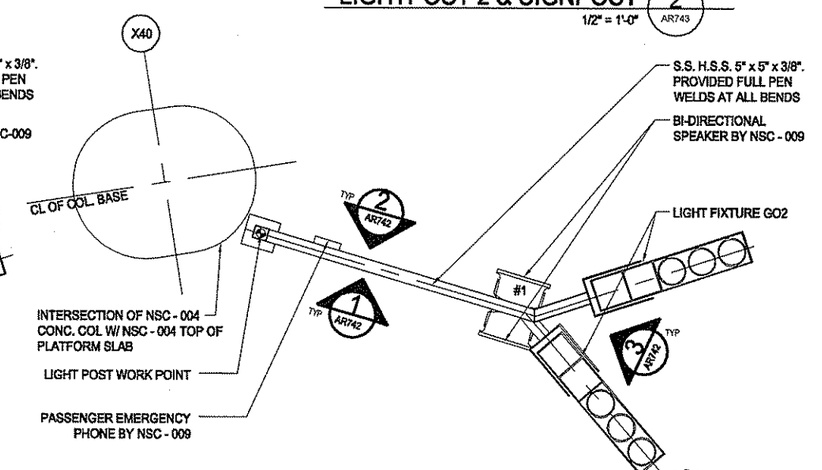

LIGHTPOST 1 (1 / AR742)

1/2" = 1'-0"

The light / motion Collaborative
EDGE studio
5411 Penn Avenue
Pittsburgh, PA 15206
tel: 412/945.5005
fax: 412/945.5006

Pfaffmann & Associates
223 Fourth Avenue
Pittsburgh, PA 15222
tel: 412/471.2470
fax: 412/471.2472

NO.	DATE	DESCRIPTION

REVISIONS

THE PREPARATION OF THIS DRAWING HAS BEEN FINANCED, IN PART, THROUGH A GRANT FROM THE U. S. DEPARTMENT OF TRANSPORTATION, FEDERAL TRANSIT ADMINISTRATION UNDER THE URBAN MASS TRANSPORTATION ACT OF 1964, AS AMENDED.

PENNSYLVANIA REGISTERED PROFESSIONAL ENGINEER
SIGNATURE 2008

DMJM HARRIS | AECOM
FOUR GATEWAY CENTER
20TH FLOOR
PITTSBURGH, PA. 15222

APPROVED DATE 4/29/08

DESIGNED	LMC
DRAWN	SJM
CHECKED	MGF
IN CHARGE	RSP
DATE APRIL 29, 2008	
SCALE 1/2"=1'-0"	

2' 1' 0 2'

PORT AUTHORITY OF ALLEGHENY COUNTY
PITTSBURGH PENNSYLVANIA

NORTH SHORE CONNECTOR
GATEWAY STATION FINISHES
LIGHT POST PLANS
2 OF 2

Port Authority
connecting people to life

CONTRACT NO. NSC-010G
DWG. NO. AR741 SHT. 155

NOTE:
ALL DIMENSIONS MEASURED
FROM CENTERLINE OF MEMBER

LIGHT POST POWER SCHEDULE

	POWER		FIRE		COMMUNICATION (NSC-009 CONTRACT)			
LIGHT POST	FLOODLIGHT SYSTEM	STATION ID SIGN	ADA STROBES	FIRE ALARM PULL STATION	EMERGENCY PHONE	BI-DIRECTIONAL SPEAKERS	CCTV	AMBIENT NOISE MICROPHONE
1	•	•	•		•	•		
2	•			•		•		
3	•	•	•	•		•	•	
4	•					•		•
5	•	•	•	•	•	•	•	

REFER TO AR103 FOR POST LOCATIONS

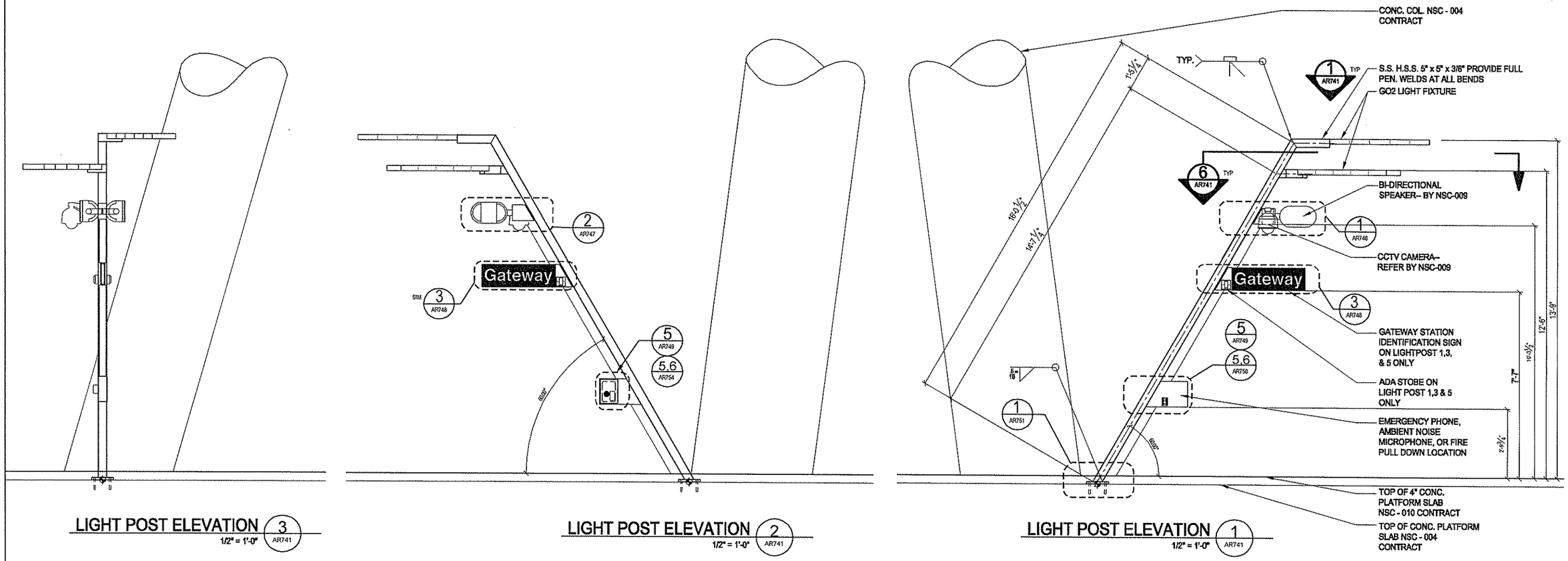

The light / motion Collaborative
EDGE studio and Wallmann & Associates

EDGE studio
5411 Penn Avenue
Pittsburgh, PA 15206
tel 412.545.5005
fax 412.545.5006

Wallmann & Associates
203 Fourth Avenue
Pittsburgh, PA 15222
tel 412.471.2470
fax 412.471.2472

NO.	DATE	DESCRIPTION

REVISIONS

THE PREPARATION OF THIS DRAWING HAS BEEN FINANCED, IN PART, THROUGH A GRANT FROM THE U. S. DEPARTMENT OF TRANSPORTATION, FEDERAL TRANSIT ADMINISTRATION UNDER THE URBAN MASS TRANSPORTATION ACT OF 1964, AS AMENDED.

PENNSYLVANIA REGISTERED ARCHITECT
RICHARD SPERRY PARTNER
PA LICENSE NO. 14000
4/29/2008

DMJM HARRIS | AECOM
FOUR GATEWAY CENTER
20TH FLOOR
PITTSBURGH, PA. 15222

David P. Sperry 4/29/08
APPROVED DATE

DESIGNED	LMC
DRAWN	SJM
CHECKED	MGF
IN CHARGE	RSP
DATE APRIL 29, 2008	
SCALE 1/2"=1'-0"	

2' 1' 0 2'

PORT AUTHORITY OF ALLEGHENY COUNTY
PITTSBURGH PENNSYLVANIA

NORTH SHORE CONNECTOR
GATEWAY STATION FINISHES
LIGHT POST ELEVATIONS
1 OF 2

Port Authority
connect people to life

CONTRACT NO. NSC-010G
DWG. NO. AR742
SHT. 156

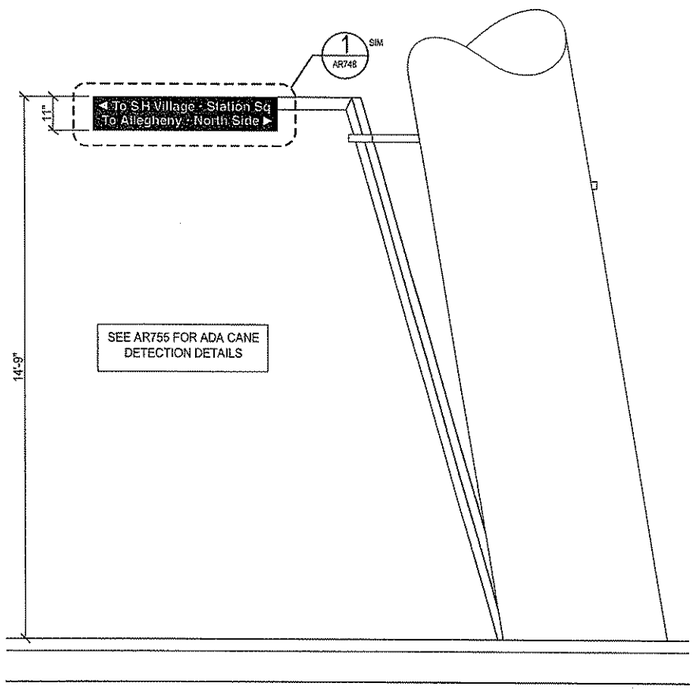

LIGHT POST ELEVATION 3 (AR741)
1/2" = 1'-0"

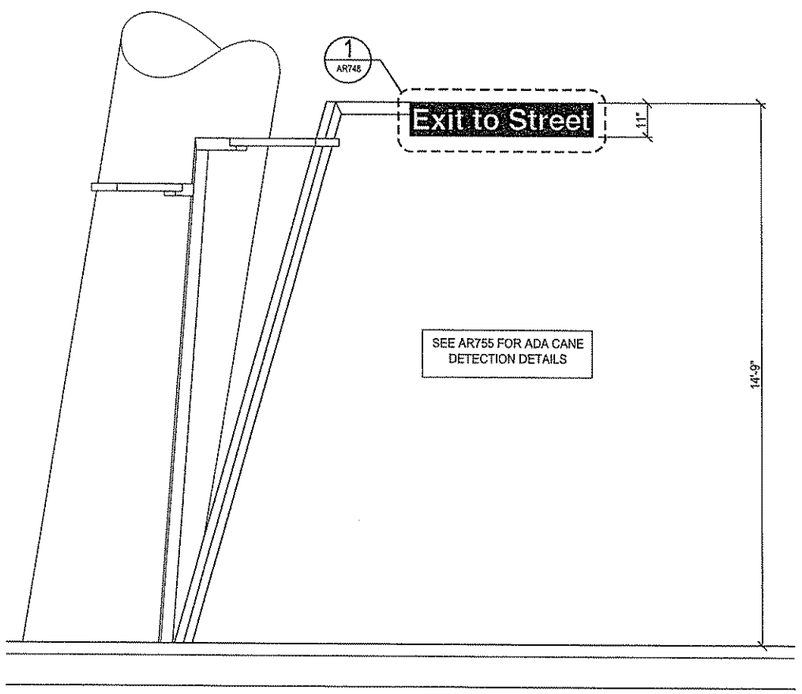

LIGHT POST ELEVATION 2 (AR741)
1/2" = 1'-0"

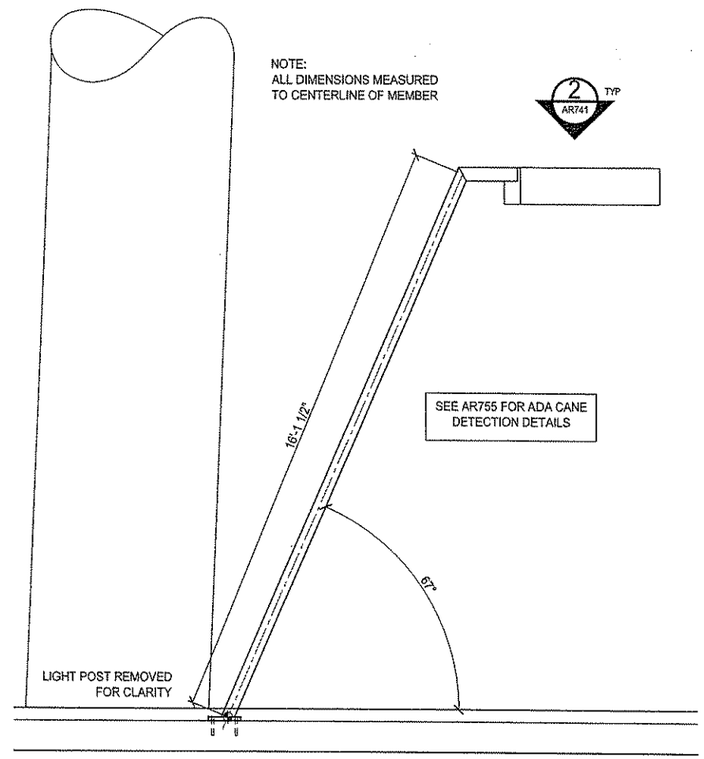

LIGHT POST ELEVATION 1 (AR741)
1/2" = 1'-0"

The light/motion Collaborative
EDGE studio and Pfaffmann & Associates

EDGE studio
5411 Penn Avenue
Pittsburgh, PA 15206
tel: 412.345.5006
fax: 412.345.5006

Pfaffmann & Associates
220 Fourth Avenue
Pittsburgh, PA 15222
tel: 412.471.2470
fax: 412.471.2472

NO.	DATE	DESCRIPTION

REVISIONS

THE PREPARATION OF THIS DRAWING HAS BEEN FINANCED, IN PART, THROUGH A GRANT FROM THE U. S. DEPARTMENT OF TRANSPORTATION, FEDERAL TRANSIT ADMINISTRATION UNDER THE URBAN MASS TRANSPORTATION ACT OF 1964, AS AMENDED.

APPROVAL SIGNATURE 2008

DMJM HARRIS | AECOM
FOUR GATEWAY CENTER
20TH FLOOR
PITTSBURGH, PA. 15222

APPROVED 4/29/08 DATE

DESIGNED	LMC
DRAWN	SJM
CHECKED	MGF
IN CHARGE	RSP
DATE APRIL 29, 2008	
SCALE 1/2"=1'-0"	

2' 1' 0 2'

PORT AUTHORITY OF ALLEGHENY COUNTY
PITTSBURGH PENNSYLVANIA

NORTH SHORE CONNECTOR
GATEWAY STATION FINISHES
LIGHT POST ELEVATIONS
2 OF 2

Port Authority
connecting people to life

CONTRACT NO. NSC-010G
DWG. NO. AR743 SHT. 157

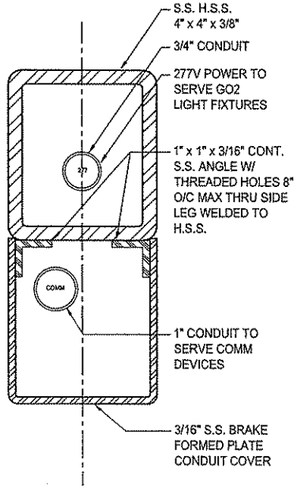

CONDUIT SECTION 9

6"=1'-0" 6" = 1'-0"

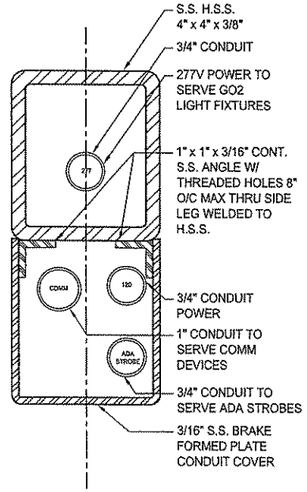

CONDUIT SECTION 7

6"=1'-0" 6" = 1'-0"

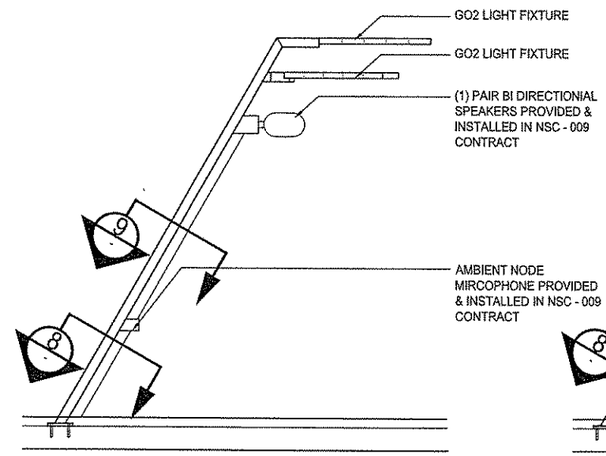

LIGHT POST 4 ELEVATION 4

1/2"=1'-0" 1/2" = 1'-0"

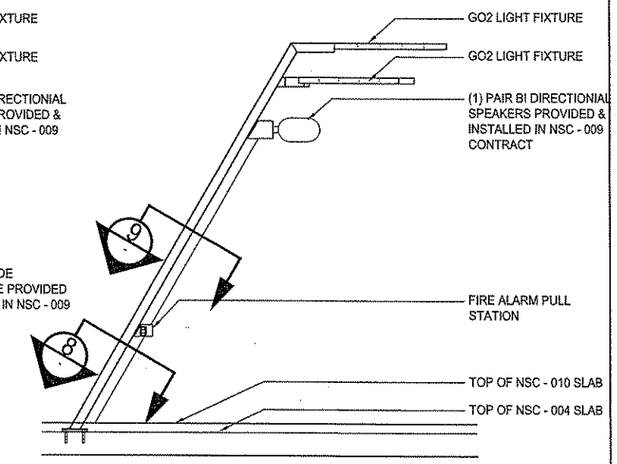

LIGHT POST 2 ELEVATION 2

1/2"=1'-0" 1/2" = 1'-0"

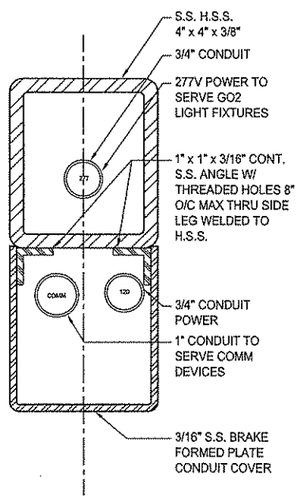

CONDUIT SECTION 8

6"=1'-0" 6" = 1'-0"

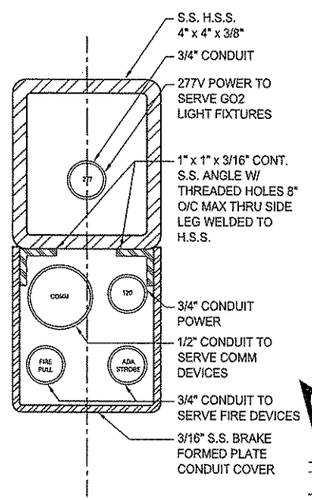

CONDUIT SECTION 6

6"=1'-0" 6" = 1'-0"

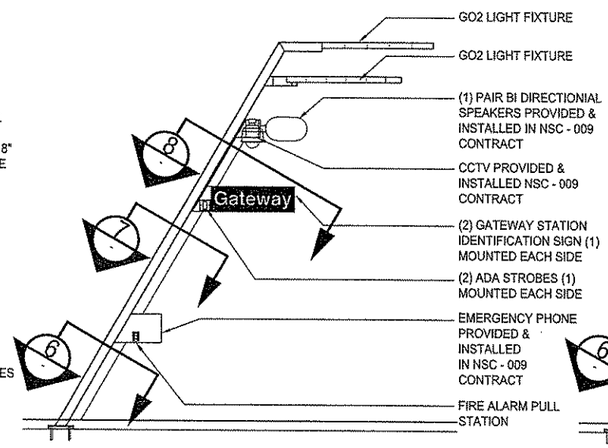

LIGHT POST 5 ELEVATION 5

1/2"=1'-0" 1/2" = 1'-0"

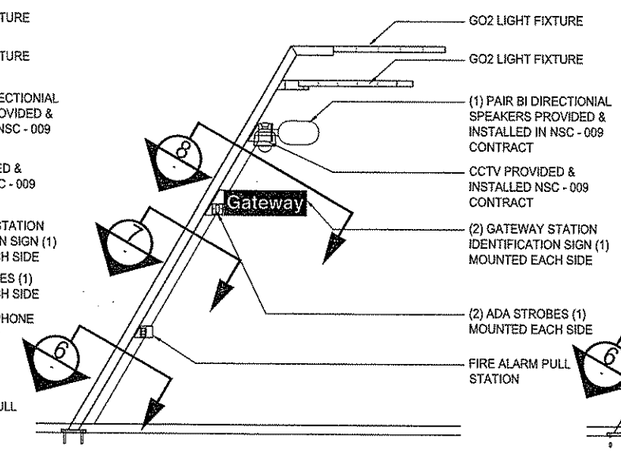

LIGHT POST 3 ELEVATION 3

1/2"=1'-0" 1/2" = 1'-0"

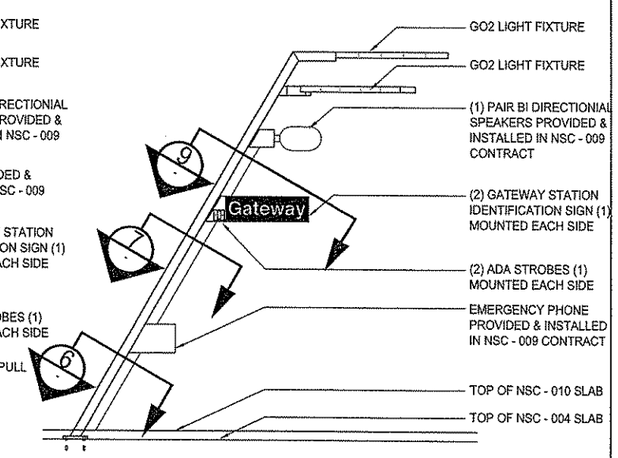

LIGHT POST 1 ELEVATION 1

1/2"=1'-0" 1/2" = 1'-0"

The light/motion Collaborative
EDGE studio and Pfaffmann & Associates

EDGE studio
5411 Penn Avenue
Pittsburgh, PA. 15206
tel: 412.945.5005
fax: 412.945.5006

Pfaffmann & Associates
323 Fourth Avenue
Pittsburgh, PA. 15222
tel: 412.471.2470
fax: 412.471.2472

NO.	DATE	DESCRIPTION

REVISIONS

THE PREPARATION OF THIS DRAWING HAS BEEN FINANCED, IN PART, THROUGH A GRANT FROM THE U. S. DEPARTMENT OF TRANSPORTATION, FEDERAL TRANSIT ADMINISTRATION UNDER THE URBAN MASS TRANSPORTATION ACT OF 1964, AS AMENDED.

SIGNATURE

DMJM HARRIS | AECOM
FOUR GATEWAY CENTER
20TH FLOOR
PITTSBURGH, PA. 15222

APPROVED 4/29/08 DATE

DESIGNED	LMC
DRAWN	SJM
CHECKED	MGF
IN CHARGE	RSP
DATE APRIL 29, 2008	
SCALE	VARIES

PORT AUTHORITY OF ALLEGHENY COUNTY
PITTSBURGH PENNSYLVANIA

NORTH SHORE CONNECTOR
GATEWAY STATION FINISHES
CONDUIT DETAILS
1 OF 1

Port Authority
connecting people to life

CONTRACT NO. NSC-010G
DWG. NO. AR744 SHT. 158

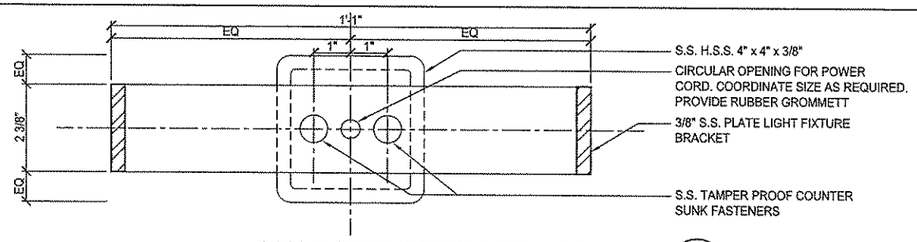

LIGHT FIXTURE BRACKET SECTION 4
6" = 1'-0"

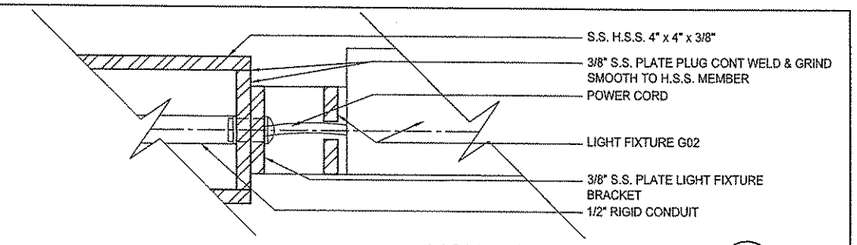

LIGHT FIXTURE SECTION 3
6" = 1'-0"

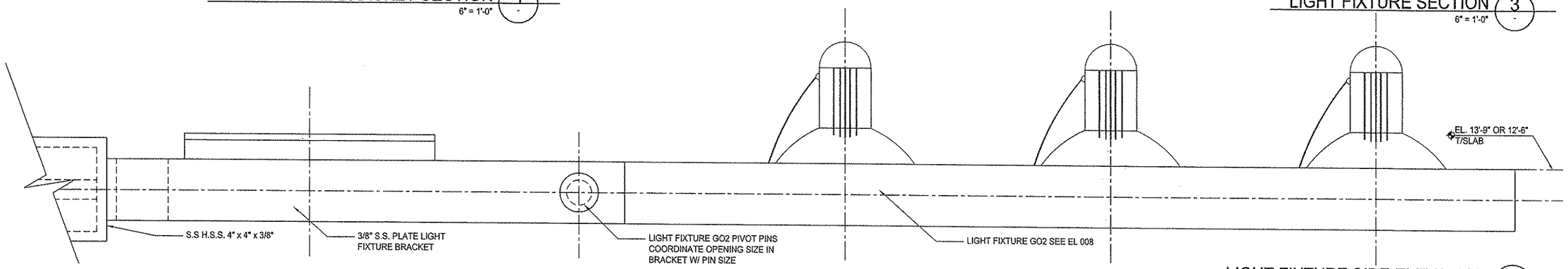

LIGHT FIXTURE SIDE ELEVATION 2
6" = 1'-0"

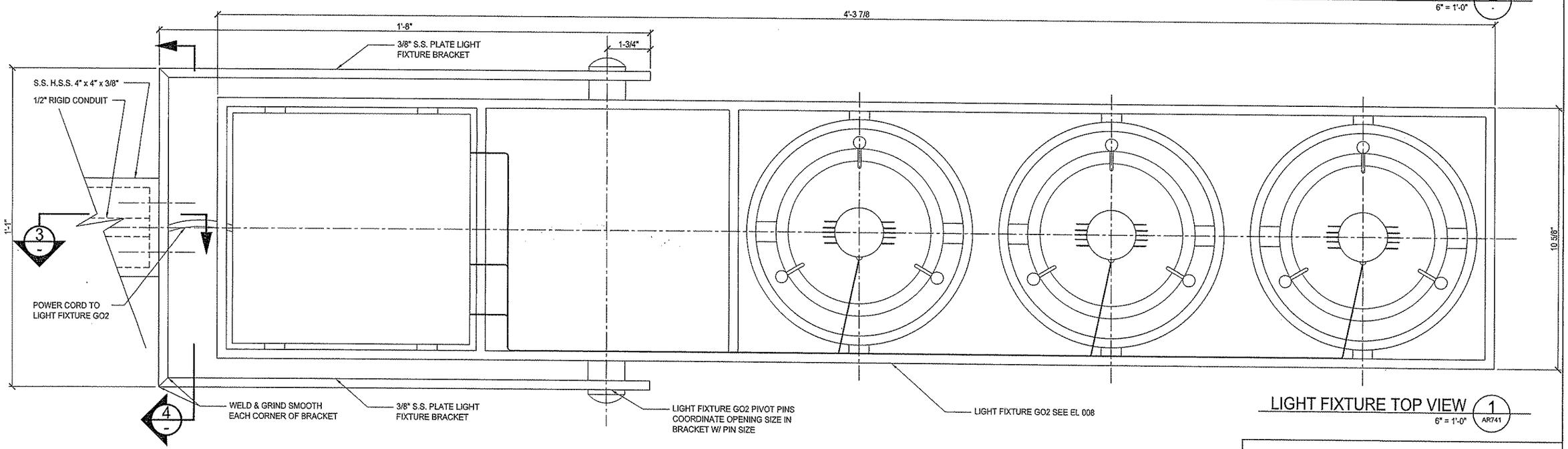

LIGHT FIXTURE TOP VIEW 1
6" = 1'-0"
AR741

The light/motion Collaborative
EDGE studio and Pfaffmann & Associates

EDGE studio
5411 Penn Avenue
Pittsburgh, PA 15206
tel: 412/345.0005
fax: 412/345.0006

Pfaffmann & Associates
323 Fourth Avenue
Pittsburgh, PA 15222
tel: 412/471.2472
fax: 412/471.2472

NO.	DATE	DESCRIPTION

REVISIONS

THE PREPARATION OF THIS DRAWING HAS BEEN FINANCED, IN PART, THROUGH A GRANT FROM THE U. S. DEPARTMENT OF TRANSPORTATION, FEDERAL TRANSIT ADMINISTRATION UNDER THE URBAN MASS TRANSPORTATION ACT OF 1964, AS AMENDED.

PA LICENSED PROFESSIONAL ENGINEER
SIGNATURE 2008

DMJM HARRIS | AECOM
FOUR GATEWAY CENTER
20TH FLOOR
PITTSBURGH, PA. 15222

APPROVED 4/29/08
DATE

DESIGNED	LMC
DRAWN	SJM
CHECKED	MGF
IN CHARGE	RSP
DATE APRIL 29, 2008	
SCALE 6"=1'-0"	

2' 1' 0 2'

PORT AUTHORITY OF ALLEGHENY COUNTY
PITTSBURGH PENNSYLVANIA

NORTH SHORE CONNECTOR
GATEWAY STATION FINISHES
FLOODLIGHT DETAILS
1 OF 1

Port Authority
connecting people to life

CONTRACT NO. NSC-010G
DWG. NO. AR745
SHT. 159

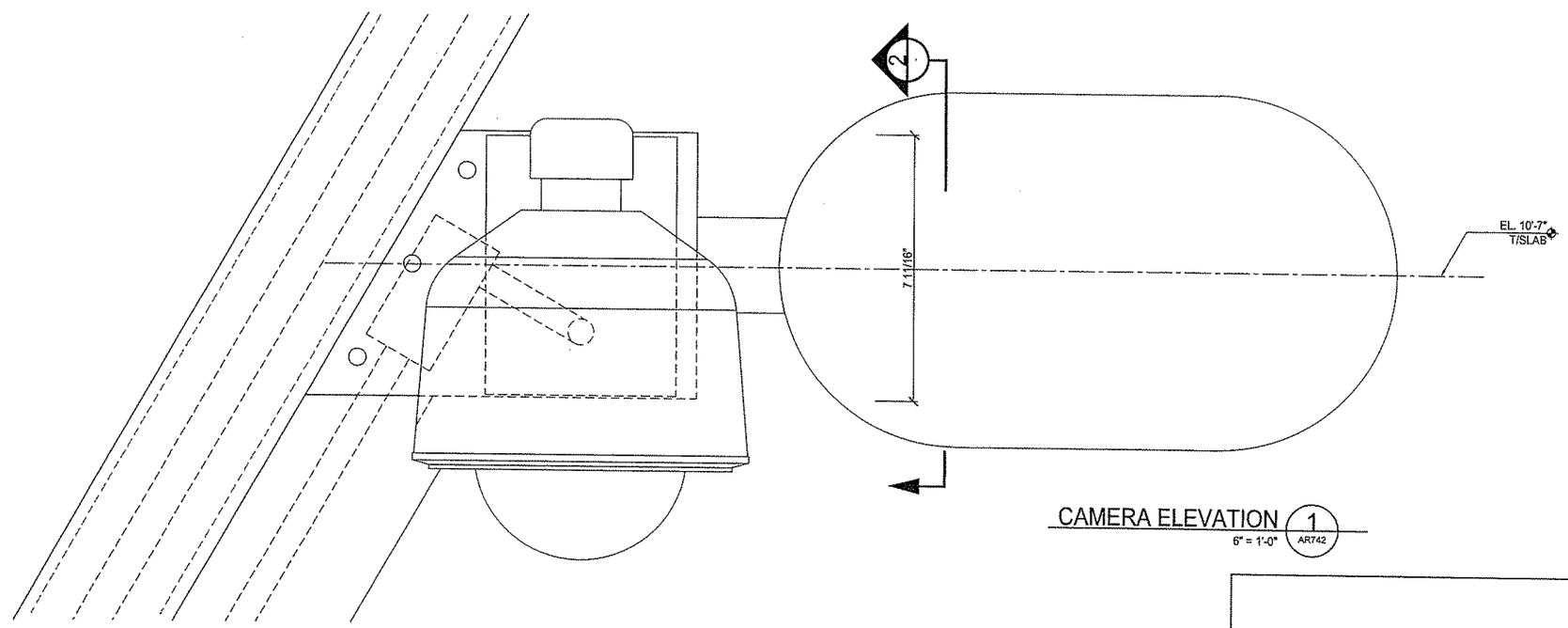

CAMERA ELEVATION 1
6" = 1'-0" AR742

The light motion Collaborative
EDGE studio and Plattmann & Associates

EDGE studio
5411 Penn Avenue
Pittsburgh, PA 15206
tel: 412.345.5005
fax: 412.345.5006

Plattmann & Associates
223 Fourth Avenue
Pittsburgh, PA 15222
tel: 412.471.2470
fax: 412.471.2472

NO.	DATE	DESCRIPTION

REVISIONS

THE PREPARATION OF THIS DRAWING HAS BEEN FINANCED, IN PART, THROUGH A GRANT FROM THE U. S. DEPARTMENT OF TRANSPORTATION, FEDERAL TRANSIT ADMINISTRATION UNDER THE URBAN MASS TRANSPORTATION ACT OF 1964, AS AMENDED.

SIGNATURE 2008

DMJM HARRIS | AECOM
FOUR GATEWAY CENTER
20TH FLOOR
PITTSBURGH, PA. 15222

APPROVED 4/29/08
DATE

DESIGNED	LMC
DRAWN	SJM
CHECKED	MGF
IN CHARGE	RSP
DATE APRIL 29, 2008	
SCALE 6"=1'-0"	

2' 1' 0 2'

PORT AUTHORITY OF ALLEGHENY COUNTY
PITTSBURGH PENNSYLVANIA

NORTH SHORE CONNECTOR
GATEWAY STATION FINISHES
CAMERA DETAILS
1 OF 1

Port Authority
connecting people to life

CONTRACT NO. NSC-010G
DWG. NO. AR746
SHT. 160

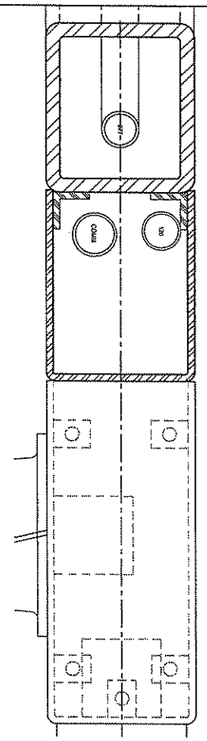

CAMERA ELEVATION 5
6" = 1'-0"

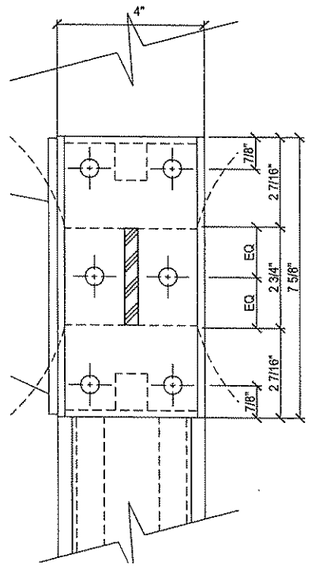

CAMERA SECTION 4
6" = 1'-0"

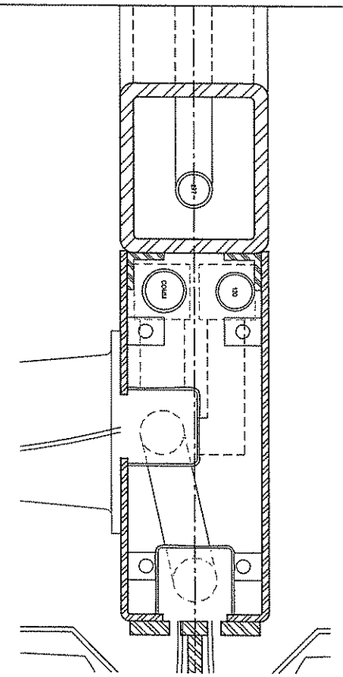

SPEAKER SECTION 3
6" = 1'-0"
AR742

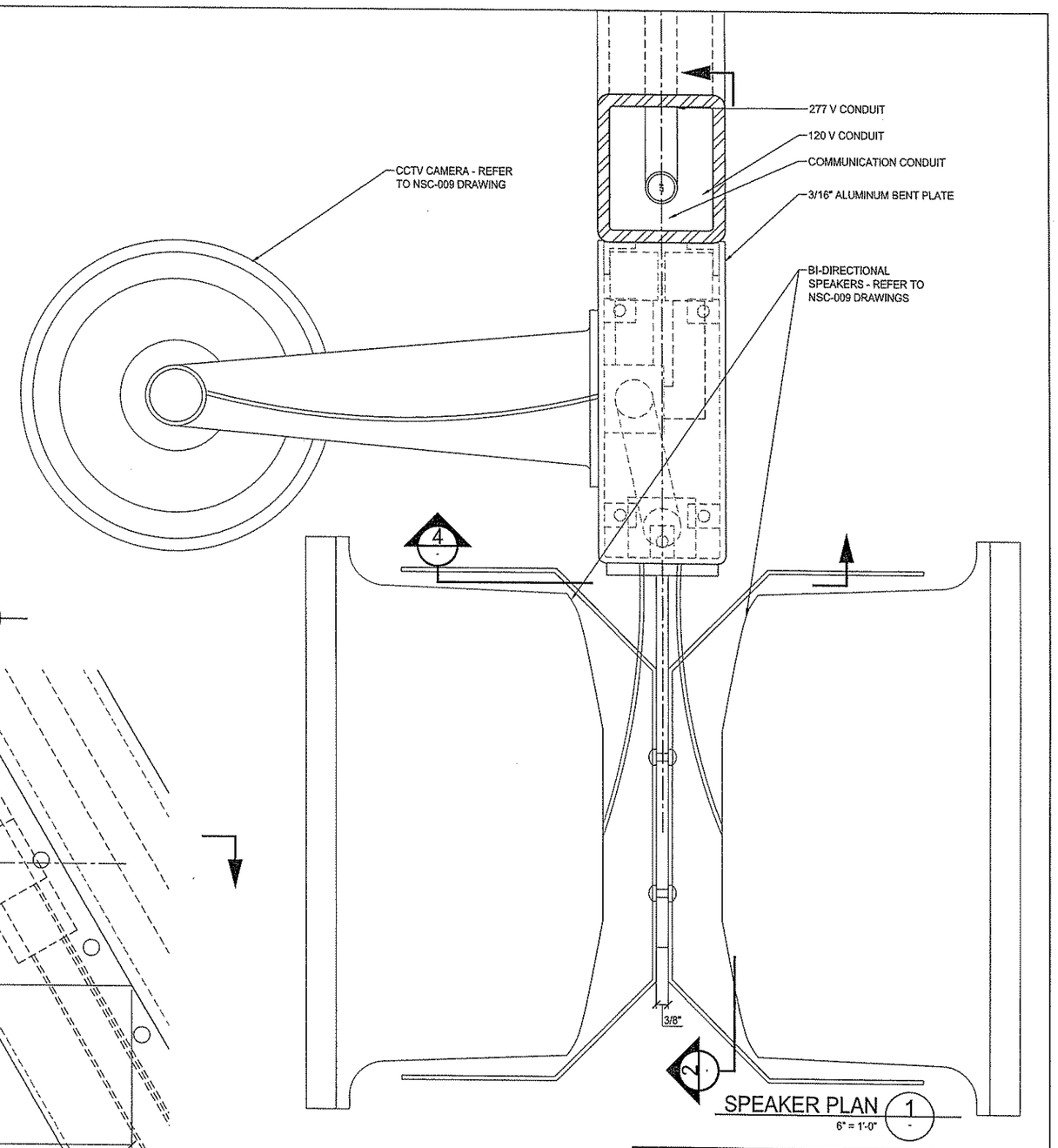

SPEAKER PLAN 1
6" = 1'-0"

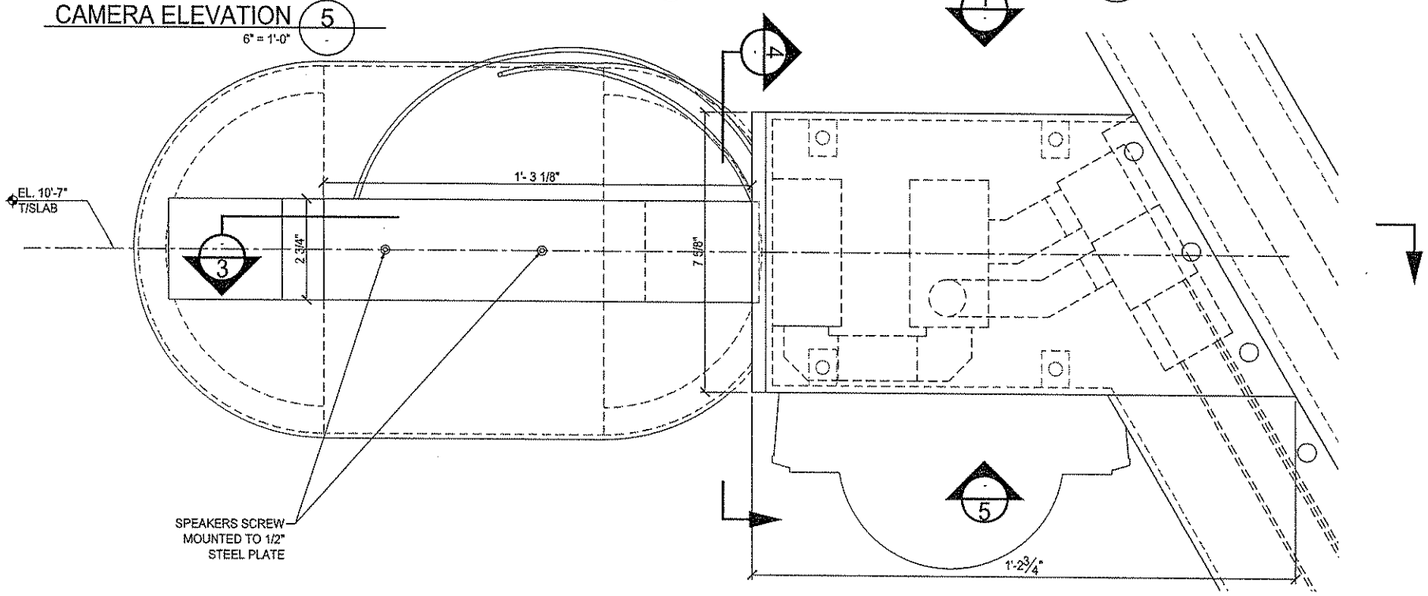

SPEAKER ELEVATION 2
6" = 1'-0"
AR742

The light motion Collaborative
EDGE studio and Pfaffmann & Associates

EDGE studio
5411 Penn Avenue
Pittsburgh, PA 15206
tel: 412/945.5005
fax: 412/945.5006

Pfaffmann & Associates
203 Fourth Avenue
Pittsburgh, PA 15222
tel: 412/471 2470
fax: 412/471 2472

NO.	DATE	DESCRIPTION

REVISIONS

THE PREPARATION OF THIS DRAWING HAS BEEN FINANCED, IN PART, THROUGH A GRANT FROM THE U. S. DEPARTMENT OF TRANSPORTATION, FEDERAL TRANSIT ADMINISTRATION UNDER THE URBAN MASS TRANSPORTATION ACT OF 1964, AS AMENDED.

PFA SIGNATURE 2008

DMJM HARRIS | AECOM
FOUR GATEWAY CENTER
20TH FLOOR
PITTSBURGH, PA. 15222

APPROVED 4/29/08
DATE

DESIGNED	LMC
DRAWN	SJM
CHECKED	MGF
IN CHARGE	RSP
DATE APRIL 29, 2008	
SCALE 6"=1'-0"	

2' 1' 0 2'

PORT AUTHORITY OF ALLEGHENY COUNTY
PITTSBURGH PENNSYLVANIA

NORTH SHORE CONNECTOR
GATEWAY STATION FINISHES
SPEAKER DETAILS
1 OF 1

Port Authority
connections made to GO

CONTRACT NO. NSC-010G
DWG. NO. AR747 SHT. 161

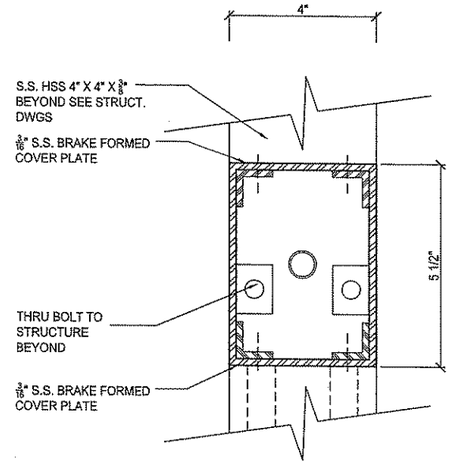

TYPICAL SECTION 7
6" = 1'-0"

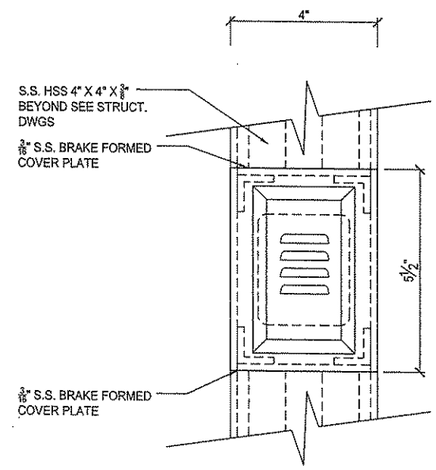

MICROPHONE ELEVATION 6
6" = 1'-0"

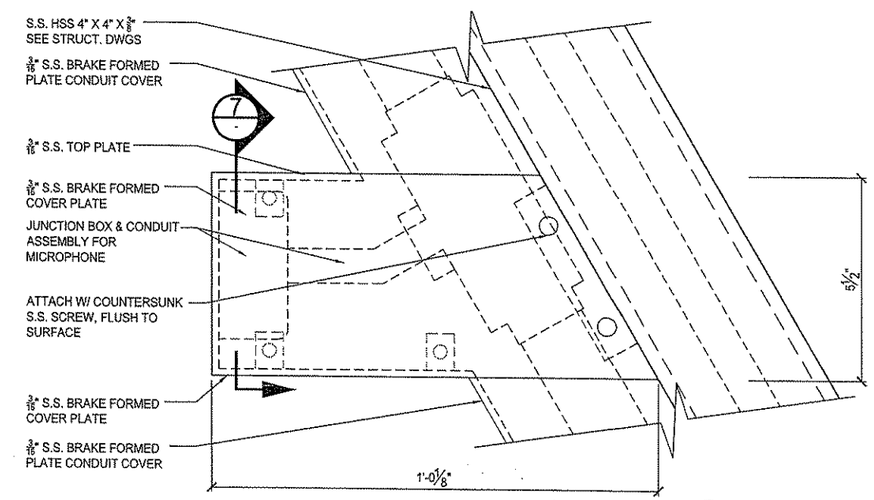

MICROPHONE ELEVATION 5
6" = 1'-0"

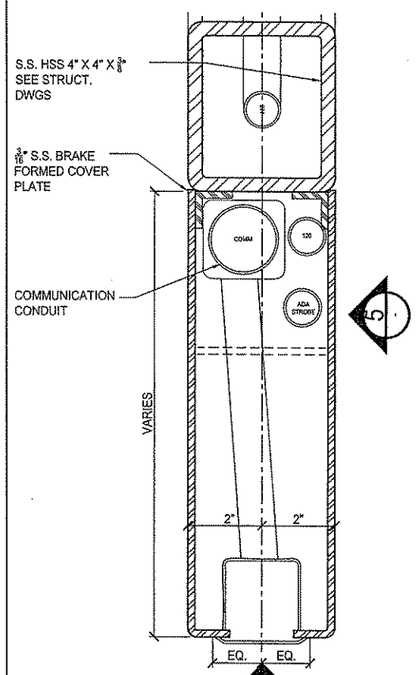

MICROPHONE SECTION 4
6" = 1'-0"

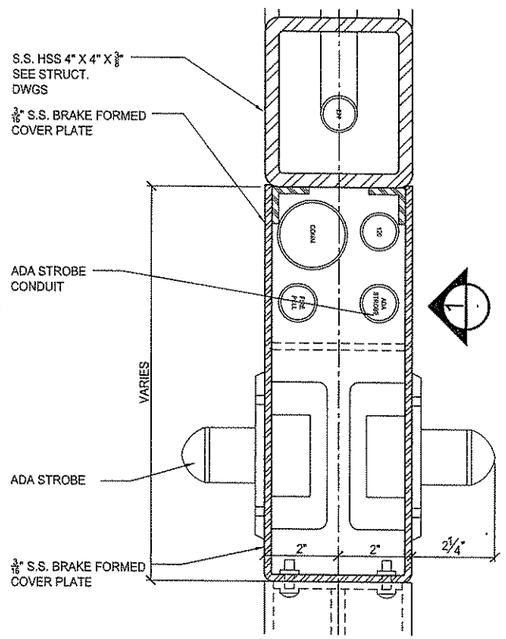

ADA STROBE SECTION 3
6" = 1'-0"

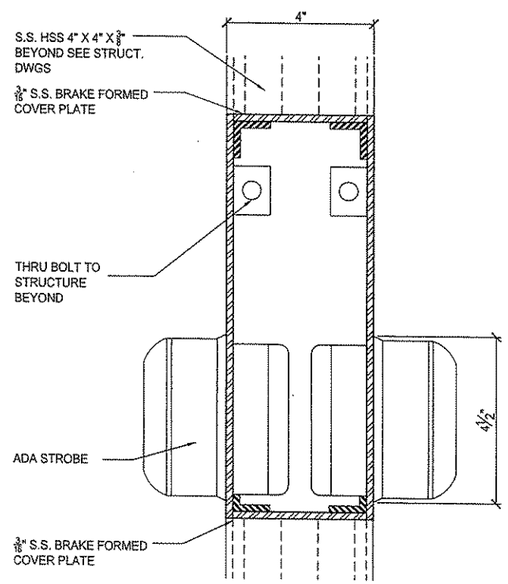

ADA STROBE SECTION 2
6" = 1'-0"

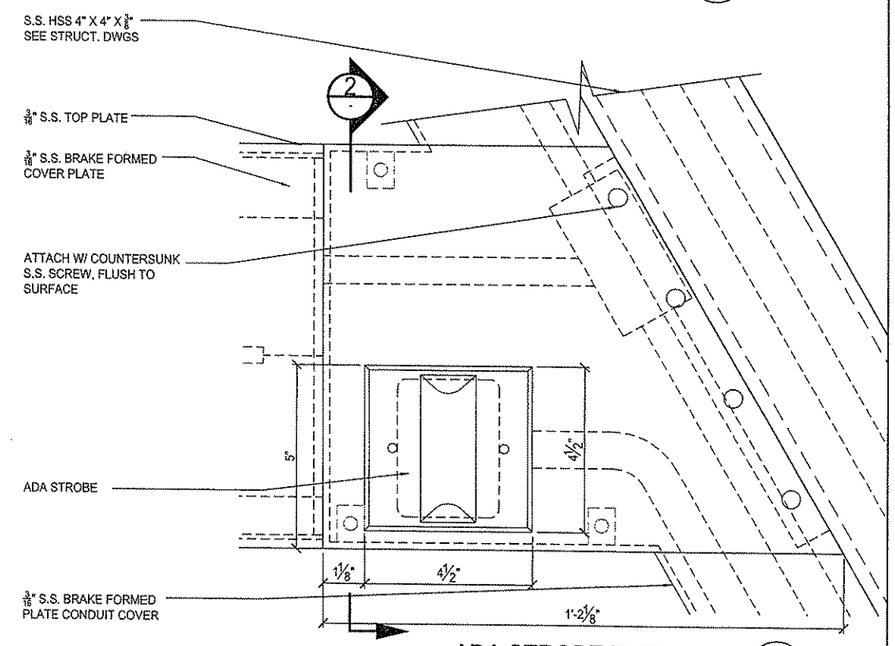

ADA STROBE ELEVATION 1
6" = 1'-0"

The light motion Collaborative
EDGE studio and Mathnson & Associates

EDGE studio
5411 Penn Avenue
Pittsburgh, PA 15206
tel: 412/345.5005
fax: 412/345.5006

Mathnson & Associates
225 Fourth Avenue
Pittsburgh, PA 15222
tel: 412/471.2470
fax: 412/471.2472

NO.	DATE	DESCRIPTION
		REVISIONS

THE PREPARATION OF THIS DRAWING HAS BEEN FINANCED, IN PART, THROUGH A GRANT FROM THE U. S. DEPARTMENT OF TRANSPORTATION, FEDERAL TRANSIT ADMINISTRATION UNDER THE URBAN MASS TRANSPORTATION ACT OF 1964, AS AMENDED.

PROFESSIONAL SEAL — SIGNATURE DATE

DMJM HARRIS | AECOM
FOUR GATEWAY CENTER
20TH FLOOR
PITTSBURGH, PA. 15222

APPROVED — DATE 4/29/08

DESIGNED	LMC
DRAWN	JMG
CHECKED	MGF
IN CHARGE	RSP
DATE	APRIL 29, 2008
SCALE	6"=1'-0"

PORT AUTHORITY OF ALLEGHENY COUNTY
PITTSBURGH PENNSYLVANIA

NORTH SHORE CONNECTOR
GATEWAY STATION FINISHES
ADA STROBE AND MICROPHONE DETAILS
1 OF 1

Port Authority
connecting people to life

CONTRACT NO. NSC-010G
DWG. NO. AR749
SHT. 163

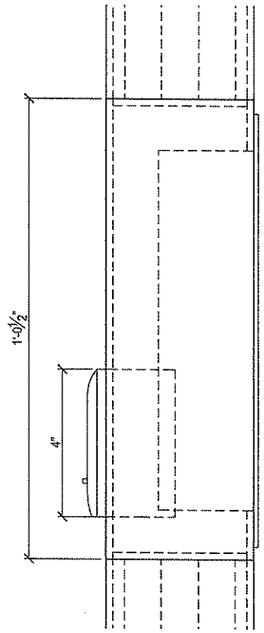

EMERGENCY PHONE ELEVATION 4 (-)
6" = 1'-0"

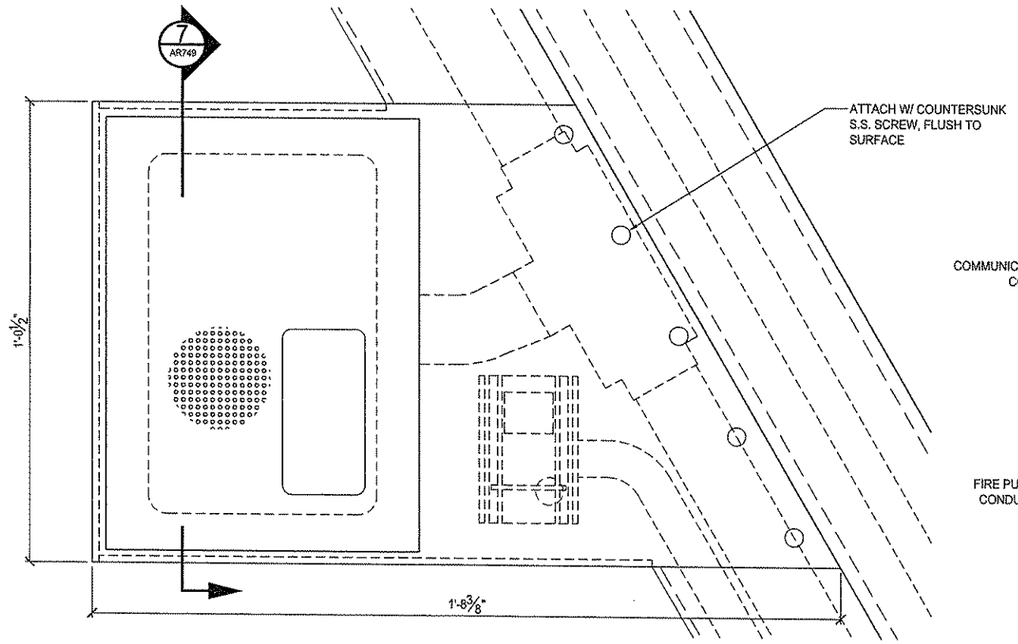

EMERGENCY PHONE ELEVATION 6 (AR742)
6" = 1'-0"

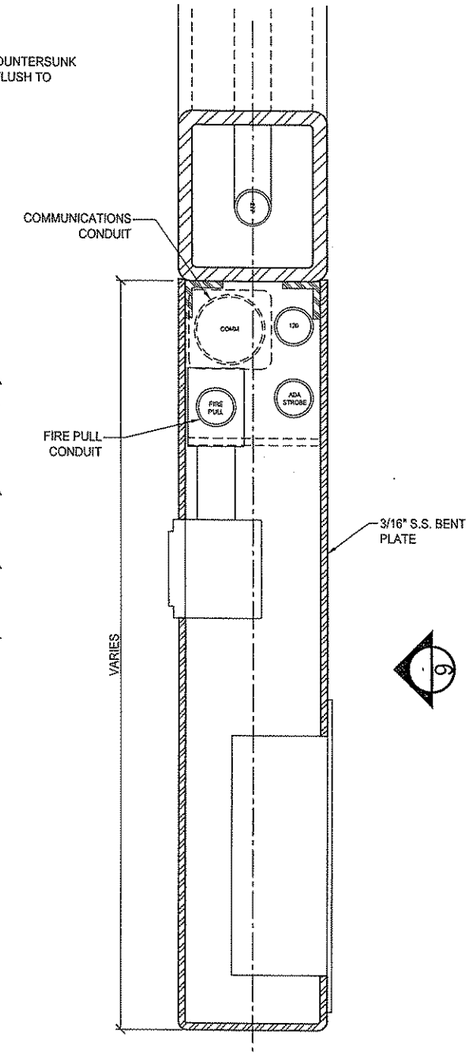

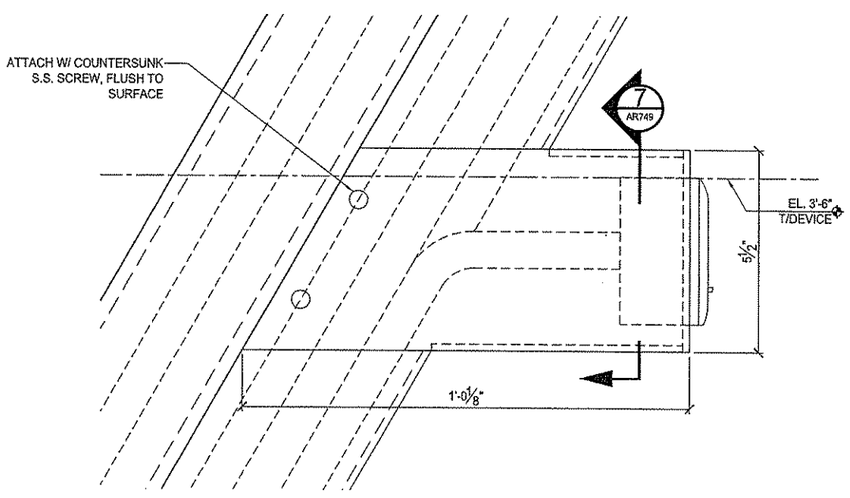

FIRE PULL ELEVATION 5 (AR742)
6" = 1'-0"

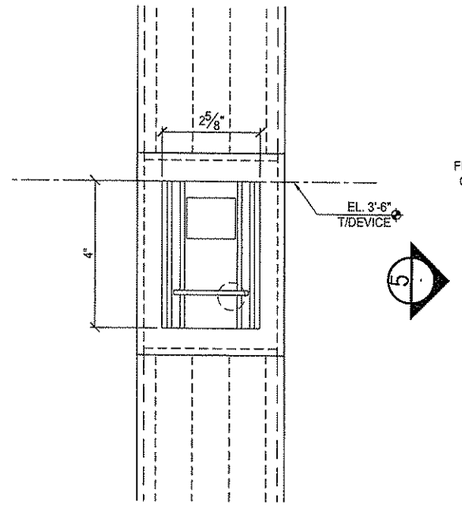

FIRE PULL ELEVATION 2 (-)
6" = 1'-0"

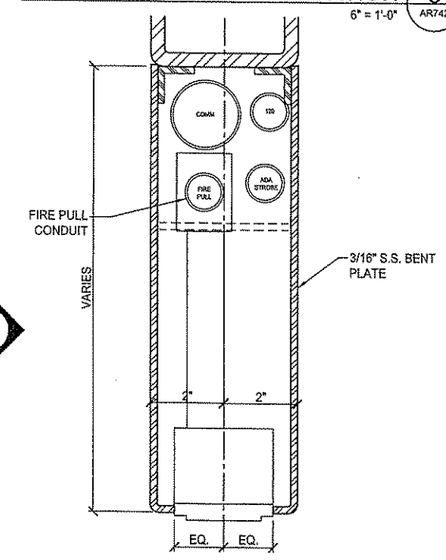

FIRE PULL PLAN 1 (-)
6" = 1'-0"

EMERGENCY PHONE PLAN 3 (-)
6" = 1'-0"

The light / motion Collaborative
EDGE studio and Pfaffmann & Associates

EDGE studio
5411 Penn Avenue
Pittsburgh, PA 15206
tel. 412.945.5005
fax. 412.945.5006

Pfaffmann & Associates
223 Fourth Avenue
Pittsburgh, PA 15222
tel. 412.471.2472
fax. 412.471.2472

NO.	DATE	DESCRIPTION

REVISIONS

THE PREPARATION OF THIS DRAWING HAS BEEN FINANCED, IN PART, THROUGH A GRANT FROM THE U. S. DEPARTMENT OF TRANSPORTATION, FEDERAL TRANSIT ADMINISTRATION UNDER THE URBAN MASS TRANSPORTATION ACT OF 1964, AS AMENDED.

REGISTERED ARCHITECT
PENNSYLVANIA
RICHARD S. PFAFFMANN
SIGNATURE 2008

DMJM HARRIS | AECOM
FOUR GATEWAY CENTER
20TH FLOOR
PITTSBURGH, PA. 15222

David S. Pfaffmann 4/29/08
APPROVED DATE

DESIGNED	LMC
DRAWN	SJM
CHECKED	MGF
IN CHARGE	RSP
DATE APRIL 29, 2008	
SCALE 6"=1'-0"	

PORT AUTHORITY OF ALLEGHENY COUNTY
PITTSBURGH PENNSYLVANIA

NORTH SHORE CONNECTOR
GATEWAY STATION FINISHES
FIRE ALARM DETAILS
1 OF 1

Port Authority
connecting people to life

CONTRACT NO. NSC-010G
DWG. NO. AR750 SHT. 164

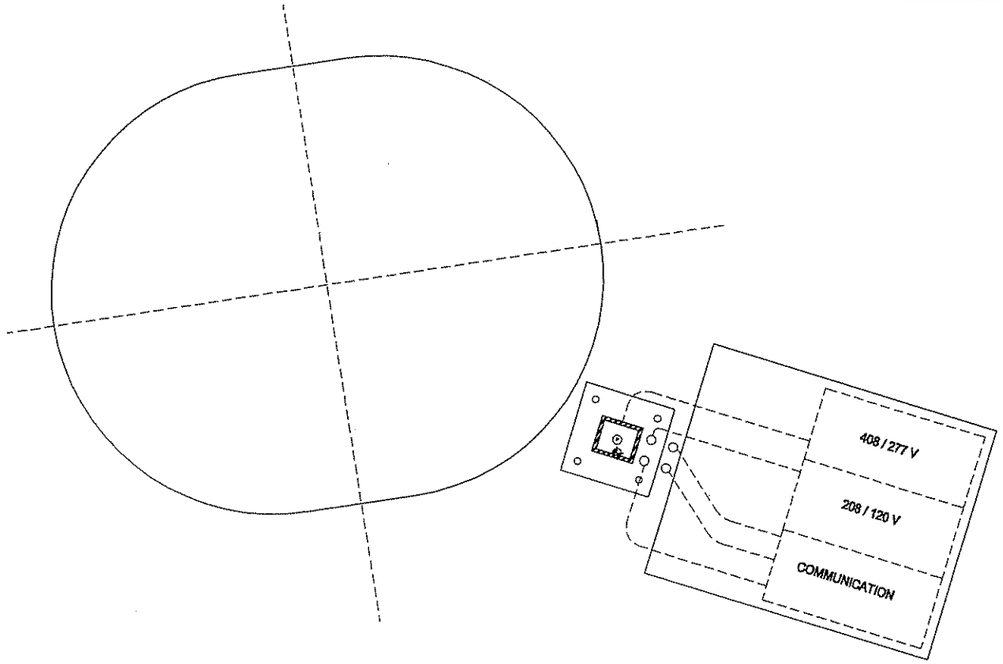

LIGHTPOST 1, 3 + 5 PLAN (4 / AR740)
1/2"=1'-0" 1/2" = 1'-0"

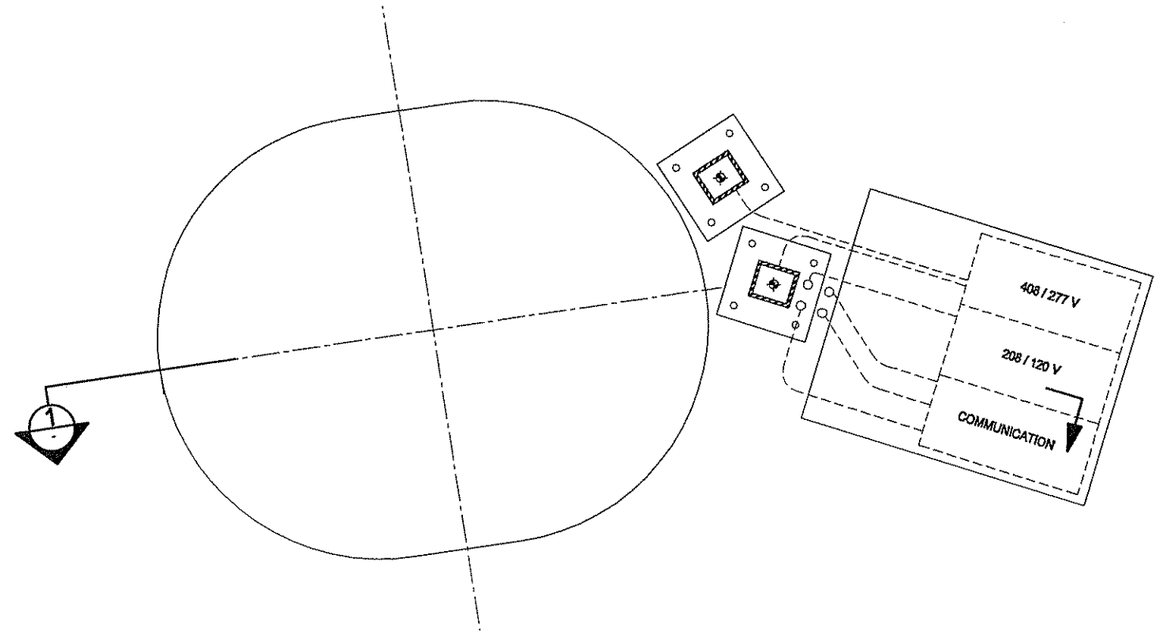

LIGHTPOST 2 + 4 PLAN (2 / AR740)
1/2"=1'-0" 1/2" = 1'-0"

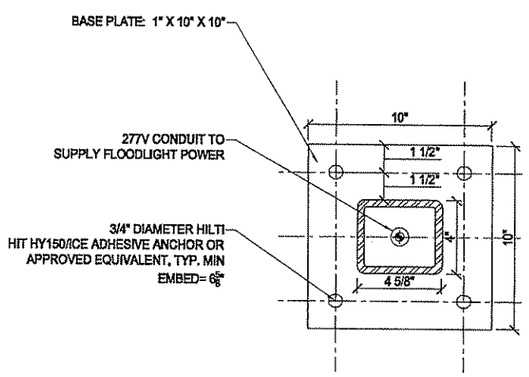

EMBED PLATE PLAN (3 / -)
3"=1'-0" 3" = 1'-0"

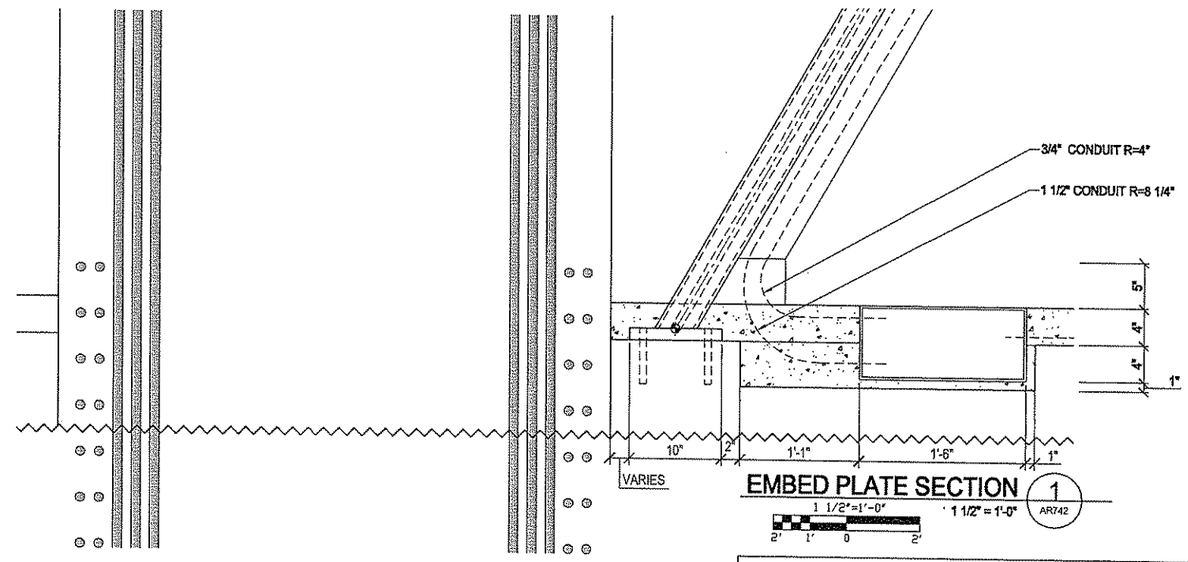

EMBED PLATE SECTION (1 / AR742)
1 1/2"=1'-0" 1 1/2" = 1'-0"

The light Emotion Collaborative
EDGE studio and Pfeifmann & Associates

EDGE studio
5415 Penn Avenue
Pittsburgh, PA 15206
tel. 412/345.0005
fax. 412/345.0006

Pfeifmann & Associates
223 Fourth Avenue
Pittsburgh, PA 15222
tel. 412/471-2470
fax. 412/471-2472

NO.	DATE	DESCRIPTION

REVISIONS

THE PREPARATION OF THIS DRAWING HAS BEEN FINANCED, IN PART, THROUGH A GRANT FROM THE U. S. DEPARTMENT OF TRANSPORTATION, FEDERAL TRANSIT ADMINISTRATION UNDER THE URBAN MASS TRANSPORTATION ACT OF 1964, AS AMENDED.

PENNSYLVANIA REGISTERED PROFESSIONAL ENGINEER
PATRICK J. HARRIS
SIGNATURE

DMJM HARRIS | AECOM
FOUR GATEWAY CENTER
20TH FLOOR
PITTSBURGH, PA. 15222

APPROVED 4/29/08
DATE

DESIGNED	LMC
DRAWN	SJM
CHECKED	MGF
IN CHARGE	RSP
DATE APRIL 29, 2008	
SCALE	VARIES

PORT AUTHORITY OF ALLEGHENY COUNTY
PITTSBURGH PENNSYLVANIA

NORTH SHORE CONNECTOR
GATEWAY STATION FINISHES
EMBED PLATE DETAILS
1 OF 1

Port Authority
connecting people to life

CONTRACT NO. NSC-010G
DWG. NO. AR751 SHT. 165

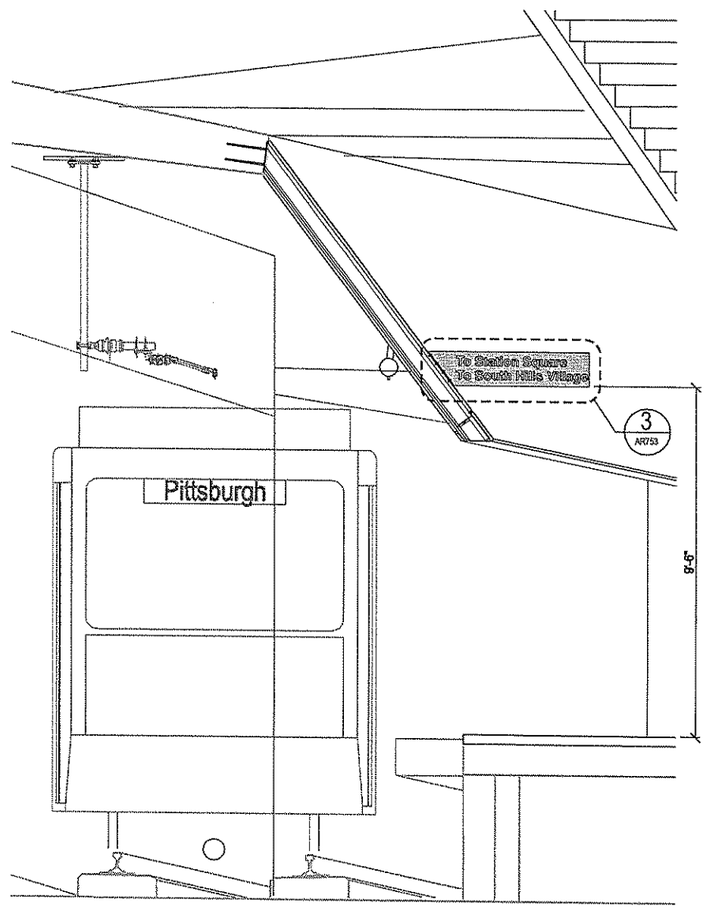

DOWNSTAND SIGN ELEVATION 2
1/2" = 1'-0"

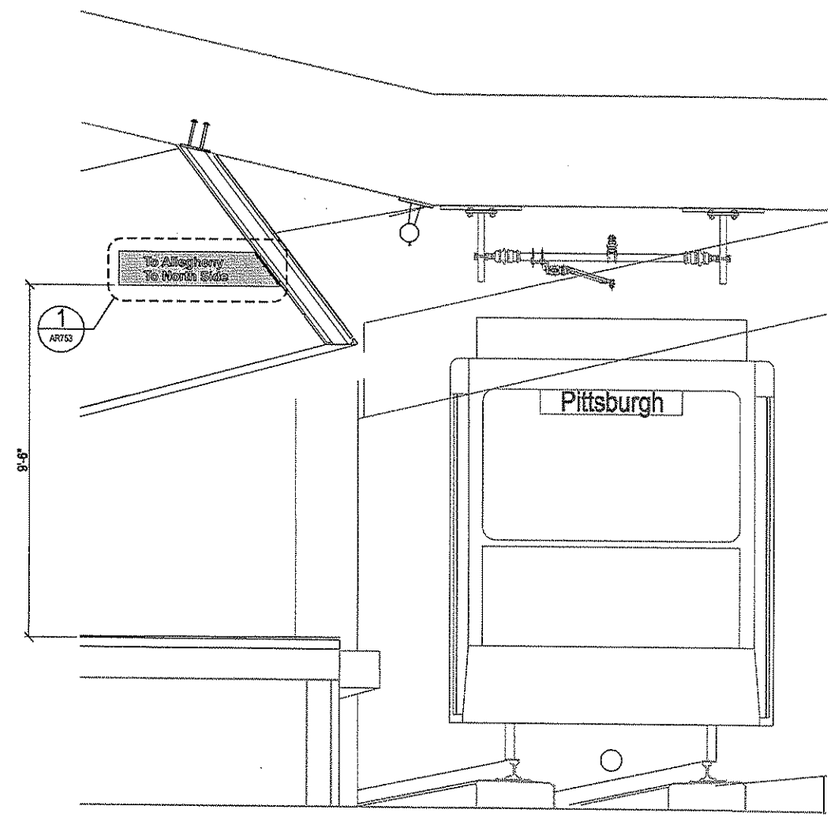

DOWNSTAND SIGN ELEVATION 1
1/2" = 1'-0"

The light *in motion* Collaborative
EDGE studio and Pfaffmann & Associates

EDGE studio
5411 Penn Avenue
Pittsburgh, PA 15206
tel: 412/345 5005
fax: 412/345 5006

Pfaffmann & Associates
203 Fourth Avenue
Pittsburgh, PA 15222
tel: 412/471 2470
fax: 412/471 2472

NO.	DATE	DESCRIPTION

REVISIONS

THE PREPARATION OF THIS DRAWING HAS BEEN FINANCED, IN PART, THROUGH A GRANT FROM THE U. S. DEPARTMENT OF TRANSPORTATION, FEDERAL TRANSIT ADMINISTRATION UNDER THE URBAN MASS TRANSPORTATION ACT OF 1964, AS AMENDED.

APRIL 29, 2008

DMJM HARRIS | AECOM
FOUR GATEWAY CENTER
20TH FLOOR
PITTSBURGH, PA. 15222

APPROVED DATE 4/29/08

DESIGNED	LMC
DRAWN	SJM
CHECKED	MGF
IN CHARGE	RSP
DATE APRIL 29, 2008	
SCALE 1/2"=1'-0"	
2' 1' 0 2	

PORT AUTHORITY OF ALLEGHENY COUNTY
PITTSBURGH PENNSYLVANIA

NORTH SHORE CONNECTOR
GATEWAY STATION FINISHES
DOWNSTAND SIGNAGE DETAILS
1 OF 2

Port Authority
connecting people to life

CONTRACT NO. NSC-010G
DWG. NO. AR752 SHT. 166

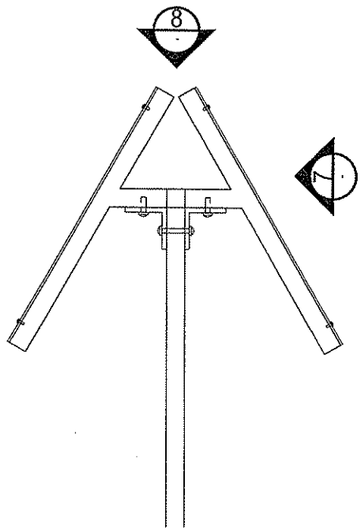

POST SIGN ELEVATION 9 (AR502)
6" = 1'-0"

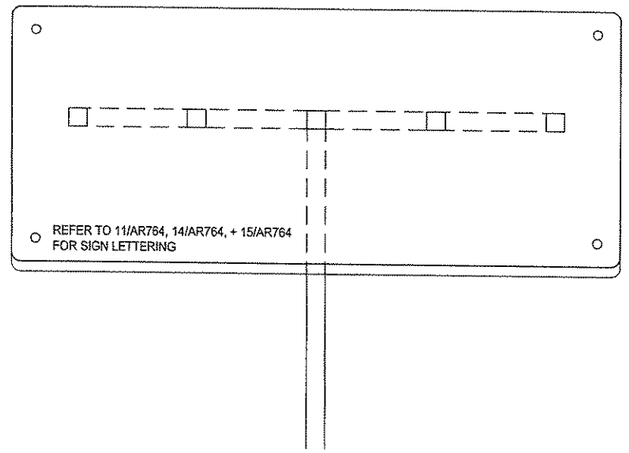

POST SIGN ELEVATION 7
6" = 1'-0"

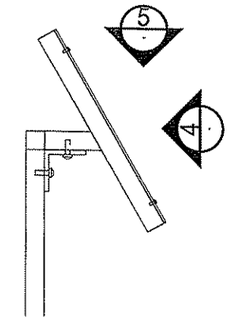

POST SIGN ELEVATION 6
6" = 1'-0"

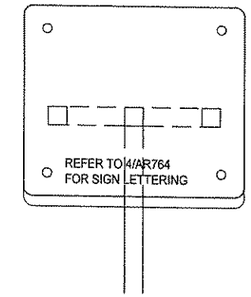

POST SIGN ELEVATION 4 (AR510)
6" = 1'-0"

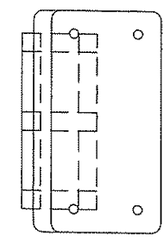

POST SIGN PLAN 5
6" = 1'-0"

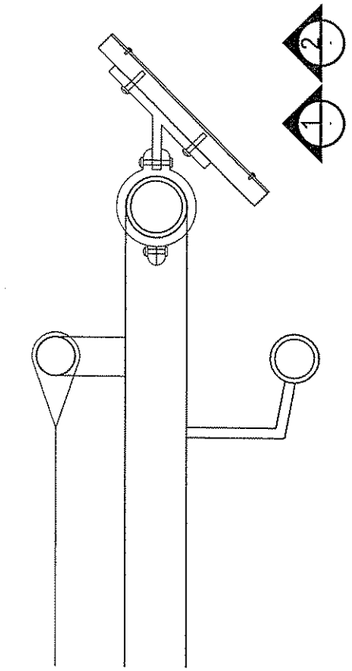

RAILING SIGN ELEVATION 3
6" = 1'-0"

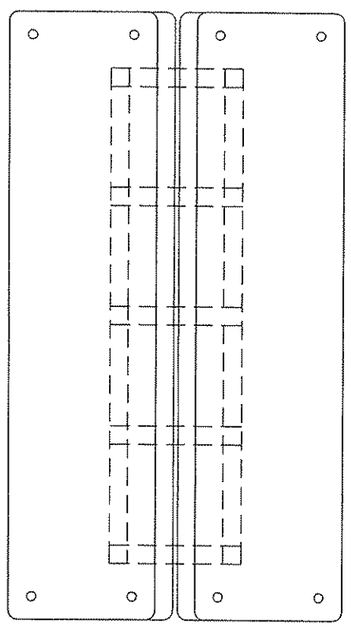

POST SIGN PLAN 8 (AR501)
6" = 1'-0"

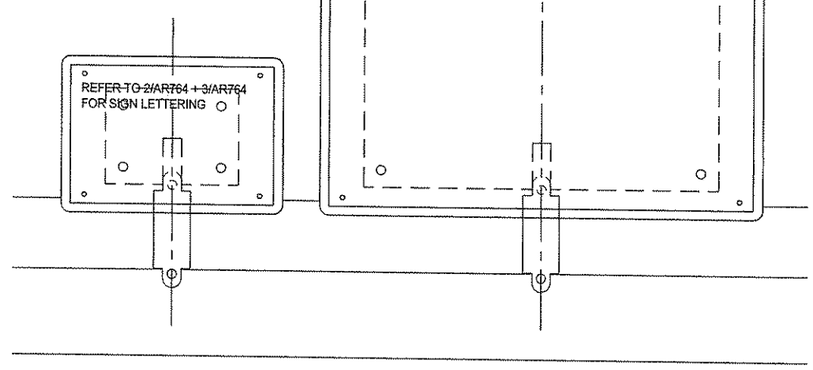

RAILING SIGN ELEVATION 2 (AR722)
6" = 1'-0"

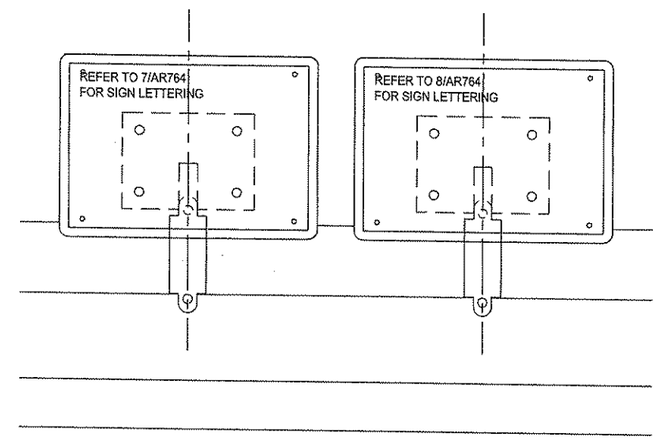

RAILING SIGN ELEVATION 1 (AR722)
6" = 1'-0"

The light / motion Collaborative
EDGE studio and Pfafmann & Associates

EDGE studio
5413 Penn Avenue
Pittsburgh, PA 15206
tel: 412/343.9005
fax: 412/343.9006

Pfafmann & Associates
223 Fourth Avenue
Pittsburgh, PA 15222
tel: 412/471.2470
fax: 412/471.3072

NO.	DATE	DESCRIPTION

REVISIONS

THE PREPARATION OF THIS DRAWING HAS BEEN FINANCED, IN PART, THROUGH A GRANT FROM THE U. S. DEPARTMENT OF TRANSPORTATION, FEDERAL TRANSIT ADMINISTRATION UNDER THE URBAN MASS TRANSPORTATION ACT OF 1964, AS AMENDED.

PROFESSIONAL SEAL

DMJM HARRIS | AECOM
FOUR GATEWAY CENTER
20TH FLOOR
PITTSBURGH, PA. 15222

APPROVED — DATE 4/29/08

DESIGNED	LMC
DRAWN	SJM
CHECKED	MGF
IN CHARGE	RSP
DATE	APRIL 29, 2008
SCALE	6"=1'-0"

2' 1' 0 2'

PORT AUTHORITY OF ALLEGHENY COUNTY
PITTSBURGH PENNSYLVANIA

NORTH SHORE CONNECTOR
GATEWAY STATION FINISHES
POST & RAILING SIGNAGE DETAILS
1 OF 1

Port Authority
connecting people to life

CONTRACT NO. NSC-010G
DWG. NO. AR754 SHT. 168

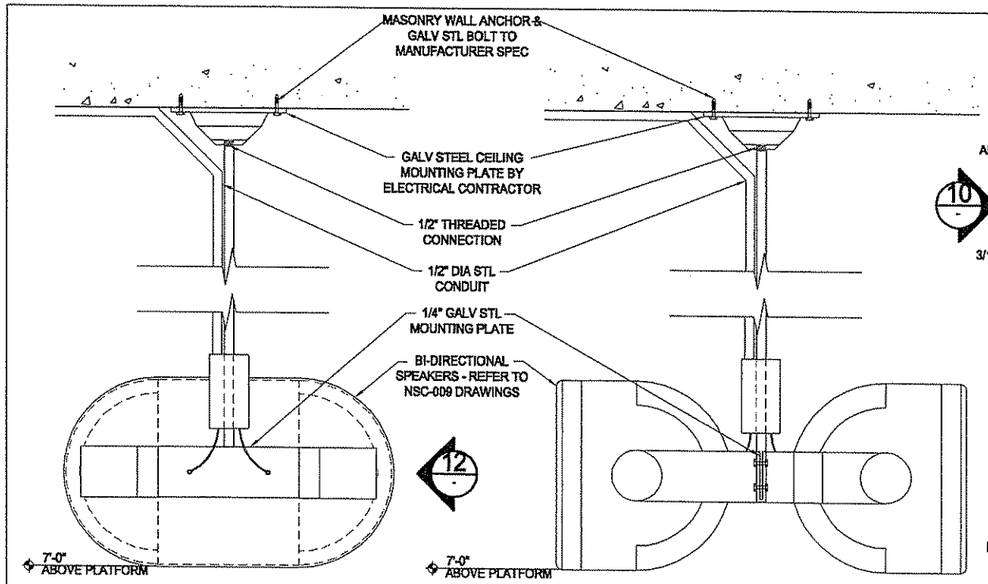

SPEAKER SECTION 13
3"=1'-0" 3" = 1'-0"

SPEAKER ELEVATION 12 AR758
3"=1'-0" 3" = 1'-0"

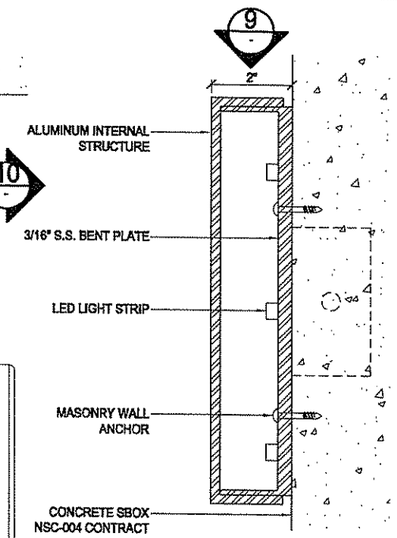

SIGN SECTION 11
6"=1'-0" 6" = 1'-0"

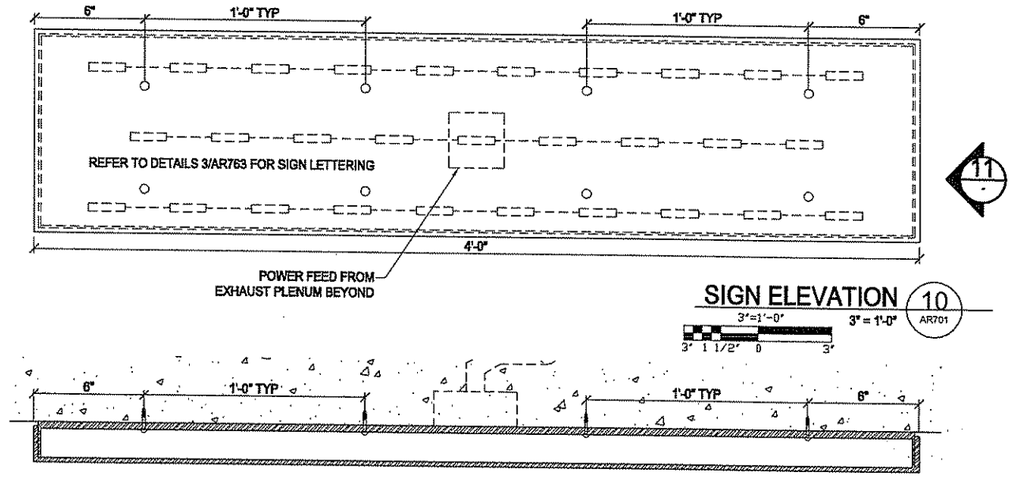

SIGN ELEVATION 10 AR701
3"=1'-0" 3" = 1'-0"

SIGN PLAN 9
3"=1'-0" 3" = 1'-0"

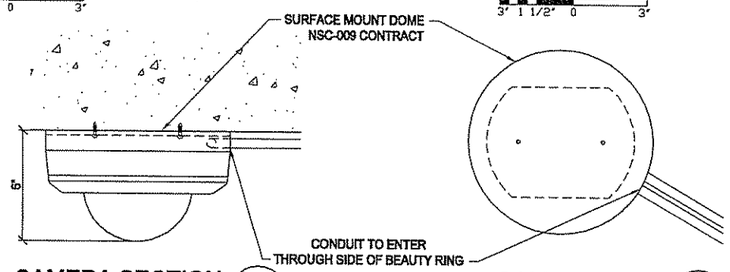

CAMERA SECTION 8 AR204
3"=1'-0" 3" = 1'-0"

CAMERA PLAN 7 AR758
3"=1'-0" 3" = 1'-0"

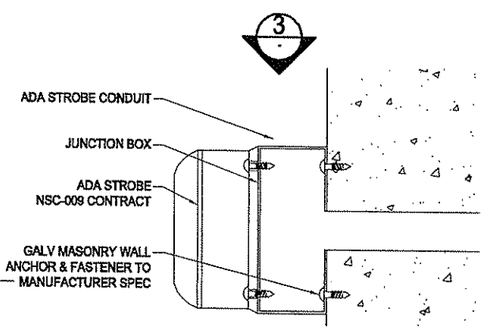

ADA STROBE SECTION 4
6"=1'-0" 6" = 1'-0"

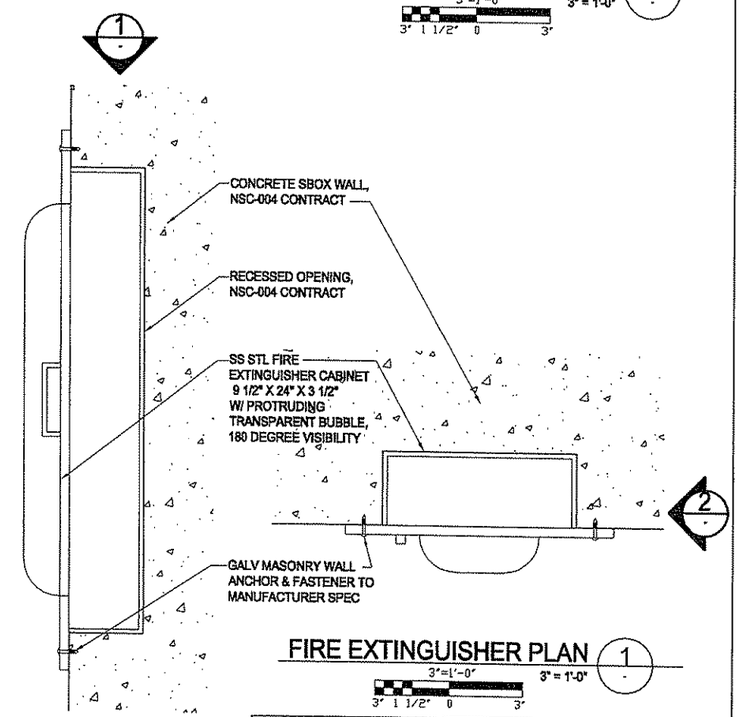

FIRE EXTINGUISHER PLAN 1
3"=1'-0" 3" = 1'-0"

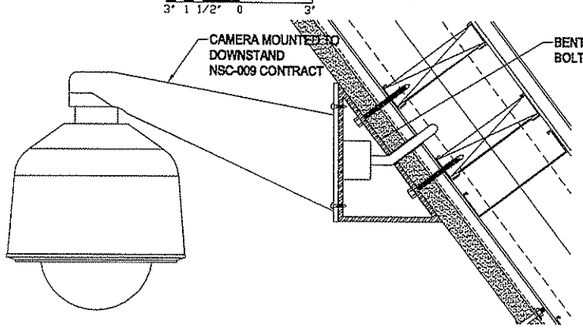

CAMERA SECTION 6 AR758/AR202
3"=1'-0" 3" = 1'-0"

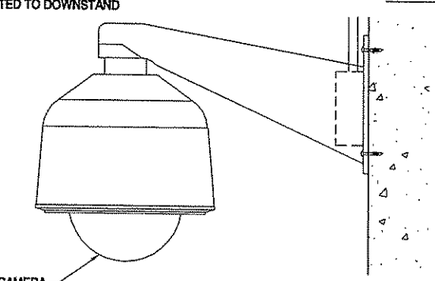

CAMERA SECTION 5 AR758/AR202
3"=1'-0" 3" = 1'-0"

ADA STROBE PLAN 3 AR758
6"=1'-0" 6" = 1'-0"

FIRE EXTINGUISHER SECTION 2
3"=1'-0" 3" = 1'-0"

The light motion Collaborative
EDGE studio and Pfaffmann & Associates

EDGE studio
5411 Penn Avenue
Pittsburgh, PA 15206
tel 412/243.5002
fax 412/243.5006

Pfaffmann & Associates
222 Fourth Avenue
Pittsburgh, PA 15222
tel 412/471.2470
fax 412/471.2472

NO.	DATE	DESCRIPTION

REVISIONS

THE PREPARATION OF THIS DRAWING HAS BEEN FINANCED, IN PART, THROUGH A GRANT FROM THE U. S. DEPARTMENT OF TRANSPORTATION, FEDERAL TRANSIT ADMINISTRATION UNDER THE URBAN MASS TRANSPORTATION ACT OF 1964, AS AMENDED.

APRIL 29, 2008

DMJM HARRIS | AECOM
FOUR GATEWAY CENTER
20TH FLOOR
PITTSBURGH, PA. 15222

David P. Hung 4/29/08
APPROVED DATE

DESIGNED	LMC
DRAWN	SJM
CHECKED	MGF
IN CHARGE	RSP
DATE APRIL 29, 2008	
SCALE	VARIES

PORT AUTHORITY OF ALLEGHENY COUNTY
PITTSBURGH PENNSYLVANIA

NORTH SHORE CONNECTOR
GATEWAY STATION FINISHES
DEVICE MOUNTING DETAILS
1 OF 3

Port Authority
connecting people to life

CONTRACT NO. NSC-010G
DWG. NO. AR756 SHT. 170

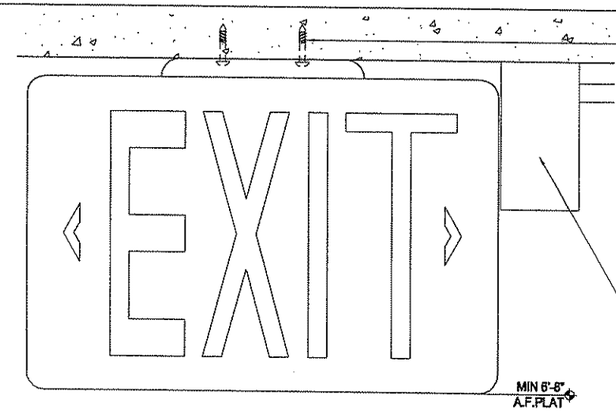

EXIT SIGN ELEVATION 7 -
6"=1'-0" 6" = 1'-0"

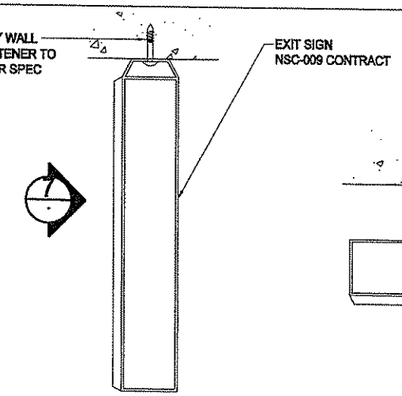

EXIT SIGN SECTION 6 - AR758
6"=1'-0" 6" = 1'-0"

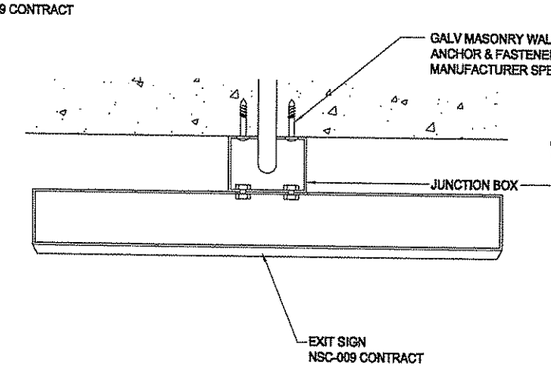

EXIT SIGN PLAN 5 - AR758
6"=1'-0" 6" = 1'-0"

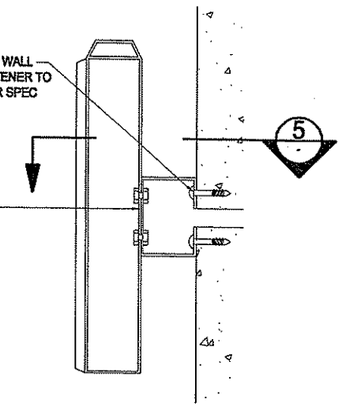

EXIT SIGN SECTION 4 -
6"=1'-0" 6" = 1'-0"

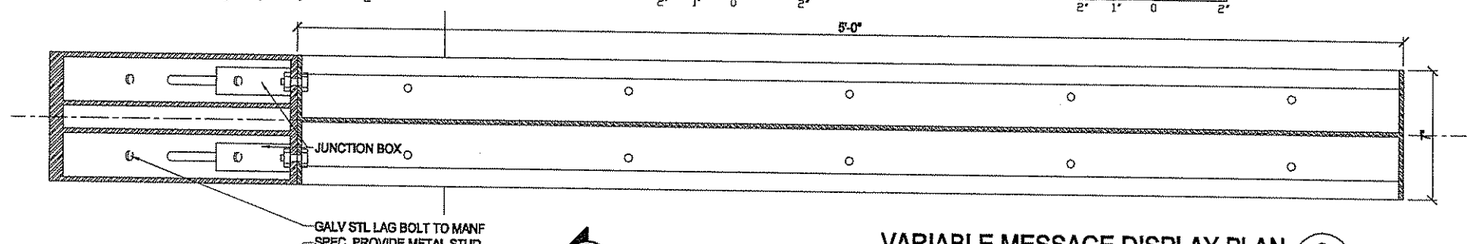

VARIABLE MESSAGE DISPLAY PLAN 3 - AR758
3"=1'-0" 3" = 1'-0"

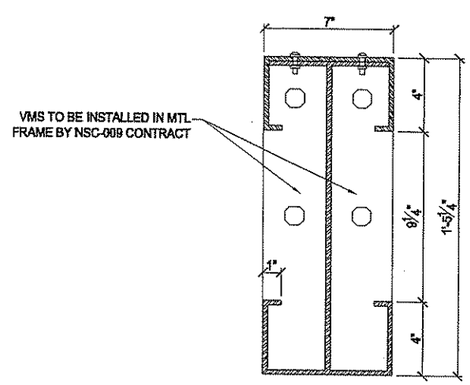

VARIABLE MESSAGE DISPLAY SECTION 2 -
3"=1'-0" 3" = 1'-0"

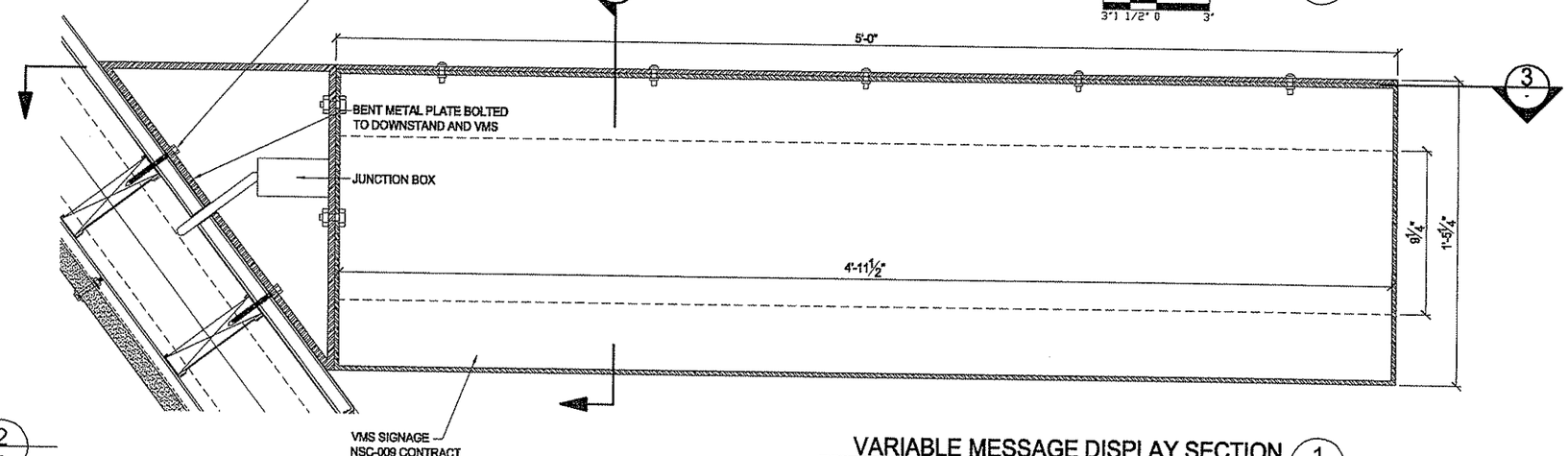

VARIABLE MESSAGE DISPLAY SECTION 1 -
3"=1'-0" 3" = 1'-0"

The light *motion* Collaborative
EDGE studio and Pfaffmann & Associates

EDGE studio
5411 Penn Avenue
Pittsburgh, PA 15206
tel 412.345.5005
fax 412.345.5006

Pfaffmann & Associates
223 Fourth Avenue
Pittsburgh, PA 15222
tel 412.471.2470
fax 412.471.2472

NO.	DATE	DESCRIPTION

REVISIONS

THE PREPARATION OF THIS DRAWING HAS BEEN FINANCED, IN PART, THROUGH A GRANT FROM THE U. S. DEPARTMENT OF TRANSPORTATION, FEDERAL TRANSIT ADMINISTRATION UNDER THE URBAN MASS TRANSPORTATION ACT OF 1964, AS AMENDED.

PROFESSIONAL ENGINEER COMMONWEALTH OF PENNSYLVANIA
REGISTERED PROFESSIONAL ENGINEER
PENNSYLVANIA
SIGNATURE

DMJM HARRIS | AECOM
FOUR GATEWAY CENTER
20TH FLOOR
PITTSBURGH, PA. 15222

APPROVED 4/29/08 DATE

DESIGNED	LMC
DRAWN	SJM
CHECKED	MGF
IN CHARGE	RSP
DATE APRIL 29, 2008	
SCALE	VARIES

PORT AUTHORITY OF ALLEGHENY COUNTY
PITTSBURGH PENNSYLVANIA

NORTH SHORE CONNECTOR
GATEWAY STATION FINISHES
DEVICE MOUNTING DETAILS
2 OF 3

Port Authority
connecting people to life

CONTRACT NO. NSC-010G
DWG. NO. AR757 SHT. 171

VISUAL SIGNAGE SCHEDULE

#		SIGN TYPE	MESSAGE	ILLUMINATED	SHEET	MOUNTING*
1	A	STATION IDENTIFIER	GATEWAY	•	3/AR763	A,D
2	B1	DESTINATION/DIRECTIONAL	EXIT TO STREET	•	1/AR763	D
3	B2	DESTINATION/DIRECTIONAL	TO SOUTH HILLS VILLAGE - STATION SQUARE TO ALLEGHENY - NORTH SIDE	•	2/AR763	D
4	B3	DESTINATION/DIRECTIONAL	TO ALLEGHENY TO NORTH SIDE	•	4/AR763	C
5	B4	DESTINATION/DIRECTIONAL	TO STATION SQUARE TO SOUTH HILLS VILLAGE	•	5/AR763	C
6	B5	DESTINATION/DIRECTIONAL	PENN AVENUE	•	6/AR763	E
7	B6	DESTINATION/DIRECTIONAL	LIBERTY AVENUE	•	7/AR763	E
8	C1	SYSTEM MAP			10/AR763	A
9	C2	FIXED GUIDEWAY MAP			9/AR763	A
12	F1	ENTRANCE SIGN	WELCOME TO GATEWAY STATION		8/AR763	-
13	G	VARIABLE MESSAGE DISPLAYS		•	13/AR763	C
14	F2	ENTRANCE SIGN	"T" LOGO		11/AR763	E
15	F3	ENTRANCE SIGN	PAAC LOGO		12/AR763	A

REFER TO AR761 + AR762 FOR SIGN LOCATIONS

TACTILE SIGNAGE SCHEDULE

#		SIGN TYPE	MESSAGE	ILLUMINATED	SHEET	MOUNTING*
1	E1	PEDESTRIAN WARNINGS	DO NOT ENTER		1/AR764	A
2	E2	DESTINATION/DIRECTIONAL	ESCALATOR		2/AR764	F
3	E3	DESTINATION/DIRECTIONAL	STAIR		3/AR764	F
4	E4	DESTINATION/DIRECTIONAL	ELEVATOR		4/AR764	A
5	E5	STATION IDENTIFIER	GATEWAY		5/AR764	A
6	E6	PEDESTRIAN WARNINGS	AUTHORIZED PERSONNEL ONLY		6/AR764	A
7	E7	DESTINATION/DIRECTIONAL	TO PENN AVENUE		7/AR764	F
8	E8	DESTINATION/DIRECTIONAL	TO LIBERTY AVENUE		8/AR764	F
9	E9	PEDESTRIAN WARNINGS	EMERGENCY EXIT ONLY		9/AR764	A
10	E10	ENTRANCE SIGN	WELCOME TO GATEWAY STATION		10/AR764	A
11	E11	DESTINATION/DIRECTIONAL	GATEWAY - ESCALATOR - EXIT TO STREET		11/AR764	G
12	E12	PATRON COURTESY	NO SMOKING, EATING, DRINKING NO RADIO WITHOUT EARPHONES		12/AR764	F
13	E13	PEDESTRIAN WARNINGS	NO PEDESTRIANS BEYOND THIS POINT		13/AR764	A
14	E14	DESTINATION/DIRECTIONAL	TO SOUTH HILLS VILLAGE - STATION SQUARE TO ALLEGHENY - NORTH SIDE		14/AR764	G
15	E15	DESTINATION/DIRECTIONAL	GATEWAY - STAIR - EXIT TO STREET		15/AR764	G
16	E16	ROOM NUMBER	ROOM NUMBER - ROOM DESCRIPTION		16/AR764	A

REFER TO AR761 + AR762 FOR SIGN LOCATIONS

*MOUNTING TYPES:

A WALL
B CEILING
C DOWNSTAND
D LIGHTPOST
E PENDANT
F RAILING
G FLOOR POST

The light/motion Collaborative
EDGE studio and Pfaffmann & Associates

EDGE studio
5411 Penn Avenue
Pittsburgh, PA 15206
tel: 412/945.5005
fax: 412/945.5006

Pfaffmann & Associates
223 Fourth Avenue
Pittsburgh, PA 15222
tel: 412/471.2470
fax: 412/471.2472

NO.	DATE	DESCRIPTION

REVISIONS

THE PREPARATION OF THIS DRAWING HAS BEEN FINANCED, IN PART, THROUGH A GRANT FROM THE U. S. DEPARTMENT OF TRANSPORTATION, FEDERAL TRANSIT ADMINISTRATION UNDER THE URBAN MASS TRANSPORTATION ACT OF 1964, AS AMENDED.

APPROVED 4/29/08

DMJM HARRIS | AECOM
FOUR GATEWAY CENTER
20TH FLOOR
PITTSBURGH, PA. 15222

APPROVED DATE

DESIGNED	LMC
DRAWN	SJM
CHECKED	MGF
IN CHARGE	RSP
DATE APRIL 29, 2008	
SCALE	

PORT AUTHORITY OF ALLEGHENY COUNTY
PITTSBURGH PENNSYLVANIA

NORTH SHORE CONNECTOR
GATEWAY STATION FINISHES
SIGN SCHEDULE

Port Authority
connecting people to all

CONTRACT NO. NSC-010G
DWG. NO. AR760 SHT. 173

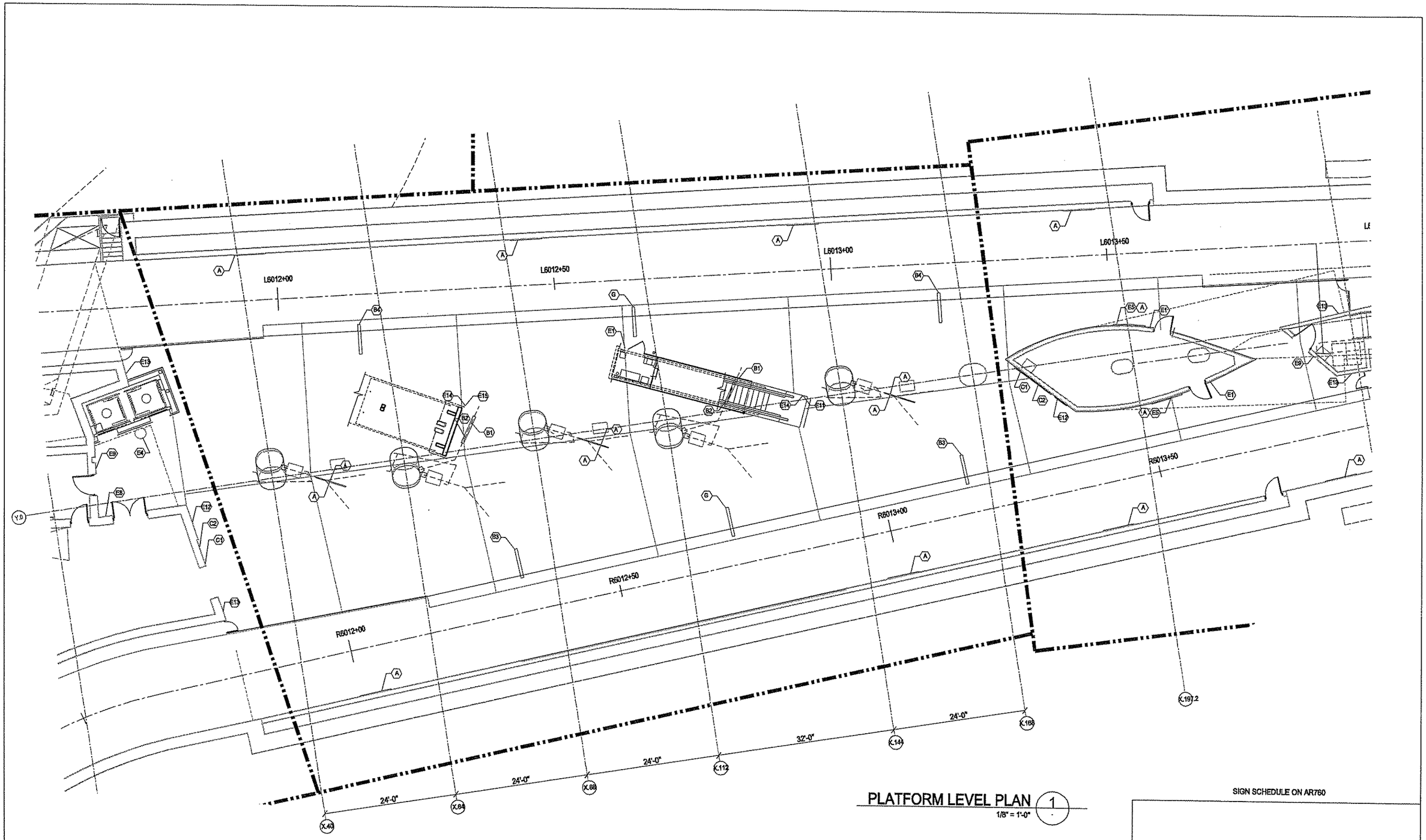

PLATFORM LEVEL PLAN (1)

1/8" = 1'-0"

SIGN SCHEDULE ON AR760

The light *motion* Collaborative
EDGE Studio and Pfeffmann & Associates

EDGE studio
5411 Penn Avenue
Pittsburgh, PA 15206
tel: 412.945.5005
fax: 412.945.5006

Pfeffmann & Associates
223 Fourth Avenue
Pittsburgh, PA 15222
tel: 412.471.2470
fax: 412.471.2472

NO.	DATE	DESCRIPTION

REVISIONS

THE PREPARATION OF THIS DRAWING HAS BEEN FINANCED, IN PART, THROUGH A GRANT FROM THE U. S. DEPARTMENT OF TRANSPORTATION, FEDERAL TRANSIT ADMINISTRATION UNDER THE URBAN MASS TRANSPORTATION ACT OF 1964, AS AMENDED.

APRIL 29, 2008

DMJM HARRIS | AECOM
FOUR GATEWAY CENTER
20TH FLOOR
PITTSBURGH, PA. 15222

David P. Kiang 4/29/08
APPROVED DATE

DESIGNED	LMC
DRAWN	SJM
CHECKED	MGF
IN CHARGE	RSP
DATE APRIL 29, 2008	
SCALE 1/8"=1'-0"	

8' 4' 0 8'

PORT AUTHORITY OF ALLEGHENY COUNTY
PITTSBURGH PENNSYLVANIA

NORTH SHORE CONNECTOR
GATEWAY STATION FINISHES
PLATFORM LEVEL SIGNAGE LAYOUT 1 OF 1

Port Authority
connecting people to life

CONTRACT NO. NSC-010G
DWG. NO. AR761 SHT. 174

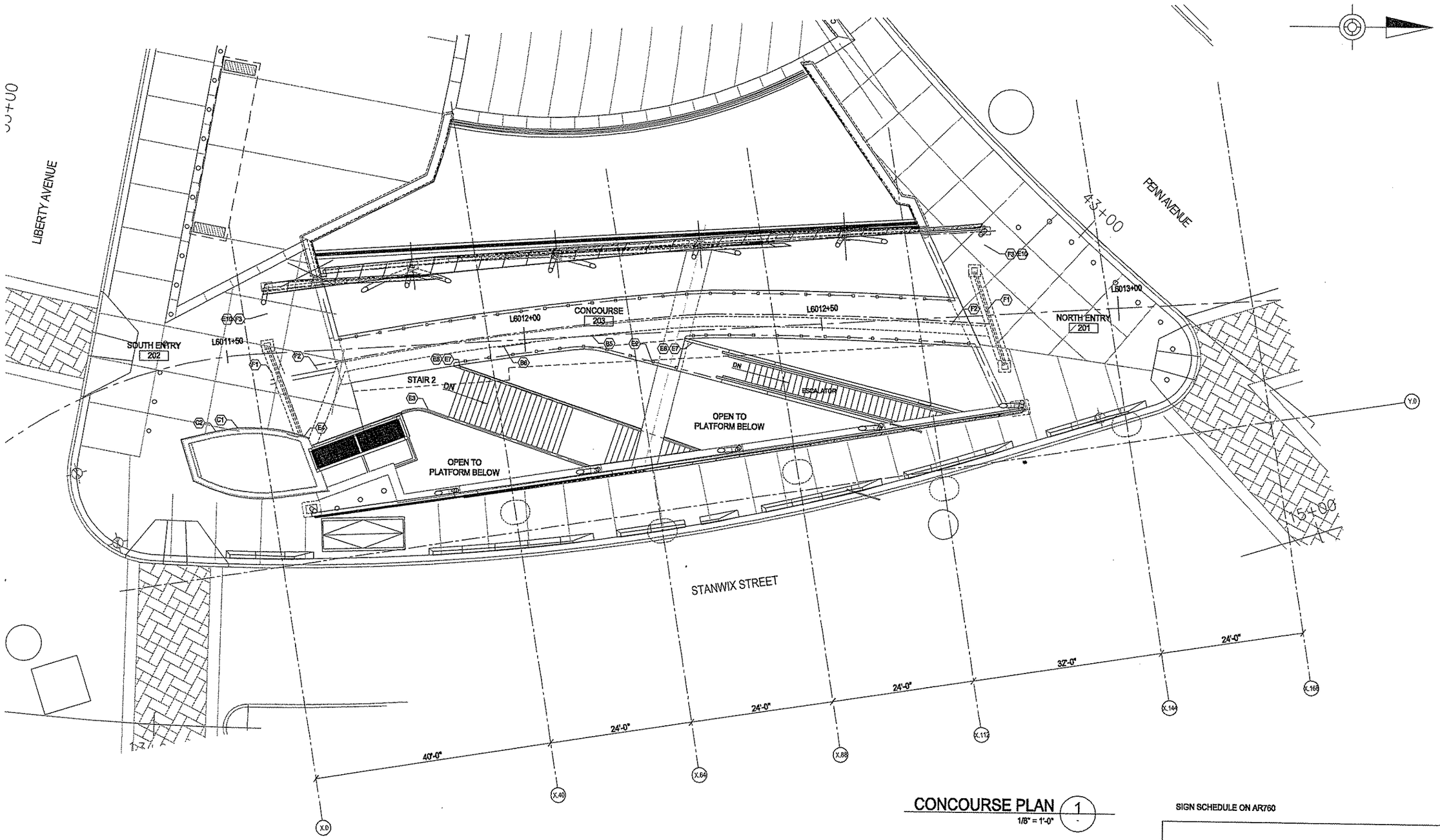

CONCOURSE PLAN 1

1/8" = 1'-0"

SIGN SCHEDULE ON AR760

The light / motion Collaborative
EDGE studio and Hofmann & Associates

EDGE studio
5411 Penn Avenue
Pittsburgh, PA 15206
tel 412/343.5005
fax 412/343.5000

Hofmann & Associates
523 Fourth Avenue
Pittsburgh, PA 15222
tel 412/471.2470
fax 412/471.2472

NO.	DATE	DESCRIPTION

REVISIONS

THE PREPARATION OF THIS DRAWING HAS BEEN FINANCED, IN PART, THROUGH A GRANT FROM THE U. S. DEPARTMENT OF TRANSPORTATION, FEDERAL TRANSIT ADMINISTRATION UNDER THE URBAN MASS TRANSPORTATION ACT OF 1964, AS AMENDED.

APPROVED SIGNATURE 2008

DMJM HARRIS | AECOM
FOUR GATEWAY CENTER
20TH FLOOR
PITTSBURGH, PA. 15222

APPROVED 4/29/08 DATE

DESIGNED	LMC
DRAWN	SJM
CHECKED	MGF
IN CHARGE	RSP
DATE APRIL 29, 2008	
SCALE 1/8"=1'-0"	

8' 4' 0 8'

PORT AUTHORITY OF ALLEGHENY COUNTY
PITTSBURGH PENNSYLVANIA

NORTH SHORE CONNECTOR
GATEWAY STATION FINISHES
CONCOURSE LEVEL SIGNAGE LAYOUT 1 OF 1

Port Authority
connect people to life

CONTRACT NO.	NSC-010G
DWG. NO. AR762	SHT. 175

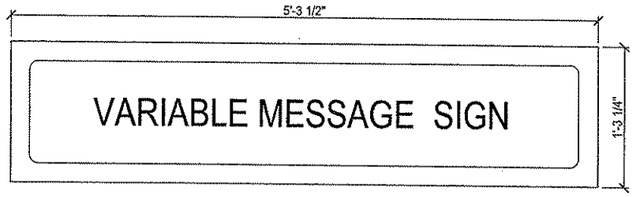

Ⓖ VARIABLE MESSAGE DISPLAY (13) AR760
1 1/2"=1'-0" 1-1/2" = 1'-0"

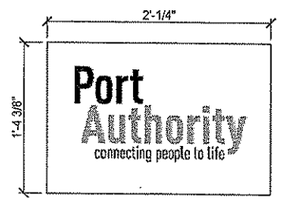

(F3) ENTRANCE SIGN (12) AR760
1"=1'-0" 1" = 1'-0"

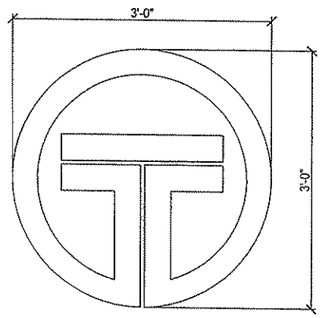

(F2) ENTRANCE SIGN (11) AR760
1"=1'-0" 1" = 1'-0"

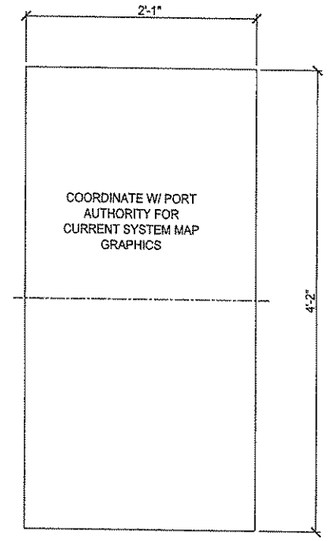

(C1) SYSTEM MAP (10) AR760
1 1/2"=1'-0" 1-1/2" = 1'-0"

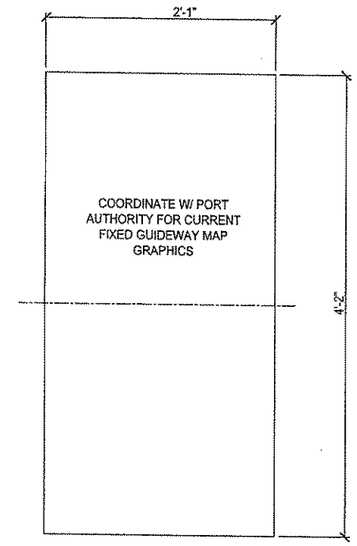

(C2) FIXED GUIDEWAY MAP (9) AR760
1 1/2"=1'-0" 1-1/2" = 1'-0"

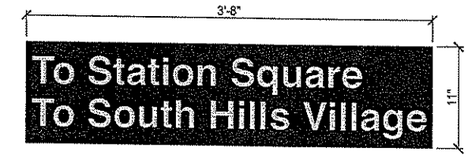

(B4) DESTINATION/DIRECTIONAL (5) AR760
1 1/2"=1'-0" 1-1/2" = 1'-0"

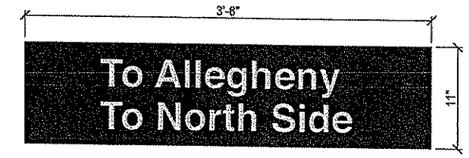

(B3) DESTINATION/DIRECTIONAL (4) AR760
1 1/2"=1'-0" 1-1/2" = 1'-0"

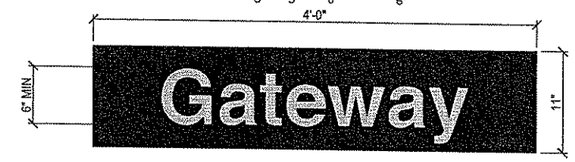

(A) STATION IDENTIFIER (3) AR760
1 1/2"=1'-0" 1-1/2" = 1'-0"

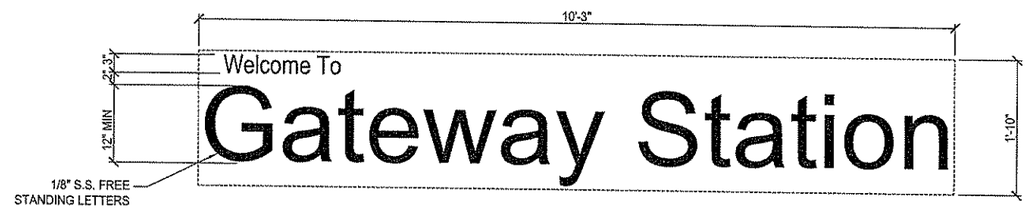

(F1) ENTRANCE SIGN (8) AR760
1"=1'-0" 1" = 1'-0"

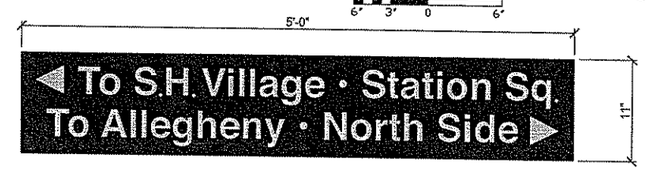

(B2) DESTINATION/DIRECTIONAL (2) AR760
1 1/2"=1'-0" 1-1/2" = 1'-0"

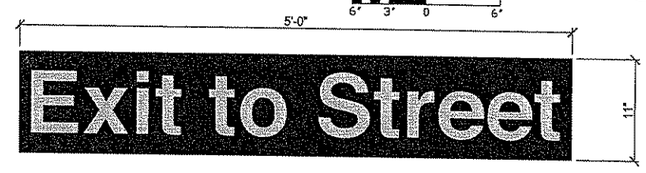

(B1) DESTINATION/DIRECTIONAL (1) AR760
1 1/2"=1'-0" 1-1/2" = 1'-0"

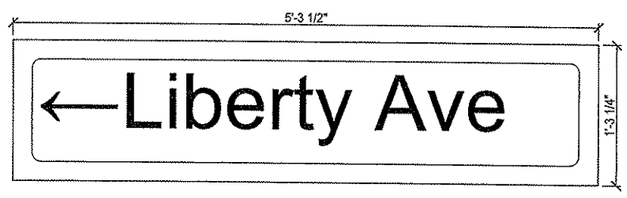

(B6) DESTINATION/DIRECTIONAL (7) AR760
1 1/2"=1'-0" 1-1/2" = 1'-0"

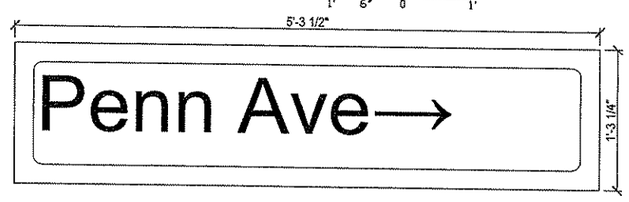

(B5) DESTINATION/DIRECTIONAL (6) AR760
1 1/2"=1'-0" 1-1/2" = 1'-0"

The light/motion Collaborative
EDGE studio and Pfaffmann & Associates

EDGE studio
5411 Penn Avenue
Pittsburgh, PA 15206
tel: 412/345.5005
fax: 412/345.5006

Pfaffmann & Associates
223 Fourth Avenue
Pittsburgh, PA 15222
tel: 412/471.2470
fax: 412/471.2472

NO.	DATE	DESCRIPTION

REVISIONS

THE PREPARATION OF THIS DRAWING HAS BEEN FINANCED, IN PART, THROUGH A GRANT FROM THE U. S. DEPARTMENT OF TRANSPORTATION, FEDERAL TRANSIT ADMINISTRATION UNDER THE URBAN MASS TRANSPORTATION ACT OF 1964, AS AMENDED.

APPROVED 4/29/08

DMJM HARRIS | AECOM
FOUR GATEWAY CENTER
20TH FLOOR
PITTSBURGH, PA. 15222

APPROVED DATE 4/29/08

DESIGNED	LMC
DRAWN	SJM
CHECKED	MGF
IN CHARGE	RSP
DATE APRIL 29, 2008	
SCALE	VARIES

PORT AUTHORITY OF ALLEGHENY COUNTY
PITTSBURGH PENNSYLVANIA

NORTH SHORE CONNECTOR
GATEWAY STATION FINISHES
SIGNAGE DETAILS
1 OF 2

Port Authority
connecting people to life

CONTRACT NO. NSC-010G
DWG. NO. AR763 SHT. 176

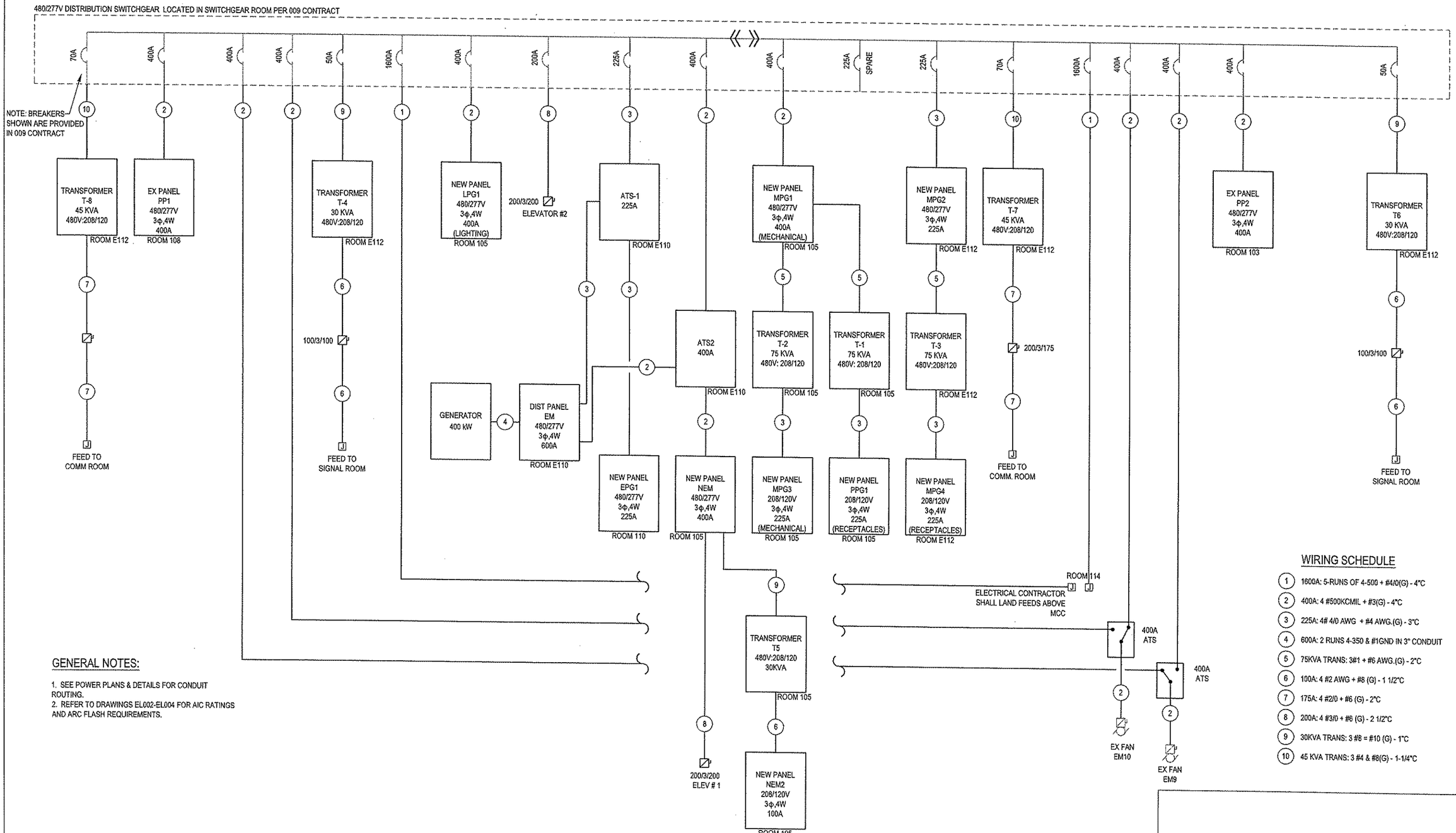

GENERAL NOTES:

1. SEE POWER PLANS & DETAILS FOR CONDUIT ROUTING.
2. REFER TO DRAWINGS EL002-EL004 FOR AIC RATINGS AND ARC FLASH REQUIREMENTS.

WIRING SCHEDULE

1. 1600A: 5-RUNS OF 4-500 + #4/0(G) - 4"C
2. 400A: 4 #500KCMIL + #3(G) - 4"C
3. 225A: 4# 4/0 AWG + #4 AWG.(G) - 3"C
4. 600A: 2 RUNS 4-350 & #1GND IN 3" CONDUIT
5. 75KVA TRANS: 3#1 + #6 AWG.(G) - 2"C
6. 100A: 4 #2 AWG + #8 (G) - 1 1/2"C
7. 175A: 4 #2/0 + #6 (G) - 2"C
8. 200A: 4 #3/0 + #6 (G) - 2 1/2"C
9. 30KVA TRANS: 3 #8 = #10 (G) - 1"C
10. 45 KVA TRANS: 3 #4 & #8(G) - 1-1/4"C

The light /motion Collaborative
EDGE studio and Platfmann & Associates

EDGE studio
5411 Penn Avenue
Pittsburgh, PA 15206
tel: 412/345-5005
fax: 412/345-5006

Platfmann & Associates
209 Fourth Avenue
Pittsburgh, PA 15222
tel: 412/471-2470
fax: 412/471-2472

Allen & Shariff
ENGINEERING
700 River Avenue, Suite 333
Pittsburgh, PA 15212
Tel: 412.322.9280
Fax: 412.322.9281

NO.	DATE	DESCRIPTION

REVISIONS

THE PREPARATION OF THIS DOCUMENT HAS BEEN FINANCED IN PART THROUGH A GRANT FROM THE FEDERAL TRANSIT ADMINISTRATION, U.S. DEPARTMENT OF TRANSPORTATION, UNDER THE URBAN MASS TRANSPORTATION ACT OF 1964, AS AMENDED, FOR THE PORT AUTHORITY OF ALLEGHENY COUNTY, PENNSYLVANIA.

COMMONWEALTH OF PENNSYLVANIA REGISTERED PROFESSIONAL Anthony E. Molinero Jr. ENGINEER 41354-E

SIGNATURE

DMJM HARRIS | AECOM
FOUR GATEWAY CENTER
20TH FLOOR
PITTSBURGH, PA 15222

APPROVED — DATE 4/29/08

DESIGNED	MTY
DRAWN	MTY
CHECKED	AEM
IN CHARGE	AEM
DATE APRIL 29, 2008	
SCALE	NOT TO SCALE

PORT AUTHORITY OF ALLEGHENY COUNTY
PITTSBURGH PENNSYLVANIA

NORTH SHORE CONNECTOR
GATEWAY STATION SHELL
ELECTRICAL RISER

Port Authority
connecting people to life

CONTRACT NO. NSC-010E
DWG. NO. EL 001 SHT. 202

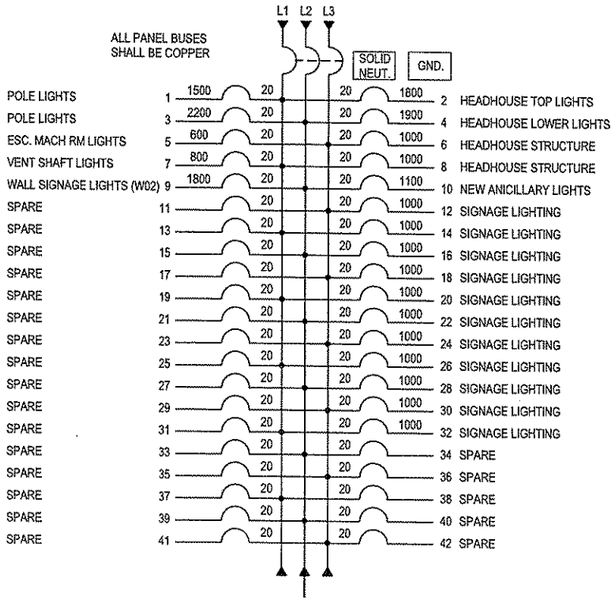

PANEL - LPG1

MAINS: 400A MCB
VOLTAGE: 480/277V
MTG./LOC.: SURFACE MOUNTED
AIC RATING: 25,000

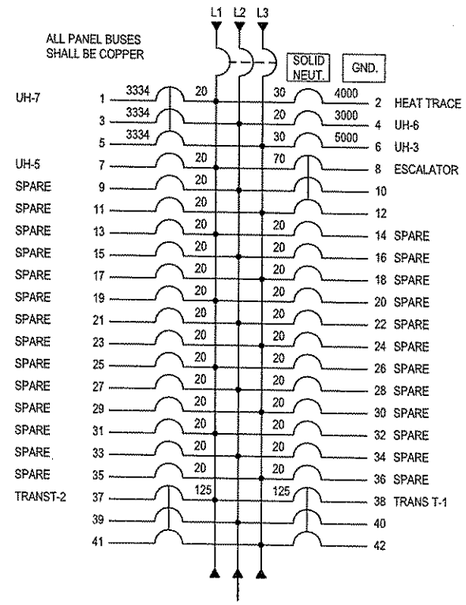

PANEL - MPG1

MAINS: 400A MCB
VOLTAGE: 480/277V
MTG./LOC.: SURFACE MOUNTED
AIC RATING: 25,000

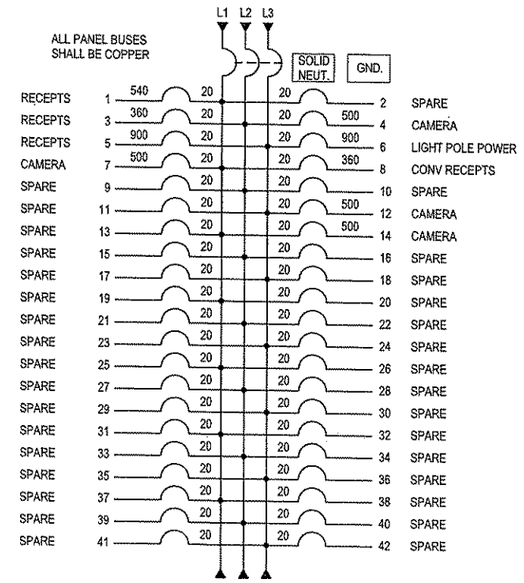

PANEL - PPG1

MAINS: 225A MCB
VOLTAGE: 208/120V
MTG./LOC.: SURFACE MOUNTED
AIC RATING: 22,000

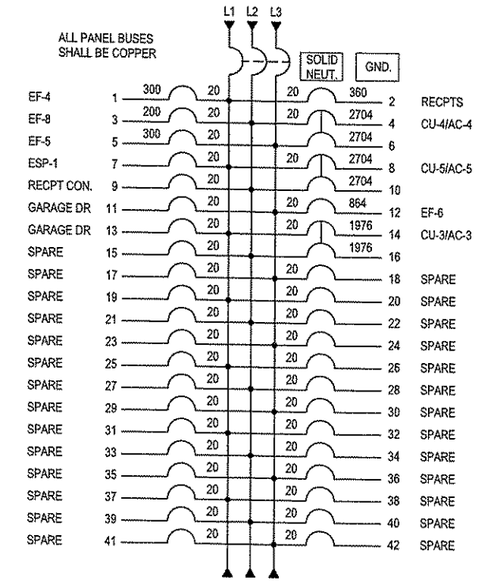

PANEL - MPG3

MAINS: 225A MCB
VOLTAGE: 208/120V
MTG./LOC.: SURFACE MOUNTED
AIC RATING: 22,000

GENERAL NOTES:

1. THE ELECTRICAL CONTRACTOR SHALL VERIFY THE AVAILABLE FAULT CURRENT WITH THE UTILITY COMPANY PRIOR TO BIDDING AND PROVIDE EQUIPMENT RATED ACCORDINGLY. SUBMIT FAULT CURRENT CALCULATIONS WITH SHOP DRAWING SUBMITTAL. INITIAL DESIGN IS BASED ON A UTILITY FAULT CURRENT OF 110,000 AMPS AT THE COLLECTOR BUS PROVIDED BY JOE BRESNEI OF DUQUESNE LIGHT COMPANY.

2. ALL BUSSING SHALL BE COPPER. PROVIDE FULL LENGTH VERTICAL AND FULL SIZE HORIZONTAL BUSSING IN ALL SWITCHBOARDS, DISTRIBUTION PANELS, & PANELBOARDS AS APPLICABLE.

3. ALL CIRCUIT BREAKERS SHALL BE BOLT-ON TYPE.

4. REFER TO ELECTRICAL SPECIFICATIONS FOR ADDITIONAL REQUIREMENTS.

5. THE ELECTRICAL CONTRACTOR SHALL PROVIDE FINAL SETTINGS REQUIRED FOR ALL ADJUSTABLE/ELECTRONIC TYPE CIRCUIT BREAKERS WITH LONG TIME, SHORT TIME, GF, INSTANTANEOUS, ETC. THE ELECTRICAL CONTRACTOR SHALL PROVIDE FINAL SHORT CIRCUIT COORDINATION STUDY AND AN ARC FAULT STUDY.

6. THE ELECTRICAL CONTRACTOR SHALL COMPLY WITH NEC ARTICLE 110.16 FOR LABELING OF PANELS FOR ARC FLASH HAZARD WARNING AS WELL AS FOLLOWING REQUIRED SAFETY PRECAUTIONS WHEN SERVICING OR MAINTAINING ELECTRICAL EQUIPMENT.

The light /motion Collaborative
EDGE studio
5411 Penn Avenue
Pittsburgh, PA 15206
tel: 412.363.5005
fax: 412.363.5005
Pfaffmann & Associates
223 Fourth Avenue
Pittsburgh, PA 15222
tel: 412.471.2470
fax: 412.471.2472

Allen & Shariff
ENGINEERING
700 River Avenue, Suite 333
Pittsburgh, PA 15212
Tel: 412.322.9280
Fax: 412.322.9281

NO.	DATE	DESCRIPTION

REVISIONS

THE PREPARATION OF THIS DOCUMENT HAS BEEN FINANCED IN PART THROUGH A GRANT FROM THE FEDERAL TRANSIT ADMINISTRATION, U. S. DEPARTMENT OF TRANSPORTATION, UNDER THE URBAN MASS TRANSPORTATION ACT OF 1964, AS AMENDED, FOR THE PORT AUTHORITY OF ALLEGHENY COUNTY, PENNSYLVANIA.

COMMONWEALTH OF PENNSYLVANIA REGISTERED PROFESSIONAL ENGINEER Anthony E. Molinaro 41354-E

SIGNATURE

DMJM HARRIS | AECOM
FOUR GATEWAY CENTER
20TH FLOOR
PITTSBURGH, PA. 15222

APPROVED 4/29/08 DATE

DESIGNED	MTY
DRAWN	MTY
CHECKED	AEM
IN CHARGE	AEM
DATE APRIL 29, 2008	
SCALE NOT TO SCALE	

PORT AUTHORITY OF ALLEGHENY COUNTY
PITTSBURGH PENNSYLVANIA

NORTH SHORE CONNECTOR
GATEWAY STATION SHELL
ELECTRICAL PANEL SCHEDULES

Port Authority connecting people to life

CONTRACT NO. NSC-010E
DWG. NO. EL 002 SHT. 203

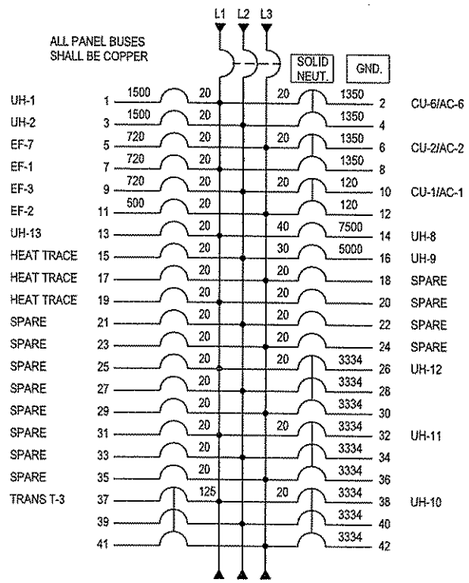

PANEL - MPG2

MAINS:	225A MCB
VOLTAGE:	480/277V
MTG./LOC.:	SURFACE MOUNTED
AIC RATING:	25,000

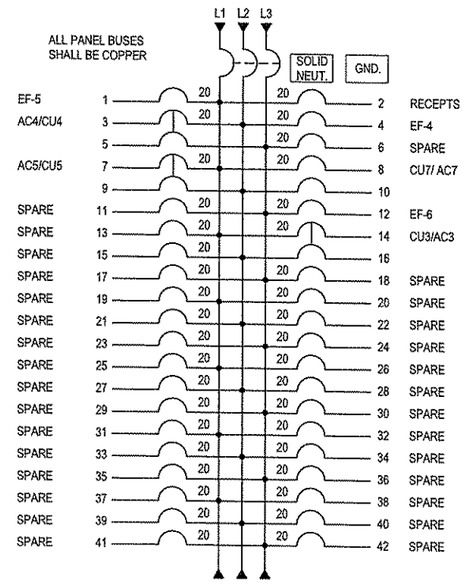

PANEL - MPG4

MAINS:	225A MCB
VOLTAGE:	208/120V
MTG./LOC.:	SURFACE MOUNTED
AIC RATING:	22,000

GENERAL NOTES:

1. THE ELECTRICAL CONTRACTOR SHALL VERIFY THE AVAILABLE FAULT CURRENT WITH THE UTILITY COMPANY PRIOR TO BIDDING AND PROVIDE EQUIPMENT RATED ACCORDINGLY. SUBMIT FAULT CURRENT CALCULATIONS WITH SHOP DRAWING SUBMITTAL. INITIAL DESIGN IS BASED ON A UTILITY FAULT CURRENT OF 110,000 AMPS AT THE COLLECTOR BUS PROVIDED BY JOE BRESNEI OF DUQUESNE LIGHT COMPANY.

2. ALL BUSSING SHALL BE COPPER. PROVIDE FULL LENGTH VERTICAL AND FULL SIZE HORIZONTAL BUSSING IN ALL SWITCHBOARDS, DISTRIBUTION PANELS, & PANELBOARDS AS APPLICABLE.

3. ALL CIRCUIT BREAKERS SHALL BE BOLT-ON TYPE.

4. REFER TO ELECTRICAL SPECIFICATIONS FOR ADDITIONAL REQUIREMENTS.

5. THE ELECTRICAL CONTRACTOR SHALL PROVIDE FINAL SETTINGS REQUIRED FOR ALL ADJUSTABLE/ELECTRONIC TYPE CIRCUIT BREAKERS WITH LONG TIME, SHORT TIME, GF, INSTANTANEOUS, ETC. THE ELECTRICAL CONTRACTOR SHALL PROVIDE FINAL SHORT CIRCUIT COORDINATION STUDY AND AN ARC FAULT STUDY.

6. THE ELECTRICAL CONTRACTOR SHALL COMPLY WITH NEC ARTICLE 110.16 FOR LABELING OF PANELS FOR ARC FLASH HAZARD WARNING AS WELL AS FOLLOWING REQUIRED SAFETY PRECAUTIONS WHEN SERVICING OR MAINTAINING ELECTRICAL EQUIPMENT.

The light /motion Collaborative
EDGE studio and Pfafmann & Associates

EDGE studio
5411 Penn Avenue
Pittsburgh, PA 15206
tel: 412.345.5005
fax: 412.345.5006

Pfafmann & Associates
223 Fourth Avenue
Pittsburgh, PA 15222
tel: 412.471.2470
fax: 412.471.2473

Allen & Shariff
ENGINEERING
700 River Avenue, Suite 333
Pittsburgh, PA 15212
Tel: 412.322.9280
Fax: 412.322.9281

NO.	DATE	DESCRIPTION

REVISIONS

THE PREPARATION OF THIS DOCUMENT HAS BEEN FINANCED IN PART THROUGH A GRANT FROM THE FEDERAL TRANSIT ADMINISTRATION, U.S. DEPARTMENT OF TRANSPORTATION, UNDER THE URBAN MASS TRANSPORTATION ACT OF 1964, AS AMENDED, FOR THE PORT AUTHORITY OF ALLEGHENY COUNTY, PENNSYLVANIA.

COMMONWEALTH OF PENNSYLVANIA REGISTERED PROFESSIONAL ENGINEER Anthony E. Molinaro 41354-E

SIGNATURE

DMJM HARRIS | AECOM
FOUR GATEWAY CENTER
20TH FLOOR
PITTSBURGH, PA. 15222

APPROVED 4/29/08 DATE

DESIGNED	MTY
DRAWN	MTY
CHECKED	AEM
IN CHARGE	AEM
DATE APRIL 29, 2008	
SCALE NOT TO SCALE	

PORT AUTHORITY OF ALLEGHENY COUNTY
PITTSBURGH PENNSYLVANIA

NORTH SHORE CONNECTOR
GATEWAY STATION SHELL
ELECTRICAL PANEL SCHEDULES

Port Authority
connecting people to life

CONTRACT NO. NSC-010E
DWG. NO. EL 003 SHT. 204

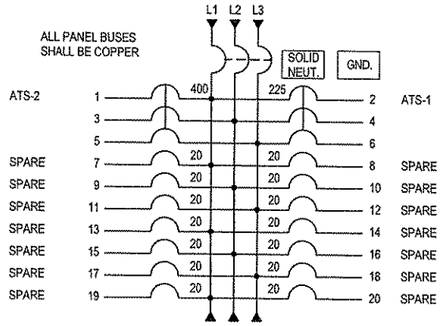

DIST PANEL - EM

MAINS:	600A MCB
VOLTAGE:	480/277V
MTG./LOC.:	SURFACE MOUNTED
AIC RATING:	25,000

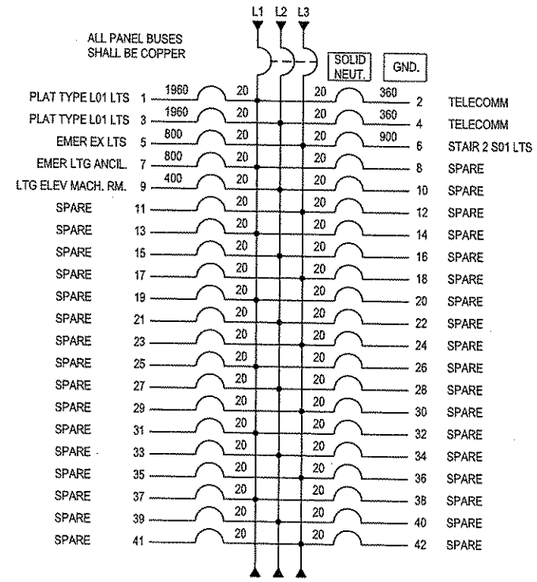

PANEL - EPG

MAINS:	225A MCB
VOLTAGE:	480/277V
MTG./LOC.:	SURFACE MOUNTED
AIC RATING:	25,000

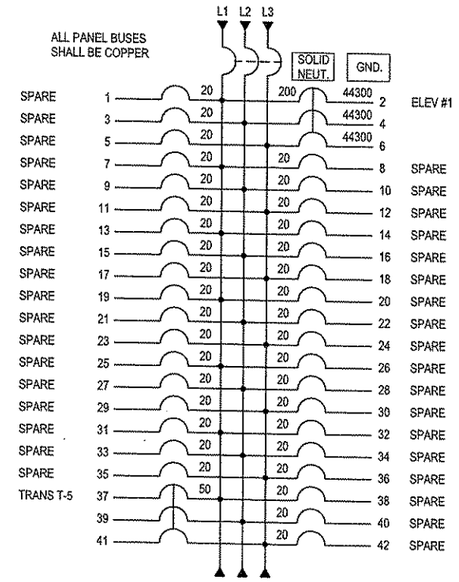

PANEL - NEM

MAINS:	400A MCB
VOLTAGE:	480/277V
MTG./LOC.:	SURFACE MOUNTED
AIC RATING:	25,000

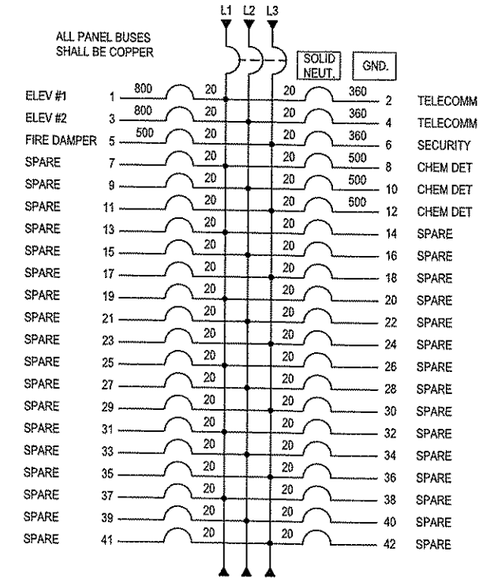

PANEL - NEM2

MAINS:	100A MCB
VOLTAGE:	208/120V
MTG./LOC.:	SURFACE MOUNTED
AIC RATING:	22,000

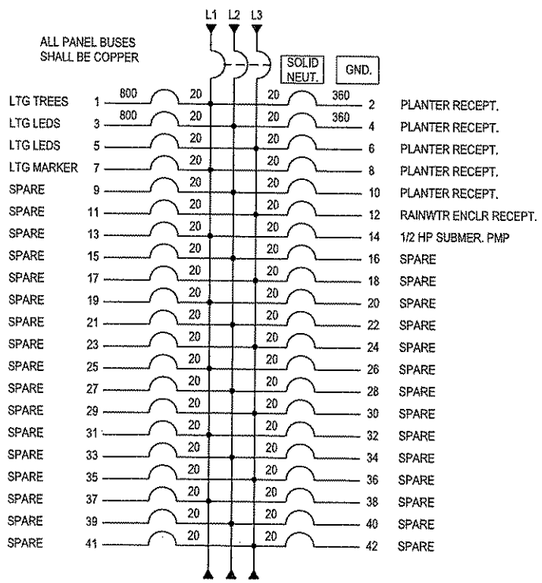

PANEL - P

MAINS:	200A MCB
VOLTAGE:	208/120V
MTG./LOC.:	SURFACE MOUNTED
AIC RATING:	65,000
LOCATION:	PLAZA LEVEL FUELING PORT

GENERAL NOTES:

1. THE ELECTRICAL CONTRACTOR SHALL VERIFY THE AVAILABLE FAULT CURRENT WITH THE UTILITY COMPANY PRIOR TO BIDDING AND PROVIDE EQUIPMENT RATED ACCORDINGLY. SUBMIT FAULT CURRENT CALCULATIONS WITH SHOP DRAWING SUBMITTAL. INITIAL DESIGN IS BASED ON A UTILITY FAULT CURRENT OF 110,000 AMPS AT THE COLLECTOR BUS PROVIDED BY JOE BRESNEI OF DUQUESNE LIGHT COMPANY.

2. ALL BUSSING SHALL BE COPPER. PROVIDE FULL LENGTH VERTICAL AND FULL SIZE HORIZONTAL BUSSING IN ALL SWITCHBOARDS, DISTRIBUTION PANELS, & PANELBOARDS AS APPLICABLE.

3. ALL CIRCUIT BREAKERS SHALL BE BOLT-ON TYPE.

4. REFER TO ELECTRICAL SPECIFICATIONS FOR ADDITIONAL REQUIREMENTS.

5. THE ELECTRICAL CONTRACTOR SHALL PROVIDE FINAL SETTINGS REQUIRED FOR ALL ADJUSTABLE/ELECTRONIC TYPE CIRCUIT BREAKERS WITH LONG TIME, SHORT TIME, GF, INSTANTANEOUS, ETC. THE ELECTRICAL CONTRACTOR SHALL PROVIDE FINAL SHORT CIRCUIT COORDINATION STUDY AND AN ARC FAULT STUDY.

6. THE ELECTRICAL CONTRACTOR SHALL COMPLY WITH NEC ARTICLE 110.16 FOR LABELING OF PANELS FOR ARC FLASH HAZARD WARNING AS WELL AS FOLLOWING REQUIRED SAFETY PRECAUTIONS WHEN SERVICING OR MAINTAINING ELECTRICAL EQUIPMENT.

The light / motion Collaborative
EDGE studio and Plattmann & Associates

EDGE studio
5411 Penn Avenue
Pittsburgh, PA 15206
tel: 412.345.5005
fax: 412.345.5006

Plattmann & Associates
220 Fourth Avenue
Pittsburgh, PA 15222
tel: 412.471.2470
fax: 412.471.2472

Allen & Shariff
ENGINEERING
700 River Avenue, Suite 333
Pittsburgh, PA 15212
Tel: 412.322.9280
Fax: 412.322.9281

NO.	DATE	DESCRIPTION

REVISIONS

THE PREPARATION OF THIS DOCUMENT HAS BEEN FINANCED IN PART THROUGH A GRANT FROM THE FEDERAL TRANSIT ADMINISTRATION, U.S. DEPARTMENT OF TRANSPORTATION, UNDER THE URBAN MASS TRANSPORTATION ACT OF 1964, AS AMENDED, FOR THE PORT AUTHORITY OF ALLEGHENY COUNTY, PENNSYLVANIA.

COMMONWEALTH OF PENNSYLVANIA REGISTERED PROFESSIONAL Anthony E. Molinaro Jr. ENGINEER 41354-E

SIGNATURE

DMJM HARRIS | AECOM
FOUR GATEWAY CENTER
20TH FLOOR
PITTSBURGH, PA. 15222

APPROVED — DATE 4/29/08

DESIGNED	MTY
DRAWN	MTY
CHECKED	AEM
IN CHARGE	AEM
DATE APRIL 29, 2008	
SCALE NOT TO SCALE	

PORT AUTHORITY OF ALLEGHENY COUNTY
PITTSBURGH PENNSYLVANIA

NORTH SHORE CONNECTOR
GATEWAY STATION SHELL
ELECTRICAL PANEL SCHEDULES

Port Authority connecting people to life

CONTRACT NO. NSC-010E

DWG. NO. EL 004 SHT. 205

"L" SERIES CONDUIT SCHEDULE

CONDUIT	POWER TYPE	SIZE	SERVES	WIRES
L1	208/120V	1"	RECEPTACLES	4 # 8 & #10G
L2	208/120V	1"	CAMERA POWER	2#10 + #12G
L3	208/120V	1"	SPARE	NWR
L4	480/277V	1"	EMERGENCY LIGHTS	2#10 + #12G
L5	480/277V	2 1/2"	ESCALATOR POWER	4 # 3 & #8G
L6	480/277V	1"	SPARE	NWR
L7	COMMUNICATIONS	1"	FIRE ALARM - NOTIFYING	FA
L8	COMMUNICATIONS	1"	FIRE ALARM - SIGNALING	FA
L9	208/120V	1"	RECEPTACLES	2#10 + #12G
L10	208/120V	1"	SPARE	NWR
L11	480/277V	1"	EMERGENCY LIGHTS	2#10 + #12G
L12	480/277V	2 1/2"	ESCALATOR	4 # 3 & #8G
L13	480/277V	1"	SPARE	NWR
L14	COMMUNICATIONS	2"	FIRE ALARM - NOTIFYING	FA
L15	COMMUNICATIONS	2"	FIRE ALARM - SIGNALING	FA
L16	208/120V	1"	RECEPTACLES	2#10 + #12G
L17	480/277V	1"	ESCALATOR LIGHTS	2 # 12 & #12G
L18	208/120V	1"	SPARE	NWR
L19	480/277V	1"	EMERGENCY LIGHTS	2#10 + #12G
L20	480/277V	1"	SPARE	NWR
L21	COMMUNICATIONS	1"	FIRE ALARM - NOTIFYING	FA
L22	COMMUNICATIONS	1"	FIRE ALARM - SIGNALING	FA
L23	208/120V	1"	SPARE	NWR
L24	208/120V	1"	SPARE	NWR
L25	480/277V	1"	EMERGENCY LIGHTS	2#10 + #12G
L26	480/277V	1"	SPARE	NWR
L27	COMMUNICATIONS	1"	FIRE ALARM - NOTIFYING	FA
L28	COMMUNICATIONS	1"	FIRE ALARM - SIGNALING	FA
L29	208/120V	1"	CCTV POWER	2#10 + #12G
L30	208/120V	1"	SPARE	NWR
L31	480/277V	1"	EMERGENCY LIGHTS	2#10 + #12G
L32	480/277V	1"	SPARE	NWR
L33	COMMUNICATIONS	1"	FIRE ALARM - NOTIFYING	PULLWIRE
L34	COMMUNICATIONS	1"	FIRE ALARM - SIGNALING	PULLWIRE
L35	208/120V	1"	RECEPTACLES	2#10 + #12G
L36	208/120V	1"	SPARE	NWR
L37	480/277V	1"	EMERGENCY LIGHTS	2#10 + #12G
L38	480/277V	1"	SPARE	NWR
L39	COMMUNICATIONS	1"	FIRE ALARM - NOTIFYING	FA
L40	COMMUNICATIONS	1"	FIRE ALARM - SIGNALING	FA
L41	208/120V	1"	CCTV POWER	2#10 + #12G
L42	208/120V	1"	SPARE	NWR
L43	480/277V	1"	EMERGENCY LIGHTS	2#10 + #12G

"L" SERIES CONDUIT SCHEDULE

CONDUIT	POWER TYPE	SIZE	SERVES	WIRES
L44	480/277V	1"	SPARE	PULLWIRE
L45	COMMUNICATIONS	1"	FIRE ALARM - NOTIFYING	FA
L46	COMMUNICATIONS	1"	FIRE ALARM - SIGNALING	FA
L47	208/120V	1"	RECEPTACLES	2#10 + #12G
L48	208/120V	1"	SPARE	NWR
L49	480/277V	1"	EMERGENCY LIGHTS	2#10 + #12G
L50	480/277V	1"	SPARE	NWR
L51	COMMUNICATIONS	2"	FIRE ALARM - NOTIFYING	FA
L52	COMMUNICATIONS	2"	FIRE ALARM - SIGNALING	FA
L53	208/120V	1"	RECEPTACLES	2#10 + #12G
L54	208/120V	1"	SPARE	NWR
L55	480/277V	1"	EMERGENCY LIGHTS	2#10 + #12G
L56	480/277V	1"	SPARE	NWR
L57	COMMUNICATIONS	2"	FIRE ALARM - NOTIFYING	FA
L58	COMMUNICATIONS	2"	FIRE ALARM - SIGNALING	FA
L59	208/120V	1"	RECEPTACLES	2#10 + #12G
L60	208/120V	1"	SPARE	NWR
L61	480/277V	1"	EMERGENCY LIGHTS	2#10 + #12G
L62	480/277V	1"	SPARE	NWR
L63	COMMUNICATIONS	2"	FIRE ALARM - NOTIFYING	FA
L64	COMMUNICATIONS	2"	FIRE ALARM - SIGNALING	FA
L65	208/120V	1"	CAMERA POWER	2#10 + #12G
L66	208/120V	1"	SPARE	NWR
L67	208/120V	1"	CARD READER POWER	CR
L68	COMMUNICATIONS	1"	CARD READER SIGNAL	CR
L69	208/120V	1"	CARD READER POWER	CR
L70	COMMUNICATIONS	1"	CARD READER SIGNAL	CR
L71	208/120V	1"	RECEPTACLES	2#10 + #12G
L72	COMMUNICATIONS	1"	CARD READER SIGNAL	CR
L73	208/120V	1"	CARD READER POWER	CR
L74	COMMUNICATIONS	1"	CARD READER SIGNAL	CR
L75	208/120V	1"	CARD READER POWER	CR
L76	208/120V	1"	RECEPTACLES	2#10 + #12G
L77	208/120V	1"	SPARE	NWR
L78	480/277V	1"	NORMAL LIGHTS	2#10 + #12G
L79	480/277V	1"	SPARE	NWR
L80	COMMUNICATIONS	2"	FIRE ALARM - NOTIFYING	FA
L81	COMMUNICATIONS	2"	FIRE ALARM - SIGNALING	FA
L82	COMMUNICATIONS	1"	CARD READER SIGNAL	NWR
L83	COMMUNICATIONS	1"	SPARE	NWR
L84	COMMUNICATIONS	1"	SPARE	NWR
L85	480/277V	2 1/2"	ESCALATOR POWER	4 # 3 & #8G
L86	COMMUNICATIONS	1"	SPARE	NWR

"L" SERIES CONDUIT SCHEDULE

CONDUIT	POWER TYPE	SIZE	SERVES	WIRES
L87	208/120V	1"	CARD READER POWER	CR
L88	208/120V	1"	SUMP PUMP	2#10 + #12G
L89	208/120V	1"	CARD READER POWER	CR
L90	COMMUNICATIONS	1"	CARD READER SIGNAL	CR
L91	COMMUNICATIONS	1"	SPARE	NWR
L92	COMMUNICATIONS	1"	SPARE	NWR
L93	COMMUNICATIONS	1"	SPARE	NWR
L94	208/120V	1"	CAMERA POWER	CR
L95	COMMUNICATIONS	1"	CAMERA SIGNAL	NWR
L96	COMMUNICATIONS	1"	SPARE	NWR
L97	COMMUNICATIONS	1"	CARD READER POWER	2#10 + #12G
L98	COMMUNICATIONS	1"	CARD READER SIGNAL	PULLWIRE
L99	208/120V	1"	CARD READER POWER	2#10 + #12G
L100	COMMUNICATIONS	1"	SPARE	NWR
L101	COMMUNICATIONS	1"	SPARE	NWR
L102	COMMUNICATIONS	1"	SPARE	NWR
L103	208/120V	1"	SUMP POWER	2#10 + #12G
L104	208/120V	1"	CAMERA POWER	2#10 + #12G
L105	208/120V	1"	CARD READER POWER	CR
L106	COMMUNICATIONS	1"	CARD READER SIGNAL	CR
L107	COMMUNICATIONS	1"	SPARE	NWR
L108	208/120V	-	CAMERA POWER	NWR
L109	480/277V	1"	SPARE	NWR
L110	208/120V	1"	SPARE	NWR
L111	480/277V	1"	SPARE	NWR
L112	480/277V	1"	SPARE	NWR
L113	208/120V	1"	SPARE	NWR
L114	COMMUNICATIONS	1"	SPARE	NWR
L115	480/277V	1"	SPARE	NWR
L116	COMMUNICATIONS	1"	CARD READER SIGNAL	NWR
L117	208/120V	1"	CARD READER POWER	NWR
L118	480/277V	1"	NORMAL LIGHTS	2#10 + #12G
L119	480/277V	1"	NORMAL LIGHTS	2#10 + #12G
L120	480/277V	1"	NORMAL LIGHTS	2#10 + #12G
L121	480/277V	1"	NORMAL LIGHTS	2#10 + #12G
L122	480/277V	1"	NORMAL LIGHTS	2#10 + #12G
L123	480/277V	1"	NORMAL LIGHTS	2#10 + #12G
L124	480/277V	1"	NORMAL LIGHTS	2#10 + #12G
L125	480/277V	1"	NORMAL LIGHTS	2#10 + #12G
L126	480/277V	1"	EMERGENCY LIGHTS	2#10 + #12G
L127	480/277V	1"	EMERGENCY LIGHTS	2#10 + #12G
L128	-	-	NOT USED	-
L129	208/120V	1"	SUMP POWER	2#10 + #12G

"L" SERIES CONDUIT SCHEDULE

CONDUIT	POWER TYPE	SIZE	SERVES	WIRES
L130	480/277V	1"	LIGHTING	2#10 + #12G
L131	480/277V	1"	EMERGENCY LIGHTS	2#10 + #12G
L132	-	-	NOT USED	-
L133	208/120V	1"	CAMERA POWER	2#10 + #12G
L134	480/277V	1"	SIGNAGE	2#10 + #12G
L135	208/120V	1"	FUTURE TURNSTILE	NWR
L136	208/120V	1"	FUTURE TURNSTILE	NWR
L137	208/120V	1"	FUTURE TICKETING	NWR
L138	208/120V	1"	FUTURE TICKETING	NWR
L139	COMMUNICATIONS	1"	FIRE ALARM SIGNAL	FA
L140	COMMUNICATIONS	1"	FIRE ALARM SIGNAL	FA
L141	COMMUNICATIONS	1"	FIRE ALARM NOTIFYING	FA
L142	COMMUNICATIONS	1"	FIRE ALARM NOTIFYING	FA
L143	COMMUNICATIONS	1"	FIRE ALARM SIGNAL	FA
L144	COMMUNICATIONS	1"	FIRE ALARM NOTIFYING	FA
L145	480/277V	1"	SPARE	NWR
L146	208/120V	1"	SPARE	NWR
L147	COMMUNICATIONS	1"	SPARE	NWR
L148	COMMUNICATIONS	2"	FIRE ALARM CONTROL PANEL	FA
L149	COMMUNICATIONS	2"	FIRE ALARM CONTROL PANEL	FA
L150	208/120V	1"	RECEPTACLES	2#10 + #12G
L151	208/120V	1"	RECEPTACLES	2#10 + #12G
L152	208/120V	1"	RECEPTACLES	2#10 + #12G
L153	208/120V	1"	CAMERA	2#10 + #12G
L154	COMMUNICATIONS	1"	SPARE	NWR
L155	208/120V	1"	SPARE	NWR
L156	480/277V	1"	NORMAL LIGHTS	2#10 + #12G
L157	COMMUNICATIONS	1"	SPARE	NWR
L158	480/277	1"	NORMAL LIGHTS	2#10 + #12G
L159	208/120V	1"	RECEPTACLES	2#10 + #12G
L160	208/120V	1"	SPARE	NWR
L161	-	-	NOT USED	-
L159	COMMUNICATIONS	1"	SPARE	NWR
L159	COMMUNICATIONS	1"	CARD READER SIGNAL	NWR
L160	COMMUNICATIONS	1"	INTERCOMM AREA OF REFUGE	NWR
L161	COMMUNICATIONS	1"	INTERCOMM AREA OF REFUGE	NWR
L162	COMMUNICATIONS	1"	INTERCOMM AREA OF REFUGE	NWR
L163	COMMUNICATIONS	1"	INTERCOMM AREA OF REFUGE	NWR
L164	COMMUNICATIONS	1"	INTERCOMM AREA OF REFUGE	NWR

GENERAL NOTE:
1. ALL CONDUITS EXISTING AND INSTALLED PER 04 CONTRACT. ALL CONDUIT PROVIDED WITH PULL STRING.
2. NWR = NO WORK REQUIRED.
3. CR = CONTRACTOR SIZED WIRE FOR CARD READER SYSTEM.
4. FA = CONTRACTOR SIZED WIRE FOR FIRE ALARM SYSTEM.

The light / motion Collaborative
EDGE studio and Pfaffmann & Associates

EDGE studio
5411 Penn Avenue
Pittsburgh, PA 15206
tel: 412.363.5005
fax: 412.363.5006

Pfaffmann & Associates
223 Fourth Avenue
Pittsburgh, PA 15222
tel: 412.471.2470
fax: 412.471.2472

Allen & Shariff
ENGINEERING
700 River Avenue, Suite 333
Pittsburgh, PA 15212
Tel: 412.322.9280
Fax: 412.322.9281

NO.	DATE	DESCRIPTION

REVISIONS

THE PREPARATION OF THIS DOCUMENT HAS BEEN FINANCED IN PART THROUGH A GRANT FROM THE FEDERAL TRANSIT ADMINISTRATION, U.S. DEPARTMENT OF TRANSPORTATION, UNDER THE URBAN MASS TRANSPORTATION ACT OF 1964, AS AMENDED, FOR THE PORT AUTHORITY OF ALLEGHENY COUNTY, PENNSYLVANIA.

COMMONWEALTH OF PENNSYLVANIA REGISTERED PROFESSIONAL ENGINEER Anthony E. Molinaro 41354-E

SIGNATURE

DMJM HARRIS | AECOM
FOUR GATEWAY CENTER
20TH FLOOR
PITTSBURGH, PA. 15222

APPROVED — DATE 4/29/08

DESIGNED	MTY
DRAWN	MTY
CHECKED	AEM
IN CHARGE	AEM
DATE APRIL 29, 2008	
SCALE	NOT TO SCALE

PORT AUTHORITY OF ALLEGHENY COUNTY
PITTSBURGH PENNSYLVANIA

NORTH SHORE CONNECTOR
GATEWAY STATION SHELL
"L" CONDUIT SCHEDULE PLATFORM LEVEL

Port Authority
connecting people to life

CONTRACT NO. NSC-010E
DWG. NO. EL 005 SHT. 206

MECHANICAL EQUIPMENT SCHEDULE

ITEM NUMBER	VOLTAGE AND PHASE	AMPACITY (A)	CONNECTION	WIRE SIZE	CONDUIT
EF-1	120V-1Ø	9.8 AMPS	BO	2#12, 1#12 (G)	3/4"C.
EF-2	120V-1Ø	7.2 AMPS	BO	2#12, 1#12 (G)	3/4"C.
EF-3	120V-1Ø	9.8 AMPS	BO	2#12, 1#12 (G)	3/4"C.
EF-4	120V-1Ø	4.4 AMPS	BO	2#12, 1#12 (G)	3/4"C.
EF-5	120V-1Ø	4.4 AMPS	BO	2#12, 1#12 (G)	3/4"C.
EF-6	120V-1Ø	7.2 AMPS	BO	2#12, 1#12 (G)	3/4"C.
EF-7	120V-1Ø	9.8 AMPS	BO	2#12, 1#12 (G)	3/4"C.
EF-8	120V-1Ø	1.0 AMPS	BO	2#12, 1#12 (G)	3/4"C.
AC-1	208V-1Ø	1.0 AMPS	BO	3#12, 1#12 (G)	3/4"C.
AC-2	208V-1Ø	1.0 AMPS	BO	3#12, 1#12 (G)	3/4"C.
AC-3	208V-1Ø	1.0 AMPS	BO	3#12, 1#12 (G)	3/4"C.
AC-4	208V-1Ø	1.0 AMPS	BO	3#12, 1#12 (G)	3/4"C.
AC-5	208V-1Ø	1.0 AMPS	BO	3#12, 1#12 (G)	3/4"C.
AC-6	208V-1Ø	1.0 AMPS	BO	3#12, 1#12 (G)	3/4"C.
AC-7	208V-1Ø	1.0 AMPS	BO	3#12, 1#12 (G)	3/4"C.
AC-8	208V-1Ø	1.0 AMPS	BO	3#12, 1#12 (G)	3/4"C.
CU-1	208V-1Ø	13 AMPS	BO	3#12, 1#12 (G)	3/4"C.
CU-2	208V-1Ø	13 AMPS	BO	3#12, 1#12 (G)	3/4"C.
CU-3	208V-1Ø	18 AMPS	BO	3#10, 1#10 (G)	1"C.
CU-4	208V-1Ø	25 AMPS	BO	3#8, 1#10 (G)	1"C.
CU-5	208V-1Ø	25 AMPS	BO	3#8, 1#10 (G)	1"C.
CU-6	208V-1Ø	13 AMPS	BO	3#12, 1#12 (G)	3/4"C.
CU-7	208V-1Ø	18 AMPS	BO	3#10, 1#10 (G)	1"C.
CU-8	208V-1Ø	18 AMPS	BO	3#10, 1#10 (G)	1"C.
UH-1	120V-1Ø	12.5 AMPS	MMS	2#12, 1#12 (G)	3/4"C.
UH-2	120V-1Ø	12.5 AMPS	MMS	2#12, 1#12 (G)	3/4"C.
UH-3	277V-1Ø	18.0 AMPS	MMS	2#10, 1#10 (G)	1"C.
UH-4	277V-1Ø	18.0 AMPS	MMS	2#10, 1#10 (G)	1"C.
UH-5	277V-1Ø	18.0 AMPS	MMS	2#10, 1#10 (G)	1"C.
UH-6	277V-1Ø	11.0 AMPS	MMS	2#12, 1#12 (G)	3/4"C.
UH-7	480V-3Ø	12.0 AMPS	DISC	3#12, 1#12 (G)	3/4"C.
UH-8	277V-1Ø	27 AMPS	MMS	2#8, 1#10 (G)	1"C.
UH-9	277V-1Ø	18.0 AMPS	MMS	2#10, 1#10 (G)	1"C.
UH-10	480V-3Ø	12.0 AMPS	DISC	3#12, 1#12 (G)	3/4"C.
UH-11	480V-3Ø	12.0 AMPS	DISC	3#12, 1#12 (G)	3/4"C.
UH-12	480V-3Ø	12.0 AMPS	DISC	3#12, 1#12 (G)	3/4"C.
SF-1	120V-1Ø	9.8 AMPS	MMS	2#12, 1#12(G)	1"C.
DH-1	480V-3Ø	22.0 AMPS	BO	3#10, 1#10 (G)	1"C.
ESP-1	120V-1Ø	8.0 AMPS	MMS	2#12, 1#12 (G)	3/4"C.
ESP-2	120V-1Ø	8.0 AMPS	MMS	2#12, 1#12 (G)	3/4"C.
SP-1 PANEL	208V-1Ø	18.6 AMPS	DISC	3#12, 1#12 (G)	3/4"C.
SP-2 PANEL	120V-1Ø	9.7 AMPS	MMS	2#12, 1#12 (G)	3/4"C.
SP-3 PANEL	120V-1Ø	24.0 AMPS	MMS	2#12, 1#12 (G)	3/4"C.
SP-1 ALARM	120V-1Ø	5.0 AMPS	MMS	2#12, 1#12 (G)	3/4"C.
SP-3 ALARM	120V-1Ø	5.0 AMPS	MMS	2#12, 1#12 (G)	3/4"C.
TP-1	120V-1Ø	1.0 AMPS	MMS	2#12, 1#12 (G)	3/4"C.
WH-1	208V-1Ø	4.5 KW	30/3/20	3#12, 1#12 (G)	3/4"C.
WH-2	480V-3Ø	126 KW	200/3/200	4#3/0, #6(G)	2-1/2"C.
HEAT TRACE	277V-1Ø	1500 W	MMS	2#12, 1#12 (G)	3/4"C.

"C" SERIES CONDUIT SCHEDULE

CONDUIT	SIZE	FEEDS	VOLTAGE	WIRES	CIRCUIT
C1	1"	EF-4/ EF-5	120V-1Ø	3 #8S & #10G - 1"C	MPG4-1
C2	1"	UH-8	277V-1Ø	-	MPG2-14
C3	1"	UH-10	480V-3Ø	-	MPG2-38,40,42
C4	1"	UH-13	480V-3Ø	4#10 + #10G	MPG2-13
C5	2"	COMM FEED	208V-3Ø	SEE RISER DIAGRAM	MAIN SWGR
C6	1-1/2"	SIG RM FEED	208V-3Ø	SEE RISER DIAGRAM	MAIN SWGR
C7	1"	EF-8	120V-1Ø	3#12 + #12G	-
C8	1"	AC6/CU6	208V-1Ø	2#12 + #12G	-
C9	1"	FS DAMPER	120V-1Ø	2#12 + #12G	-
C10	(10) 4"	MCC	480V-3Ø	SEE RISER DIAGRAM	MAIN SWGR
C11	4"	SPARE	-	PULLWIRE	-
C12	2-1/2"	SPARE	-	PULLWIRE	-
C13	2-1/2"	SPARE	-	PULLWIRE	-
C14	2-1/2"	HPG1	480V-3Ø	SEE RISER DIAGRAM	MAIN SWGR
C15	2-1/2"	HPG2	480V-3Ø	SEE RISER DIAGRAM	MAIN SWGR
C16	2-1/2"	MPG1	480V-3Ø	SEE RISER DIAGRAM	MAIN SWGR
C17	4"	SPARE	-	PULLWIRE	-
C18	2-1/2"	UH-9	-	PULLWIRE	-
C19	2-1/2"	SPARE	-	PULLWIRE	-
C20	4"	LPG1	480V-3Ø	SEE RISER DIAGRAM	MAIN SWGR
C21	1"	RECEPTS	120V-1Ø	-	MPG2-14
C22	1"	HEAT TRACE	277V-1Ø	-	MPG2-15
C23	1"	PRE-ACTION	-	-	EM
C24	1-1/2"	SIGN FEED	208V-3Ø	SEE RISER DIAGRAM	MAIN SWGR
C25	1"	HEAT TRACE	208V-1Ø	-	-
C26	-	CU4/AC4	208V-1Ø	-	MPG4-
C27	1"	CU5/AC5	208V-1Ø	-	MPG4-4,6
C28	1"	CU7/AC7	208V-1Ø	3#12 + #12G	MPG4-8,10
C29	1"	UH-11	208V-1Ø	3#10 + #10G	MPG2-32,34,36
C30	1"	CU3/AC3	208V-1Ø	2#10 + #10G	MPG4-14,16
C31	1"	FLOORBOX A	120V-1Ø	2#10 + #10G	-
C32	1"	CCTV 1,2,3	120V-1Ø	2#10 + #10G	-
C33	1"	SPARE	-	-	
C34	1"	MOTOR DOOR	-	-	-
C35	1"	MOTOR DOOR	-	-	MPG3-13
C36	1"	RECEPT	120V-1Ø	2#10 + #10G	MPG3-9
C37	1"	-	SPARE	-	-
C38	1"	VMS	120V-1Ø	2 #10S & #10G	
C39	1"	CCTV 9 & 13	120V-1Ø	2 #10S & #10G	
C40	1"	EF7	-	PULL WIRE	-
C41				-	
C42	1"	HEAT TRACE	277V-1Ø	2 #10S & #10G	MPG2-19
C43	-	SP3 CTL	-	-	NOT USED
C44	-	EPG1	-	-	NOT USED
C45	1"	UH-12	-		MPG2-26,28,30
C46	2"	PREACTION	-	PULL WIRE	-
C47	1"	FIRE ALARM	-	PULL WIRE	-
C48	1"	FIRE ALARM	-	PULL WIRE	-
C49	1"	FIRE ALARM	-	PULL WIRE	-

"C" SERIES CONDUIT SCHEDULE

CONDUIT	SIZE	FEEDS	VOLTAGE	WIRES	CIRCUIT
C50	1"	FIRE ALARM	-	PULL WIRE	-
C51	1"	FIRE ALARM	-	PULL WIRE	-
C52	1"	FIRE ALARM	-	PULL WIRE	-
C53	1"	FIRE ALARM	-	PULL WIRE	-
C54	1"	FIRE ALARM	-	PULL WIRE	-
C55	1"	FIRE ALARM	-	PULL WIRE	-
C56	1"	FIRE ALARM	-	PULL WIRE	-
C57	1"	FIRE ALARM	-	PULL WIRE	-
C58	1"	FIRE ALARM	-	PULL WIRE	-
C59	1"	FIRE ALARM	-	PULL WIRE	-
C60	1"	FIRE ALARM	-	PULL WIRE	-
C61	1"	FIRE ALARM	-	PULL WIRE	-
C62	NOT USED	NOT USED	-	NOT USED	-
C63	NOT USED	NOT USED	-	NOT USED	-
C64	1"	CR POWER	-	PULL WIRE	-
C65	1"	CR SIGNAL	-	PULL WIRE	-

"G" SERIES CONDUIT SCHEDULE

CONDUIT	SIZE	FEEDS	VOLTAGE	WIRES	CIRCUIT
G1	1"	PH1	N/A	PULLWIRE	N/A
G2	1"	PH2	N/A	PULLWIRE	N/A
G3	1"	PH3	N/A	PULLWIRE	N/A
G4	1"	PH4	N/A	PULLWIRE	N/A
G5	1"	PH5	N/A	PULLWIRE	N/A
G6	1"	PH6	N/A	PULLWIRE	N/A
G7	1"	PH7	N/A	PULLWIRE	N/A
G8	1"	PH8	N/A	PULLWIRE	N/A
G9	1"	PH9	N/A	PULLWIRE	N/A
G10	1"	PH10	N/A	PULLWIRE	N/A
G11	1"	EL PH 1 + 2	N/A	PULLWIRE	N/A
G12	1"	VMS 2	N/A	PULLWIRE	N/A
G13	1"	EM PH 1	N/A	PULLWIRE	N/A
G14	1"	ID SIGN	N/A	PULLWIRE	N/A
G15	1"	RTU 2	N/A	PULLWIRE	N/A
G16	1"	RTU 1	N/A	PULLWIRE	N/A
G17	1"	EM PH 3	N/A	PULLWIRE	N/A
G18	NOT USED	-	-	-	-
G19	1"	CCTV 9 & 13	N/A	PULLWIRE	N/A
G20	NOT USED	-	-	-	-
G21	3"	PB2	N/A	PULLWIRE	N/A
G22	3"	PB5	N/A	PULLWIRE	N/A
G23	3"	PB8	N/A	PULLWIRE	N/A
G24	3"	PB10	N/A	PULLWIRE	N/A
G25	1"	CCTV 12	N/A	PULLWIRE	N/A
G26	NOT USED	-	-	-	-
G27	NOT USED	-	-	-	-

"G" SERIES CONDUIT SCHEDULE

CONDUIT	SIZE	FEEDS	VOLTAGE	WIRES	CIRCUIT
G28	NOT USED	-	-	-	-
G29	NOT USED	-	-	-	-
G30	1"	PASS PH3	N/A	PULLWIRE	N/A
G31	1"	CCTV 5	N/A	PULLWIRE	N/A
G32	1"	CCTV 7	N/A	PULLWIRE	N/A
G33	1"	CCTV 1, 2, 3	N/A	PULLWIRE	N/A
G34	1"	CCTV 4	N/A	PULLWIRE	N/A
G35	2-1/2"	SP 7,8,9,10	N/A	PULLWIRE	N/A
G36	1"	EM PH 2	N/A	PULLWIRE	N/A
G37	1"	PH 11	N/A	PULLWIRE	N/A
G38	NOT USED	-	-	-	-
G39	1"	SP #6	N/A	PULLWIRE	N/A
G40	1"	SP #5	N/A	PULLWIRE	N/A
G41	1"	SP #2	N/A	PULLWIRE	N/A
G42	1"	SP #1	N/A	PULLWIRE	N/A
G43	1"	SP #3	N/A	PULLWIRE	N/A
G44	1"	CCTV #6	N/A	PULLWIRE	N/A
G45	1"	SP #4	N/A	PULLWIRE	N/A
G46	1"	MIC #1	N/A	PULLWIRE	N/A
G47	–	NOT USED	N/A	–	N/A
G48	1"	MIC #2	N/A	PULLWIRE	N/A

ELEVATOR/ESCALATOR SCHEDULE

ELEV 1	480V-3Ø	75 HP	DISCONNECT	200/3/200	4#3/0 AWG + #6G -2 1/2" C
ELEV 2	480V-3Ø	75 HP	DISCONNECT	200/3/200	4#3/0 AWG + #6G -2 1/2" C
ESC	480V-3Ø	25 HP	DISCONNECT	100/3/70	4#3 AWG + 8 (G) -2" C

The light /motion Collaborative
EDGE studio and Pfaffmann & Associates

EDGE studio
5411 Penn Avenue
Pittsburgh, PA 15206
tel: 412.345.5006
fax: 412.345.5006

Pfaffmann & Associates
203 Fourth Avenue
Pittsburgh, PA 15222
tel: 412.471.2470
fax: 412.471.2472

Allen & Shariff
ENGINEERING
700 River Avenue, Suite 333
Pittsburgh, PA 15212
Tel: 412.322.9280
Fax: 412.322.9281

NO.	DATE	DESCRIPTION

REVISIONS

THE PREPARATION OF THIS DOCUMENT HAS BEEN FINANCED IN PART THROUGH A GRANT FROM THE FEDERAL TRANSIT ADMINISTRATION, U.S. DEPARTMENT OF TRANSPORTATION, UNDER THE URBAN MASS TRANSPORTATION ACT OF 1964, AS AMENDED, FOR THE PORT AUTHORITY OF ALLEGHENY COUNTY, PENNSYLVANIA.

COMMONWEALTH OF PENNSYLVANIA REGISTERED PROFESSIONAL Anthony E. Molinaro Jr. 41354-E

SIGNATURE

DMJM HARRIS | AECOM
FOUR GATEWAY CENTER
20TH FLOOR
PITTSBURGH, PA. 15222

APPROVED 4/29/08
DATE

DESIGNED	MTY
DRAWN	MTY
CHECKED	AEM
IN CHARGE	AEM
DATE APRIL 29, 2008	
SCALE	NOT TO SCALE

PORT AUTHORITY OF ALLEGHENY COUNTY
PITTSBURGH PENNSYLVANIA

NORTH SHORE CONNECTOR
GATEWAY STATION SHELL
ELECTRICAL CONDUIT AND MECHANICAL SCHEDULES

Port Authority connecting people to life

CONTRACT NO. NSC-010E
DWG. NO. EL 005
SHT. 207

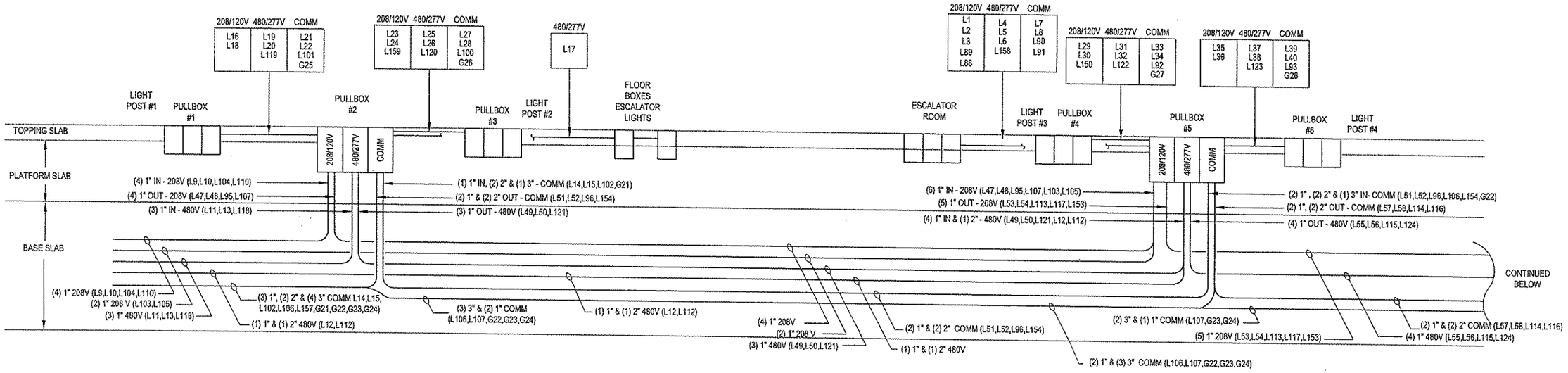

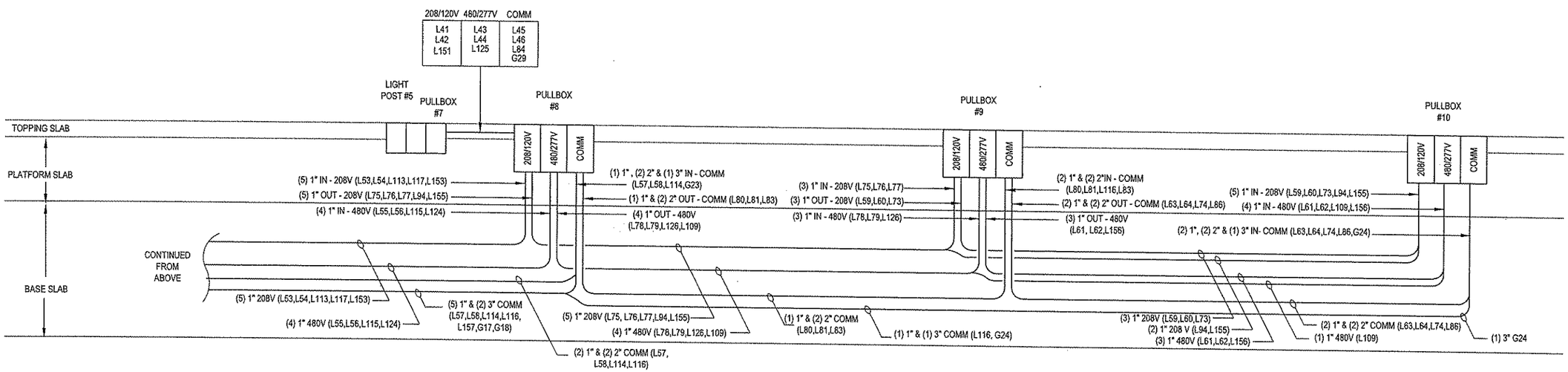

CONDUIT EMBEDMENTS AND PULL BOX SCHEMATIC (1)

The light / motion Collaborative
EDGE studio and Perfmann & Associates

EDGE studio
5411 Penn Avenue
Pittsburgh, PA 15206
tel: 412.945.5005
fax: 412.945.5006

Perfmann & Associates
223 Fourth Avenue
Pittsburgh, PA 15222
tel: 412.471.2470
fax: 412.471.2472

Allen & Shariff
ENGINEERING
700 River Avenue, Suite 333
Pittsburgh, PA 15212
Tel: 412.322.9280
Fax: 412.322.9281

NO.	DATE	DESCRIPTION

REVISIONS

THE PREPARATION OF THIS DOCUMENT HAS BEEN FINANCED IN PART THROUGH A GRANT FROM THE FEDERAL TRANSIT ADMINISTRATION, U. S. DEPARTMENT OF TRANSPORTATION, UNDER THE URBAN MASS TRANSPORTATION ACT OF 1964, AS AMENDED, FOR THE PORT AUTHORITY OF ALLEGHENY COUNTY, PENNSYLVANIA.

COMMONWEALTH OF PENNSYLVANIA REGISTERED PROFESSIONAL ENGINEER Anthony E. Mollinger 41354-E
SIGNATURE

DMJM HARRIS | AECOM
FOUR GATEWAY CENTER
20TH FLOOR
PITTSBURGH, PA. 15222

David P. Harris 4/29/08
APPROVED DATE

DESIGNED	MTY
DRAWN	MTY
CHECKED	AEM
IN CHARGE	AEM
DATE APRIL 29, 2008	
SCALE NOT TO SCALE	

PORT AUTHORITY OF ALLEGHENY COUNTY
PITTSBURGH PENNSYLVANIA

NORTH SHORE CONNECTOR
GATEWAY STATION SHELL
CONDUIT EMBEDMENTS AND PULL BOX SCHEMATIC

Port Authority
connecting people to life

CONTRACT NO. NSC-010E
DWG. NO. EL 007 SHT. 208

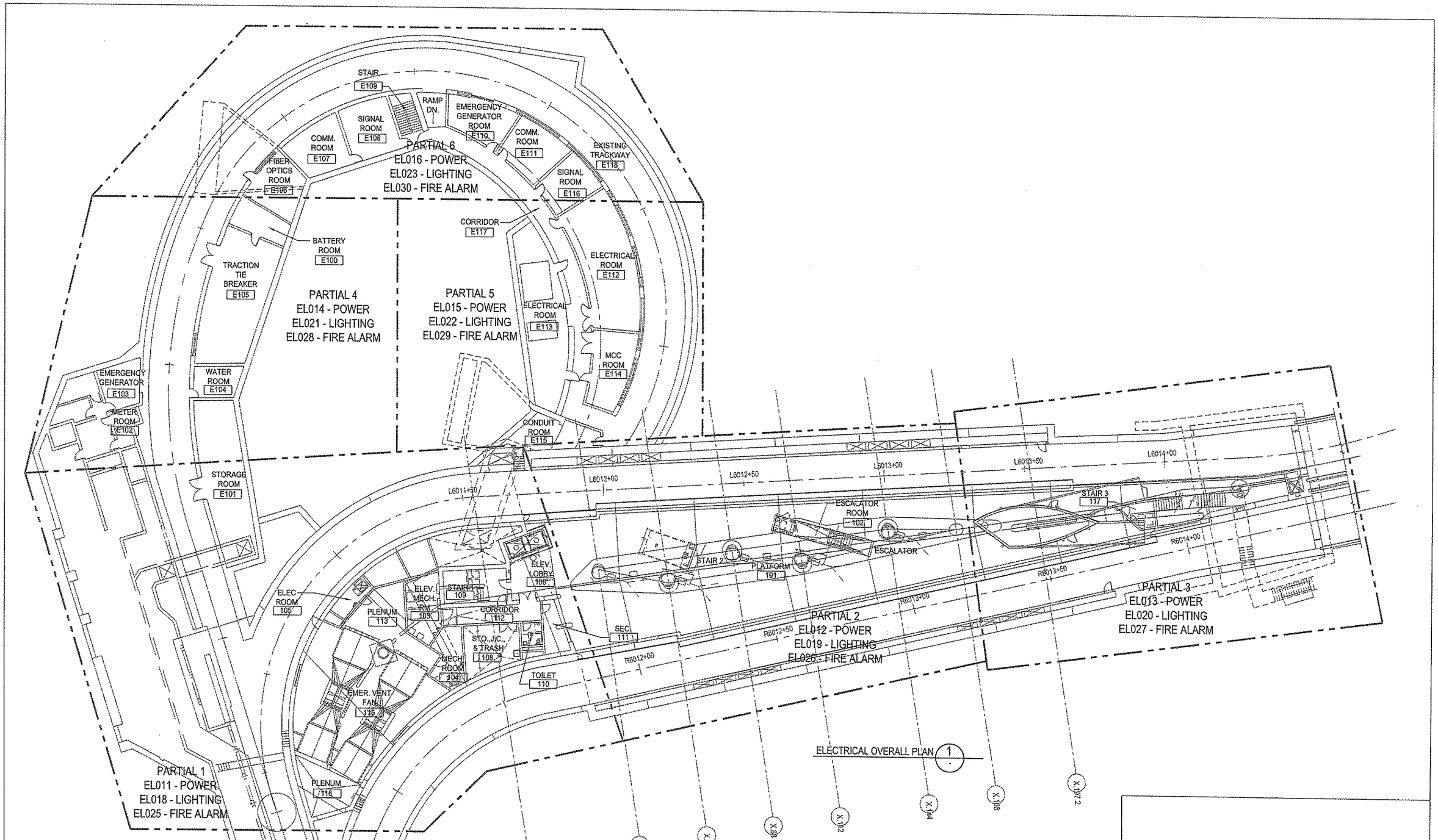

The light /motion Collaborative
EDGE studio and Pfaffmann & Associates

EDGE studio
5411 Penn Avenue
Pittsburgh, PA 15206
tel: 412.345.5006
fax: 412.345.5006

Pfaffmann & Associates
225 Fourth Avenue
Pittsburgh, PA 15222
tel: 412.471.2470
fax: 412.471.2472

Allen & Shariff
ENGINEERING
700 River Avenue, Suite 333
Pittsburgh, PA 15212
Tel: 412.322.9280
Fax: 412.322.9281

NO.	DATE	DESCRIPTION

REVISIONS

THE PREPARATION OF THIS DOCUMENT HAS BEEN FINANCED IN PART THROUGH A GRANT FROM THE FEDERAL TRANSIT ADMINISTRATION, U.S. DEPARTMENT OF TRANSPORTATION, UNDER THE URBAN MASS TRANSPORTATION ACT OF 1964, AS AMENDED, FOR THE PORT AUTHORITY OF ALLEGHENY COUNTY, PENNSYLVANIA.

COMMONWEALTH OF PENNSYLVANIA REGISTERED PROFESSIONAL ENGINEER Anthony E. Mollica Jr. 41354-E

SIGNATURE

DMJM HARRIS | AECOM
FOUR GATEWAY CENTER
20TH FLOOR
PITTSBURGH, PA. 15222

APPROVED — DATE 4/29/08

DESIGNED	MTY
DRAWN	MTY
CHECKED	AEM
IN CHARGE	AEM
DATE APRIL 29, 2008	
SCALE 1/16"=1'-0"	

16' 8' 0 16'

PORT AUTHORITY OF ALLEGHENY COUNTY
PITTSBURGH PENNSYLVANIA

NORTH SHORE CONNECTOR
GATEWAY STATION SHELL

ELECTRICAL PLAN - PLATFORM LEVEL
OVERALL

Port Authority
connecting people to life

CONTRACT NO. NSC-010E

DWG. NO. EL 010 SHT. 211

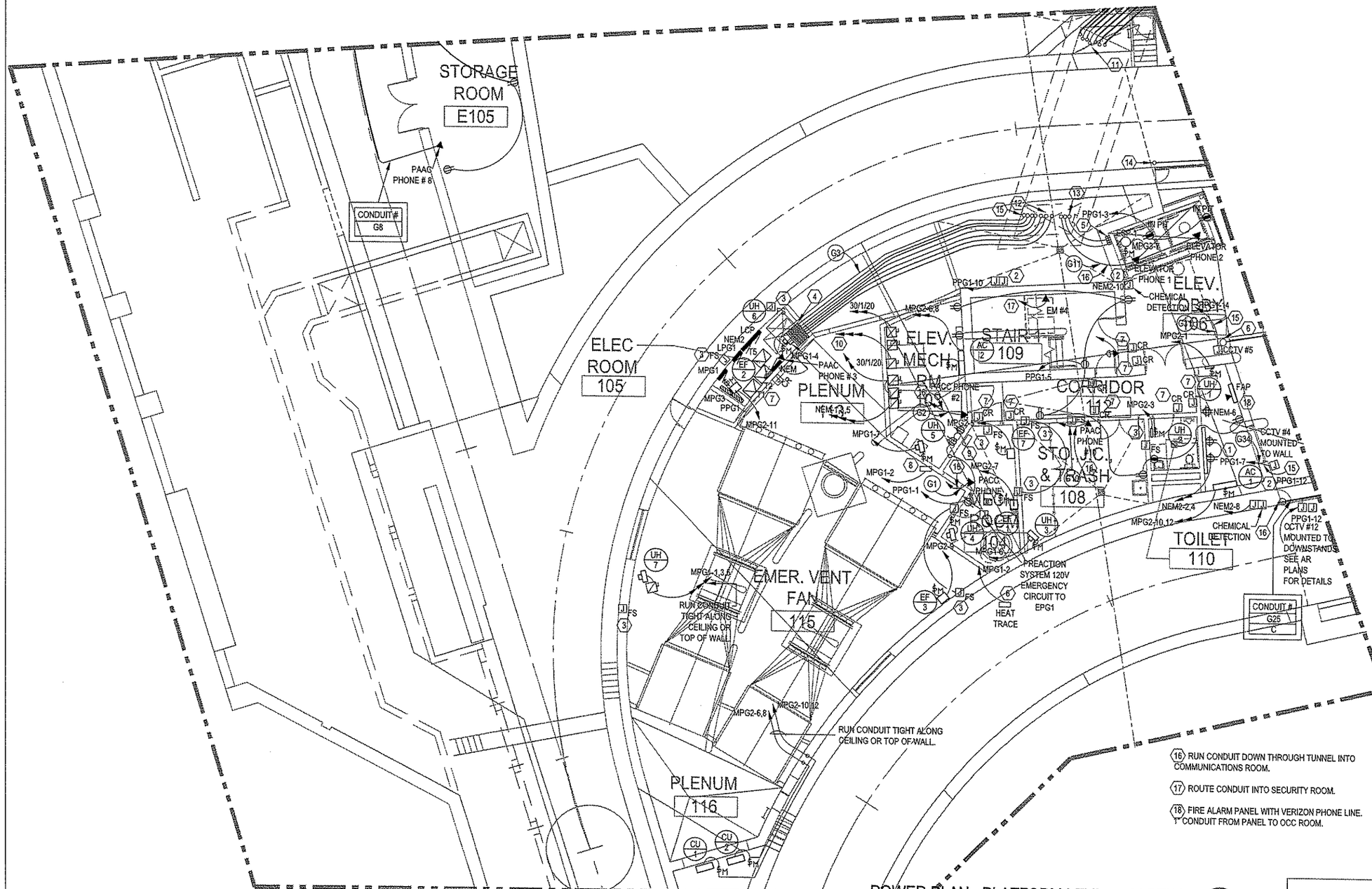

GENERAL NOTES:

1. WHERE WIRE SIZE IN NOT INDICATED, #12 AWG MINIMUM SHALL BE USED FOR CIRCUITS LESS THAN 100 FEET IN LENGTH, #10 AWG SHALL BE USED FOR CIRCUITS FROM 100 TO 150 FEET IN LENGTH AND #8 AWG SHALL BE USED FOR CIRCUITS FROM 150 TO 250 IN LENGTH.

2. FIRE STOP ALL FLOOR AND WALL PENETRATIONS AS REQUIRED BY CODE.

3. THIS CONTRACTOR IS RESPONSIBLE FOR ALL CONDUIT AND JUNCTION BOXES FOR ALL COMMUNICATIONS DEVICES, FIRE ALARM DEVICES AND SECURITY DEVICES.

4. SEE MECHANICAL SCHEDULE FOR EQUIPMENT CONNECTIONS AND WIRE SIZES. THE EC SHALL VERIFY ALL MECHANICAL EQUIPMENT SPECIFICATIONS (VOLTAGE, HORSEPOWER, KILOWATTS, CONNECTION, ETC) PRIOR TO ROUGH-IN OR PLACING FINAL PURCHASE ORDERS FOR ANY ELECTRICAL DEVICES.

5. ALL PAAC PHONES AND EM PHONES SHALL BE MOUNTED AT 48" AFF.

CODED NOTES:

(1) ELECTRICAL CONTRACTOR SHALL PROVIDE (2) SHEETS OF 3/4" 4X8 PLYWOOD. PLYWOOD SHALL BE PAINTED, TREATED, AND SECURELY FASTENED TO WALL.

(2) PROVIDE DOUBLE GANG JUNCTION BOX FOR CHEMICAL DETECTION DEVICE. JUNCTION BOX TO BE ROUGHED IN AT 10'-0" ABOVE FINISHED FLOOR. COORDINATE EXACT LOACTION WITH PORT AUTHORITY SECURITY COORDINATOR. IN ADDITION TO POWER CIRCUIT, ELECTRICAL CONTRACTOR SHALL RUN 1" CONDUIT WITH PULL STRING TO ELECTRICAL ROOM 105 AND FROM ELECTRIC ROOM TO COMMUNICATION ROOM E116.

(3) PROVIDE 20A CONNECTION TO FIRE/SMOKE DAMPER. DAMPER PROVIDED AND INSTALLED BY THE MECHANICAL CONTRACTOR, WIRED BY ELECTRICAL CONTRACTOR. CIRCUIT TO NEM2-5.

(4) CONDUITS TURN UP AND INTO ELECTRICAL ROOM AT THIS POINT.

(5) EXISTING CONDUITS RUN UP TO REACH CONCOURSE LEVEL. SEE DRAWING EL017 FOR QUANTITY AND SIZE.

(6) ROUTE POWER CONDUIT FROM THIS POINT TO PANELS IN ELECTRIC ROOM 105. ROUTE COMMUNICATIONS CONDUIT WITH PULL WIRE INTO SECURITY ROOM 111.

(7) PROVIDE RECESSED DOUBLE GANG JUNCTION BOX FOR FUTURE CARD READER. PROVIDE 1" CONDUIT WITH PULLSTRING STUBBED INTO SECURITY ROOM.

(8) ELECTRICAL CONTRACTOR SHALL PROVIDE A 30A, 277V CONNECTION TO HEAT TRACE CONTROLLER (PROVIDED BY OTHERS). ELECTRICAL CONTRACTOR SHALL RUN 2 #10 + #10G - 1"C TO DESIGNATED CIRCUIT.

(9) E.C. SHALL PROVIDE CONNECTION TO SP-1 CONTROL PANEL. CIRCUIT SHALL BE

(10) E.C. SHALL RUN CIRCUIT BACK TO NEW MAIN SWITCH GEAR.

(11) CONDUITS TURN DOWN INTO TUNNEL AT THIS POINT.

(12) CONDUITS TURN UP OUT OF TUNNEL AT THIS POINT.

(13) RUN CONDUITS FROM THIS POINT THRU TUNNEL.

(14) CONDUITS C38 AND G12 RUN FROM THIS POINT CONCEALED TO TUNNEL. C39 RUNS FROM THIS POINT CONCEALED TO ELEC ROOM 105.

(15) ALL COMMUNICATION CONDUIT AT THIS POINT RUN INTO COMMUNICATIONS ROOM THRU TUNNEL.

(16) RUN CONDUIT DOWN THROUGH TUNNEL INTO COMMUNICATIONS ROOM.

(17) ROUTE CONDUIT INTO SECURITY ROOM.

(18) FIRE ALARM PANEL WITH VERIZON PHONE LINE. 1" CONDUIT FROM PANEL TO OCC ROOM.

POWER PLAN - PLATFORM LEVEL - PARTIAL 1 (1)

The light /motion Collaborative
EDGE studio and Pfaffmann & Associates

EDGE studio
5411 Penn Avenue
Pittsburgh, PA 15206
tel: 412.945.6005
fax: 412.945.6006

Pfaffmann & Associates
220 Fourth Avenue
Pittsburgh, PA 15222
tel: 412.471.2470
fax: 412.471.2472

Allen & Shariff
ENGINEERING
700 River Avenue, Suite 333
Pittsburgh, PA 15212
Tel: 412.322.9280
Fax: 412.322.9281

NO.	DATE	DESCRIPTION

REVISIONS

THE PREPARATION OF THIS DOCUMENT HAS BEEN FINANCED IN PART THROUGH A GRANT FROM THE FEDERAL TRANSIT ADMINISTRATION, U.S. DEPARTMENT OF TRANSPORTATION, UNDER THE URBAN MASS TRANSPORTATION ACT OF 1964, AS AMENDED, FOR THE PORT AUTHORITY OF ALLEGHENY COUNTY, PENNSYLVANIA.

COMMONWEALTH OF PENNSYLVANIA REGISTERED PROFESSIONAL Anthony E. Mallorca Jr. Project Manager 41354-E

SIGNATURE

DMJM HARRIS | AECOM
FOUR GATEWAY CENTER
20TH FLOOR
PITTSBURGH, PA. 15222

APPROVED — DATE 4/29/08

DESIGNED	MTY
DRAWN	MTY
CHECKED	AEM
IN CHARGE	AEM
DATE APRIL 29, 2008	
SCALE 1/8"=1'-0"	

8' 4' 0 8'

PORT AUTHORITY OF ALLEGHENY COUNTY
PITTSBURGH PENNSYLVANIA

NORTH SHORE CONNECTOR
GATEWAY STATION SHELL

POWER PLAN - PLATFORM LEVEL
PARTIAL 1

Port Authority
connecting people to life

CONTRACT NO. NSC-010E

DWG. NO. EL 011 SHT. 212

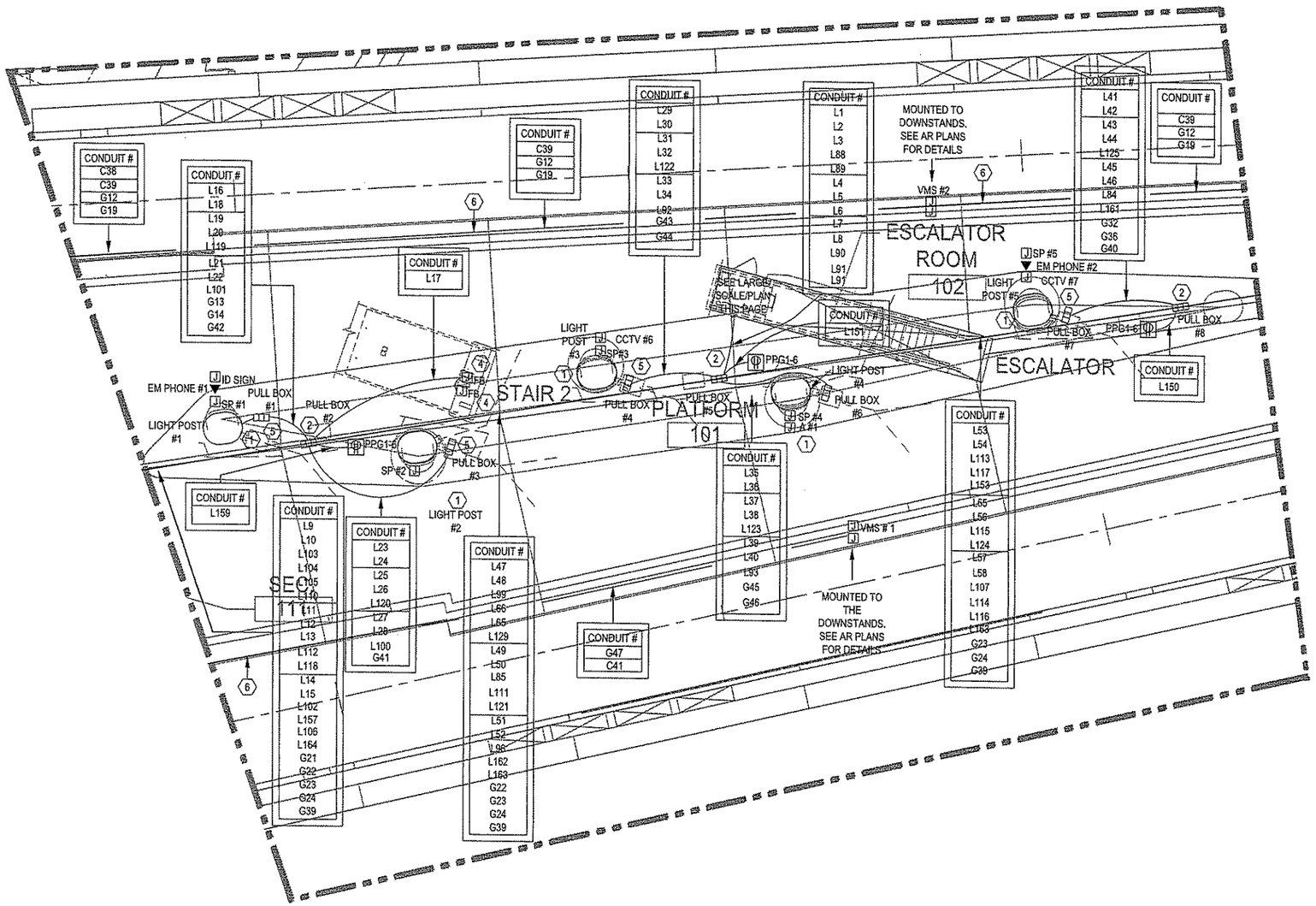

POWER PLAN - PLATFORM LEVEL - PARTIAL 2 (1 -)

GENERAL NOTES:

1. WHERE WIRE SIZE IN NOT INDICATED, #12 AWG MINIMUM SHALL BE USED FOR CIRCUITS LESS THAN 100 FEET IN LENGTH, #10 AWG SHALL BE USED FOR CIRCUITS FROM 100 TO 150 FEET IN LENGTH AND #8 AWG SHALL BE USED FOR CIRCUITS FROM 150 TO 250 IN LENGTH.

2. FIRE STOP ALL FLOOR AND WALL PENETRATIONS AS REQUIRED BY CODE.

3. THIS CONTRACTOR IS RESPONSIBLE FOR ALL CONDUIT AND JUNCTION BOXES FOR ALL COMMUNICATIONS DEVICES, FIRE ALARM DEVICES AND SECURITY DEVICES.

4. SEE MECHANICAL SCHEDULE FOR EQUIPMENT CONNECTIONS AND WIRE SIZES. THE EC SHALL VERIFY ALL MECHANICAL EQUIPMENT SPECIFICATIONS (VOLTAGE, HORSEPOWER, KILOWATTS, CONNECTION, ETC) PRIOR TO ROUGH-IN OR PLACING FINAL PURCHASE ORDERS FOR ANY ELECTRICAL DEVICES.

5. COMMUNICATION CONDUIT FOR ALL CAMERAS, VMS, NOISE SENSORS, SPEAKERS AND PHONES SHALL BE RUN FROM DEVICE TO COMMUNICATIONS ROOM. CONDUIT SHALL BE PROVIDED WITH PULL STRING. CONDUIT CAN NOT HAVE MORE THE 360° WORTH OF BENDS WITHOUT A PULL BOX FOR ACCESS. ALL CONDUIT SHALL BE RUN CONCEALED.

6. SEE ARCHITECTURAL PLANS FOR ALL MOUNTING DETAILS.

7. ALL PAAC PHONES AND EM PHONES SHALL BE MOUNTED AT 48" AFF.

CODED NOTES:

(1) ELECTRICAL CONTRACTOR SHALL PROVIDE BACKBOXES FOR DEVICES AS SHOWN ON LIGHT POLE. COORDINATE MOUNTING OF BACKBOXES WITH ARCHITECTURAL LIGHT POST DETAIL SHEET (SEE AR SERIES). EC SHALL PROVIDE CONDUIT, WIRE (OR PULLSTRING) AND ALL CONNECTIONS AND MOUNTINGS OF ALL DEVICES SHOWN.

(2) ELECTRICAL CONTRACTOR SHALL PROVIDE (3) RECESSED PULL BOXES. PULL BOXES SHALL BE QUAZITE 8"W X 8" X 18"L. PULL BOXES SHALL BE LOCATED AS PER DIMENSIONS AR DRAWING DETAILS.

(3) ELECTRICAL CONTRACTOR SHALL PROVIDE (1) DOUBLE GANG JUNCTION BOX AND (1) SINGLE GANG JUNCTION BOX FOR SECURITY CAMERAS (BY OTHERS). RUN POWER TO SINGLE JUNCTION BOX. RUN 1"C WITH PULL WIRE FROM DOUBLE GANG BOX BACK TO SECURITY ROOM.

(4) FLOOR JUNCTION BOX FOR CONNECTION TO ESCALATOR LIGHTS. EC SHALL PROVIDE THE FLOOR BOX AND THE CONNECTION TO ESCALATOR LIGHTS.

(5) EC SHALL PROVIDE FLOOR BOX AT BASE OF LIGHT POLE FOR CONNECTION TO POLE MOUNTED DEVICES. SEE AR DRAWING FOR DETAILS.

(6) CONDUIT SHALL BE MOUNTED CONCEALED ALONG TOP OF DOWNSTANDS.

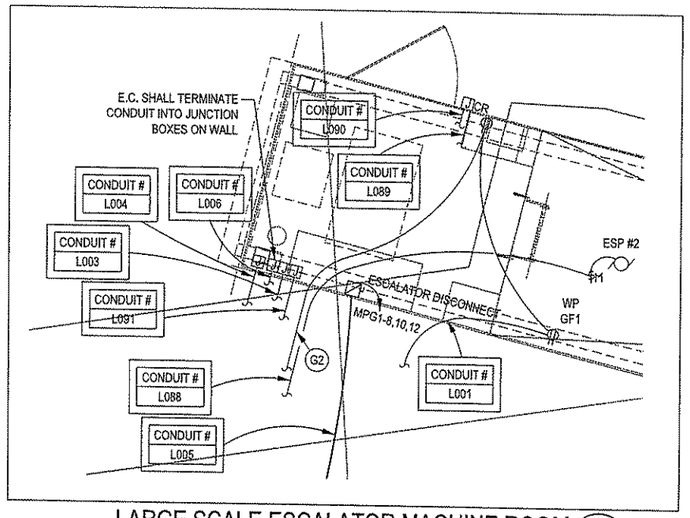

LARGE SCALE ESCALATOR MACHINE ROOM (2 -)

SCALE: 1/2" = 1'-0"

The light /motion Collaborative
EDGE studio and Pfaffmann & Associates

EDGE studio
5411 Penn Avenue
Pittsburgh, PA 15206
tel: 412.345.5005
fax: 412.345.5006

Pfaffmann & Associates
223 Fourth Avenue
Pittsburgh, PA 15222
tel: 412.471.2470
fax: 412.471.2472

Allen & Shariff
ENGINEERING
700 River Avenue, Suite 333
Pittsburgh, PA 15212
Tel: 412.322.9280
Fax: 412.322.9281

NO.	DATE	DESCRIPTION

REVISIONS

THE PREPARATION OF THIS DOCUMENT HAS BEEN FINANCED IN PART THROUGH A GRANT FROM THE FEDERAL TRANSIT ADMINISTRATION, U.S. DEPARTMENT OF TRANSPORTATION, UNDER THE URBAN MASS TRANSPORTATION ACT OF 1964, AS AMENDED, FOR THE PORT AUTHORITY OF ALLEGHENY COUNTY, PENNSYLVANIA.

COMMONWEALTH OF PENNSYLVANIA REGISTERED PROFESSIONAL Anthony F. Molinaro Jr. ENGINEER 41354-E

SIGNATURE

DMJM HARRIS | AECOM
FOUR GATEWAY CENTER
20TH FLOOR
PITTSBURGH, PA. 15222

APPROVED — DATE 4/29/08

DESIGNED	MTY
DRAWN	MTY
CHECKED	AEM
IN CHARGE	AEM
DATE APRIL 29, 2008	
SCALE 1/8"=1'-0"	

8' 4' 0 8'

PORT AUTHORITY OF ALLEGHENY COUNTY
PITTSBURGH PENNSYLVANIA

NORTH SHORE CONNECTOR
GATEWAY STATION SHELL
POWER PLAN - PLATFORM LEVEL
PARTIAL 2

Port Authority connecting people to life

CONTRACT NO. NSC-010E
DWG. NO. EL 012 SHT. 213

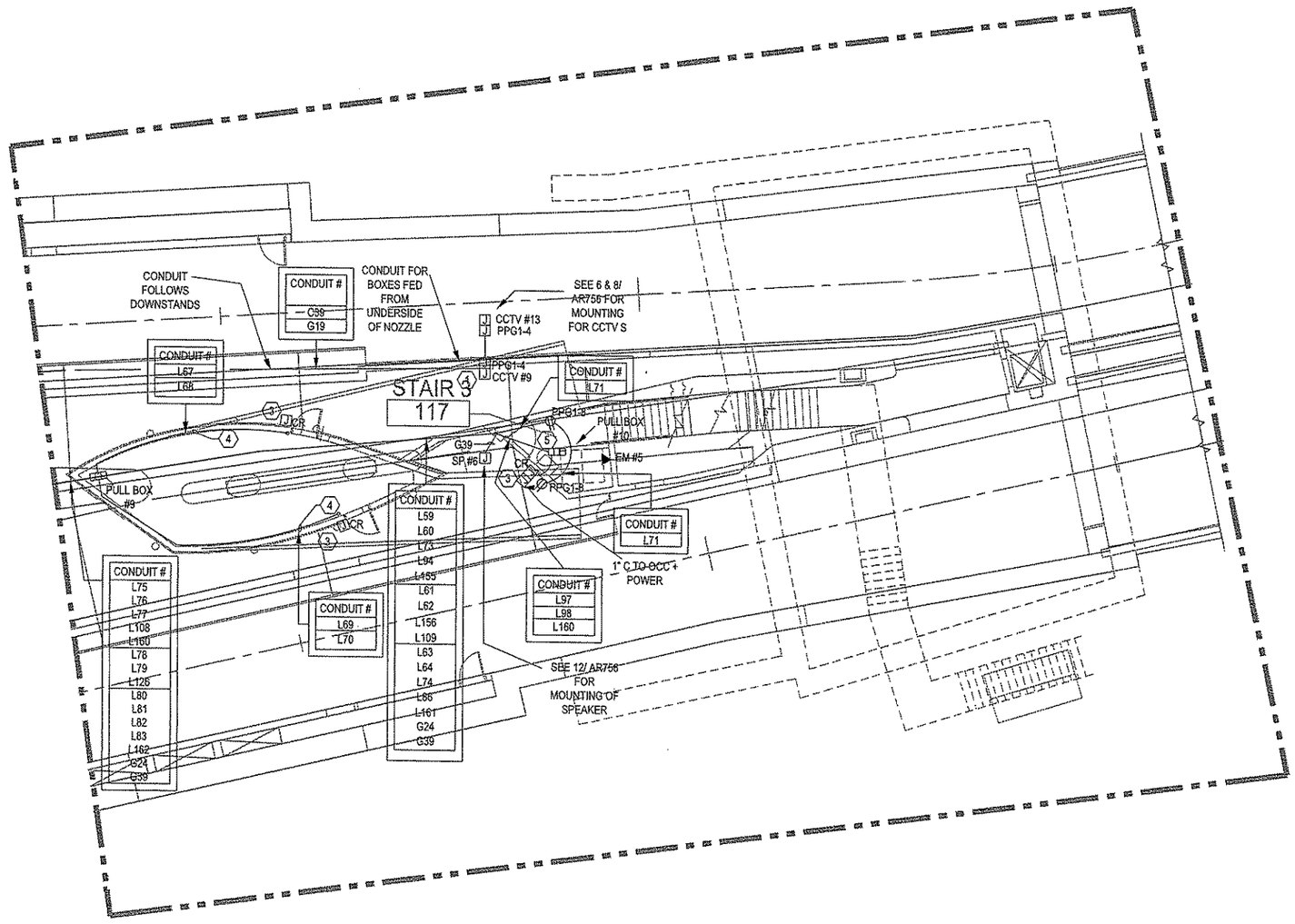

GENERAL NOTES:

1. WHERE WIRE SIZE IN NOT INDICATED, #12 AWG MINIMUM SHALL BE USED FOR CIRCUITS LESS THAN 100 FEET IN LENGTH, #10 AWG SHALL BE USED FOR CIRCUITS FROM 100 TO 150 FEET IN LENGTH AND #8 AWG SHALL BE USED FOR CIRCUITS FROM 150 TO 250 IN LENGTH.

2. FIRE STOP ALL FLOOR AND WALL PENETRATIONS AS REQUIRED BY CODE.

3. THIS CONTRACTOR IS RESPONSIBLE FOR ALL CONDUIT AND JUNCTION BOXES FOR ALL COMMUNICATIONS DEVICES, FIRE ALARM DEVICES AND SECURITY DEVICES.

4. SEE MECHANICAL SCHEDULE FOR EQUIPMENT CONNECTIONS AND WIRE SIZES. THE EC SHALL VERIFY ALL MECHANICAL EQUIPMENT SPECIFICATIONS (VOLTAGE, HORSEPOWER, KILOWATTS, CONNECTION, ETC) PRIOR TO ROUGH-IN OR PLACING FINAL PURCHASE ORDERS FOR ANY ELECTRICAL DEVICES.

5. ALL PAAC PHONES AND EM PHONES SHALL BE MOUNTED AT 48" AFF.

CODED NOTES:

(1) ELECTRICAL CONTRACTOR SHALL PROVIDE (1) DOUBLE GANG JUNCTION BOX AND (1) SINGLE GANG JUNCTION BOX FOR SECURITY CAMERAS (BY OTHERS). RUN POWER TO SINGLE JUNCTION BOX. RUN 1"C WITH PULL WIRE FROM DOUBLE GANG BOX BACK TO SECURITY ROOM.

(2) NOT USED.

(3) PROVIDE (1) DOUBLE GANG JUNCTION BOX AND (1) SINGLE GANG JUNCTION BOX FOR FUTURE CARD READER SYSTEM. BOX SHALL BE ADJACENT TO DOOR AND MOUNTED AT HEIGHT INDICATED ON ARCHITECTURAL PLANS.

(4) CONDUIT SURFACE MOUNTED ON INSIDE OF WALL.

(5) EC SHALL PROVIDE FLOOR BOX FOR CONNECTION TO DEVICES IN THIS AREA. SEE AR DRAWING FOR DETAILS.

POWER PLAN - PLATFORM LEVEL - PARTIAL 3 (1 / -)

The light /motion Collaborative
EDGE studio and Pfeifmann & Associates

EDGE studio
5411 Penn Avenue
Pittsburgh, PA 15206
tel: 412.243.5000
fax: 412.243.5006

Pfeifmann & Associates
320 Fourth Avenue
Pittsburgh, PA 15222
tel: 412.471.2410
fax: 412.471.2472

Allen & Shariff
ENGINEERING
700 River Avenue, Suite 333
Pittsburgh, PA 15212
Tel: 412.322.9280
Fax: 412.322.9281

NO.	DATE	DESCRIPTION

REVISIONS

THE PREPARATION OF THIS DOCUMENT HAS BEEN FINANCED IN PART THROUGH A GRANT FROM THE FEDERAL TRANSIT ADMINISTRATION, U.S. DEPARTMENT OF TRANSPORTATION, UNDER THE URBAN MASS TRANSPORTATION ACT OF 1964, AS AMENDED, FOR THE PORT AUTHORITY OF ALLEGHENY COUNTY, PENNSYLVANIA.

COMMONWEALTH OF PENNSYLVANIA REGISTERED PROFESSIONAL ENGINEER Anthony E. Mollica Jr. 41354-E

SIGNATURE

DMJM HARRIS | AECOM
FOUR GATEWAY CENTER
20TH FLOOR
PITTSBURGH, PA. 15222

APPROVED — DATE 4/29/08

DESIGNED	MTY
DRAWN	MTY
CHECKED	AEM
IN CHARGE	AEM
DATE APRIL 29, 2008	
SCALE 1/8"=1'-0"	

8' 4' 0 8'

PORT AUTHORITY OF ALLEGHENY COUNTY
PITTSBURGH PENNSYLVANIA

NORTH SHORE CONNECTOR
GATEWAY STATION SHELL
POWER PLAN - PLATFORM LEVEL
PARTIAL 3

Port Authority
connecting people to life

CONTRACT NO. NSC-010E

DWG. NO. EL 013 SHT. 214

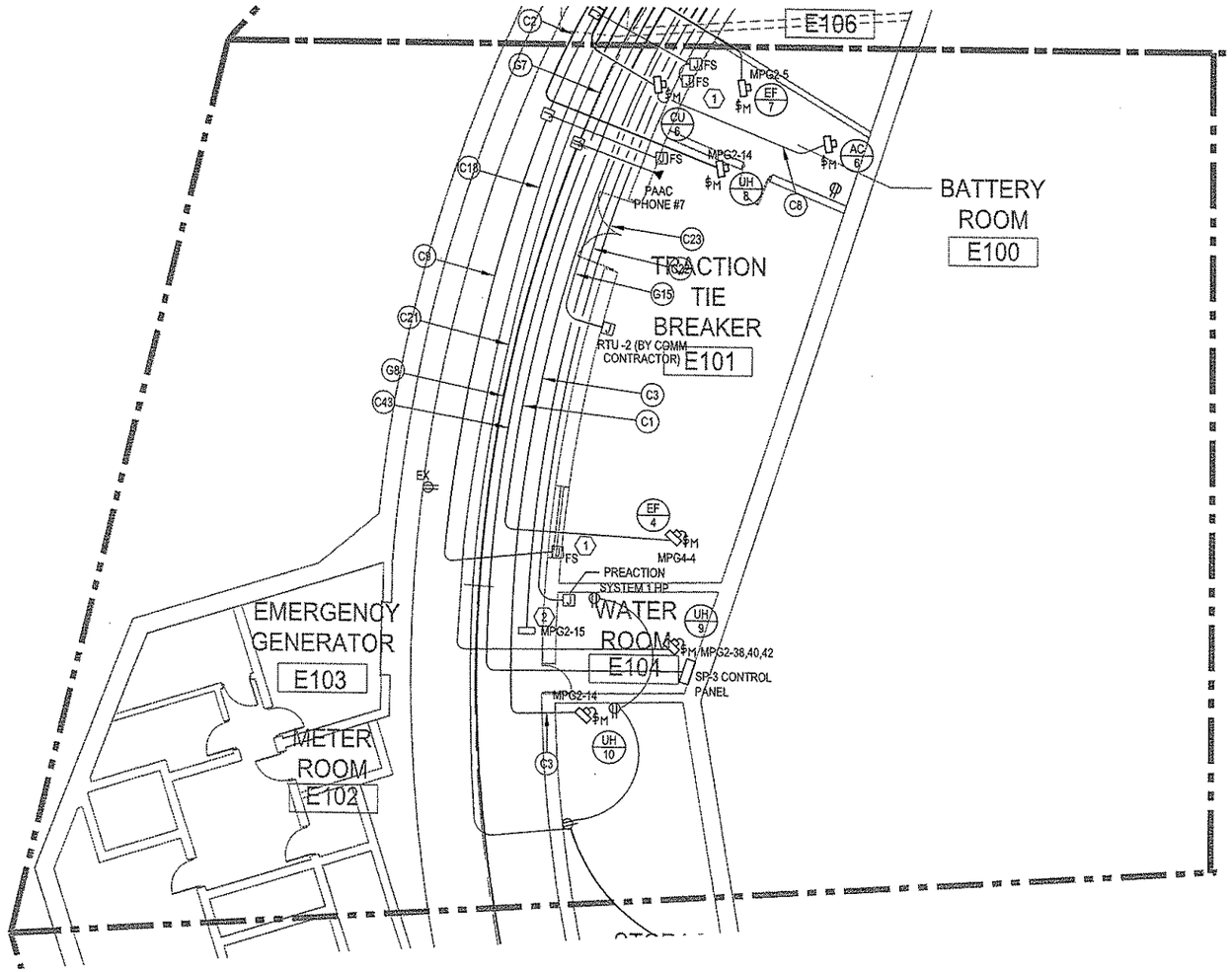

GENERAL NOTES:

1. WHERE WIRE SIZE IN NOT INDICATED, #12 AWG MINIMUM SHALL BE USED FOR CIRCUITS LESS THAN 100 FEET IN LENGTH, #10 AWG SHALL BE USED FOR CIRCUITS FROM 100 TO 150 FEET IN LENGTH AND #8 AWG SHALL BE USED FOR CIRCUITS FROM 150 TO 250 IN LENGTH.

2. FIRE STOP ALL FLOOR AND WALL PENETRATIONS AS REQUIRED BY CODE.

3. THIS CONTRACTOR IS RESPONSIBLE FOR ALL CONDUIT AND JUNCTION BOXES FOR ALL COMMUNICATIONS DEVICES, FIRE ALARM DEVICES AND SECURITY DEVICES.

4. SEE MECHANICAL SCHEDULE FOR EQUIPMENT CONNECTIONS AND WIRE SIZES. THE EC SHALL VERIFY ALL MECHANICAL EQUIPMENT SPECIFICATIONS (VOLTAGE, HORSEPOWER, KILOWATTS, CONNECTION, ETC) PRIOR TO ROUGH-IN OR PLACING FINAL PURCHASE ORDERS FOR ANY ELECTRICAL DEVICES.

5. ALL PAAC PHONES AND EM PHONES SHALL BE MOUNTED AT 48" AFF.

CODED NOTES:

(1) PROVIDE 20A CONNECTION TO FIRE/SMOKE DAMPER. DAMPER PROVIDED AND INSTALLED BY MECHANICAL CONTRACTOR, WIRED BY ELECTRICAL CONTRACTOR. CIRCUIT TO MPGH-2.

(2) ELECTRICAL CONTRACTOR SHALL PROVIDE A 30A, 277V CONNECTION TO HEAT TRACE CONTROLLER (PROVIDED BY OTHERS). ELECTRICAL CONTRACTOR SHALL RUN 2 #10 + #10G - 1#C. TO DESIGNATED CIRCUIT.

POWER PLAN - PLATFORM LEVEL - PARTIAL 4 (1)

The light /motion Collaborative
EDGE studio and Pfaffmann & Associates

EDGE studio
5411 Penn Avenue
Pittsburgh, PA 15206
tel: 412.363.5000
fax: 412.363.5005

Pfaffmann & Associates
223 Fourth Avenue
Pittsburgh, PA 15222
tel: 412.471.2470
fax: 412.471.2472

Allen & Shariff
ENGINEERING
700 River Avenue, Suite 333
Pittsburgh, PA 15212
Tel: 412.322.9280
Fax: 412.322.9281

NO.	DATE	DESCRIPTION

REVISIONS

THE PREPARATION OF THIS DOCUMENT HAS BEEN FINANCED IN PART THROUGH A GRANT FROM THE FEDERAL TRANSIT ADMINISTRATION, U.S. DEPARTMENT OF TRANSPORTATION, UNDER THE URBAN MASS TRANSPORTATION ACT OF 1964, AS AMENDED, FOR THE PORT AUTHORITY OF ALLEGHENY COUNTY, PENNSYLVANIA.

COMMONWEALTH OF PENNSYLVANIA REGISTERED PROFESSIONAL ENGINEER Anthony E. Molinaro Jr. 41354-E

SIGNATURE

DMJM HARRIS | AECOM
FOUR GATEWAY CENTER
20TH FLOOR
PITTSBURGH, PA. 15222

APPROVED — DATE 4/29/08

DESIGNED	MTY
DRAWN	MTY
CHECKED	AEM
IN CHARGE	AEM
DATE APRIL 29, 2008	
SCALE 1/8"=1'-0"	

8' 4' 0 8'

PORT AUTHORITY OF ALLEGHENY COUNTY
PITTSBURGH PENNSYLVANIA

NORTH SHORE CONNECTOR
GATEWAY STATION SHELL

POWER PLAN - PLATFORM LEVEL
PARTIAL 4

Port Authority
connectingpeople to life

CONTRACT NO. NSC-010E

DWG.NO. EL 014 SHT. 215

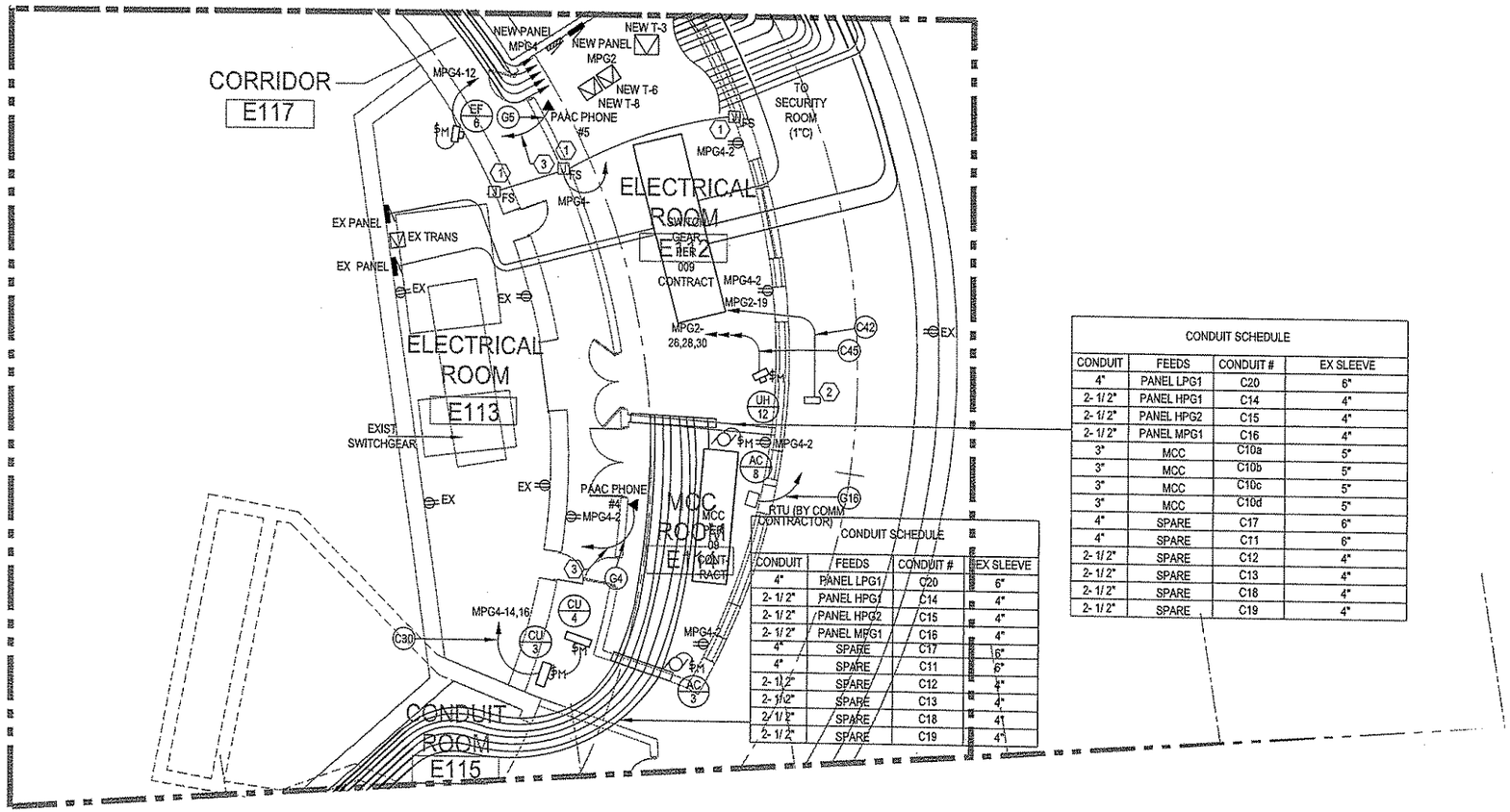

CONDUIT SCHEDULE			
CONDUIT	FEEDS	CONDUIT #	EX SLEEVE
4"	PANEL LPG1	C20	6"
2- 1/ 2"	PANEL HPG1	C14	4"
2- 1/ 2"	PANEL HPG2	C15	4"
2- 1/ 2"	PANEL MPG1	C16	4"
3"	MCC	C10a	5"
3"	MCC	C10b	5"
3"	MCC	C10c	5"
3"	MCC	C10d	5"
4"	SPARE	C17	6"
4"	SPARE	C11	6"
2- 1/ 2"	SPARE	C12	4"
2- 1/ 2"	SPARE	C13	4"
2- 1/ 2"	SPARE	C18	4"
2- 1/ 2"	SPARE	C19	4"

CONDUIT SCHEDULE			
CONDUIT	FEEDS	CONDUIT #	EX SLEEVE
4"	PANEL LPG1	C20	6"
2- 1/ 2"	PANEL HPG1	C14	4"
2- 1/ 2"	PANEL HPG2	C15	4"
2- 1/ 2"	PANEL MPG1	C16	4"
4"	SPARE	C17	6"
4"	SPARE	C11	6"
2- 1/ 2"	SPARE	C12	4"
2- 1/ 2"	SPARE	C13	4"
2/ 1/ 2"	SPARE	C18	4"
2- 1/ 2"	SPARE	C19	4"

GENERAL NOTES:

1. WHERE WIRE SIZE IN NOT INDICATED, #12 AWG MINIMUM SHALL BE USED FOR CIRCUITS LESS THAN 100 FEET IN LENGTH, #10 AWG SHALL BE USED FOR CIRCUITS FROM 100 TO 150 FEET IN LENGTH AND #8 AWG SHALL BE USED FOR CIRCUITS FROM 150 TO 250 IN LENGTH.

2. FIRE STOP ALL FLOOR AND WALL PENETRATIONS AS REQUIRED BY CODE.

3. THIS CONTRACTOR IS RESPONSIBLE FOR ALL CONDUIT AND JUNCTION BOXES FOR ALL COMMUNICATIONS DEVICES, FIRE ALARM DEVICES AND SECURITY DEVICES.

4. SEE MECHANICAL SCHEDULE FOR EQUIPMENT CONNECTIONS AND WIRE SIZES. THE EC SHALL VERIFY ALL MECHANICAL EQUIPMENT SPECIFICATIONS (VOLTAGE, HORSEPOWER, KILOWATTS, CONNECTION, ETC) PRIOR TO ROUGH-IN OR PLACING FINAL PURCHASE ORDERS FOR ANY ELECTRICAL DEVICES.

5. ALL PAAC PHONES AND EM PHONES SHALL BE MOUNTED AT 48" AFF.

CODED NOTES:

(1) PROVIDE 20A CONNECTION TO FIRE/SMOKE DAMPER. DAMPER PROVIDED AND INSTALLED BY MECHANICAL CONTRACTOR, WIRED BY ELECTRICAL CONTRACTOR. CIRCUIT TO MPGH-2.

(2) ELECTRICAL CONTRACTOR SHALL PROVIDE A 30A, 277V CONNECTION TO HEAT TRACE CONTROLLER (PROVIDED BY OTHERS). ELECTRICAL CONTRACTOR SHALL RUN 2 #10 + #10G - 1#C. TO DESIGNATED CIRCUIT.

(3) HOME RUN CONDUIT TO COMMUNICATIONS ROOM E111.

POWER PLAN - PLATFORM LEVEL - PARTIAL 5 (1/-)

The light /motion Collaborative
EDGE studio
5411 Penn Avenue
Pittsburgh, PA 15206
tel: 412/943.5000
fax: 412/943.5006
Pfaffmann & Associates
225 Fourth Avenue
Pittsburgh, PA 15222
tel: 412/471.2470
fax: 412/471.2472

Allen & Shariff
ENGINEERING
700 River Avenue, Suite 333
Pittsburgh, PA 15212
Tel: 412.322.9280
Fax: 412.322.9281

NO.	DATE	DESCRIPTION

REVISIONS

THE PREPARATION OF THIS DOCUMENT HAS BEEN FINANCED IN PART THROUGH A GRANT FROM THE FEDERAL TRANSIT ADMINISTRATION, U.S. DEPARTMENT OF TRANSPORTATION, UNDER THE URBAN MASS TRANSPORTATION ACT OF 1964, AS AMENDED, FOR THE PORT AUTHORITY OF ALLEGHENY COUNTY, PENNSYLVANIA.

COMMONWEALTH OF PENNSYLVANIA REGISTERED PROFESSIONAL Anthony E. Molinaro Jr. 41354-E

SIGNATURE

DMJM HARRIS | AECOM
FOUR GATEWAY CENTER
20TH FLOOR
PITTSBURGH, PA. 15222

APPROVED — DATE 4/29/08

DESIGNED	MTY
DRAWN	MTY
CHECKED	AEM
IN CHARGE	AEM
DATE APRIL 29, 2008	
SCALE 1/8"=1'-0"	

8' 4' 0 8'

PORT AUTHORITY OF ALLEGHENY COUNTY
PITTSBURGH PENNSYLVANIA

NORTH SHORE CONNECTOR
GATEWAY STATION SHELL
POWER PLAN - PLATFORM LEVEL
PARTIAL 5

Port Authority
connecting people to life

CONTRACT NO. NSC-010E
DWG. NO. EL 015 SHT. 216

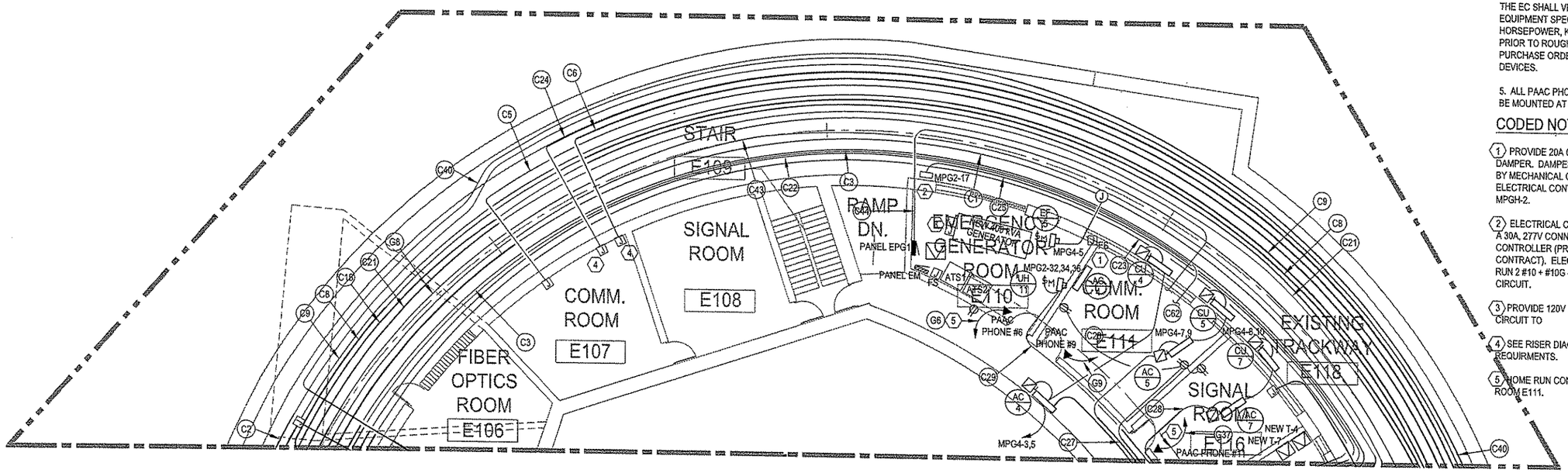

GENERAL NOTES:

1. WHERE WIRE SIZE IN NOT INDICATED, #12 AWG MINIMUM SHALL BE USED FOR CIRCUITS LESS THAN 100 FEET IN LENGTH, #10 AWG SHALL BE USED FOR CIRCUITS FROM 100 TO 150 FEET IN LENGTH AND #8 AWG SHALL BE USED FOR CIRCUITS FROM 150 TO 250 IN LENGTH.

2. FIRE STOP ALL FLOOR AND WALL PENETRATIONS AS REQUIRED BY CODE.

3. THIS CONTRACTOR IS RESPONSIBLE FOR ALL CONDUIT AND JUNCTION BOXES FOR ALL COMMUNICATIONS DEVICES, FIRE ALARM DEVICES AND SECURITY DEVICES.

4. SEE MECHANICAL SCHEDULE FOR EQUIPMENT CONNECTIONS AND WIRE SIZES. THE EC SHALL VERIFY ALL MECHANICAL EQUIPMENT SPECIFICATIONS (VOLTAGE, HORSEPOWER, KILOWATTS, CONNECTION, ETC) PRIOR TO ROUGH-IN OR PLACING FINAL PURCHASE ORDERS FOR ANY ELECTRICAL DEVICES.

5. ALL PAAC PHONES AND EM PHONES SHALL BE MOUNTED AT 48" AFF.

CODED NOTES:

1. PROVIDE 20A CONNECTION TO FIRE/SMOKE DAMPER. DAMPER PROVIDED AND INSTALLED BY MECHANICAL CONTRACTOR, WIRED BY ELECTRICAL CONTRACTOR. CIRCUIT TO MPGH-2.

2. ELECTRICAL CONTRACTOR SHALL PROVIDE A 30A, 277V CONNECTION TO HEAT TRACE CONTROLLER (PROVIDED BY OTHER CONTRACT). ELECTRICAL CONTRACTOR SHALL RUN 2 #10 + #10G - 1#C. TO DESIGNATED CIRCUIT.

3. PROVIDE 120V CONNECTION TO GENERATOR. CIRCUIT TO

4. SEE RISER DIAGRAM FOR JUNCTION BOX REQUIRMENTS.

5. HOME RUN CONDUIT TO COMMUNICATIONS ROOM E111.

POWER PLAN - PLATFORM LEVEL - PARTIAL 6 (1)

The light /motion Collaborative
EDGE studio and Pfaffmann & Associates

EDGE studio
5411 Penn Avenue
Pittsburgh, PA 15206
tel: 412.345.5600
fax: 412.345.5606

Pfaffmann & Associates
220 Fourth Avenue
Pittsburgh, PA 15222
tel: 412.471.2472
fax: 412.471.2472

Allen & Shariff
ENGINEERING
700 River Avenue, Suite 333
Pittsburgh, PA 15212
Tel: 412.322.9280
Fax: 412.322.9281

NO.	DATE	DESCRIPTION

REVISIONS

THE PREPARATION OF THIS DOCUMENT HAS BEEN FINANCED IN PART THROUGH A GRANT FROM THE FEDERAL TRANSIT ADMINISTRATION, U.S. DEPARTMENT OF TRANSPORTATION, UNDER THE URBAN MASS TRANSPORTATION ACT OF 1964, AS AMENDED, FOR THE PORT AUTHORITY OF ALLEGHENY COUNTY, PENNSYLVANIA.

COMMONWEALTH OF PENNSYLVANIA REGISTERED PROFESSIONAL Anthony E. Molinaro ENGINEER 41354-E
SIGNATURE

DMJM HARRIS | AECOM
FOUR GATEWAY CENTER
20TH FLOOR
PITTSBURGH, PA. 15222
APPROVED 4/29/08
DATE

DESIGNED	MTY
DRAWN	MTY
CHECKED	AEM
IN CHARGE	AEM
DATE APRIL 29, 2008	
SCALE 1/8"=1'-0"	

8' 4' 0 8'

PORT AUTHORITY OF ALLEGHENY COUNTY
PITTSBURGH PENNSYLVANIA

NORTH SHORE CONNECTOR
GATEWAY STATION SHELL
POWER PLAN - PLATFORM LEVEL
PARTIAL 6

Port Authority
connecting people to life

CONTRACT NO. NSC-010E
DWG. NO. EL 016
SHT. 217

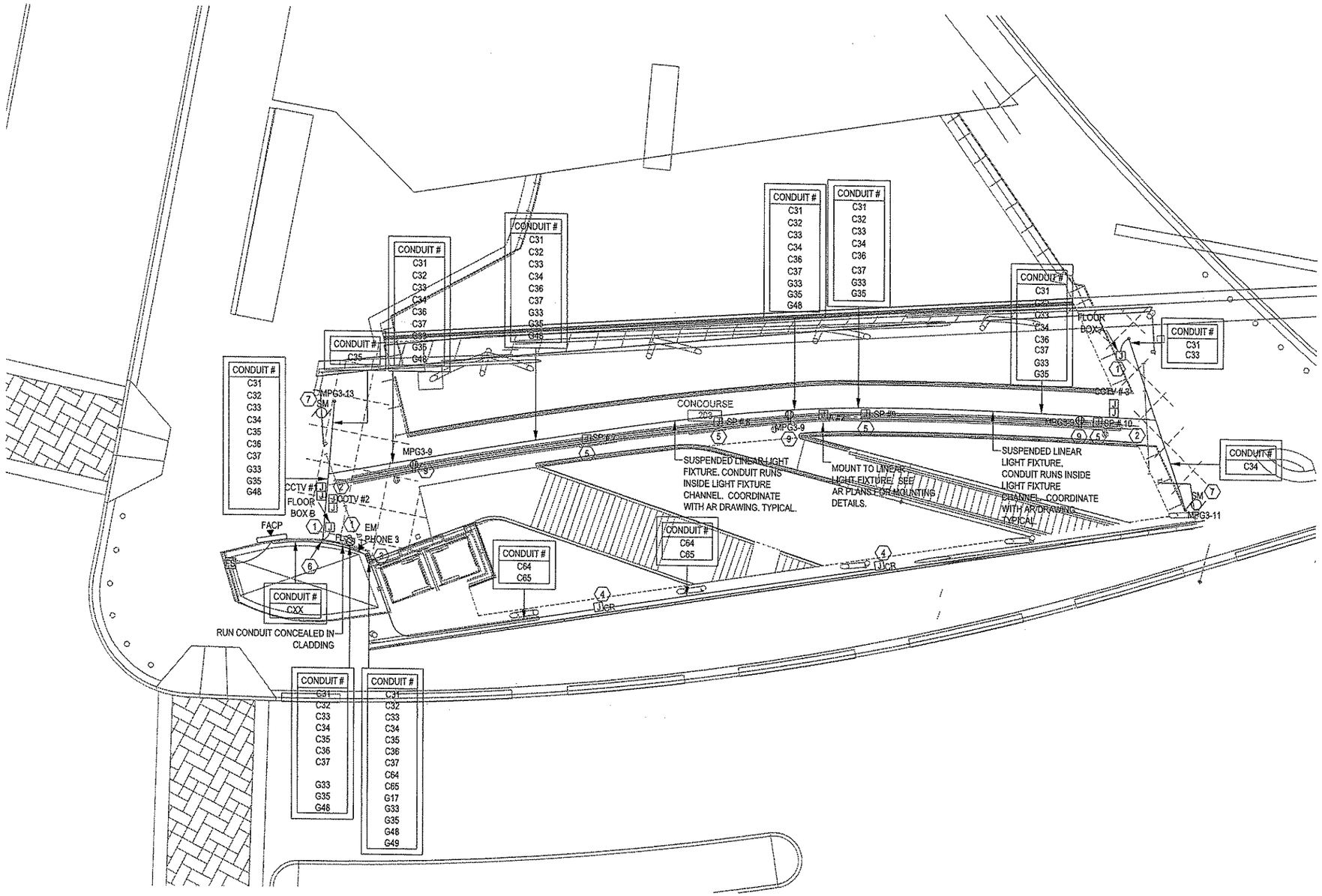

GENERAL NOTES:

1. WHERE WIRE SIZE IN NOT INDICATED, #12 AWG MINIMUM SHALL BE USED FOR CIRCUITS LESS THAN 100 FEET IN LENGTH, #10 AWG SHALL BE USED FOR CIRCUITS FROM 100 TO 150 FEET IN LENGTH AND #8 AWG SHALL BE USED FOR CIRCUITS FROM 150 TO 250 IN LENGTH.

2. FIRE STOP ALL FLOOR AND WALL PENETRATIONS AS REQUIRED BY CODE.

3. THIS CONTRACTOR IS RESPONSIBLE FOR ALL CONDUIT AND JUNCTION BOXES FOR ALL COMMUNICATIONS DEVICES, FIRE ALARM DEVICES AND SECURITY DEVICES.

4. SEE MECHANICAL SCHEDULE FOR EQUIPMENT CONNECTIONS AND WIRE SIZES. THE EC SHALL VERIFY ALL MECHANICAL EQUIPMENT SPECIFICATIONS (VOLTAGE, HORSEPOWER, KILOWATTS, CONNECTION, ETC) PRIOR TO ROUGH-IN OR PLACING FINAL PURCHASE ORDERS FOR ANY ELECTRICAL DEVICES.

CODED NOTES:

1. PROVIDE DOUBLE GANG FLUSH FLOOR MOUNTED JUNCTION BOX FOR FOR FUTURE TURNSTILE POWER. CONDUIT SHALL BE ROUTED DOWN FROM SUSPENDED LINEAR LIGHT FIXTURE/CONDUIT.

2. PROVIDE (2) JUNCTION BOXES FOR SECURITY CAMERA MOUNTED TO LINEAR CONDUIT.

3. CONDUIT DROP POINT TO LOWER LEVEL.

4. ELECTRICAL CONTRACTOR SHALL PROVIDE DOUBLE GANG FLUSH MOUNTED JUNCTION BOX FOR FUTURE CARD READER. MOUNT JUNCTION BOX AT LOCATION SHOWN ON ARCHITECTURAL PLANS. SHOWN 1" CONDUIT IN J BOX.

5. PROVIDE DOUBLE GANG JUNCTION BOX MOUNTED TO LINEAR CONDUIT FOR SPEAKER BACKBOX.

6. CONDUIT FEEDS UP AND INTO LINEAR CONDUIT.

7. OVERHEAD ROLLING DOOR.

8. ATTACH DEVICE TO LIGHT FIXTURE FRAME. ELECTRICAL CONTRACTOR SHALL RUN CONDUIT THROUGH LIGHT FIXTRUE CHANNEL. COORDINATE MOUNTING REQUIREMENTS WITH "AR" DRAWINGS.

9. RECEPTACLE MOUNTED TO LINEAR LIGHT FIXTURE.

POWER PLAN - CONCOURSE LEVEL - PARTIAL 7 (1)

The light /motion Collaborative
EDGE studio and Pfaffmann & Associates

EDGE studio
5411 Penn Avenue
Pittsburgh, PA 15206
tel: 412.441.2600
fax: 412.441.5006

Pfaffmann & Associates
223 Fourth Avenue
Pittsburgh, PA 15222
tel: 412.471.2472
fax: 412.471.2472

Allen & Shariff
ENGINEERING
700 River Avenue, Suite 333
Pittsburgh, PA 15212
Tel: 412.322.9280
Fax: 412.322.9281

NO.	DATE	DESCRIPTION

REVISIONS

THE PREPARATION OF THIS DOCUMENT HAS BEEN FINANCED IN PART THROUGH A GRANT FROM THE FEDERAL TRANSIT ADMINISTRATION, U. S. DEPARTMENT OF TRANSPORTATION, UNDER THE URBAN MASS TRANSPORTATION ACT OF 1964, AS AMENDED, FOR THE PORT AUTHORITY OF ALLEGHENY COUNTY, PENNSYLVANIA.

COMMONWEALTH OF PENNSYLVANIA
REGISTERED PROFESSIONAL ENGINEER
Anthony E Molinaro Jr.
41354-E

SIGNATURE

DMJM HARRIS | AECOM
FOUR GATEWAY CENTER
20TH FLOOR
PITTSBURGH, PA. 15222

APPROVED — DATE 4/29/08

DESIGNED	MTY
DRAWN	MTY
CHECKED	AEM
IN CHARGE	AEM
DATE APRIL 29, 2008	
SCALE 1/8"=1'-0"	

8' 4' 0 8'

PORT AUTHORITY OF ALLEGHENY COUNTY
PITTSBURGH PENNSYLVANIA

NORTH SHORE CONNECTOR
GATEWAY STATION SHELL
POWER PLAN - CONCOURSE LEVEL
PARTIAL 7

Port Authority
connecting people to life

CONTRACT NO. NSC-010E

DWG. NO. EL 017 SHT. 218

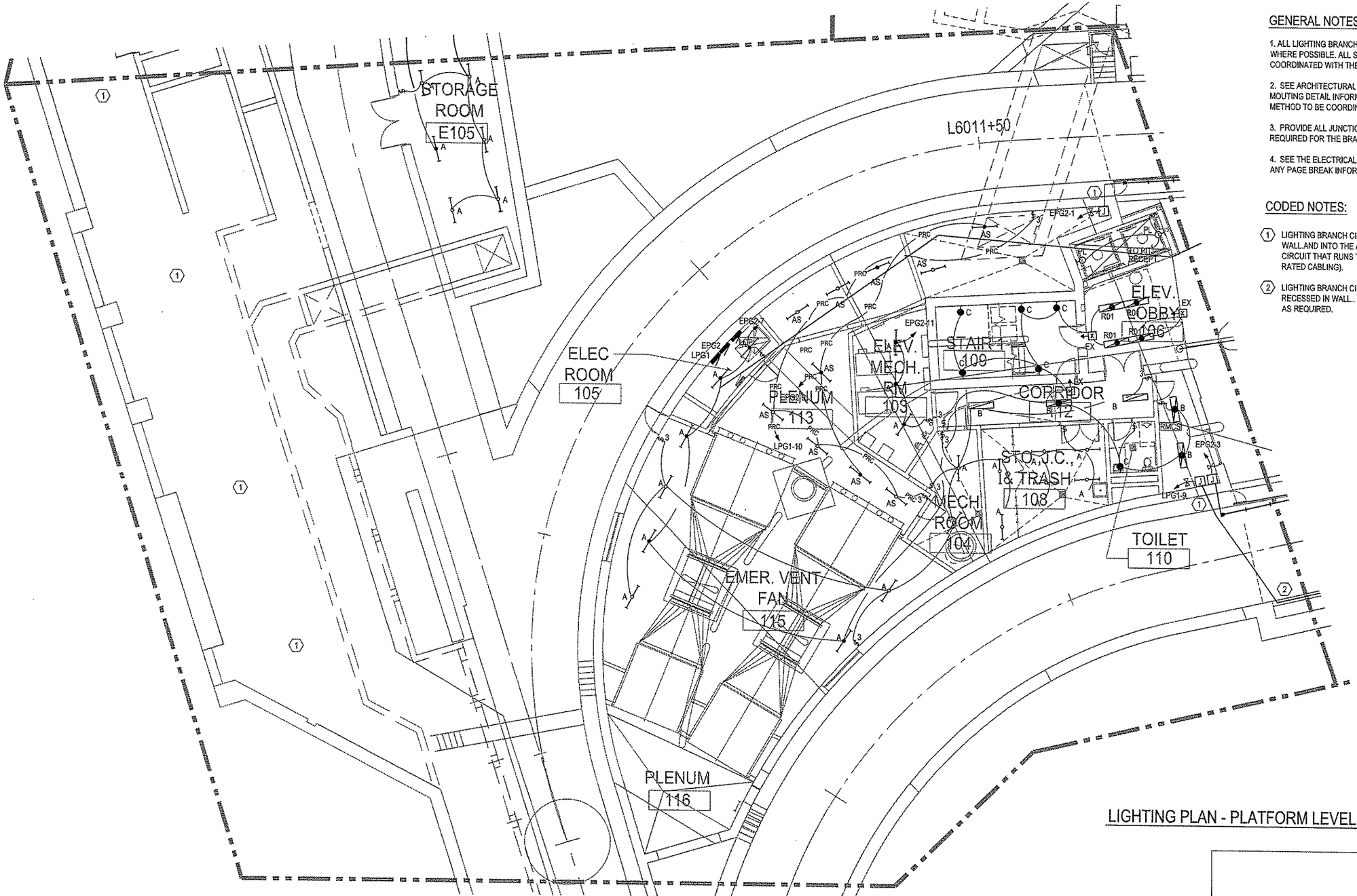

GENERAL NOTES:

1. ALL LIGHTING BRANCH CIRCUIT CONDUITS ARE TO BE CONCEALED WHERE POSSIBLE. ALL SURFACE MOUNTED CONDUIT ROUTING IS TO BE COORDINATED WITH THE ARCHITECT.

2. SEE ARCHITECTURAL DRAWINGS FOR ADDITIONAL LIGHT FIXTURE MOUTING DETAIL INFORMATION. EXACT LIGHT FIXTURE MOUNTING METHOD TO BE COORDINATED WITH THE ARCHITECT.

3. PROVIDE ALL JUNCTION BOXES, CONDUIT ELBOWS AND TAPS AS REQUIRED FOR THE BRANCH CIRCUIT CONDUIT ROUTING AS SHOWN.

4. SEE THE ELECTRICAL OVERALL PLAN DRAWINGS TO COORDINATED ANY PAGE BREAK INFORMATION BETWEEN DRAWING SHEETS.

CODED NOTES:

(1) LIGHTING BRANCH CIRCUITING TO RUN IN DOWNSTAND THEN THROUGH WALL AND INTO THE ANCILLARY SPACE. THE PORTION OF THE BRANCH CIRCUIT THAT RUNS THROUGH THE PLENUM MUST USE THE PRC (PLENUM RATED CABLING).

(2) LIGHTING BRANCH CIRCUIT TO TRANSITION FROM DOWNSTAND TO RECESSED IN WALL.. PROVIDE ALL JUNCTION BOXES AND ELBOW BENDS AS REQUIRED.

LIGHTING PLAN - PLATFORM LEVEL - PARTIAL 1 (1 / -)

The light / motion Collaborative
EDGE studio and Pfaffmann & Associates

EDGE studio
5411 Penn Avenue
Pittsburgh, PA 15206
tel: 412.363.5005
fax: 412.363.5006

Pfaffmann & Associates
203 Fourth Avenue
Pittsburgh, PA 15222
tel: 412.471.2470
fax: 412.471.2472

Allen & Shariff
ENGINEERING
700 River Avenue, Suite 333
Pittsburgh, PA 15212
Tel: 412.322.9280
Fax: 412.322.9281

NO.	DATE	DESCRIPTION

REVISIONS

THE PREPARATION OF THIS DOCUMENT HAS BEEN FINANCED IN PART THROUGH A GRANT FROM THE FEDERAL TRANSIT ADMINISTRATION, U.S. DEPARTMENT OF TRANSPORTATION, UNDER THE URBAN MASS TRANSPORTATION ACT OF 1964, AS AMENDED, FOR THE PORT AUTHORITY OF ALLEGHENY COUNTY, PENNSYLVANIA.

COMMONWEALTH OF PENNSYLVANIA
REGISTERED PROFESSIONAL ENGINEER
Anthony P. Molinaro
41354-E

SIGNATURE

DMJM HARRIS | AECOM
FOUR GATEWAY CENTER
20TH FLOOR
PITTSBURGH, PA. 15222

David P. Heinz 4/29/08
APPROVED DATE

DESIGNED	CJK
DRAWN	CJK
CHECKED	AEH
IN CHARGE	AEH
DATE APRIL 29, 2008	
SCALE 1/8"=1'-0"	

8' 4' 0 8'

PORT AUTHORITY OF ALLEGHENY COUNTY
PITTSBURGH PENNSYLVANIA

NORTH SHORE CONNECTOR
GATEWAY STATION SHELL
LIGHTING PLAN - PLATFORM LEVEL
PARTIAL 1

Port Authority
connecting people to life

CONTRACT NO. NSC-010E
DWG. NO. EL 018
SHT. 219

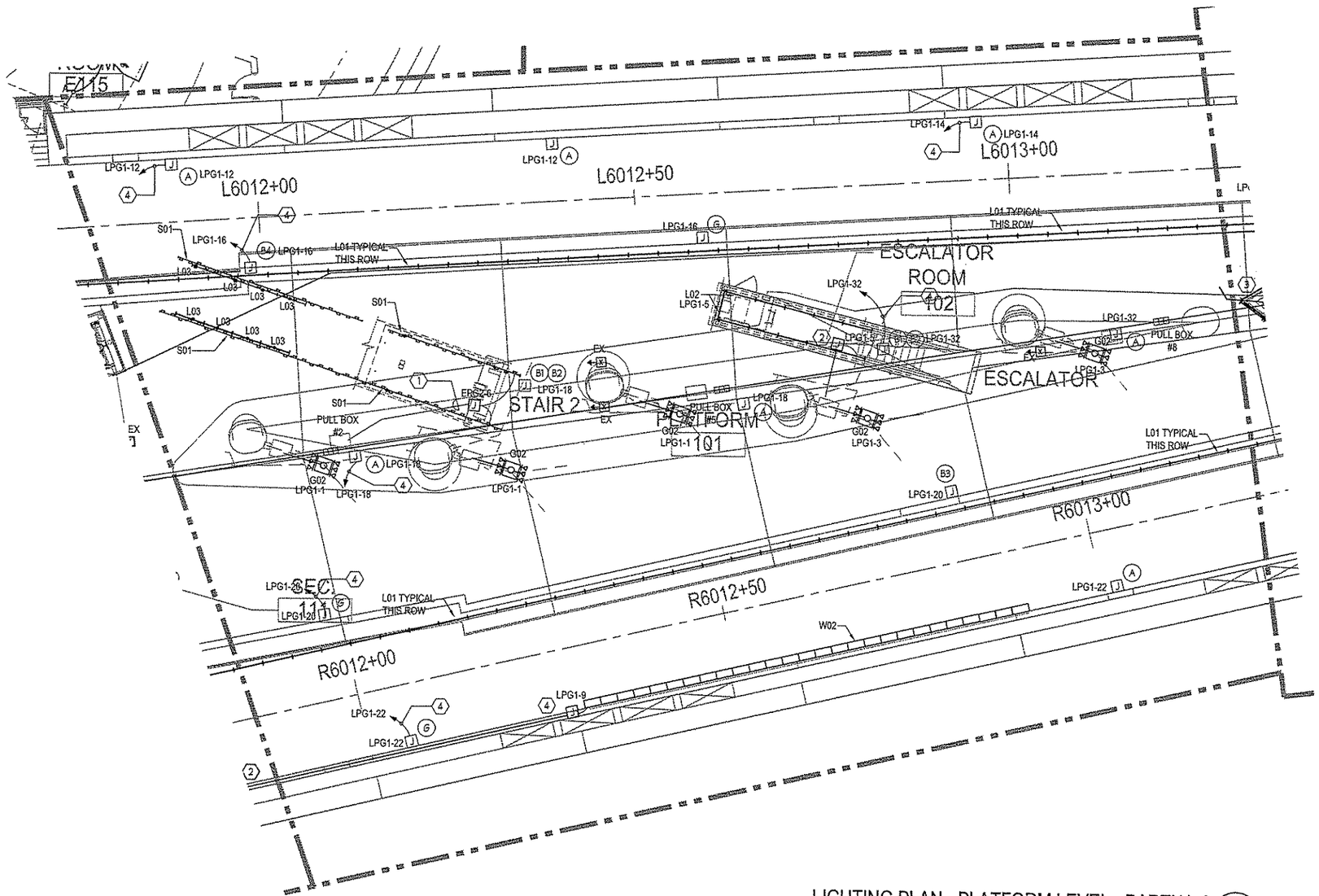

LIGHTING PLAN - PLATFORM LEVEL - PARTIAL 2 (1)

GENERAL NOTES:

1. ALL LIGHTING BRANCH CIRCUIT CONDUITS ARE TO BE CONCEALED WHERE POSSIBLE. ALL SURFACE MOUNTED CONDUIT ROUTING IS TO BE COORDINATED WITH THE ARCHITECT.

2. SEE ARCHITECTURAL DRAWINGS FOR ADDITIONAL LIGHT FIXTURE MOUTING DETAIL INFORMATION. EXACT LIGHT FIXTURE MOUNTING METHOD TO BE COORDINATED WITH THE ARCHITECT.

3. PROVIDE ALL JUNCTION BOXES, CONDUIT ELBOWS AND TAPS AS REQUIRED FOR THE BRANCH CIRCUIT CONDUIT ROUTING AS SHOWN.

4. SEE THE ELECTRICAL OVERALL PLAN DRAWINGS TO COORDINATED ANY PAGE BREAK INFORMATION BETWEEN DRAWING SHEETS.

5. SEE LIGHTING CONTROL PANEL DETAILS ON DRAWING EL 008 FOR ADDITIONAL INFORMATION.

6. SEE POWER ELECTRICAL POWER DRAWINGS FOR CONDUIT ROUTING INFORMATION.

7. COORDINATE THE EXACT SIGNAGE LOCATIONS WITH ARCHITECTURALDRAWINGS AND ELEVATIONS.

CODED NOTES:

(1) LIGHTING BRANCH CIRCUITING FOR STAIR LIGHT FIXTURES TYPE S01 AND L03 TO RUN FROM PULL BOX TO STAIR LIGHT FIXTURES. SEE CONDUIT ROUTING SCHEDULES FOR ADDITIONAL INFORMATION.

(2) LIGHTING BRANCH CIRCUITING FOR ESCALATOR EQUIPMENT ROOM LIGHT FIXTURES TYPE L02 TO RUN FROM PULL BOX TO LIGHT FIXTURES. SEE CONDUIT ROUTING SCHEDULES FOR ADDITIONAL INFORMATION.

(3) THIS IS THE DESIGNATED BREAK LINE FOR THE TWO LIGHTING BRANCH CIRCUITS USED FOR TYPE L01 LIGHT FIXTURES.

(4) RUN #8AWG CONDUCTORS THROUGHOUT THIS LIGHTING CIRCUIT.

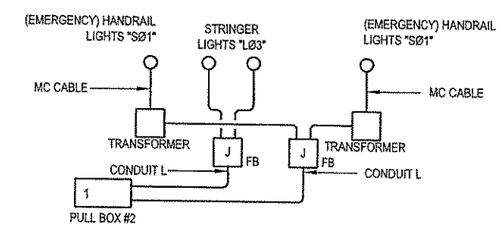

LIGHT DETAIL (2)

NO SCALE

The light / motion Collaborative
EDGE studio and Pfaffmann & Associates

EDGE studio
5411 Penn Avenue
Pittsburgh, PA 15206
tel: 412/345 9005
fax: 412/345 9009

Pfaffmann & Associates
323 Fourth Avenue
Pittsburgh, PA 15222
tel: 412/471 2470
fax: 412/471 2472

Allen & Shariff
ENGINEERING
700 River Avenue, Suite 333
Pittsburgh, PA 15212
Tel: 412.322.9280
Fax: 412.322.9281

NO.	DATE	DESCRIPTION

REVISIONS

THE PREPARATION OF THIS DOCUMENT HAS BEEN FINANCED IN PART THROUGH A GRANT FROM THE FEDERAL TRANSIT ADMINISTRATION, U.S. DEPARTMENT OF TRANSPORTATION, UNDER THE URBAN MASS TRANSPORTATION ACT OF 1964, AS AMENDED, FOR THE PORT AUTHORITY OF ALLEGHENY COUNTY, PENNSYLVANIA.

COMMONWEALTH OF PENNSYLVANIA
REGISTERED PROFESSIONAL ENGINEER
Anthony E. Molinaro Jr.
41354-E

SIGNATURE

DMJM HARRIS | AECOM
FOUR GATEWAY CENTER
20TH FLOOR
PITTSBURGH, PA. 15222

APPROVED 4/29/08
DATE

DESIGNED	CJK
DRAWN	CJK
CHECKED	AEM
IN CHARGE	AEM
DATE APRIL 29, 2008	
SCALE 1/8"=1'-0"	

8' 4' 0 8'

PORT AUTHORITY OF ALLEGHENY COUNTY
PITTSBURGH PENNSYLVANIA

NORTH SHORE CONNECTOR
GATEWAY STATION SHELL
LIGHTING PLAN - PLATFORM LEVEL
PARTIAL 2

Port Authority
connecting people to life

CONTRACT NO. NSC-010E
DWG. NO. EL 019
SHT. 220

GENERAL NOTES:

1. ALL LIGHTING BRANCH CIRCUIT CONDUITS ARE TO BE CONCEALED WHERE POSSIBLE. ALL SURFACE MOUNTED CONDUIT ROUTING IS TO BE COORDINATED WITH THE ARCHITECT.

2. SEE ARCHITECTURAL DRAWINGS FOR ADDITIONAL LIGHT FIXTURE MOUTING DETAIL INFORMATION. EXACT LIGHT FIXTURE MOUNTING METHOD TO BE COORDINATED WITH THE ARCHITECT.

3. PROVIDE ALL JUNCTION BOXES, CONDUIT ELBOWS AND TAPS AS REQUIRED FOR THE BRANCH CIRCUIT CONDUIT ROUTING AS SHOWN.

4. SEE THE ELECTRICAL OVERALL PLAN DRAWINGS TO COORDINATED ANY PAGE BREAK INFORMATION BETWEEN DRAWING SHEETS.

5. SEE POWER ELECTRICAL POWER DRAWINGS FOR CONDUIT ROUTING INFORMATION.

6. COORDINATE THE EXACT SIGNAGE LOCATIONS WITH ARCHITECTURALDRAWINGS AND ELEVATIONS.

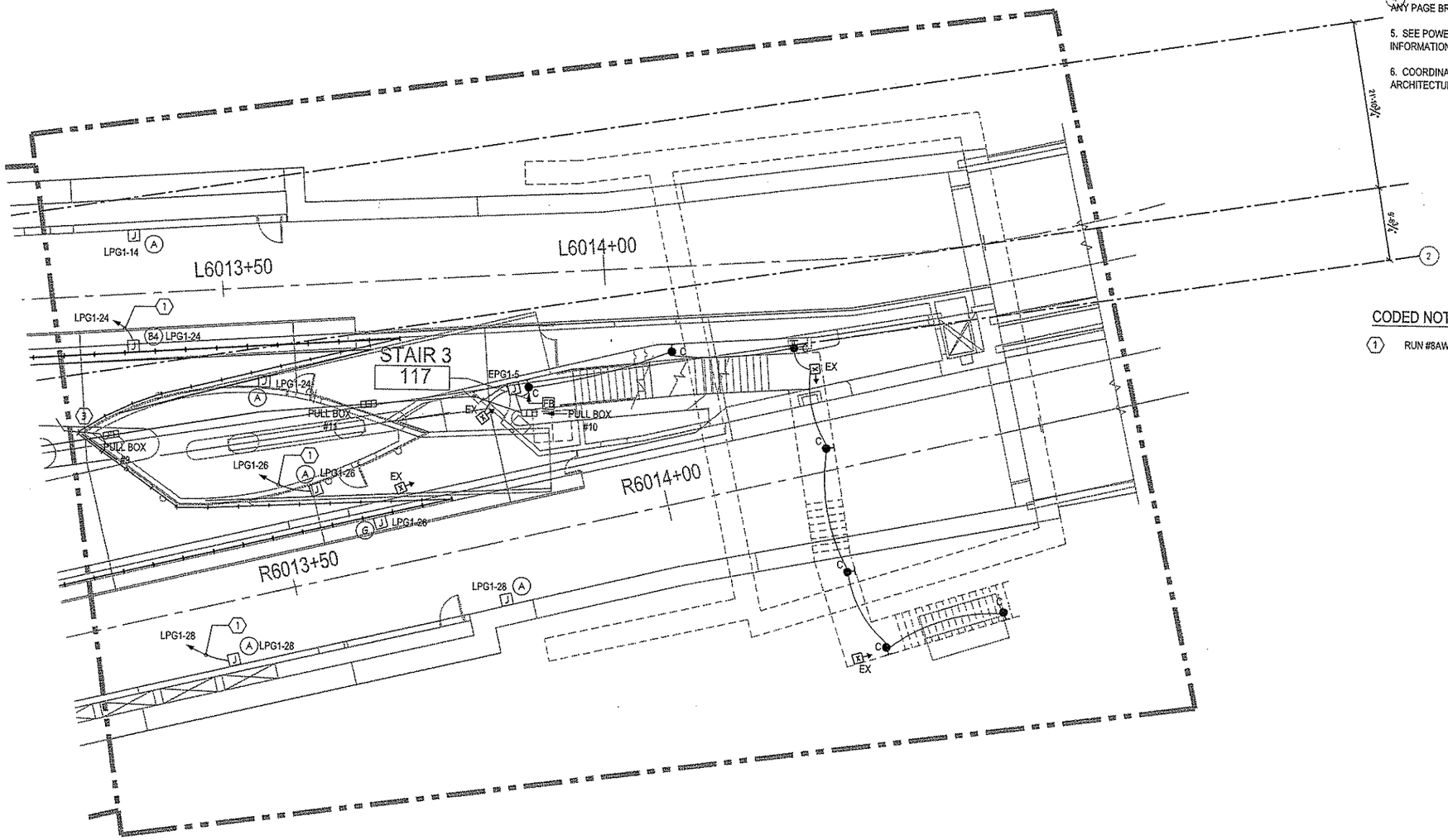

CODED NOTES:

1. RUN #8AWG CONDUCTORS THROUGHOUT THIS LIGHTING CIRCUIT.

LIGHTING PLAN - PLATFORM LEVEL - PARTIAL 3 (1)

The light /motion Collaborative
EDGE studio and Pfaffmann & Associates

EDGE studio
5411 Penn Avenue
Pittsburgh, PA 15206
tel: 412.345.5000
fax: 412.345.5006

Pfaffmann & Associates
223 Fourth Avenue
Pittsburgh, PA 15222
tel: 412.471.2472
fax: 412.471.2472

Allen & Shariff
ENGINEERING
700 River Avenue, Suite 333
Pittsburgh, PA 15212
Tel: 412.322.9280
Fax: 412.322.9281

NO.	DATE	DESCRIPTION

REVISIONS

THE PREPARATION OF THIS DOCUMENT HAS BEEN FINANCED IN PART THROUGH A GRANT FROM THE FEDERAL TRANSIT ADMINISTRATION, U.S. DEPARTMENT OF TRANSPORTATION, UNDER THE URBAN MASS TRANSPORTATION ACT OF 1964, AS AMENDED, FOR THE PORT AUTHORITY OF ALLEGHENY COUNTY, PENNSYLVANIA.

COMMONWEALTH OF PENNSYLVANIA
REGISTERED PROFESSIONAL
Anthony E. Molinaro Jr.
ENGINEER
41354-E

SIGNATURE

DMJM HARRIS | AECOM
FOUR GATEWAY CENTER
20TH FLOOR
PITTSBURGH, PA. 15222

APPROVED — DATE 4/29/08

DESIGNED	CJK
DRAWN	CJK
CHECKED	AEM
IN CHARGE	AEM
DATE APRIL 29, 2008	
SCALE 1/8"=1'-0"	

8' 4' 0 8'

PORT AUTHORITY OF ALLEGHENY COUNTY
PITTSBURGH PENNSYLVANIA

NORTH SHORE CONNECTOR
GATEWAY STATION SHELL
LIGHTING PLAN - PLATFORM LEVEL
PARTIAL 3

Port Authority
connecting people to life

CONTRACT NO. NSC-010E
DWG. NO. EL 020
SHT. 221

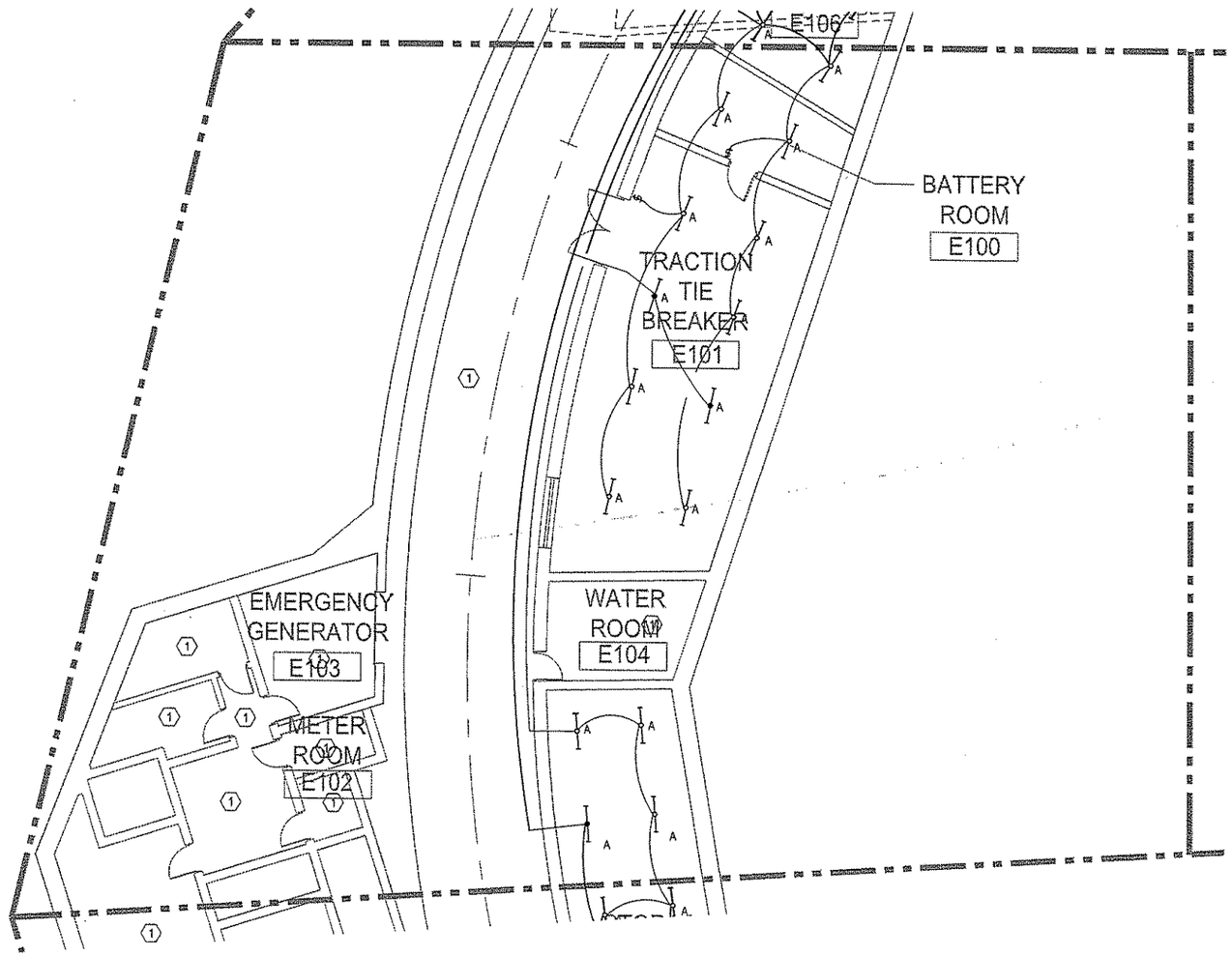

LIGHTING PLAN - PLATFORM LEVEL - PARTIAL 4 (1)

GENERAL NOTES:

1. ALL LIGHTING BRANCH CIRCUIT CONDUITS ARE TO BE CONCEALED WHERE POSSIBLE. ALL SURFACE MOUNTED CONDUIT ROUTING IS TO BE COORDINATED WITH THE ARCHITECT.

2. SEE ARCHITECTURAL DRAWINGS FOR ADDITIONAL LIGHT FIXTURE MOUTING DETAIL INFORMATION. EXACT LIGHT FIXTURE MOUNTING METHOD TO BE COORDINATED WITH THE ARCHITECT.

3. PROVIDE ALL JUNCTION BOXES, CONDUIT ELBOWS AND TAPS AS REQUIRED FOR THE BRANCH CIRCUIT CONDUIT ROUTING AS SHOWN.

4. SEE THE ELECTRICAL OVERALL PLAN DRAWINGS TO COORDINATED ANY PAGE BREAK INFORMATION BETWEEN DRAWING SHEETS.

CODED NOTES:

(1) EXISTING AREA, LIGHTING TO REMAIN

The light /motion Collaborative
EDGE studio and Pittmann & Associates

EDGE studio
5411 Penn Avenue
Pittsburgh, PA 15206
tel: 412/345.5005
fax: 412/345.5006

Pittmann & Associates
223 Fourth Avenue
Pittsburgh, PA 15222
tel: 412/471.2470
fax: 412/471.2472

Allen & Shariff
ENGINEERING
700 River Avenue, Suite 333
Pittsburgh, PA 15212
Tel: 412.322.9280
Fax: 412.322.9281

NO.	DATE	DESCRIPTION

REVISIONS

THE PREPARATION OF THIS DOCUMENT HAS BEEN FINANCED IN PART THROUGH A GRANT FROM THE FEDERAL TRANSIT ADMINISTRATION, U.S. DEPARTMENT OF TRANSPORTATION, UNDER THE URBAN MASS TRANSPORTATION ACT OF 1964, AS AMENDED, FOR THE PORT AUTHORITY OF ALLEGHENY COUNTY, PENNSYLVANIA.

COMMONWEALTH OF PENNSYLVANIA REGISTERED PROFESSIONAL Anthony R. Molinaro Jr. ENGINEER 41354-E

SIGNATURE

DMJM HARRIS | AECOM
FOUR GATEWAY CENTER
20TH FLOOR
PITTSBURGH, PA. 15222

APPROVED 4/29/08 DATE

DESIGNED	CJK
DRAWN	CJK
CHECKED	AEM
IN CHARGE	AEM
DATE APRIL 29, 2008	
SCALE 1/8"=1'-0"	

8' 4' 0 8'

PORT AUTHORITY OF ALLEGHENY COUNTY
PITTSBURGH PENNSYLVANIA

NORTH SHORE CONNECTOR
GATEWAY STATION SHELL
LIGHTING PLAN - PLATFORM LEVEL
PARTIAL 4

Port Authority
connecting people to life

CONTRACT NO. NSC-010E

DWG. NO. EL 021 SHT. 222

GENERAL NOTES:

1. ALL LIGHTING BRANCH CIRCUIT CONDUITS ARE TO BE CONCEALED WHERE POSSIBLE. ALL SURFACE MOUNTED CONDUIT ROUTING IS TO BE COORDINATED WITH THE ARCHITECT.

2. SEE ARCHITECTURAL DRAWINGS FOR ADDITIONAL LIGHT FIXTURE MOUTING DETAIL INFORMATION. EXACT LIGHT FIXTURE MOUNTING METHOD TO BE COORDINATED WITH THE ARCHITECT.

3. PROVIDE ALL JUNCTION BOXES, CONDUIT ELBOWS AND TAPS AS REQUIRED FOR THE BRANCH CIRCUIT CONDUIT ROUTING AS SHOWN.

4. SEE THE ELECTRICAL OVERALL PLAN DRAWINGS TO COORDINATED ANY PAGE BREAK INFORMATION BETWEEN DRAWING SHEETS.

CODED NOTES:

(1) EXISTING AREA, LIGHTING TO REMAIN

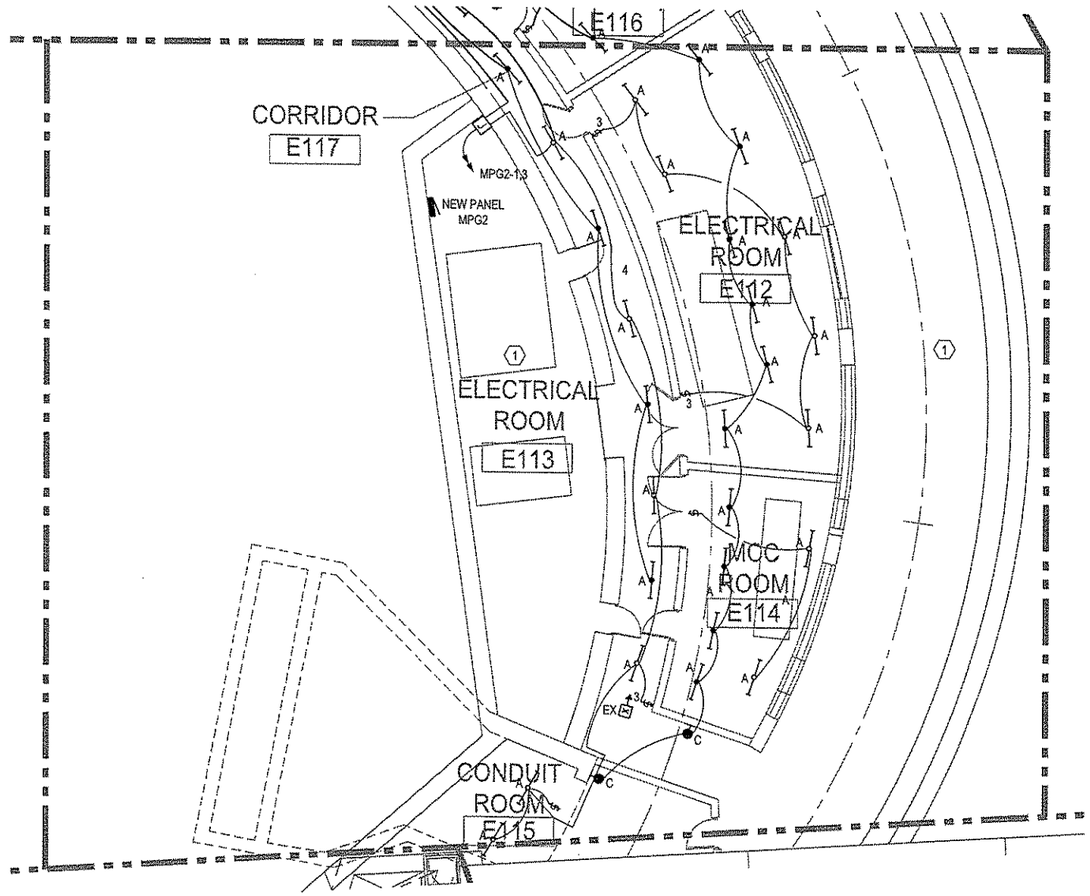

LIGHTING PLAN - PLATFORM LEVEL - PARTIAL 5 (1)

The light /motion Collaborative
EDGE studio and Pfaffmann & Associates

EDGE studio
5411 Penn Avenue
Pittsburgh, PA 15206
tel: 412.345.9005
fax: 412.345.9006

Pfaffmann & Associates
225 Fourth Avenue
Pittsburgh, PA 15222
tel: 412.471.2472
fax: 412.471.2472

Allen & Shariff
ENGINEERING
700 River Avenue, Suite 333
Pittsburgh, PA 15212
Tel: 412.322.9280
Fax: 412.322.9281

NO.	DATE	DESCRIPTION

REVISIONS

THE PREPARATION OF THIS DOCUMENT HAS BEEN FINANCED IN PART THROUGH A GRANT FROM THE FEDERAL TRANSIT ADMINISTRATION, U.S. DEPARTMENT OF TRANSPORTATION, UNDER THE URBAN MASS TRANSPORTATION ACT OF 1964, AS AMENDED, FOR THE PORT AUTHORITY OF ALLEGHENY COUNTY, PENNSYLVANIA.

COMMONWEALTH OF PENNSYLVANIA REGISTERED PROFESSIONAL ENGINEER Anthony E. Molloy Jr. 41354-E

SIGNATURE

DMJM HARRIS | AECOM
FOUR GATEWAY CENTER
20TH FLOOR
PITTSBURGH, PA. 15222

APPROVED — DATE 4/29/08

DESIGNED	CJK
DRAWN	CJK
CHECKED	AEM
IN CHARGE	AEM
DATE APRIL 29, 2008	
SCALE 1/8"=1'-0"	

8' 4' 0 8'

PORT AUTHORITY OF ALLEGHENY COUNTY
PITTSBURGH PENNSYLVANIA

NORTH SHORE CONNECTOR
GATEWAY STATION SHELL
LIGHTING PLAN - PLATFORM LEVEL
PARTIAL 5

Port Authority connecting people to life

CONTRACT NO. NSC-010E

DWG. NO. EL 022 SHT. 223

GENERAL NOTES:

1. ALL LIGHTING BRANCH CIRCUIT CONDUITS ARE TO BE CONCEALED WHERE POSSIBLE. ALL SURFACE MOUNTED CONDUIT ROUTING IS TO BE COORDINATED WITH THE ARCHITECT.

2. SEE ARCHITECTURAL DRAWINGS FOR ADDITIONAL LIGHT FIXTURE MOUTING DETAIL INFORMATION. EXACT LIGHT FIXTURE MOUNTING METHOD TO BE COORDINATED WITH THE ARCHITECT.

3. PROVIDE ALL JUNCTION BOXES, CONDUIT ELBOWS AND TAPS AS REQUIRED FOR THE BRANCH CIRCUIT CONDUIT ROUTING AS SHOWN.

4. SEE THE ELECTRICAL OVERALL PLAN DRAWINGS TO COORDINATED ANY PAGE BREAK INFORMATION BETWEEN DRAWING SHEETS.

CODED NOTES:

(1) EXISTING AREA, LIGHTING TO REMAIN

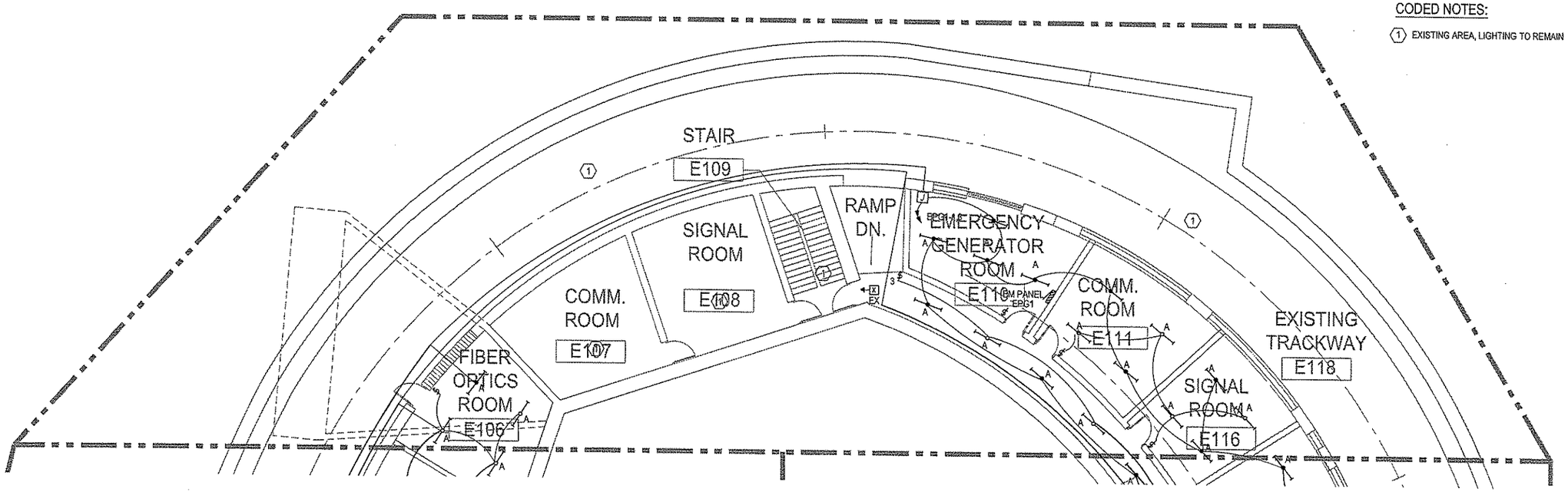

LIGHTING PLAN - PLATFORM LEVEL - PARTIAL 6 (1)

The light / motion Collaborative
EDGE studio and Pfaffmann & Associates

EDGE studio
5411 Penn Avenue
Pittsburgh, PA 15206
tel: 412.345.9005
fax: 412.345.9006

Pfaffmann & Associates
323 Fourth Avenue
Pittsburgh, PA 15222
tel: 412.471.2470
fax: 412.471.2472

Allen & Shariff
ENGINEERING
700 River Avenue, Suite 333
Pittsburgh, PA 15212
Tel: 412.322.9280
Fax: 412.322.9281

NO.	DATE	DESCRIPTION

REVISIONS

THE PREPARATION OF THIS DOCUMENT HAS BEEN FINANCED IN PART THROUGH A GRANT FROM THE FEDERAL TRANSIT ADMINISTRATION, U.S. DEPARTMENT OF TRANSPORTATION, UNDER THE URBAN MASS TRANSPORTATION ACT OF 1964, AS AMENDED, FOR THE PORT AUTHORITY OF ALLEGHENY COUNTY, PENNSYLVANIA.

COMMONWEALTH OF PENNSYLVANIA REGISTERED PROFESSIONAL ENGINEER Anthony E. Molinaro 41354-E

SIGNATURE

DMJM HARRIS | AECOM
FOUR GATEWAY CENTER
20TH FLOOR
PITTSBURGH, PA. 15222

APPROVED — DATE 4/29/08

DESIGNED	CJK
DRAWN	CJK
CHECKED	AEM
IN CHARGE	AEM
DATE APRIL 29, 2008	
SCALE 1/8"=1'-0"	

8' 4' 0 8'

PORT AUTHORITY OF ALLEGHENY COUNTY
PITTSBURGH PENNSYLVANIA

NORTH SHORE CONNECTOR
GATEWAY STATION SHELL
LIGHTING PLAN - PLATFORM LEVEL
PARTIAL 6

Port Authority
connecting people to life

CONTRACT NO. NSC-010E

DWG. NO. EL 023 SHT. 224

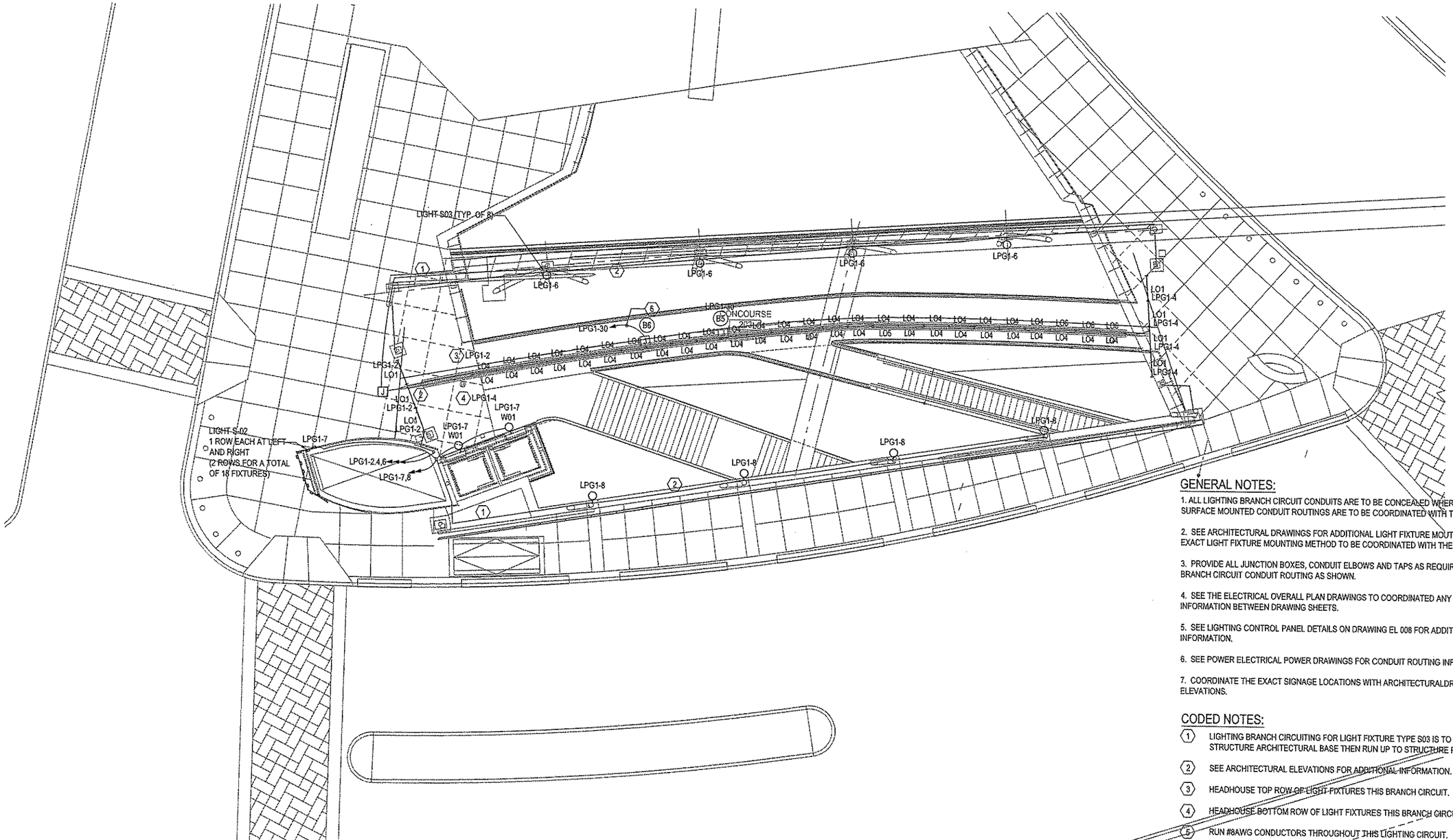

GENERAL NOTES:

1. ALL LIGHTING BRANCH CIRCUIT CONDUITS ARE TO BE CONCEALED WHERE POSSIBLE. ALL SURFACE MOUNTED CONDUIT ROUTINGS ARE TO BE COORDINATED WITH THE ARCHITECT.

2. SEE ARCHITECTURAL DRAWINGS FOR ADDITIONAL LIGHT FIXTURE MOUTING INFORMATION. EXACT LIGHT FIXTURE MOUNTING METHOD TO BE COORDINATED WITH THE ARCHITECT.

3. PROVIDE ALL JUNCTION BOXES, CONDUIT ELBOWS AND TAPS AS REQUIRED FOR THE BRANCH CIRCUIT CONDUIT ROUTING AS SHOWN.

4. SEE THE ELECTRICAL OVERALL PLAN DRAWINGS TO COORDINATED ANY PAGE BREAK INFORMATION BETWEEN DRAWING SHEETS.

5. SEE LIGHTING CONTROL PANEL DETAILS ON DRAWING EL 008 FOR ADDITIONAL INFORMATION.

6. SEE POWER ELECTRICAL POWER DRAWINGS FOR CONDUIT ROUTING INFORMATION.

7. COORDINATE THE EXACT SIGNAGE LOCATIONS WITH ARCHITECTURALDRAWINGS AND ELEVATIONS.

CODED NOTES:

1. LIGHTING BRANCH CIRCUITING FOR LIGHT FIXTURE TYPE S03 IS TO RUN IN THE STRUCTURE ARCHITECTURAL BASE THEN RUN UP TO STRUCTURE PEAK.
2. SEE ARCHITECTURAL ELEVATIONS FOR ADDITIONAL INFORMATION.
3. HEADHOUSE TOP ROW OF LIGHT FIXTURES THIS BRANCH CIRCUIT.
4. HEADHOUSE BOTTOM ROW OF LIGHT FIXTURES THIS BRANCH CIRCUIT.
5. RUN #8AWG CONDUCTORS THROUGHOUT THIS LIGHTING CIRCUIT.

LIGHTING PLAN - CONCOURSE LEVEL - PARTIAL 7 (1 / -)

The light /motion Collaborative
EDGE studio and Platfrann & Associates

EDGE studio
5441 Penn Avenue
Pittsburgh, PA 15206
tel: 412.345.5005
fax: 412.345.5006

Platfrann & Associates
223 Fourth Avenue
Pittsburgh, PA 15222
tel: 412.471.2472
fax: 412.471.2472

Allen & Shariff
ENGINEERING
700 River Avenue, Suite 333
Pittsburgh, PA 15212
Tel: 412.322.9280
Fax: 412.322.9281

NO.	DATE	DESCRIPTION

REVISIONS

THE PREPARATION OF THIS DOCUMENT HAS BEEN FINANCED IN PART THROUGH A GRANT FROM THE FEDERAL TRANSIT ADMINISTRATION, U.S. DEPARTMENT OF TRANSPORTATION, UNDER THE URBAN MASS TRANSPORTATION ACT OF 1964, AS AMENDED, FOR THE PORT AUTHORITY OF ALLEGHENY COUNTY, PENNSYLVANIA.

COMMONWEALTH OF PENNSYLVANIA REGISTERED PROFESSIONAL Anthony R. Molinaro JR. ENGINEER 41354-E

SIGNATURE

DMJM HARRIS | AECOM
FOUR GATEWAY CENTER
20TH FLOOR
PITTSBURGH, PA. 15222

APPROVED — DATE 4/29/08

DESIGNED	CJK
DRAWN	CJK
CHECKED	AEM
IN CHARGE	AEM
DATE	APRIL 29, 2008
SCALE	1/8"=1'-0"

8' 4' 0 8'

PORT AUTHORITY OF ALLEGHENY COUNTY
PITTSBURGH PENNSYLVANIA

NORTH SHORE CONNECTOR
GATEWAY STATION SHELL
LIGHTING PLAN - CONCOURSE LEVEL
PARTIAL 7

Port Authority
connecting people to life

CONTRACT NO. NSC-010E
DWG. NO. EL 024 SHT. 225

System No. C-AJ-5091

F RATING - 2 HR
T RATING - 1 HR
L RATING AT AMBIENT - 4 CFM/SQ FT
L RATING AT 400 F - LESS THAN 1 CFM/SQ FT

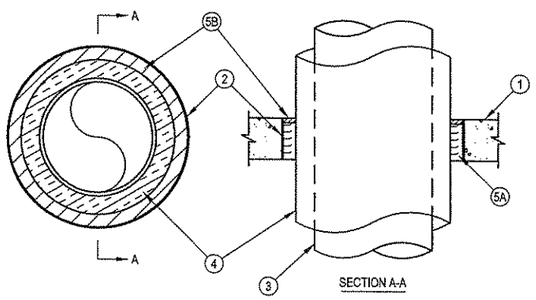

PIPE PENETRATION NOTES:

1. FLOOR OR WALL ASSEMBLY — MIN 4-1/2 IN. THICK REINFORCED LIGHTWEIGHT OR NORMAL WEIGHT (100-150 PCF) CONCRETE. WALL MAY ALSO BE CONSTRUCTED OF ANY UL CLASSIFIED CONCRETE BLOCKS*. MAX DIAM OF OPENING IS 19-1/2 IN.
2. METALLIC SLEEVE — NOM 20 IN. DIAM (OR SMALLER) SCHEDULE 10 (OR HEAVIER) STEEL PIPE.
3. THROUGH PENETRANTS — ONE METALLIC PIPE OR TUBING TO BE INSTALLED EITHER CONCENTRICALLY OR ECCENTRICALLY WITHIN THE FIRESTOP SYSTEM. PIPE OR TUBING TO BE RIGIDLY SUPPORTED ON BOTH SIDES OF FLOOR OR WALL ASSEMBLY. THE FOLLOWING TYPES AND SIZES OF METALLIC PIPES OR TUBING MAY BE USED:
   A. STEEL PIPE — NOM 12 IN. DIAM (OR SMALLER) SCHEDULE 10 (OR HEAVIER) STEEL PIPE.
   B. IRON PIPE — NOM 12 IN. DIAM (OR SMALLER) CAST OR DUCTILE IRON PIPE.
   C. COPPER PIPE — NOM 6 IN. DIAM (OR SMALLER) REGULAR (OR HEAVIER) COPPER PIPE.
   D. COPPER TUBING — NOM 6 IN. DIAM (OR SMALLER) TYPE L (OR HEAVIER) COPPER TUBING.
4. PIPE COVERING — NOM 2 IN. THICK HOLLOW CYLINDRICAL HEAVY DENSITY (MIN 3.5 PCF) GLASS FIBER UNITS JACKETED ON THE OUTSIDE WITH AN ALL-SERVICE JACKET. LONGITUDINAL JOINTS SEALED WITH METAL FASTENERS OR FACTORY-APPLIED, SELF-SEALING LAP TAPE. TRANSVERSE JOINTS SECURED WITH METAL FASTENERS OR WITH BUTT TAPE SUPPLIED WITH THE PRODUCT. THE ANNULAR SPACE BETWEEN THE INSULATED PIPE AND THE EDGE OF THE PERIPHERY OF THE OPENING SHALL BE MIN 1/2 IN. TO A MAX 2-1/4 IN.

4A. PIPE COVERING — (NOT SHOWN) — AS AN ALTERNATE TO ITEM 4, MAX 2 IN. THICK CYLINDRICAL CALCIUM SILICATE (MIN 14 PCF) UNITS SIZED TO THE OUTSIDE DIAM OF THE PIPE OR TUBE MAY BE USED. PIPE INSULATION SECURED WITH STAINLESS STEEL BANDS OR MIN 8 AWG STAINLESS STEEL WIRE SPACED MAX 12 IN. OC. THE ANNULAR SPACE SHALL BE MIN 1/2 IN. TO MAX 2-1/4 IN.

5. FIRESTOP SYSTEM — THE FIRESTOP SYSTEM SHALL CONSIST OF THE FOLLOWING:
   A. PACKING MATERIAL — MIN 4 IN. THICKNESS OF MIN 4 PCF MINERAL WOOL BATT INSULATION FIRMLY PACKED INTO OPENING AS A PERMANENT FORM. PACKING MATERIAL TO BE RECESSED FROM TOP SURFACE OF FLOOR OR FROM BOTH SURFACES OF WALL AS REQUIRED TO ACCOMMODATE THE REQUIRED THICKNESS OF FILL MATERIAL.
   B. FILL, VOID OR CAVITY MATERIAL* — SEALANT — MIN 1/2 IN. THICKNESS OF FILL MATERIAL APPLIED WITHIN THE ANNULUS, FLUSH WITH TOP SURFACE OF FLOOR OR WITH BOTH SURFACES OF WALL.

*BEARING THE UL CLASSIFICATION MARK

PIPE PENETRATION DETAIL - CONCRETE (1 -)

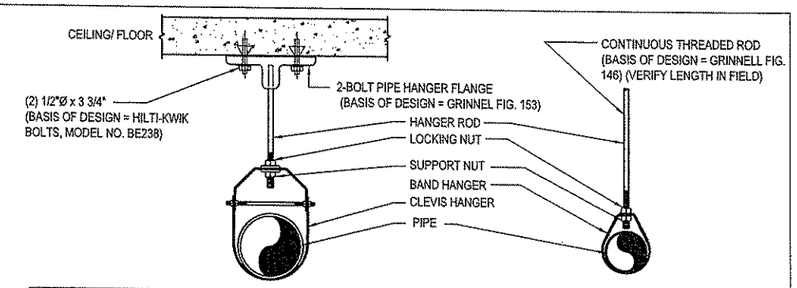

HANGER ROD SCHEDULE (3" AND LARGER)	
PIPE SIZE	ROD SIZE
UP TO 2"	3/8" DIA.
2 1/2" THRU 3"	1/2" DIA.
4" AND 5"	5/8"

HANGER ROD SPACING (2-1/2" AND SMALLER)	
PIPE SIZE	MAX. ALLOWABLE SPACING
1"	7'
1 1/4"	8'
1 1/2"	9'
2"	10'
2 1/2"	11'
3" THRU 8"	12'

SPRINKLER PIPE HANGER INSTALLATION DETAIL (2 -)

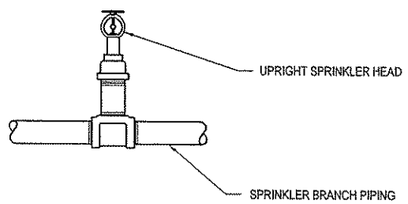

TYPICAL UPRIGHT PENDENT SPRINKLER (3 -)

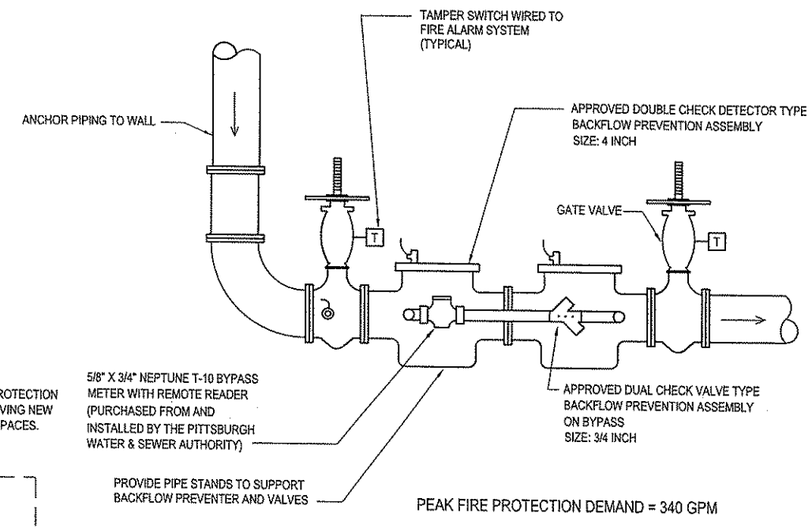

FIRE PROTECTION SERVICE BACKFLOW PREVENTER DETAIL (5 -)

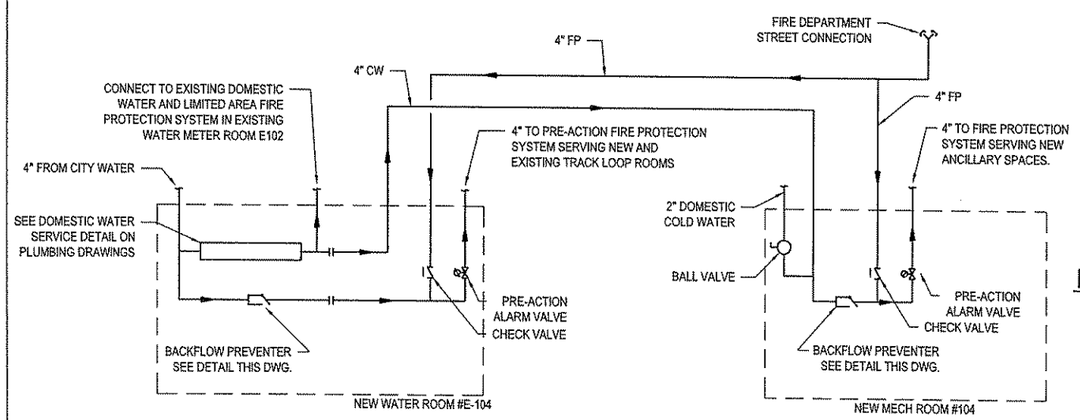

DOMESTIC WATER/FIRE PROTECTION SCHEMATIC (4 -)

FIRE PROTECTION NOTES AND DESIGN PARAMETERS:

1. THESE DRAWINGS SHOW THE GENERAL INTENT OF THE FIRE SUPPRESSION SYSTEM. THE CONTRACTOR SHALL PROVIDE FULL SPRINKLER AND HOSE VALVE COVERAGE IN THE NOTED AREAS.
2. CONTRACTOR SHALL PERFORM A NEW WATER FLOW TEST AT THE NEAREST TWO FIRE HYDRANTS TO THE PROJECT SITE.
3. PROJECT SCOPE INCLUDES: A PRE-ACTION SPRINKLER SYSTEM IN THE OCCUPIED SPACES COMPLETE WITH A FIRE DEPARTMENT CONNECTION; A MANUAL DRY STANDPIPE SYSTEM COMPLETE WITH FIRE DEPARTMENT CONNECTION; A MANUAL DRY WATER CURTAIN SYSTEM AT THE TRAIN BOARDING AREAS COMPLETE WITH FIRE DEPARTMENT CONNECTION; AND A MANUAL DRY FIRE DEPARTMENT CONNECTION WITH PIPING TO FEED THE MANUAL DRY STANDPIPE LOCATED IN THE TUNNEL CONSTRUCTED UNDER A SEPARATE CONTRACT.
4. THE CONTRACTOR SHALL HYDRAULICALLY CALCULATE AND DESIGN THE SUPPRESSION SYSTEMS BASED ON THE RESULTS OF THE NEW WATER FLOW TEST. A 10 PERCENT PRESSURE FACTOR SHALL BE USED BETWEEN THE FLOW TEST RESULTS AND THE DESIGN PRESSURE.
5. DESIGN STANDARDS SHALL INCLUDE: INTERNATIONAL BUILDING CODE - CURRENTLY ENFORCED EDITION; NFPA -13 AND 14 - CURRENTLY ENFORCED EDITIONS.
6. GENERAL BUILDING CLASSIFICATION: ORDINARY HAZARD - GROUP 1
7. DESIGN DENSITY: 0.15 GPM/SQ. FT. OVER 1950 SQ. FT. 130 SQ. FT. MINIMUM PER SPRINKLER.
8. LOCATE SPRINKLERS AS NECESSARY TO MEET NFPA-13 SPACING RULES AS THEY APPLY TO NEW BUILDING CONSTRUCTION OF NON-COMBUSTIBLE CONSTRUCTION.
9. PROVIDE A COMPLETE SET OF LAYOUT DRAWINGS AND HYDRAULIC CALCULATIONS. SUBMIT (3) COPIES OF DRAWINGS AND CALCULATIONS TO THE CITY AND OWNERS INSURANCE COMPANY FOR REVIEW AND APPROVAL PRIOR TO START OF CONSTRUCTION.
10. ALL SYSTEM COMPONENTS SHALL BE UL LISTED AND FM/GLOBAL APPROVED.
11. PROVIDE INSPECTORS TEST VALVE AT MOST REMOTE AREA AND AUXILIARY DRAINS AS NECESSITATED BY THE SYSTEM LAYOUT.
12. PROVIDE A STANDPIPE FOR USE DURING CONSTRUCTION IN COMPLIANCE WITH SECTION 9 OF THE BUILDING CODE. WHEN EXISTING SYSTEMS ARE SHUT DOWN FOR CONSTRUCTION, PROVIDE FIRE WATCH SERVICES UNTIL THE SUPPRESSION SYSTEM IS REACTIVATED.
13. COORDINATE FINAL LOCATION OF SPRINKLERS WITH FINAL LOCATION OF ALL LIGHTS, DUCTWORK, DIFFUSERS, STRUCTURAL ELEMENTS AND CEILING ELEVATIONS.
14. CONTRACTOR SHALL OBTAIN ALL NECESSARY FIRE PROTECTION SYSTEMS PERMITS, TESTS, APPROVALS, AND INSPECTIONS AS PART OF THE SCOPE OF THIS PROJECT.

The light /motion Collaborative
EDGE studio and Pfaffmann & Associates
EDGE studio: 5411 Penn Avenue, Pittsburgh, PA 15206, tel: 412.345.5005, fax: 412.345.5006
Pfaffmann & Associates: 309 Fourth Avenue, Pittsburgh, PA 15222, tel: 412.471.2470, fax: 412.471.2472

Allen & Shariff
ENGINEERING
700 River Avenue, Suite 333
Pittsburgh, PA 15212
Tel: 412.322.9280
Fax: 412.322.9281

NO.	DATE	DESCRIPTION

REVISIONS

THE PREPARATION OF THIS DOCUMENT HAS BEEN FINANCED IN PART THROUGH A GRANT FROM THE FEDERAL TRANSIT ADMINISTRATION, U.S. DEPARTMENT OF TRANSPORTATION, UNDER THE URBAN MASS TRANSPORTATION ACT OF 1964, AS AMENDED, FOR THE PORT AUTHORITY OF ALLEGHENY COUNTY, PENNSYLVANIA.

COMMONWEALTH OF PENNSYLVANIA REGISTERED PROFESSIONAL ENGINEER Anthony E. Molinaro 41354-E

SIGNATURE

DMJM HARRIS | AECOM
FOUR GATEWAY CENTER
20TH FLOOR
PITTSBURGH, PA. 15222

APPROVED — DATE 4/29/08

DESIGNED	JBH
DRAWN	JBH
CHECKED	AEM
IN CHARGE	AEM
DATE	APRIL 29, 2008
SCALE	NOT TO SCALE

PORT AUTHORITY OF ALLEGHENY COUNTY
PITTSBURGH PENNSYLVANIA

NORTH SHORE CONNECTOR
GATEWAY STATION SHELL
FIRE PROTECTION DETAILS

Port Authority connecting people to life

CONTRACT NO. NSC-010P
DWG. NO. FP001 SHT. 257

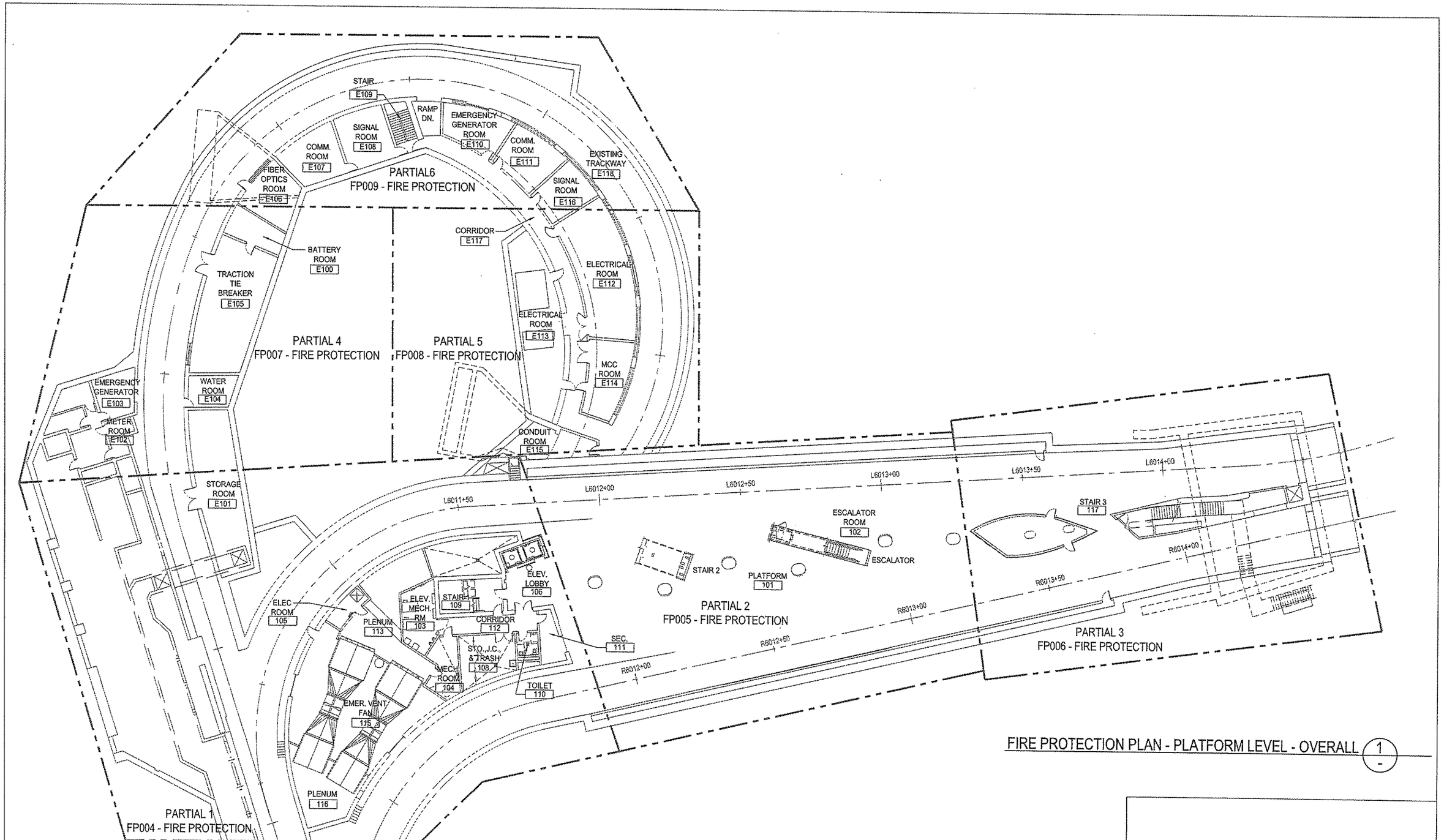

FIRE PROTECTION PLAN - PLATFORM LEVEL - OVERALL (1 / -)

The light /motion Collaborative
EDGE studio and Pfaffmann & Associates

EDGE studio
5418 Penn Avenue
Pittsburgh, PA 15206
tel: 412.345.5005
fax: 412.345.5006

Pfaffmann & Associates
223 Fourth Avenue
Pittsburgh, PA 15222
tel: 412.471.2470
fax: 412.471.2472

Allen & Shariff
ENGINEERING
700 River Avenue, Suite 333
Pittsburgh, PA 15212
Tel: 412.322.9280
Fax: 412.322.9281

NO.	DATE	DESCRIPTION

REVISIONS

THE PREPARATION OF THIS DOCUMENT HAS BEEN FINANCED IN PART THROUGH A GRANT FROM THE FEDERAL TRANSIT ADMINISTRATION, U.S. DEPARTMENT OF TRANSPORTATION, UNDER THE URBAN MASS TRANSPORTATION ACT OF 1964, AS AMENDED, FOR THE PORT AUTHORITY OF ALLEGHENY COUNTY, PENNSYLVANIA.

COMMONWEALTH OF PENNSYLVANIA
REGISTERED PROFESSIONAL
Anthony P. Molinaro
ENGINEER
41354-E
SIGNATURE

DMJM HARRIS | AECOM
FOUR GATEWAY CENTER
20TH FLOOR
PITTSBURGH, PA. 15222

David P. Harris 4/29/08
APPROVED DATE

DESIGNED	JBH
DRAWN	JBH
CHECKED	AEM
IN CHARGE	AEM
DATE APRIL 29, 2008	
SCALE 1/16"=1'-0"	

16' 8' 0 16'

PORT AUTHORITY OF ALLEGHENY COUNTY
PITTSBURGH PENNSYLVANIA

NORTH SHORE CONNECTOR
GATEWAY STATION SHELL
FIRE PROTECTION PLAN - PLATFORM LEVEL - OVERALL

Port Authority
connecting people to life

CONTRACT NO. NSC-010P
DWG. NO. FP002 SHT. 258

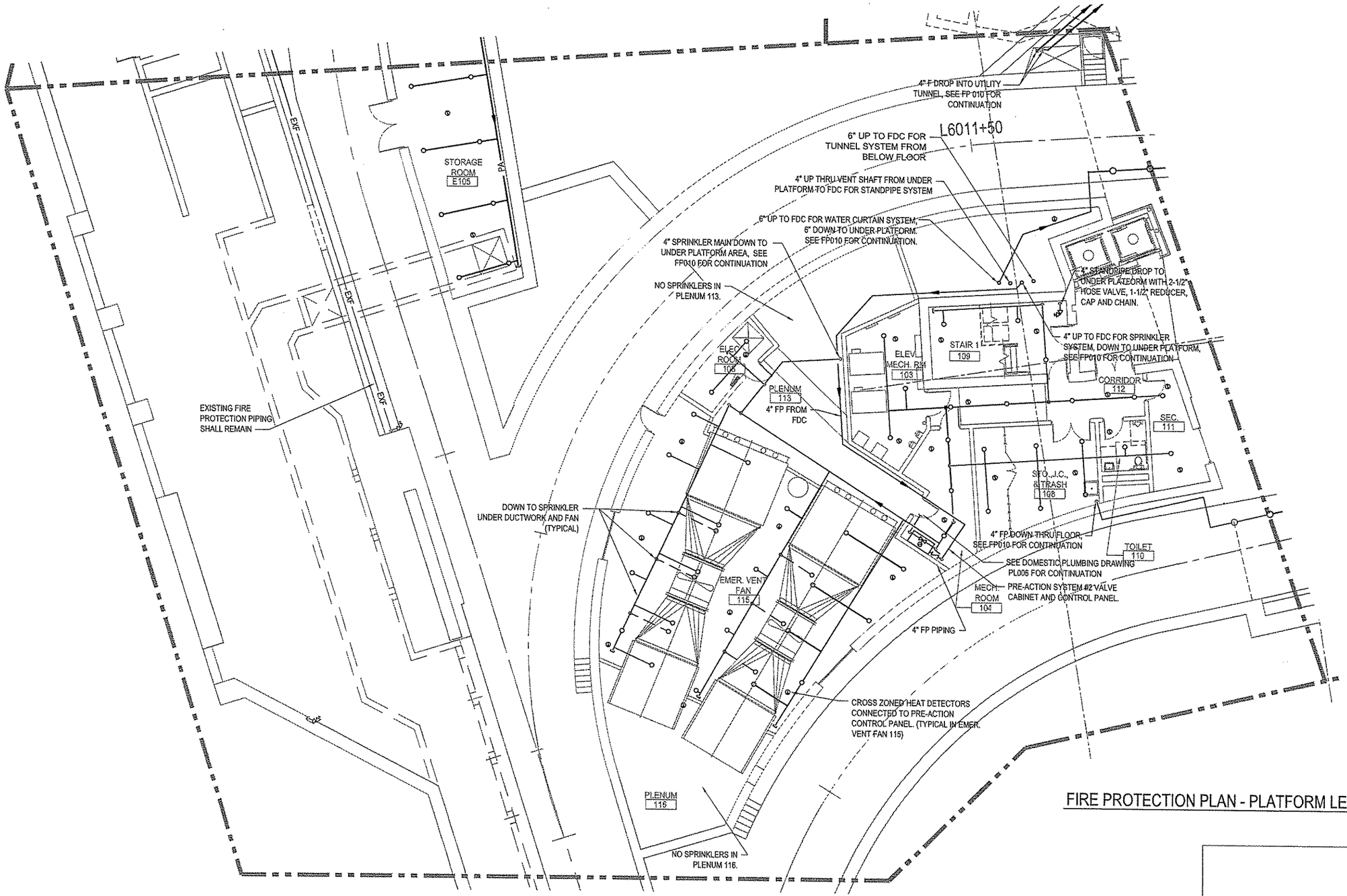

FIRE PROTECTION PLAN - PLATFORM LEVEL - PARTIAL 1 (1 / -)

The light /motion Collaborative
EDGE studio and Pfaffmann & Associates

EDGE studio
5411 Penn Avenue
Pittsburgh, PA 15206
tel: 412.345.5005
fax: 412.345.5006

Pfaffmann & Associates
223 Fourth Avenue
Pittsburgh, PA 15222
tel: 412.471.2470
fax: 412.471.2472

Allen & Shariff
ENGINEERING
700 River Avenue, Suite 333
Pittsburgh, PA 15212
Tel: 412.322.9280
Fax: 412.322.9281

NO.	DATE	DESCRIPTION

REVISIONS

THE PREPARATION OF THIS DOCUMENT HAS BEEN FINANCED IN PART THROUGH A GRANT FROM THE FEDERAL TRANSIT ADMINISTRATION, U.S. DEPARTMENT OF TRANSPORTATION, UNDER THE URBAN MASS TRANSPORTATION ACT OF 1964, AS AMENDED, FOR THE PORT AUTHORITY OF ALLEGHENY COUNTY, PENNSYLVANIA.

COMMONWEALTH OF PENNSYLVANIA
REGISTERED PROFESSIONAL ENGINEER
Anthony K. Mollica Jr.
41354-E

SIGNATURE

DMJM HARRIS | AECOM
FOUR GATEWAY CENTER
20TH FLOOR
PITTSBURGH, PA. 15222

4/29/08
APPROVED DATE

DESIGNED	JBH
DRAWN	JBH
CHECKED	AEM
IN CHARGE	AEM
DATE	APRIL 29, 2008
SCALE	1/8"=1'-0"

8' 4' 0 8'

PORT AUTHORITY OF ALLEGHENY COUNTY
PITTSBURGH PENNSYLVANIA

NORTH SHORE CONNECTOR
GATEWAY STATION SHELL
FIRE PROTECTION PLAN - PLATFORM LEVEL
PARTIAL1

Port Authority
connecting people to life

CONTRACT NO. NSC-010P
DWG. NO. FP003
SHT. 259

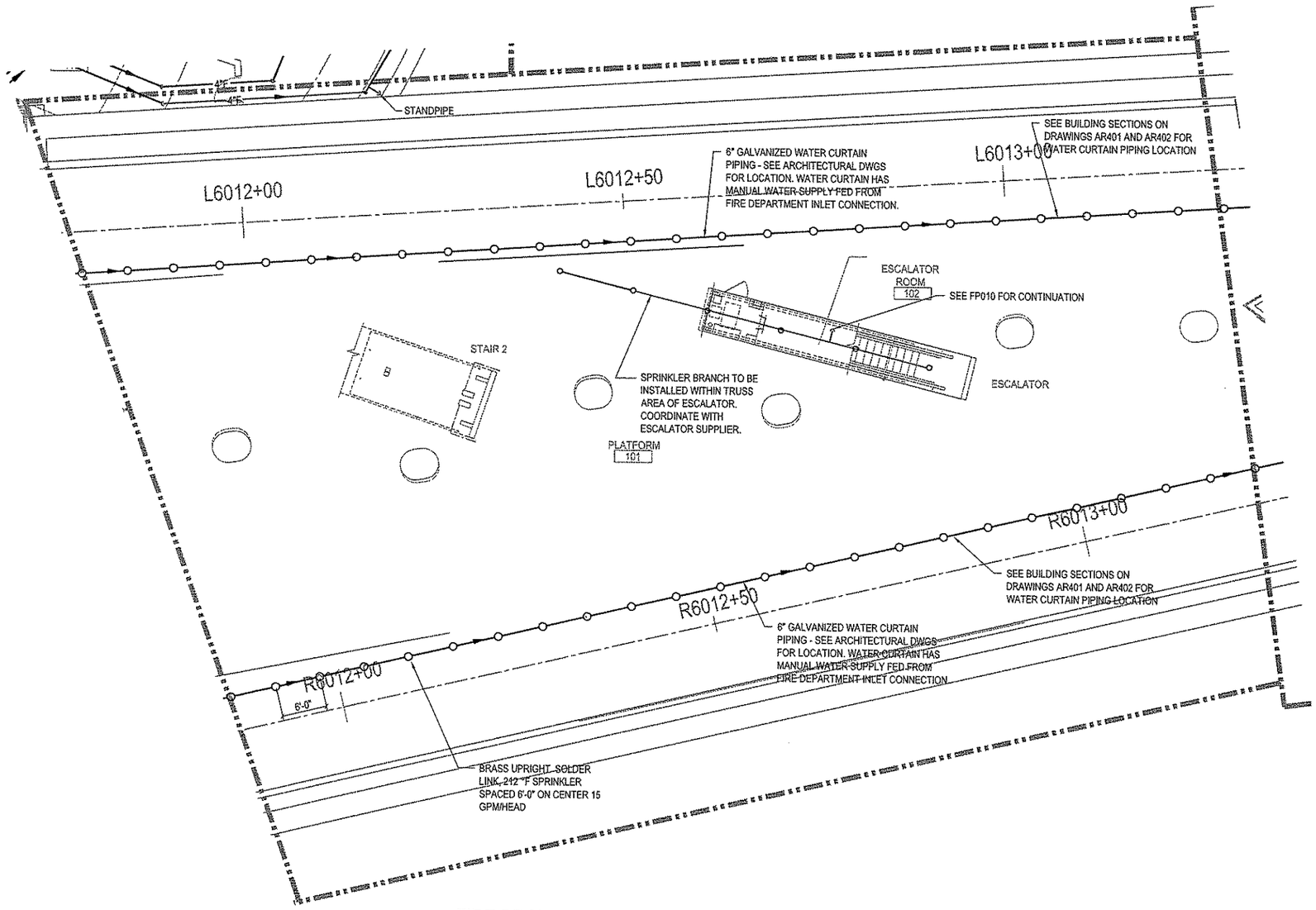

FIRE PROTECTION PLAN - PLATFORM LEVEL - PARTIAL 2 (1)

The light / motion Collaborative
EDGE studio and Platmann & Associates

EDGE studio
5411 Penn Avenue
Pittsburgh, PA 15206
tel: 412.345.5005
fax: 412.345.5006

Platmann & Associates
202 Fourth Avenue
Pittsburgh, PA 15222
tel: 412.471.2410
fax: 412.471.2472

Allen & Shariff
ENGINEERING
700 River Avenue, Suite 333
Pittsburgh, PA 15212
Tel: 412.322.9280
Fax: 412.322.9281

NO.	DATE	DESCRIPTION

REVISIONS

THE PREPARATION OF THIS DOCUMENT HAS BEEN FINANCED IN PART THROUGH A GRANT FROM THE FEDERAL TRANSIT ADMINISTRATION, U. S. DEPARTMENT OF TRANSPORTATION, UNDER THE URBAN MASS TRANSPORTATION ACT OF 1964, AS AMENDED, FOR THE PORT AUTHORITY OF ALLEGHENY COUNTY, PENNSYLVANIA.

COMMONWEALTH OF PENNSYLVANIA
REGISTERED PROFESSIONAL ENGINEER
Anthony P. Molinaro
41354-E

SIGNATURE

DMJM HARRIS | AECOM
FOUR GATEWAY CENTER
20TH FLOOR
PITTSBURGH, PA. 15222

APPROVED 4/29/08
DATE

DESIGNED	JBH
DRAWN	JBH
CHECKED	AEM
IN CHARGE	AEM
DATE APRIL 29, 2008	
SCALE 1/8"=1'-0"	
8' 4' 0 8'	

PORT AUTHORITY OF ALLEGHENY COUNTY
PITTSBURGH PENNSYLVANIA

NORTH SHORE CONNECTOR
GATEWAY STATION SHELL
FIRE PROTECTION PLAN - PLATFORM LEVEL
PARTIAL 2

Port Authority
connecting people to life

CONTRACT NO. NSC-010P
DWG. NO. FP004 SHT. 260

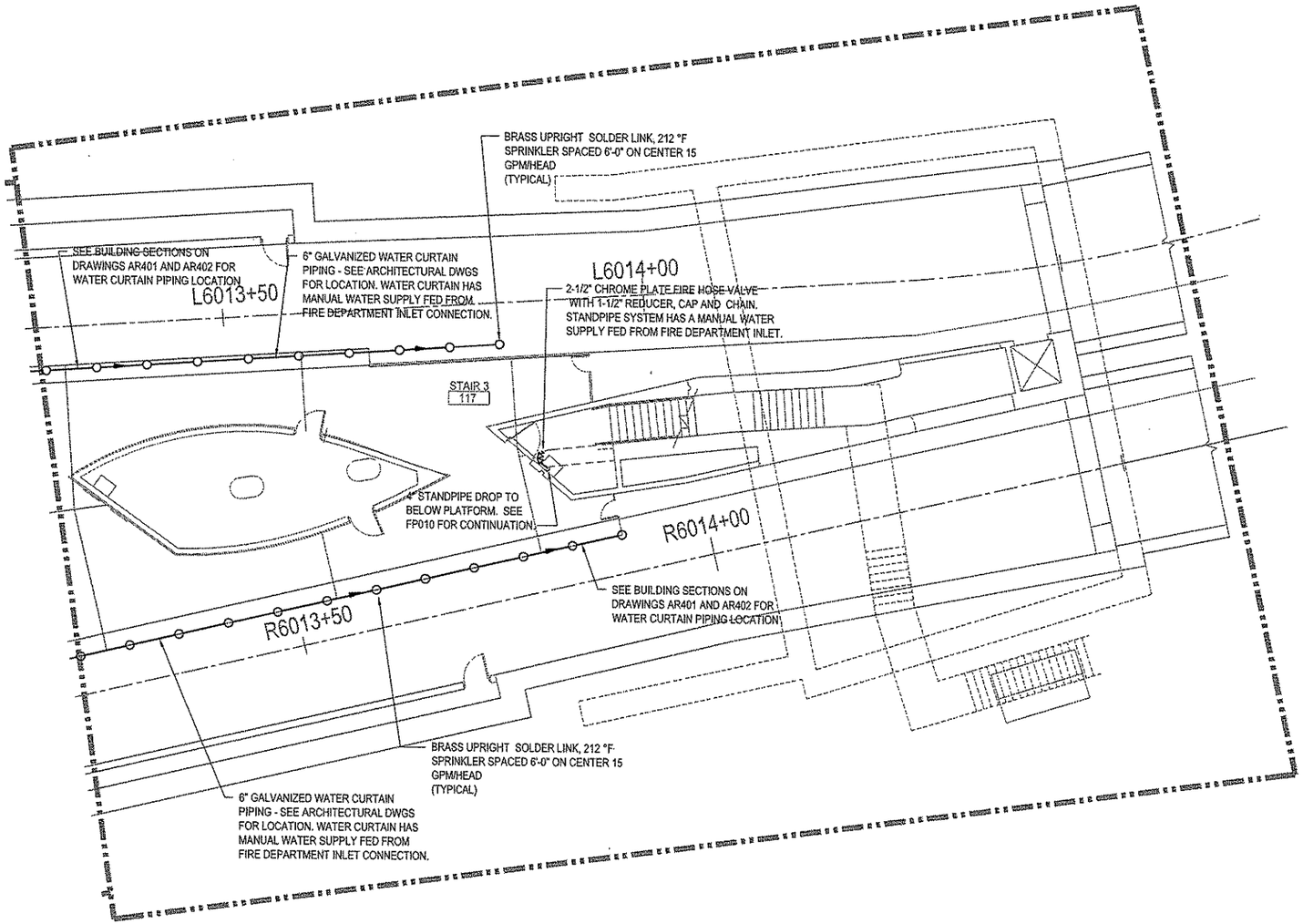

FIRE PROTECTION PLAN - PLATFORM LEVEL - PARTIAL 3 (1 / -)

The light /motion Collaborative
EDGE studio and Pfaffmann & Associates

EDGE studio
2411 Penn Avenue
Pittsburgh, PA 15206
tel: 412.345.5000
fax: 412.345.5000

Pfaffmann & Associates
223 Fourth Avenue
Pittsburgh, PA 15222
tel: 412.471.2410
fax: 412.471.2472

Allen & Shariff
ENGINEERING
700 River Avenue, Suite 333
Pittsburgh, PA 15212
Tel: 412.322.9280
Fax: 412.322.9281

NO.	DATE	DESCRIPTION

REVISIONS

THE PREPARATION OF THIS DOCUMENT HAS BEEN FINANCED IN PART THROUGH A GRANT FROM THE FEDERAL TRANSIT ADMINISTRATION, U.S. DEPARTMENT OF TRANSPORTATION, UNDER THE URBAN MASS TRANSPORTATION ACT OF 1964, AS AMENDED, FOR THE PORT AUTHORITY OF ALLEGHENY COUNTY, PENNSYLVANIA.

COMMONWEALTH OF PENNSYLVANIA REGISTERED PROFESSIONAL ENGINEER Anthony R. Molinaro Jr. 41354-E

SIGNATURE

DMJM HARRIS | AECOM
FOUR GATEWAY CENTER
20TH FLOOR
PITTSBURGH, PA. 15222

David P. Hung 4/29/08
APPROVED DATE

DESIGNED	JBH
DRAWN	JBH
CHECKED	AEM
IN CHARGE	AEM
DATE APRIL 29, 2008	
SCALE	1/8"=1'-0"

8' 4' 0 8'

PORT AUTHORITY OF ALLEGHENY COUNTY
PITTSBURGH PENNSYLVANIA

NORTH SHORE CONNECTOR
GATEWAY STATION SHELL
FIRE PROTECTION PLAN - PLATFORM LEVEL
PARTIAL 3

Port Authority
connecting people to life

CONTRACT NO. NSC-010P
DWG. NO. FP005 SHT. 261

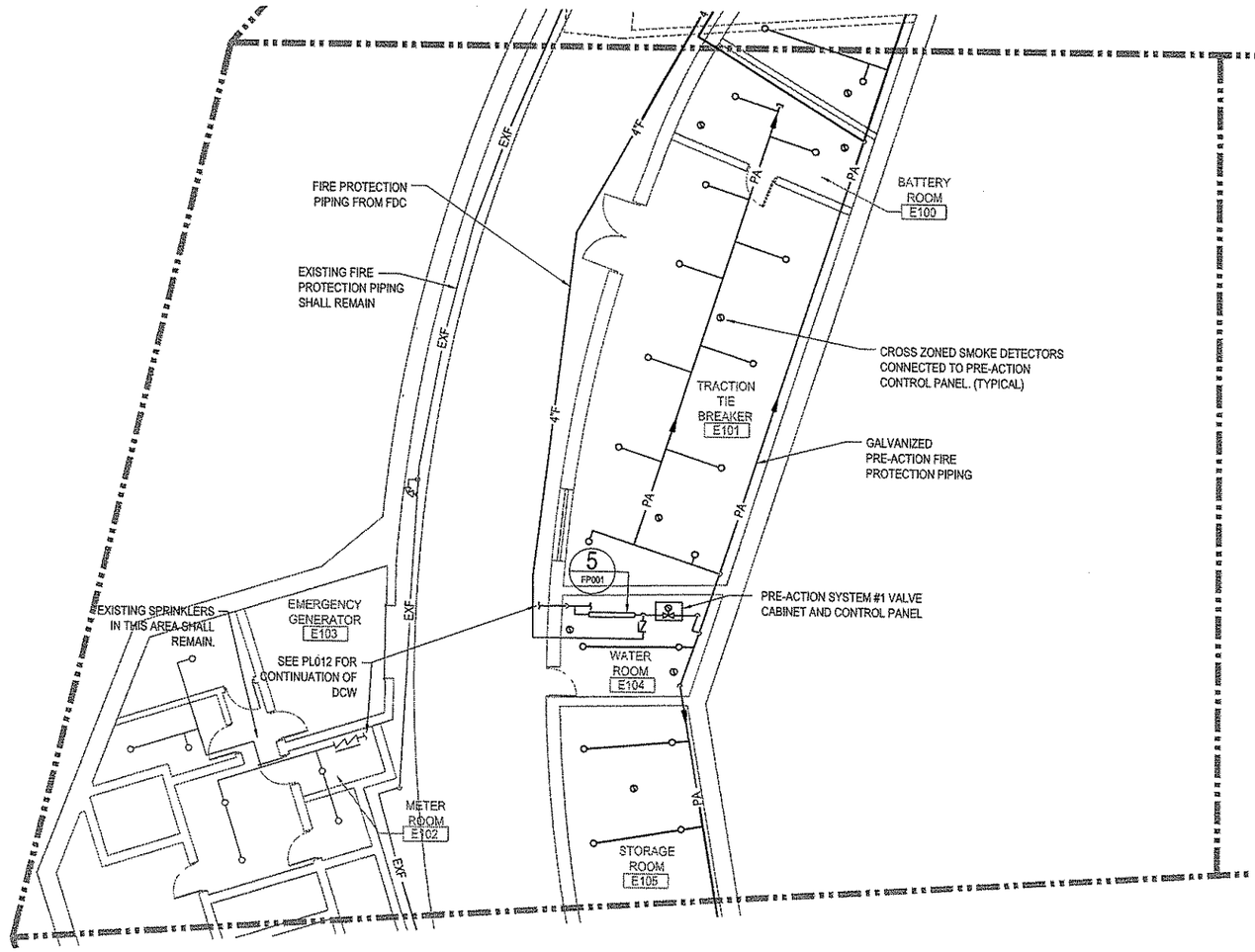

FIRE PROTECTION PLAN - PLATFORM LEVEL - PARTIAL 4 (1)

The light /motion Collaborative
EDGE studio and Platmann & Associates

EDGE studio
5411 Penn Avenue
Pittsburgh, PA 15206
tel: 412.345.5005
fax: 412.345.5006

Platmann & Associates
223 Fourth Avenue
Pittsburgh, PA 15222
tel: 412.471.2472
fax: 412.471.2472

Allen & Shariff
ENGINEERING
700 River Avenue, Suite 333
Pittsburgh, PA 15212
Tel: 412.322.9280
Fax: 412.322.9281

NO.	DATE	DESCRIPTION

REVISIONS

THE PREPARATION OF THIS DOCUMENT HAS BEEN FINANCED IN PART THROUGH A GRANT FROM THE FEDERAL TRANSIT ADMINISTRATION, U.S. DEPARTMENT OF TRANSPORTATION, UNDER THE URBAN MASS TRANSPORTATION ACT OF 1964, AS AMENDED, FOR THE PORT AUTHORITY OF ALLEGHENY COUNTY, PENNSYLVANIA.

COMMONWEALTH OF PENNSYLVANIA
REGISTERED PROFESSIONAL ENGINEER
Anthony P. Molinaro
41354-E

SIGNATURE

DMJM HARRIS | AECOM
FOUR GATEWAY CENTER
20TH FLOOR
PITTSBURGH, PA. 15222

APPROVED 4/29/08
DATE

DESIGNED	JBH
DRAWN	JBH
CHECKED	AEM
IN CHARGE	AEM
DATE APRIL 29, 2008	
SCALE 1/8"=1'-0"	

8' 4' 0 8'

PORT AUTHORITY OF ALLEGHENY COUNTY
PITTSBURGH PENNSYLVANIA

NORTH SHORE CONNECTOR
GATEWAY STATION SHELL
FIRE PROTECTION PLAN - PLATFORM LEVEL
PARTIAL 4

Port Authority
connecting people to life

CONTRACT NO. NSC-010P
DWG. NO. FP006 SHT. 262

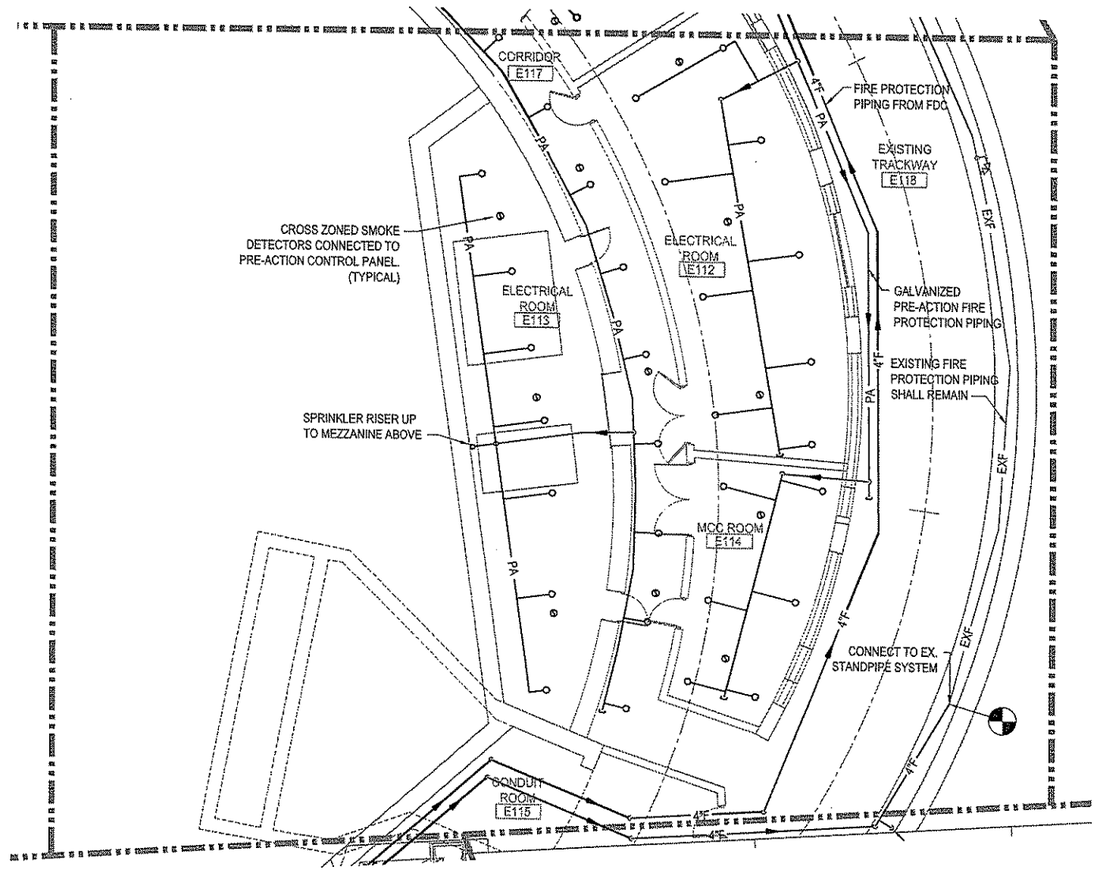

FIRE PROTECTION PLAN - PLATFORM LEVEL - PARTIAL 5 (1)

The light / motion Collaborative
EDGE studio and Pfaffmann & Associates

EDGE studio
5411 Penn Avenue
Pittsburgh, PA 15206
tel: 412.363.5005
fax: 412.363.5006

Pfaffmann & Associates
229 Fourth Avenue
Pittsburgh, PA 15222
tel: 412.471.2470
fax: 412.471.2472

Allen & Shariff
ENGINEERING
700 River Avenue, Suite 333
Pittsburgh, PA 15212
Tel: 412.322.9280
Fax: 412.322.9281

NO.	DATE	DESCRIPTION

REVISIONS

THE PREPARATION OF THIS DOCUMENT HAS BEEN FINANCED IN PART THROUGH A GRANT FROM THE FEDERAL TRANSIT ADMINISTRATION, U.S. DEPARTMENT OF TRANSPORTATION, UNDER THE URBAN MASS TRANSPORTATION ACT OF 1964, AS AMENDED, FOR THE PORT AUTHORITY OF ALLEGHENY COUNTY, PENNSYLVANIA.

COMMONWEALTH OF PENNSYLVANIA
REGISTERED PROFESSIONAL
Anthony P. Molinaro
ENGINEER
41354-E

SIGNATURE

DMJM HARRIS | AECOM
FOUR GATEWAY CENTER
20TH FLOOR
PITTSBURGH, PA. 15222

APPROVED — DATE 4/29/08

DESIGNED	JBH
DRAWN	JBH
CHECKED	AEM
IN CHARGE	AEM
DATE	APRIL 29, 2008
SCALE	1/8"=1'-0"

8' 4' 0 8'

PORT AUTHORITY OF ALLEGHENY COUNTY
PITTSBURGH PENNSYLVANIA

NORTH SHORE CONNECTOR
GATEWAY STATION SHELL
FIRE PROTECTION PLAN - PLATFORM LEVEL
PARTIAL 5

Port Authority
connecting people to life

CONTRACT NO. NSC-010P
DWG. NO. FP007
SHT. 263

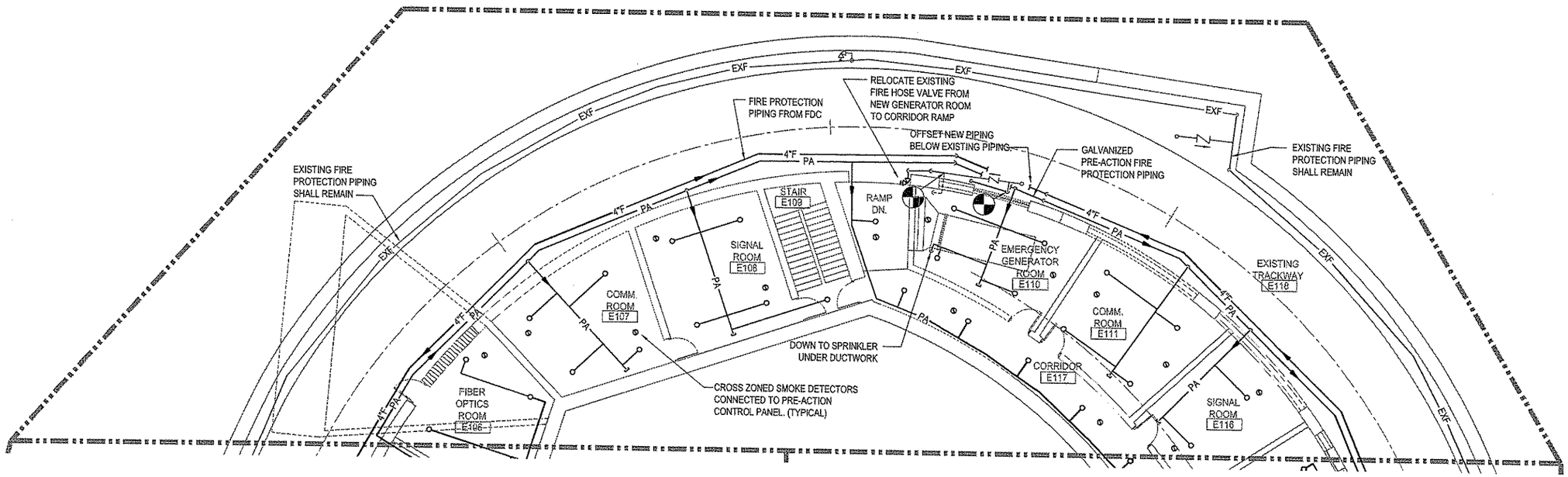

FIRE PROTECTION PLAN - PLATFORM LEVEL - PARTIAL 6 (1)

The light /motion Collaborative
EDGE studio and Pfaffmann & Associates

EDGE studio
5411 Penn Avenue
Pittsburgh, PA 15206
tel: 412.345.5005
fax: 412.345.5055

Pfaffmann & Associates
229 Fourth Avenue
Pittsburgh, PA 15222
tel: 412.471.2419
fax: 412.471.2472

Allen & Shariff
ENGINEERING
700 River Avenue, Suite 333
Pittsburgh, PA 15212
Tel: 412.322.9280
Fax: 412.322.9281

NO.	DATE	DESCRIPTION

REVISIONS

THE PREPARATION OF THIS DOCUMENT HAS BEEN FINANCED IN PART THROUGH A GRANT FROM THE FEDERAL TRANSIT ADMINISTRATION, U.S. DEPARTMENT OF TRANSPORTATION, UNDER THE URBAN MASS TRANSPORTATION ACT OF 1964, AS AMENDED, FOR THE PORT AUTHORITY OF ALLEGHENY COUNTY, PENNSYLVANIA.

COMMONWEALTH OF PENNSYLVANIA REGISTERED PROFESSIONAL Anthony E. Molinaro ENGINEER 41354-E

SIGNATURE

DMJM HARRIS | AECOM
FOUR GATEWAY CENTER
20TH FLOOR
PITTSBURGH, PA. 15222

APPROVED 4/29/08 DATE

DESIGNED	JBH
DRAWN	JBH
CHECKED	AEM
IN CHARGE	AEM
DATE APRIL 29, 2008	
SCALE 1/8"=1'-0"	

8' 4' 0 8'

PORT AUTHORITY OF ALLEGHENY COUNTY
PITTSBURGH PENNSYLVANIA

NORTH SHORE CONNECTOR
GATEWAY STATION SHELL
FIRE PROTECTION PLAN - PLATFORM LEVEL
PARTIAL 6

Port Authority connecting people to life

CONTRACT NO. NSC-010P

DWG. NO. FP008 SHT. 264

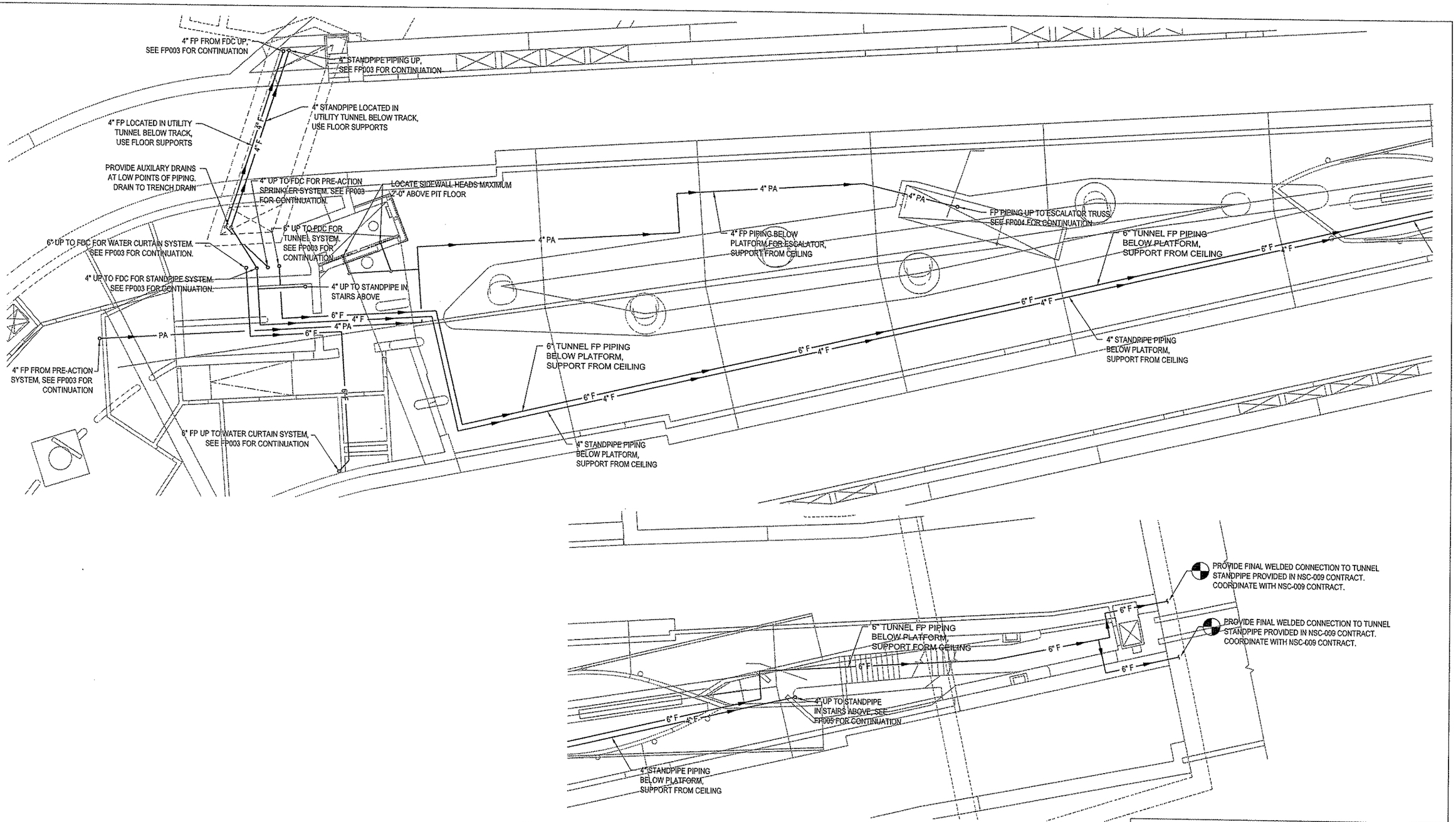

FIRE PROTECTION PLAN - UNDER PLATFORM (1 / -)

The light /motion Collaborative
EDGE studio and Pfaffmann & Associates

EDGE studio
5411 Penn Avenue
Pittsburgh, PA 15206
tel: 412/345.5005
fax: 412/345.5006

Pfaffmann & Associates
703 Fourth Avenue
Pittsburgh, PA 15222
tel: 412/471.2419
fax: 412/471.2472

Allen & Shariff
ENGINEERING
700 River Avenue, Suite 333
Pittsburgh, PA 15212
Tel: 412.322.9280
Fax: 412.322.9281

NO.	DATE	DESCRIPTION

REVISIONS

THE PREPARATION OF THIS DOCUMENT HAS BEEN FINANCED IN PART THROUGH A GRANT FROM THE FEDERAL TRANSIT ADMINISTRATION, U.S. DEPARTMENT OF TRANSPORTATION, UNDER THE URBAN MASS TRANSPORTATION ACT OF 1964, AS AMENDED, FOR THE PORT AUTHORITY OF ALLEGHENY COUNTY, PENNSYLVANIA.

COMMONWEALTH OF PENNSYLVANIA REGISTERED PROFESSIONAL Anthony R. Mollenauer 41354-E

SIGNATURE

DMJM HARRIS | AECOM
FOUR GATEWAY CENTER
20TH FLOOR
PITTSBURGH, PA. 15222

David P. Davis 4/29/08

APPROVED DATE

DESIGNED	JBH
DRAWN	JBH
CHECKED	AEM
IN CHARGE	AEM
DATE	APRIL 29, 2008
SCALE	1/8"=1'-0"

8' 4' 0 8'

PORT AUTHORITY OF ALLEGHENY COUNTY
PITTSBURGH PENNSYLVANIA

NORTH SHORE CONNECTOR
GATEWAY STATION SHELL
FIRE PROTECTION PLAN - UNDER PLATFORM

Port Authority
connecting people to life

CONTRACT NO. NSC-010P

DWG. NO. FP010 SHT. 266

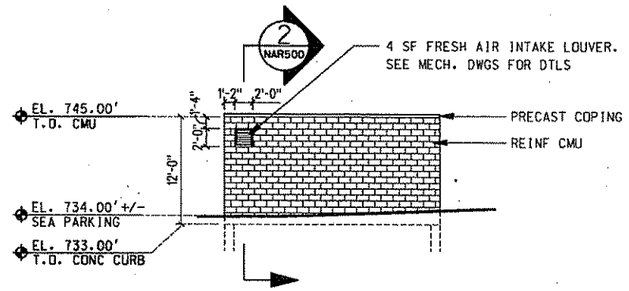

SOUTH ELEVATION 3 NAR104

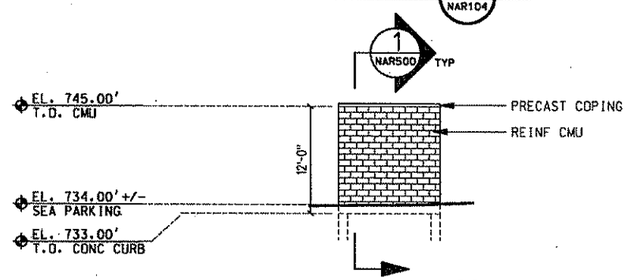

EAST / WEST ELEVATION 4 NAR104

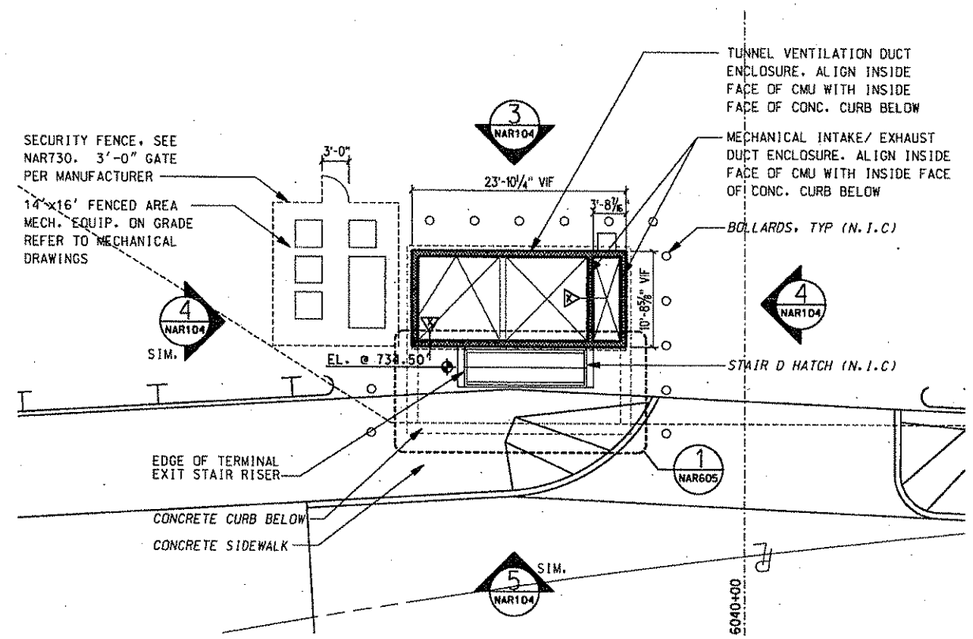

STREET LEVEL PLAN 1 NAR101

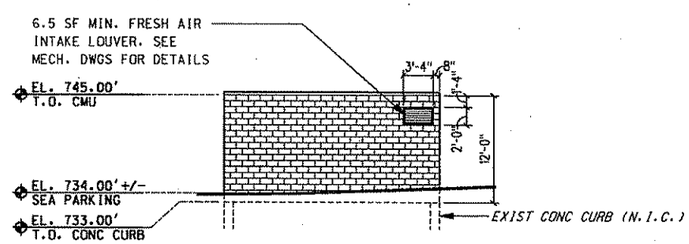

NORTH ELEVATION 5 NAR104

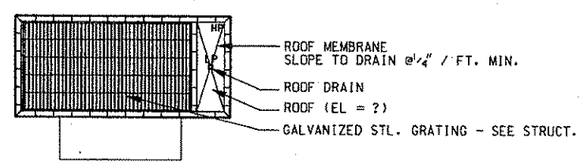

ROOF PLAN 2 NAR100

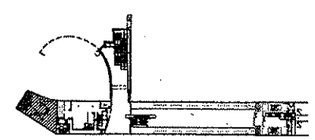

100% SUBMISSION

COOPER CARRY
50 WEST 17TH STREET
12TH FLOOR
NEW YORK, NY 10011
212-691-0271
WWW.COOPERCARRY.COM

NO.	DATE	DESCRIPTION

REVISIONS

THE PREPARATION OF THIS DOCUMENT HAS BEEN FINANCED IN PART THROUGH A GRANT FROM THE FEDERAL TRANSIT ADMINISTRATION, U.S. DEPARTMENT OF TRANSPORTATION, UNDER THE URBAN MASS TRANSPORTATION ACT OF 1964, AS AMENDED, FOR THE PORT AUTHORITY OF ALLEGHENY COUNTY, PENNSYLVANIA.

SIGNATURE

DMJM HARRIS | AECOM
FOUR GATEWAY CENTER
20TH FLOOR
PITTSBURGH, PA 15222

APPROVED DATE

DESIGNED	JBW
DRAWN	AW, BM, CF
CHECKED	LC
IN CHARGE	CR
DATE	APR. 03, 2008
SCALE	0' 4' 8' 16'

PORT AUTHORITY OF ALLEGHENY COUNTY
PITTSBURGH PENNSYLVANIA

NORTH SHORE CONNECTOR
NORTH SIDE STATION FINISHES
PARTIAL STREET LEVEL PLAN A
VENTILATION BULKHEAD AT STAIR 'D'

Port Authority

CONTRACT NO. NSC-011
DWG. NO. NAR104 SHT. 77

$DATE$ $TIME$
\\192.168.25.13\PROJECTS\20625\Drawings\NAR104.dwg

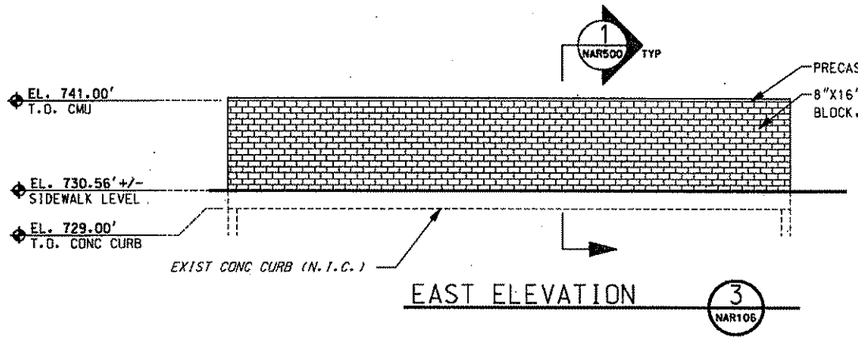

EAST ELEVATION 3 NAR106

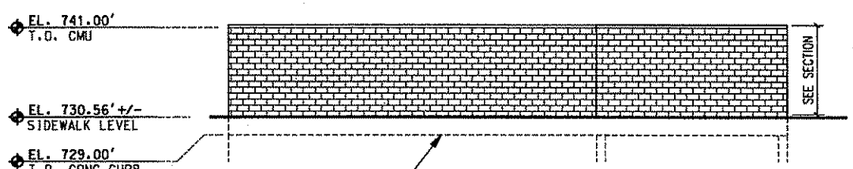

WEST ELEVATION 4 NAR106

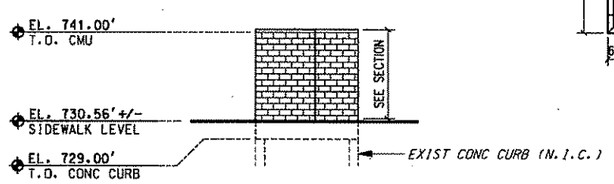

NORTH ELEVATION 5 NAR106

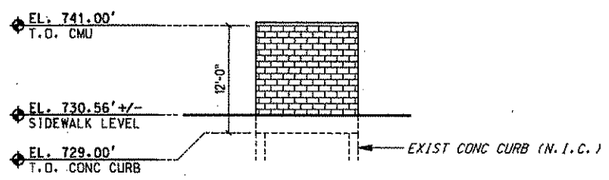

SOUTH ELEVATION 6 NAR106

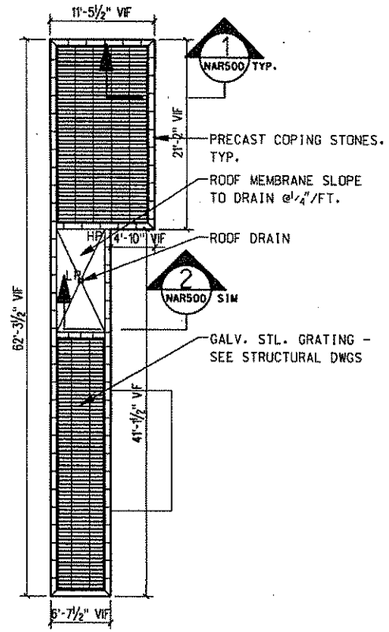

ROOF PLAN 2 NAR100

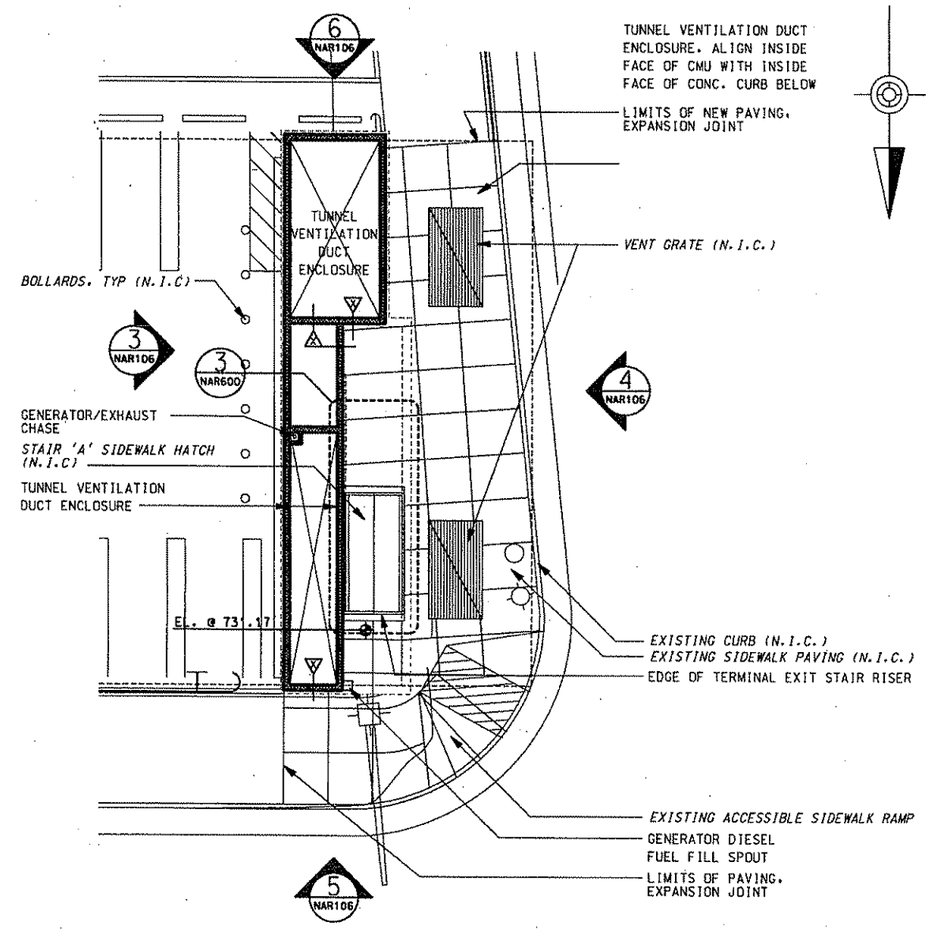

STREET LEVEL PLAN 1 NAR101

NOTE: FOR STAIR A INFO SEE DWG. NAR600

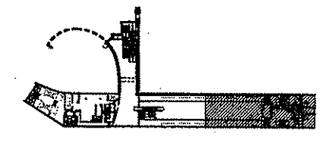

100% SUBMISSION

COOPER CARRY
50 WEST 17TH STREET
12TH FLOOR
NEW YORK, NY 10011
212-691-0371
WWW.COOPERCARRY.COM

NO.	DATE	DESCRIPTION

REVISIONS

THE PREPARATION OF THIS DOCUMENT HAS BEEN FINANCED IN PART THROUGH A GRANT FROM THE FEDERAL TRANSIT ADMINISTRATION, U.S. DEPARTMENT OF TRANSPORTATION, UNDER THE URBAN MASS TRANSPORTATION ACT OF 1964, AS AMENDED, FOR THE PORT AUTHORITY OF ALLEGHENY COUNTY, PENNSYLVANIA.

SIGNATURE

DMJM HARRIS | AECOM
FOUR GATEWAY CENTER
20TH FLOOR
PITTSBURGH, PA 15222

APPROVED DATE

DESIGNED	JBW
DRAWN	AW, BM, CF
CHECKED	LC
IN CHARGE	CR
DATE	APR. 03, 2008
SCALE	0 4' 8' 16'

PORT AUTHORITY OF ALLEGHENY COUNTY
PITTSBURGH PENNSYLVANIA

NORTH SHORE CONNECTOR
NORTH SIDE STATION FINISHES
PARTIAL STREET LEVEL PLAN C
VENTILATION BULKHEAD AT STAIR 'A'

Port Authority

CONTRACT NO. NSC-011
DWG. NO. NAR106 SHT. 77

$DATE$ $TIME$
\\192.168.25\JS\PROJECTS\206025\Drawings\NAR06.sht

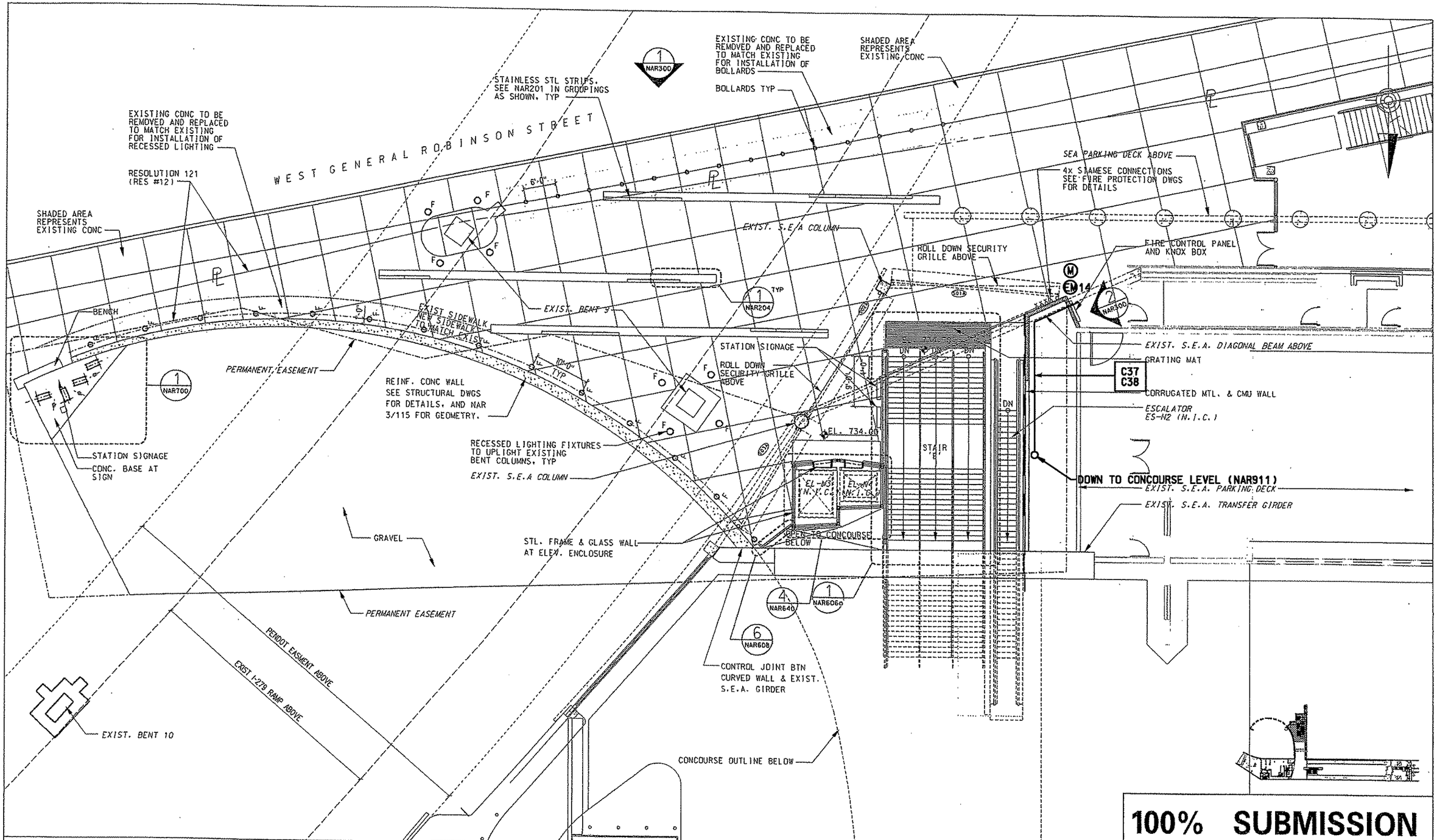

100% SUBMISSION

NO.	DATE	DESCRIPTION

REVISIONS

THE PREPARATION OF THIS DOCUMENT HAS BEEN FINANCED IN PART THROUGH A GRANT FROM THE FEDERAL TRANSIT ADMINISTRATION, U.S. DEPARTMENT OF TRANSPORTATION, UNDER THE URBAN MASS TRANSPORTATION ACT OF 1964, AS AMENDED, FOR THE PORT AUTHORITY OF ALLEGHENY COUNTY, PENNSYLVANIA.

SIGNATURE

DMJM HARRIS | AECOM
FOUR GATEWAY CENTER
20TH FLOOR
PITTSBURGH, PA 15222

APPROVED DATE

DESIGNED	JBW
DRAWN	AW, BM, CF
CHECKED	LC
IN CHARGE	CR
DATE	APR. 03, 2008
SCALE	0' 4' 8' 16'

PORT AUTHORITY OF ALLEGHENY COUNTY
PITTSBURGH PENNSYLVANIA

NORTH SHORE CONNECTOR
NORTH SIDE STATION FINISHES
PARTIAL STREET LEVEL
PLAN D - ALTERNATE

Port Authority

CONTRACT NO. NSC-011
DWG.NO. NAR107a
SHT. 77

$DATE$ $TIME$
$FILE$

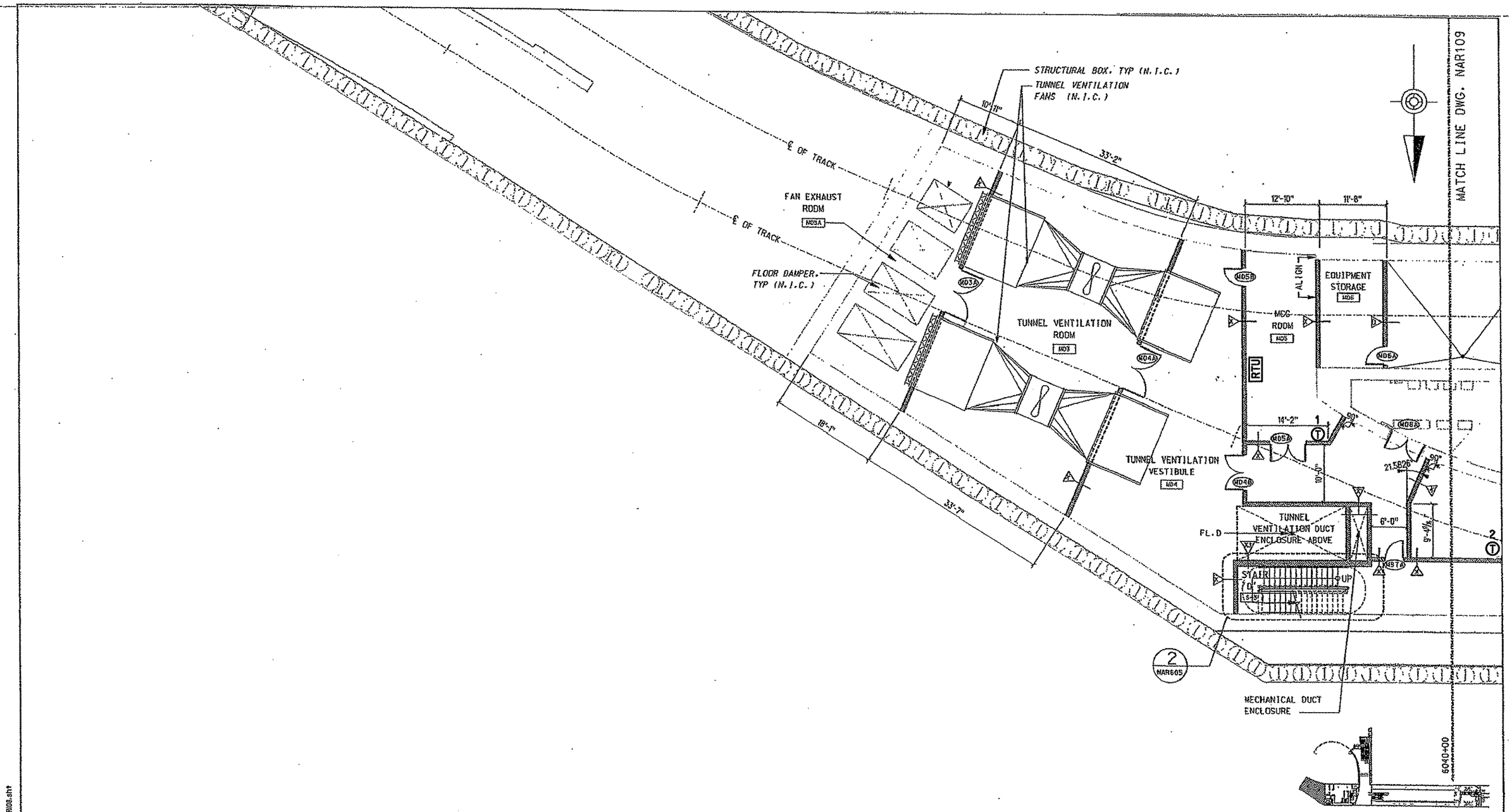

100% SUBMISSION

DESIGNED	JBW	
DRAWN	AW, BM, CF	
CHECKED	LC	
IN CHARGE	CR	
DATE	APR. 03. 2008	
SCALE	0' 4' 8' 16'	

DMJM HARRIS | AECOM
FOUR GATEWAY CENTER
20TH FLOOR
PITTSBURGH, PA 15222

APPROVED DATE

SIGNATURE

THE PREPARATION OF THIS DOCUMENT HAS BEEN FINANCED IN PART THROUGH A GRANT FROM THE FEDERAL TRANSIT ADMINISTRATION, U.S. DEPARTMENT OF TRANSPORTATION, UNDER THE URBAN MASS TRANSPORTATION ACT OF 1964, AS AMENDED, FOR THE PORT AUTHORITY OF ALLEGHENY COUNTY, PENNSYLVANIA.

NO.	DATE	DESCRIPTION

REVISIONS

PORT AUTHORITY OF ALLEGHENY COUNTY
PITTSBURGH PENNSYLVANIA

NORTH SHORE CONNECTOR
NORTH SIDE STATION FINISHES
PARTIAL CONCOURSE LEVEL
PLAN A

Port Authority

CONTRACT NO. NSC-011
DWG. NO. NAR108
SHT. 77

$DATE$ $TIME$
\\192.168.25.13\PROJECTS\206125\Drawings\NAR108.dwg

MATCH LINE DWG. NAR111

MATCH LINE DWG. NAR108

MATCH LINE DWG. NAR110

C1 C17 C42
C2 C18 C45
C3 C19 C48
C4 C20 C25
C5 C27
C6 C29
C7 C34
C8 C37
C9 C38
C10 C41

C36
C43
C44
C56

STRUCTURAL BOX (N.I.C.)

EXIST. STEP AT STA. 6040+40.91

6 NAR720

SLOPE TO DRAIN 1/8" PER FOOT

FUTURE FARE COLLECTION

#3 AM

CORRUGATED MTL. & CMU / STL. STUD WALL

ADVERTISING PANEL - B UNIT (NIC)

CONDUIT ROUTING CONTINUED ON NAR911

1 NAR210

SP SPKR

FL.D (NIC)

4 NAR515

C7 C41
C8 C42
C9 C29
C10 C27
C37
C38

C17
C18
C19
C20

51'-4"

18'-0"

MCC ROOM

CUSTODIAL / TRASH ROOM

FIRE ALARM PANEL

PAAC POLICE

#5

2 NAR210

CONDUIT ROUTING CONTINUES TO CCTV CAMERAS 9 & 10 ABOVE CEILING (NAR910)

℄ OF TRACK

DOWN TO ELEV. EQ. ROOM (NAR113)

PULL BOX

1 NAR604

STAIR 'C'

#8

#3

STA. 0+000 CONCOURSE BASELINE

RTU #1

M05

COMMUNICATIONS ROOM

MAINT. SUPPORT

10'-8"

5'-0"

#1

#13

C47

NAR320

CONCOURSE LEVEL @ EL.709.00 +/-

TEMPERED GLASS & ALUM WALL. TYP BOTH SIDES OF STAIR

ESCALATOR ES-N1 (N.I.C.)

10'-8 1/4"

5'-9"

1'-0"

14'-8 1/2"

1 NAR603

LINE OF SOFFIT ABOVE

#4

#5

SP SPKR

3 NAR210

PLATFORM BELOW

STAIR 'B'

MECHANICAL ROOM

WOMEN

MEN

VENDOR OPTIONS

#2

CORRIDOR

5 NAR325

#7

SLOPE TO DRAIN 1/8" PER FOOT

C1 C5
C2 C6
C3 C27
C4 C29

℄ OF TRACK

12'-0"

35'-0"

5'-0"

12'-2"

4 NAR515 STM

2 NAR520

IN SLAB LIGHT STRIP, TYP SEE NGN018 FOR LIGHT

CAST-IN PLACE CONCRETE WALL SEE STRUCTURAL DWGS FOR DETAILS

STAINLESS STEEL PARTIAL HEIGHT WALL

COLORED CONC TOPPING RE: NAR202

PLATFORM BELOW

STRUCTURAL BOX (N.I.C.)

SLOPING SS MTL. PANEL WALL WITH LIGHT STRIPS, TYP.

EXIST. STEP AT STA. 6040+43.40

C46 C11 C49 C53
C39 C12 C50 C54
C40 C13 C51 C32
C35 C14 C52 C26
C33 C15 C21 C28
C16 C22 C23
C24

STA. L6040+73.67 = STA. 0+00 CONCOURSE BASELINE
N 2° 11' 21" E

6040+00

6041+00

6042+00

100% SUBMISSION

NO.	DATE	DESCRIPTION

REVISIONS

THE PREPARATION OF THIS DOCUMENT HAS BEEN FINANCED IN PART THROUGH A GRANT FROM THE FEDERAL TRANSIT ADMINISTRATION, U.S. DEPARTMENT OF TRANSPORTATION, UNDER THE URBAN MASS TRANSPORTATION ACT OF 1964, AS AMENDED, FOR THE PORT AUTHORITY OF ALLEGHENY COUNTY, PENNSYLVANIA.

SIGNATURE

DMJM HARRIS | AECOM
FOUR GATEWAY CENTER
20TH FLOOR
PITTSBURGH, PA 15222

APPROVED DATE

DESIGNED	JBW
DRAWN	AW, BM, CF
CHECKED	LC
IN CHARGE	CR
DATE	APR. 03, 2008
SCALE	0' 4' 8' 16'

PORT AUTHORITY OF ALLEGHENY COUNTY
PITTSBURGH PENNSYLVANIA

NORTH SHORE CONNECTOR
NORTH SIDE STATION FINISHES
PARTIAL CONCOURSE LEVEL
PLAN B

Port Authority

CONTRACT NO. NSC-011

DWG.NO. NAR109 SHT. 27

DATE: \192.168.250.13\PROJECTS\206025\Drawings\NAR109.dwg

MATCH LINE DWG. NAR109

SLOPING MTL. PANEL WALL WITH LIGHT STRIPS SEE NAR515 FOR DETAILS

SMOKE EXHAUST DUCT TO RUN BEHIND SLOPING MTL. PANEL WALL REFER TO SECTIONS (N.I.C.)

℄ OF TRACK

PLATFORM BELOW

8'-5" X 8'-8" ACCESS PANEL

S.S. PERFORATED METAL PANEL WALL

DAMPER (N.I.C.) TYP OF 3

3 NAR525

TUNNEL VENTILATION ACCESS ROOM M16A

5'-0"

STRUCTURAL BOX (N.I.C.)

FLOOR DAMPER, TYP. (N.I.C.)

TUNNEL VENTILATION FAN. TYP (N.I.C.)

TUNNEL VENTILATION ROOM M16B

DOWN STAIRWELL TO PLATFORM LEVEL (NAR114)

STAIR S-1

T 12

M16B M16D

T 11

2 NAR600

12'-0"

ALIGN WALL W/ SLAB OPENING ABOVE

FL.D.

FL.D. (N.I.C.)

STRUCTURAL BOX (N.I.C.)

SLAB OPENING ABOVE (N.I.C.)

4" HIGH CURB @ DOOR

FL.D. (N.I.C.)

TRANSFORMER ROOM M17

FL.D.

FL.D. (N.I.C.)

GENERATOR EXHAUST CHASE

SLAB OPENING ABOVE (N.I.C.)

℄ OF TRACK

13'-2"

C53 C54

8'-3"

6'-4"

ALIGN FACE WALL W/ SLAB OPENING ABOVE

SMOKE EXHAUST DUCT (N.I.C.) BEHIND SLOPING MTL. PANEL WALL, TYP BOTH SIDES OF TUNNEL

STRUCTURAL BOX (N.I.C.)

SLOPING MTL. PANELWALL WITH LIGHT STRIPS SEE NAR515 FOR DETAILS. TYP BOTH SIDES OF TUNNEL

6042+00

6043+00

6044+00

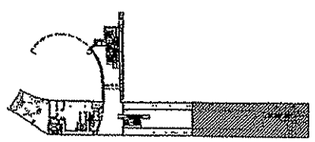

100% SUBMISSION

NO.	DATE	DESCRIPTION

REVISIONS

THE PREPARATION OF THIS DOCUMENT HAS BEEN FINANCED IN PART THROUGH A GRANT FROM THE FEDERAL TRANSIT ADMINISTRATION, U.S. DEPARTMENT OF TRANSPORTATION, UNDER THE URBAN MASS TRANSPORTATION ACT OF 1964, AS AMENDED, FOR THE PORT AUTHORITY OF ALLEGHENY COUNTY, PENNSYLVANIA.

SIGNATURE

APPROVED DATE

DMJM HARRIS | AECOM
FOUR GATEWAY CENTER
20TH FLOOR
PITTSBURGH, PA 15222

DESIGNED	JBW
DRAWN	AW, BM, CF
CHECKED	LC
IN CHARGE	CR
DATE	APR. 03, 2008
SCALE	0' 4' 8' 16'

PORT AUTHORITY OF ALLEGHENY COUNTY
PITTSBURGH PENNSYLVANIA

NORTH SHORE CONNECTOR
NORTH SIDE STATION FINISHES
PARTIAL CONCOURSE LEVEL
PLAN C

Port Authority

CONTRACT NO. NSC-011

DWG. NO. NAR110 SHT. 77

$DATE$ $TIME$
\\192.168.2.BLU3\PROJECTS\206125\Drawings\NAR110.dgn

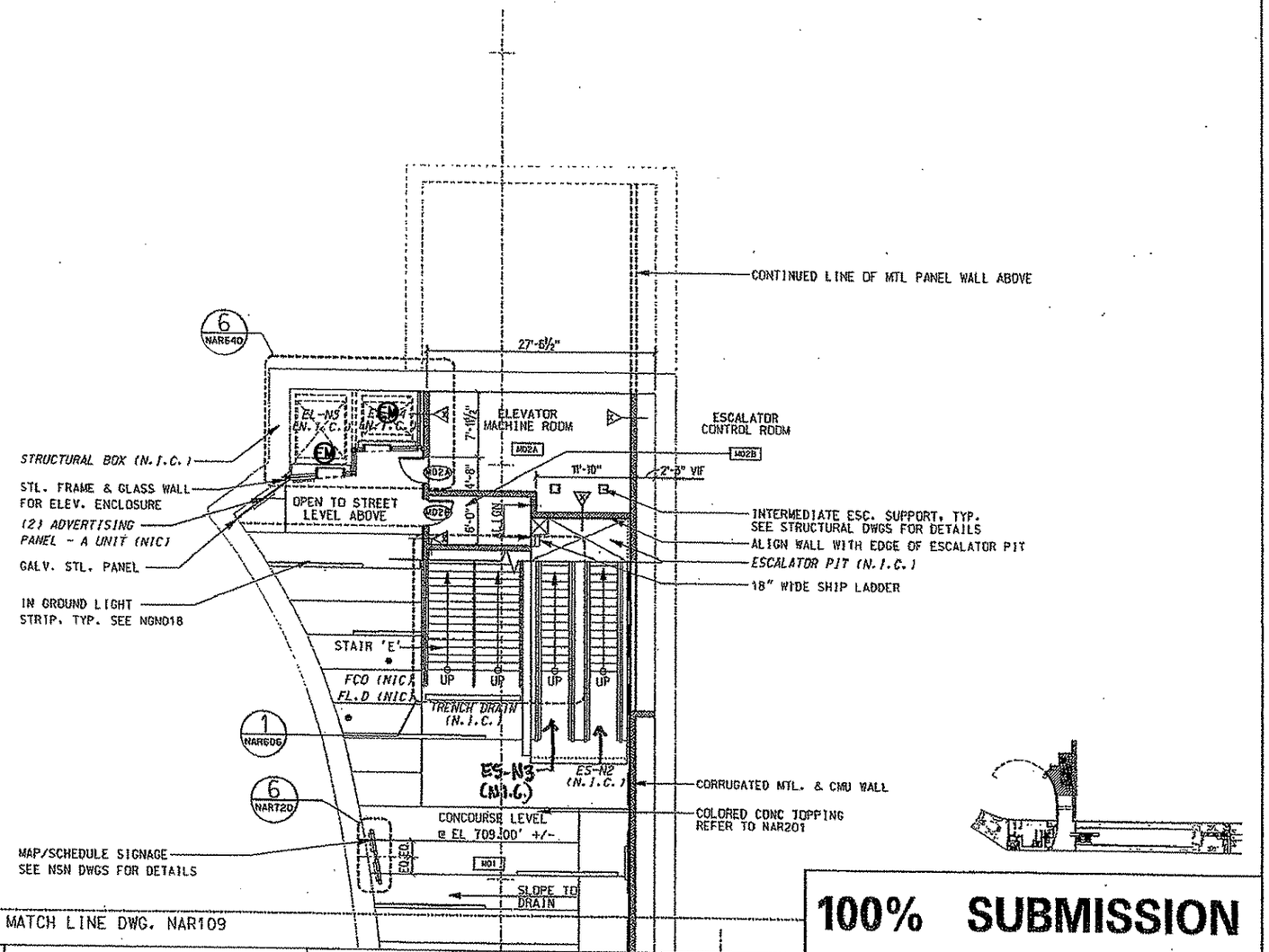

100% SUBMISSION

NO.	DATE	DESCRIPTION

REVISIONS

THE PREPARATION OF THIS DOCUMENT HAS BEEN FINANCED IN PART THROUGH A GRANT FROM THE FEDERAL TRANSIT ADMINISTRATION, U.S. DEPARTMENT OF TRANSPORTATION, UNDER THE URBAN MASS TRANSPORTATION ACT OF 1964, AS AMENDED, FOR THE PORT AUTHORITY OF ALLEGHENY COUNTY, PENNSYLVANIA.

SIGNATURE

DMJM HARRIS | AECOM
FOUR GATEWAY CENTER
20TH FLOOR
PITTSBURGH, PA 15222

APPROVED DATE

DESIGNED	JBW
DRAWN	AW, BM, CF
CHECKED	LC
IN CHARGE	CR
DATE	APR. 03, 2008
SCALE	0' 4' 8' 16'

PORT AUTHORITY OF ALLEGHENY COUNTY
PITTSBURGH PENNSYLVANIA

NORTH SHORE CONNECTOR
NORTH SIDE STATION FINISHES
PARTIAL CONCOURSE LEVEL
PLAN D

Port Authority

CONTRACT NO. NSC-011

DWG.NO. NAR111 SHT. 77

\\192.168.2.15\S\PROJECTS\208625\Drawings\NAR6.dwg

NOTE: COMMUNICATION DEVICES INCLUDING SP/AM/EM/VMS/T#/RTU/CCTV/TRAIN SIGNAL ARE N.I.C.

MATCH LINE DWG. NAR114

P.T. 6039+77.31

C46 C11
C39 C12
C40 C13
C35 C14
C33 C15
C16

STRUCTURAL BOX (N.I.C.)
WALKWAY (N.I.C.)
SIGNAL LOCATION AT 6040+32.42 (N.I.C.)

ESCALATOR PIT & SUMP PIT (N.I.C.)
18" WIDE SHIP LADDER
STAINLESS. STL. TUBE RAIL W/ MESH PANEL

RECESSED FLR LIGHTS SEE FINISH PLANS, TYP
24" x 48" PRECAST CONCRETE EDGE PAVER, TYP
4" COLORED CONCRETE TOPPING RE: NAR203

C49 C53
C50 C54
C51 C32
C52 C26
C21 C28
C22 C23
C24 C31

CABLES THRU OPENING AND IN-CABLE TRAY TO WEST END, AND UP TO COMM ROOM (NAR109).

℄ OF TRACK N87°48'39"W

EJECTOR PUMP ROOM P03
ELEVATOR EQUIPMENT ROOM P04
SIGNAL ROOM P02
ELEVATOR VESTIBULE P05
ESC CONTROL ROOM P06
STAIR 'B'
PLATFORM @ EL. +/- 694.00 P01
STAIR C S-2
SIGNAGE POLE TYPE A
ES-N1 (N.I.C.)
SEE SECTION 3/NAR520
1 1/2% SLOPE FROM ℄ PLATFORM

COMM. CABLES IN CABLE TRAY BENEATH PLATFORM (CABLE TRAY BY NSC 009)

6AR
C35 C13
C33 C14
C11 C15
C12 C16

P.C. 6040+34.45

28'-9" 17'-8" 5'-6" TO FACE OF CMU ℄ OF TRACK

CLEARANCE ENVELOPE

C49 C53
C50 C54
C51 C32
C52 C26
C21 C28
C22 C30
C23 C31
C24

CLEARANCE ENVELOPE
LINE OF CONCOURSE LEVEL ABOVE
SLOPING MTL. PANEL WALL WITH LIGHT STRIPS SEE NAR515 FOR DETAILS. TYP BOTH SIDES OF TUNNEL
STRUCTURAL BOX (N.I.C.)

C49 C53
C50 C54
C51 C32
C52 C26
C21 C28
C22 C30
C23 C31
C24

PENDENT MOUNTED EXIT & DIRECTIONAL SIGNAGE

COMM. CABLES IN CABLE TRAY BENEATH PLATFORM (CABLE TRAY BY NSC 009)

L6040+00 6041+00 6042+00

6040+53.23 EX'G STEP @ FINISH WALL STA. 6040+53.42

EQN. AHD. 6040+36.80
EQN. BK. 6040+77.18
P.I. 6040+77.18

LT TRACK PT6039+77.31
N 414093.8838
E 1339909.7268

RT TRACK PC6040+31.45
N 414127.4351
E 1339896.0461

RT TRACK PT6040+77.18
N 414138.1020
E 1339851.8888

CURVE # 6AR
P.I. STA. = 6040+54.62
R = 115.00'
Lo = 45.73'
Ls1 = -
Ls2 = -
I = 22°46'58"
Eo = 0.00"
V = 10 MPH
Eu = 3.83"

100% SUBMISSION

NO.	DATE	DESCRIPTION

REVISIONS

THE PREPARATION OF THIS DOCUMENT HAS BEEN FINANCED IN PART THROUGH A GRANT FROM THE FEDERAL TRANSIT ADMINISTRATION, U.S. DEPARTMENT OF TRANSPORTATION, UNDER THE URBAN MASS TRANSPORTATION ACT OF 1964, AS AMENDED, FOR THE PORT AUTHORITY OF ALLEGHENY COUNTY, PENNSYLVANIA.

SIGNATURE

DMJM HARRIS | AECOM
FOUR GATEWAY CENTER
20TH FLOOR
PITTSBURGH, PA 15222

APPROVED DATE

DESIGNED	JBW
DRAWN	AW, BM, CF
CHECKED	LC
IN CHARGE	CR
DATE	APR. 03, 2008
SCALE	0' 4' 8' 16'

PORT AUTHORITY OF ALLEGHENY COUNTY
PITTSBURGH PENNSYLVANIA

NORTH SHORE CONNECTOR
NORTH SIDE STATION FINISHES
PARTIAL PLATFORM LEVEL
PLAN B

Port Authority

CONTRACT NO. NSC-011
DWG. NO. NAR113
SHT. 77

$DATE$ $TIME$
\\192.168.25.103\PROJECTS\206025\Drawings\NAR113.sht

MATCH LINE DWG. NAR113

NOTES:

1. COMM CABLES TO OPENING VIA CABLE TRAY (BY NSC-009) UNDER PLATFORM
2. ACESS TO OPENING BY NSC-011.

NOTE: COMMUNICATION DEVICES INCLUDING SP/AM/EM/VMS/T#/RTU/CCTV/TRAIN SIGNAL ARE NIC

SLOPING MTL. PANEL WALL WITH LIGHT STRIPS SEE NAR515 FOR DETAILS. TYP BOTH SIDES OF TUNNEL

CLEARANCE ENVELOPE

STRUCTURAL BOX (N.I.C.)

S.S. PERFORATED PANEL ABOVE

24" x 48" PRECAST CONCRETE EDGE STRIPS. TYP

SLAB OPENING ABOVE (N.I.C.)

SIGNAL LOCATION AT 6043+36 (N.I.C.)

EMBEDDED CONDUIT (NIC)

METAL STAIR (NIC)

6'-9"

1 NAR315

℄ OF TRACK N87°48'39"W

CABLE UP STAIRWELL TO CONCOURSE LEVEL (NAR-110)

NOTE 1

1 NAR600

5'-1" 1'-0" 4x4 OPENING BY NSC-006

1 1/4% SLOPE FROM ℄ OF PLATFORM

SIGNAGE POLE TYPE A

6 NAR710

PLATFORM @ EL. +/- 694.00'

P01

SIGNAGE POLE TYPE B

5 NAR710

SIGNAGE POLE TYPE B

6 NAR710

STAIR 'A'

S-1

UP

P09A

FL.D. (NIC)

AREA OF REFUGE

#3

ELECTRICAL ROOM

P07

P07A

T 7

MCC ROOM

P08

P08A

T 9

EMERGENCY GENERATOR

P11

P11A

P11B

T 10

ELECTRICAL ROOM

P09

P09A

P09B

T 8

C49 C53
C50 C54
C51 C32
C52

STORAGE ROOM

P10

P10A

EQ

℄ OF TRACK

RECESSED FLR LIGHTS SEE FINISH PLANS. TYP

4" COLORED CONCRETE TOPPING MIN. REFER TO NAR203

PLATFORM EDGE

C49 C53
C50 C54
C51 C32
C52 C26
C28 C31

COMM. CABLES IN CABLE TRAY BENEATH PLATFORM (CABLE TRAY BY NSC 009)

C49 C53
C50 C54
C51 C32
C52 C26
C28 C31

C49 C53
C50 C54
C51 C32
C52

SLAB OPENING ABOVE (N.I.C.)

CONCRETE WALKWAY (N.I.C.)

STRUCTURAL BOX (N.I.C.)

STAIR "A" ABOVE

WALL AT EDGE OF SLAB BELOW

6042+00

6043+00

6043+17.37 FINISH WALL

6044+00

T.S. 6044+03.43

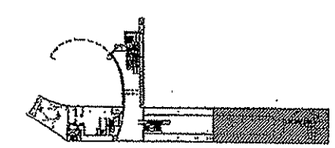

100% SUBMISSION

NO.	DATE	DESCRIPTION

REVISIONS

THE PREPARATION OF THIS DOCUMENT HAS BEEN FINANCED IN PART THROUGH A GRANT FROM THE FEDERAL TRANSIT ADMINISTRATION, U.S. DEPARTMENT OF TRANSPORTATION, UNDER THE URBAN MASS TRANSPORTATION ACT OF 1964, AS AMENDED. FOR THE PORT AUTHORITY OF ALLEGHENY COUNTY, PENNSYLVANIA.

SIGNATURE

DMJM HARRIS | AECOM

FOUR GATEWAY CENTER
20TH FLOOR
PITTSBURGH, PA 15222

APPROVED DATE

DESIGNED JBW
DRAWN AW, BM, CF
CHECKED LC
IN CHARGE CR
DATE APR. 03, 2008
SCALE 0' 4' 8' 16'

PORT AUTHORITY OF ALLEGHENY COUNTY
PITTSBURGH PENNSYLVANIA

NORTH SHORE CONNECTOR
NORTH SIDE STATION FINISHES
PARTIAL PLATFORM LEVEL
PLAN C

Port Authority

CONTRACT NO. NSC-011
DWG.NO. NAR114
SHT. 77

DATE& TIME& \\192.168.28.13\PROJECTS\20828\Drawings\NAR114.sht

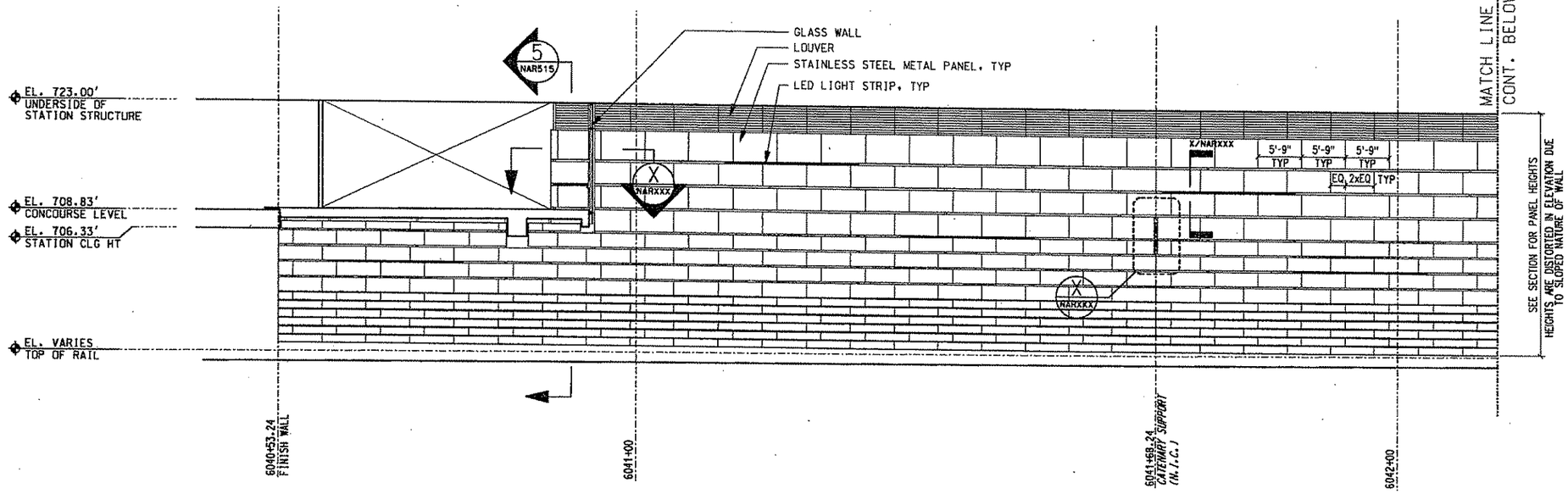

PARTIAL PLATFORM ELEVATION 1 NAR113 NAR114

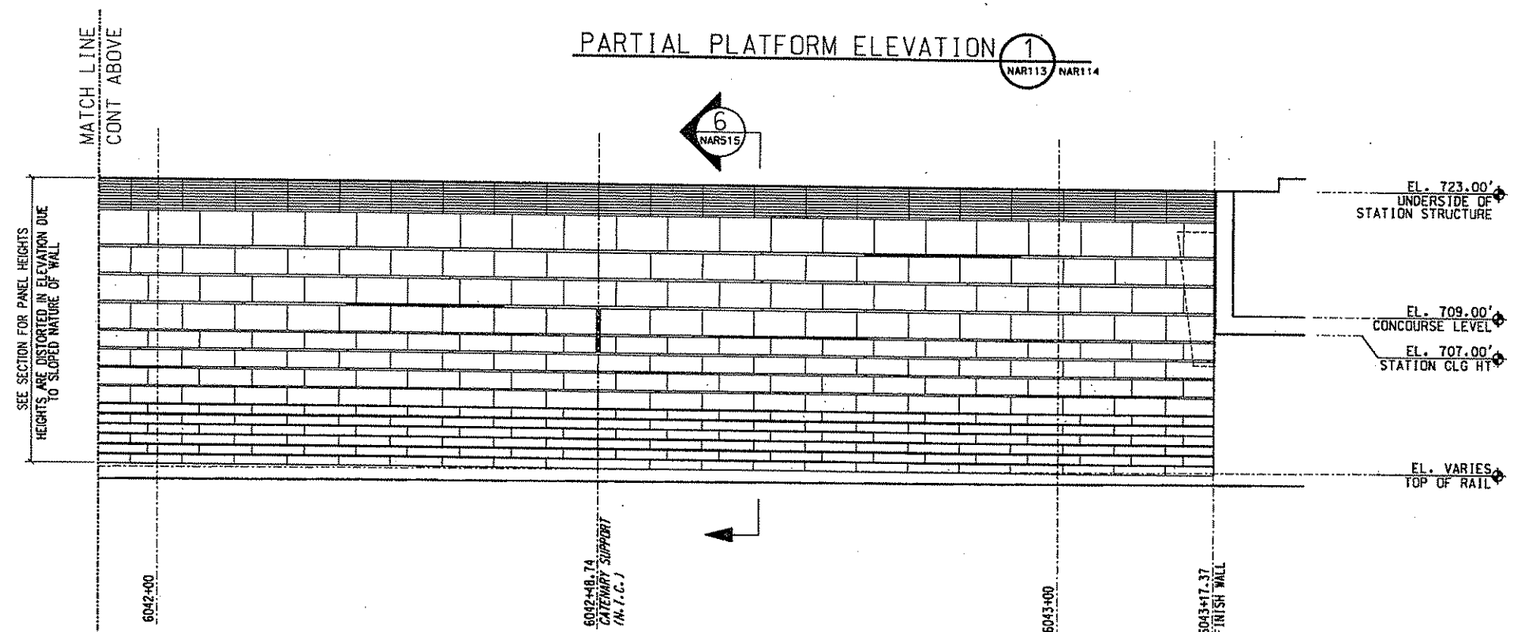

PARTIAL PLATFORM ELEVATION 1 NAR113 NAR114

100% SUBMISSION

PORT AUTHORITY OF ALLEGHENY COUNTY
PITTSBURGH PENNSYLVANIA

NORTH SHORE CONNECTOR
NORTH SIDE STATION FINISHES
PARTIAL ELEVATION
SLOPED METAL PANEL WALL

Port Authority

CONTRACT NO. NSC-011
DWG. NO. NAR315
SHT. 77

DMJM HARRIS | AECOM
FOUR GATEWAY CENTER
20TH FLOOR
PITTSBURGH, PA 15222

DESIGNED	JBW
DRAWN	AW, BM, CF
CHECKED	LC
IN CHARGE	CR
DATE	APR. 03, 2008
SCALE	0' 4' 8' 16'

SIGNATURE
APPROVED DATE

THE PREPARATION OF THIS DOCUMENT HAS BEEN FINANCED IN PART THROUGH A GRANT FROM THE FEDERAL TRANSIT ADMINISTRATION, U.S. DEPARTMENT OF TRANSPORTATION, UNDER THE URBAN MASS TRANSPORTATION ACT OF 1964, AS AMENDED, FOR THE PORT AUTHORITY OF ALLEGHENY COUNTY, PENNSYLVANIA.

NO.	DATE	DESCRIPTION

REVISIONS

COOPER CARRY
60 WEST 17TH STREET
12TH FLOOR
NEW YORK, NY 10011
212-481-0271
WWW.COOPERCARRY.COM

\\192.168.251.13\PROJECTS\206125\Drawings\NAR315.sht
@DATE& @TIME&

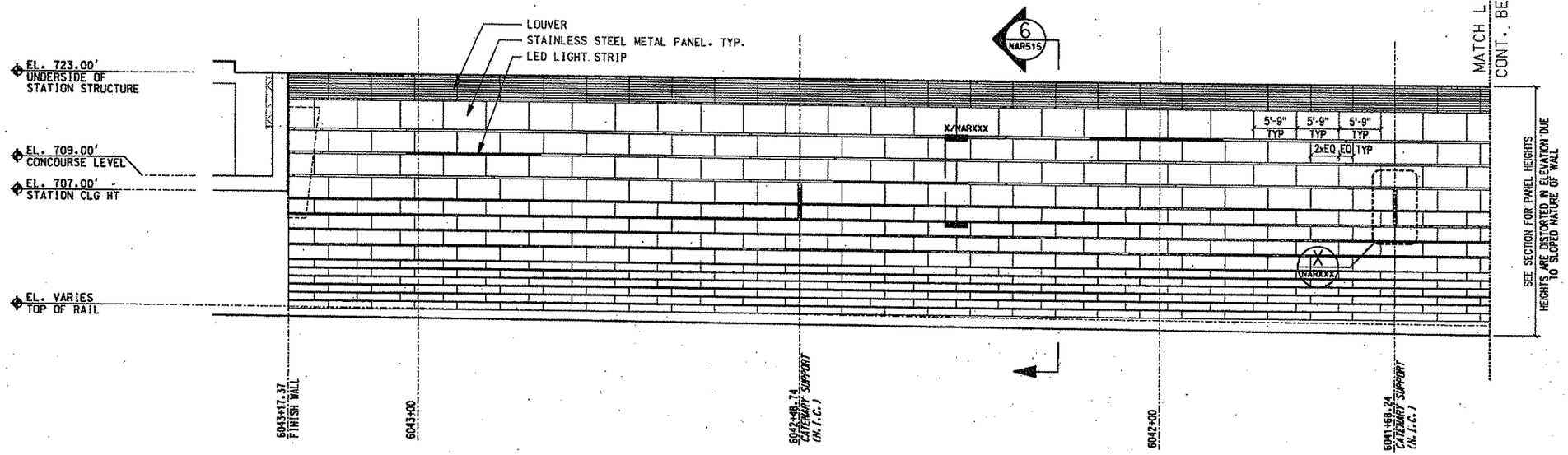

PARTIAL PLATFORM ELEVATION 1 NAR113 NAR114

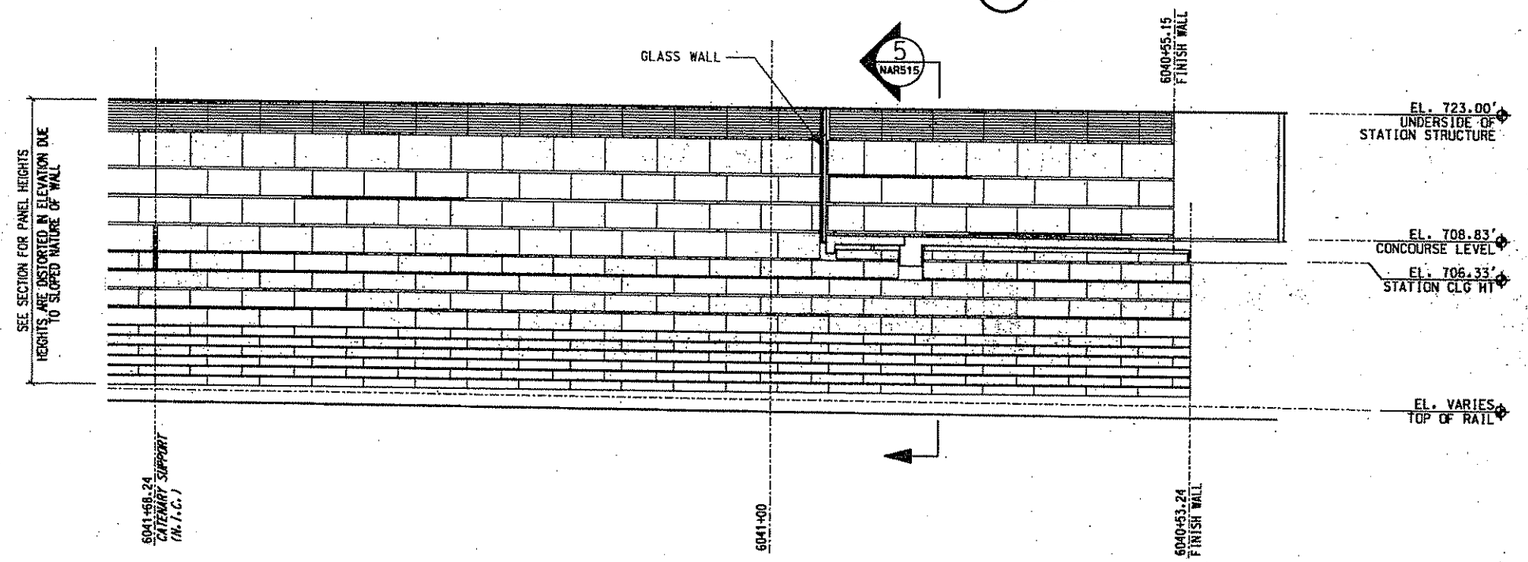

PARTIAL PLATFORM ELEVATION 1 NAR113 NAR114

100% SUBMISSION

COOPER CARRY
80 WEST 17TH STREET
12TH FLOOR
NEW YORK, NY 10011
212-691-0271
WWW.COOPERCARRY.COM

NO.	DATE	DESCRIPTION

REVISIONS

THE PREPARATION OF THIS DOCUMENT HAS BEEN FINANCED IN PART THROUGH A GRANT FROM THE FEDERAL TRANSIT ADMINISTRATION, U.S. DEPARTMENT OF TRANSPORTATION, UNDER THE URBAN MASS TRANSPORTATION ACT OF 1964, AS AMENDED, FOR THE PORT AUTHORITY OF ALLEGHENY COUNTY, PENNSYLVANIA.

SIGNATURE

DMJM HARRIS | AECOM
FOUR GATEWAY CENTER
20TH FLOOR
PITTSBURGH, PA 15222

APPROVED DATE

DESIGNED	JBW
DRAWN	AW, BM, CF
CHECKED	LC
IN CHARGE	CR
DATE	APR. 03, 2008
SCALE	0 4' 8' 16'

PORT AUTHORITY OF ALLEGHENY COUNTY
PITTSBURGH PENNSYLVANIA

NORTH SHORE CONNECTOR
NORTH SIDE STATION FINISHES
PARTIAL ELEVATION
SLOPED METAL PANEL WALL

Port Authority

CONTRACT NO. NSC-011
DWG. NO. NAR316
SHT. 77

\\192.168.25.13\PROJECTS\206825\Drawings\NAR316.sht

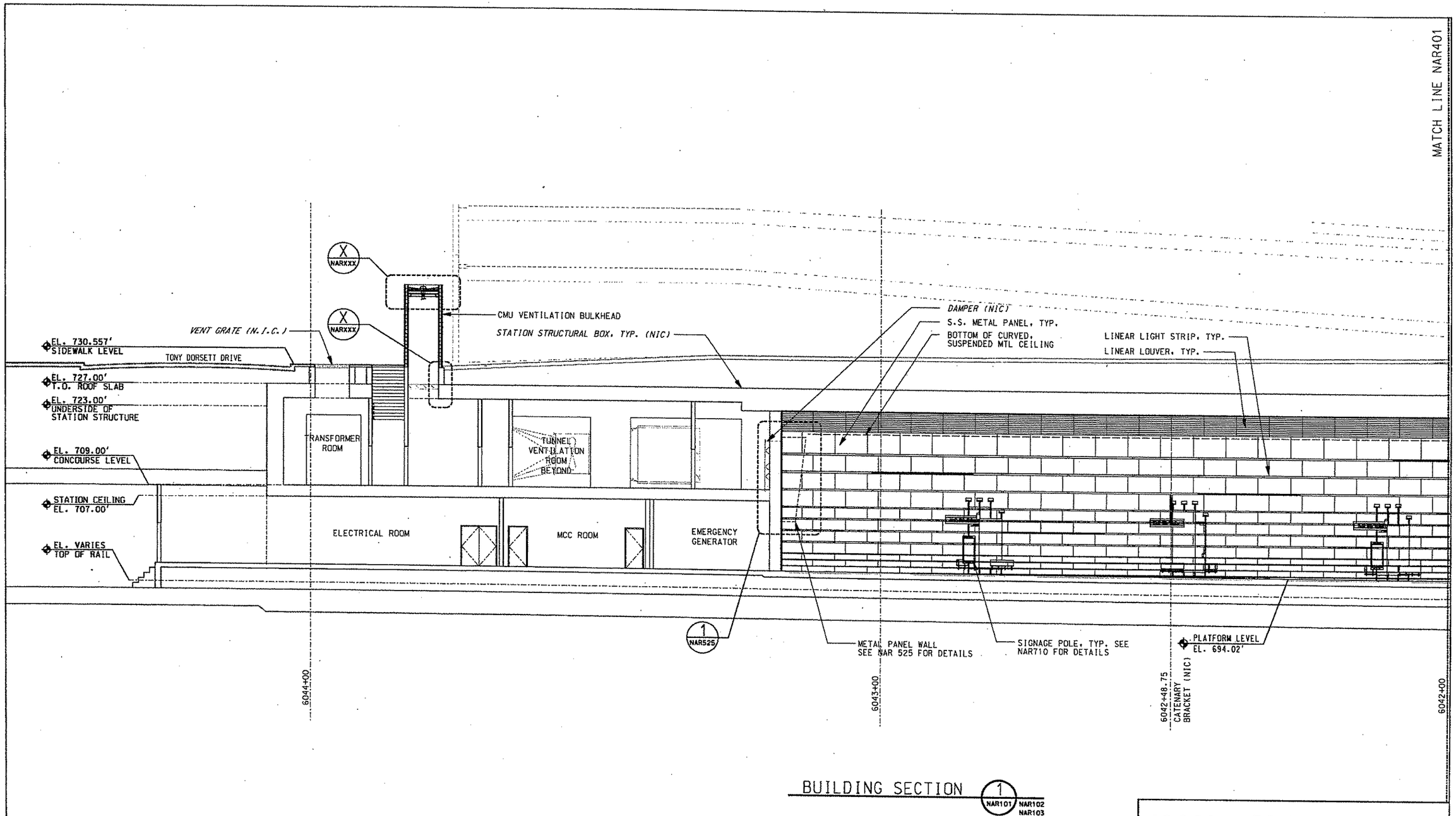

BUILDING SECTION 1 NAR101 NAR102 NAR103

100% SUBMISSION

COOPER CARRY
80 WEST 17TH STREET
13TH FLOOR
NEW YORK, NY 10011
212-691-0371
WWW.COOPERCARRY.COM

NO.	DATE	DESCRIPTION

REVISIONS

THE PREPARATION OF THIS DOCUMENT HAS BEEN FINANCED IN PART THROUGH A GRANT FROM THE FEDERAL TRANSIT ADMINISTRATION, U.S. DEPARTMENT OF TRANSPORTATION, UNDER THE URBAN MASS TRANSPORTATION ACT OF 1964, AS AMENDED. FOR THE PORT AUTHORITY OF ALLEGHENY COUNTY, PENNSYLVANIA.

SIGNATURE

DMJM HARRIS | AECOM
FOUR GATEWAY CENTER
20TH FLOOR
PITTSBURGH, PA 15222

APPROVED DATE

DESIGNED	JBW
DRAWN	AW, BM, CF
CHECKED	LC
IN CHARGE	CR
DATE	APR. 03, 2008
SCALE	0' 4' 8' 16'

PORT AUTHORITY OF ALLEGHENY COUNTY
PITTSBURGH PENNSYLVANIA

NORTH SHORE CONNECTOR
NORTH SIDE STATION FINISHES
BUILDING SECTION
CENTER OF PLATFORM - C

Port Authority

CONTRACT NO. NSC-011
DWG. NO. NAR400 SHT. 77

#DATE# #TIME# \\192.168.25\JYPROJECTS\206125\Drawings\NAR400.dwg

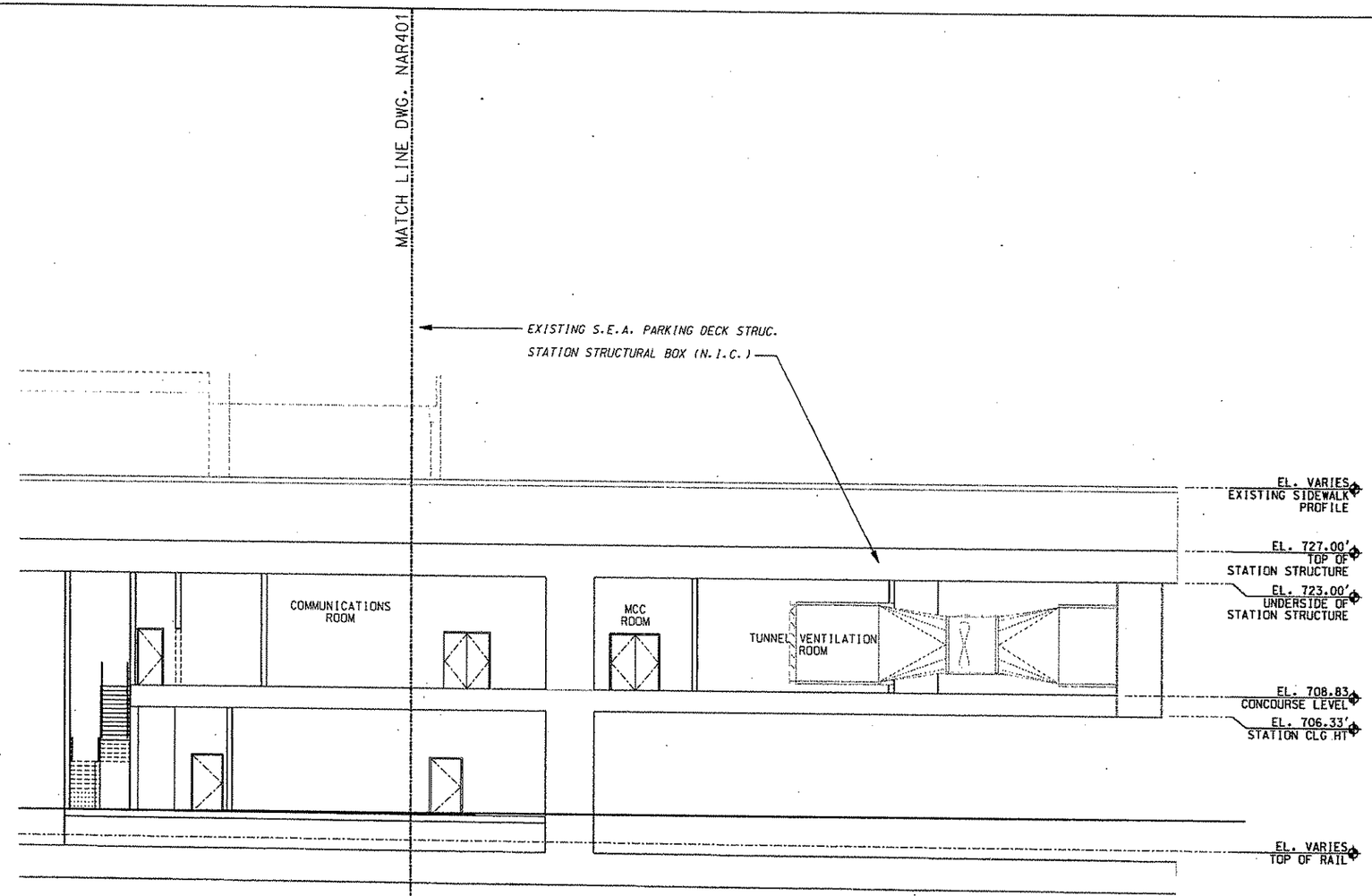

BUILDING SECTION 1 NAR101 NAR102 NAR103

100% SUBMISSION

COOPER CARRY
60 WEST 17TH STREET
12TH FLOOR
NEW YORK, NY 10011
212-691-0371
WWW.COOPERCARRY.COM

NO.	DATE	DESCRIPTION

REVISIONS

THE PREPARATION OF THIS DOCUMENT HAS BEEN FINANCED IN PART THROUGH A GRANT FROM THE FEDERAL TRANSIT ADMINISTRATION, U.S. DEPARTMENT OF TRANSPORTATION, UNDER THE URBAN MASS TRANSPORTATION ACT OF 1964, AS AMENDED, FOR THE PORT AUTHORITY OF ALLEGHENY COUNTY, PENNSYLVANIA.

SIGNATURE

DMJM HARRIS | AECOM
FOUR GATEWAY CENTER
20TH FLOOR
PITTSBURGH, PA 15222

APPROVED DATE

DESIGNED	JBW
DRAWN	AW, BM, CF
CHECKED	LC
IN CHARGE	CR
DATE	APR. 03, 2008
SCALE	0 4' 8' 16'

PORT AUTHORITY OF ALLEGHENY COUNTY
PITTSBURGH PENNSYLVANIA

NORTH SHORE CONNECTOR
NORTH SIDE STATION FINISHES
BUILDING SECTION
CENTER OF PLATFORM - A

Port Authority

CONTRACT NO. NSC-011
DWG. NO. NAR402 SHT. 40

\\192.168.25\JV\PROJECTS\206025\Drawings\NAR402.sht
#DATE# #TIME#

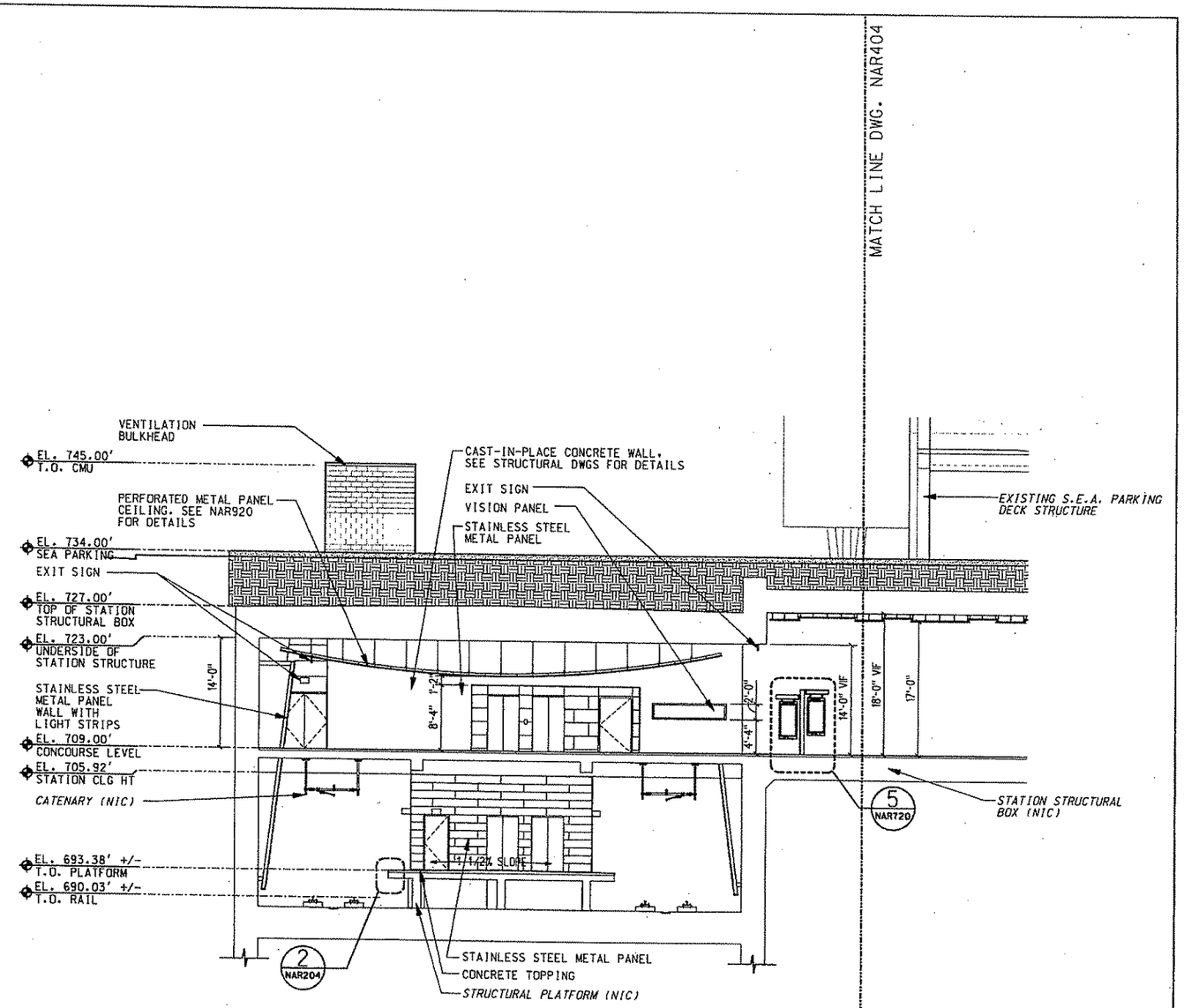

BUILDING SECTION @ STATION CUT 6040+70 (1 NAR101 NAR102 NAR103)

100% SUBMISSION

COOPER CARRY
80 WEST 17TH STREET
12TH FLOOR
NEW YORK, NY 10011
212-691-0271
WWW.COOPERCARRY.COM

NO.	DATE	DESCRIPTION

REVISIONS

THE PREPARATION OF THIS DOCUMENT HAS BEEN FINANCED IN PART THROUGH A GRANT FROM THE FEDERAL TRANSIT ADMINISTRATION, U.S. DEPARTMENT OF TRANSPORTATION, UNDER THE URBAN MASS TRANSPORTATION ACT OF 1964, AS AMENDED, FOR THE PORT AUTHORITY OF ALLEGHENY COUNTY, PENNSYLVANIA.

SIGNATURE

DMJM HARRIS | AECOM
FOUR GATEWAY CENTER
20TH FLOOR
PITTSBURGH, PA 15222

APPROVED DATE

DESIGNED	JBW
DRAWN	AW, BM, CF
CHECKED	LC
IN CHARGE	CR
DATE	APR. 03, 2008
SCALE	0' 4' 8' 16'

PORT AUTHORITY OF ALLEGHENY COUNTY
PITTSBURGH PENNSYLVANIA

NORTH SHORE CONNECTOR
NORTH SIDE STATION FINISHES
BUILDING SECTION
EAST STA 6040+70.00

Port Authority

CONTRACT NO. NSC-011
DWG. NO. NAR403
SHT. 77

\\192.168.25.13\PROJECTS\206125\Drawings\NAR403.sht
$DATE$ $TIME$

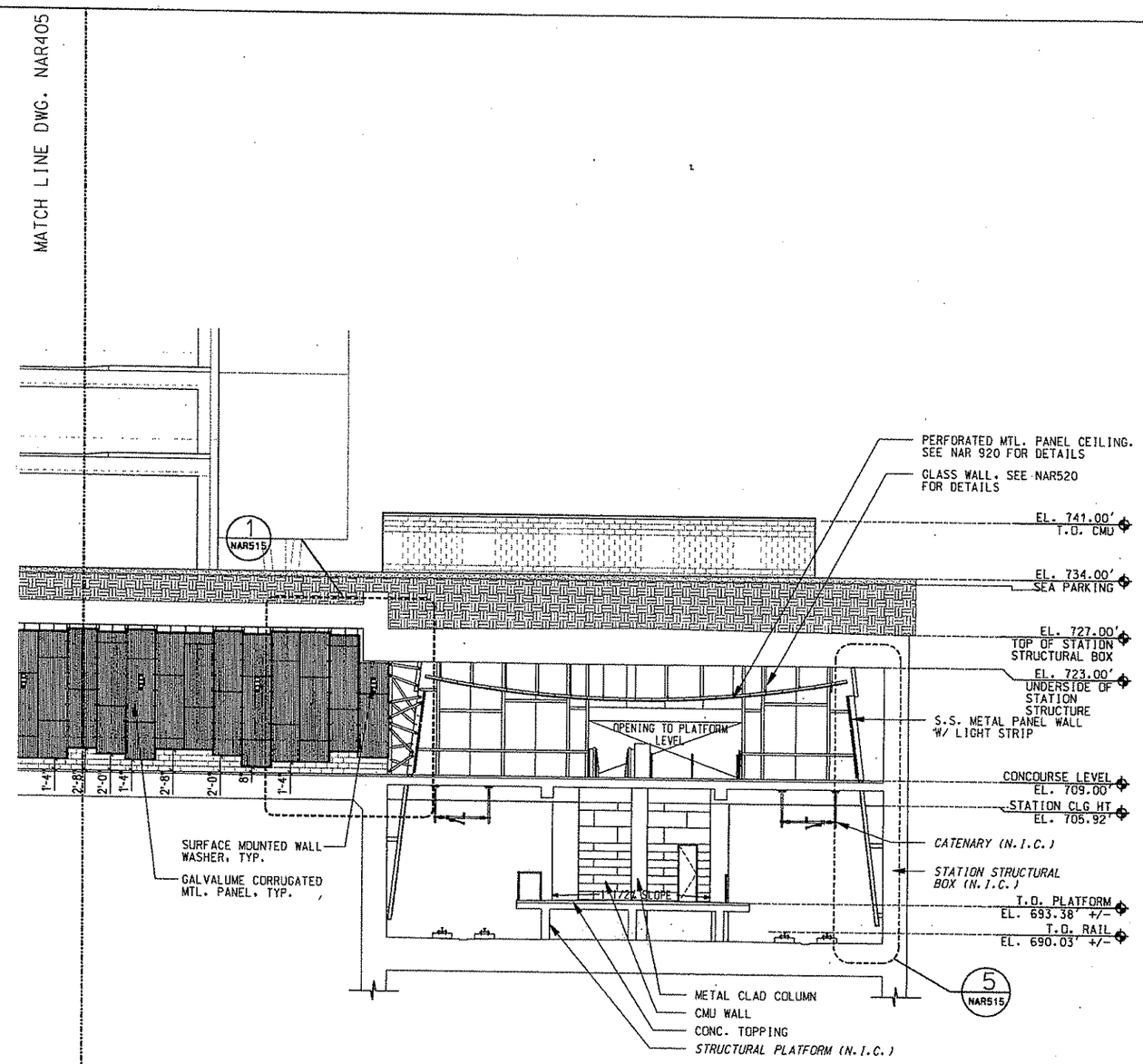

BUILDING SECTION @
SECTION CUT 6040+85 (1 NAR101) NAR102 NAR103

100% SUBMISSION

COOPER CARRY
80 WEST 17TH STREET
12TH FLOOR
NEW YORK, NY 10011
212-691-0271
WWW.COOPERCARRY.COM

NO.	DATE	DESCRIPTION

REVISIONS

THE PREPARATION OF THIS DOCUMENT HAS BEEN FINANCED IN PART THROUGH A GRANT FROM THE FEDERAL TRANSIT ADMINISTRATION, U.S. DEPARTMENT OF TRANSPORTATION, UNDER THE URBAN MASS TRANSPORTATION ACT OF 1964, AS AMENDED. FOR THE PORT AUTHORITY OF ALLEGHENY COUNTY, PENNSYLVANIA.

SIGNATURE

DMJM HARRIS | AECOM
FOUR GATEWAY CENTER
20TH FLOOR
PITTSBURGH, PA 15222

APPROVED DATE

DESIGNED	JBW
DRAWN	AW. BM. CF
CHECKED	LC
IN CHARGE	CR
DATE	APR. 03. 2008
SCALE	0 4' 8' 16'

PORT AUTHORITY OF ALLEGHENY COUNTY
PITTSBURGH PENNSYLVANIA

NORTH SHORE CONNECTOR
NORTH SIDE STATION FINISHES
BUILDING SECTION
WEST STA 6040+85.00

Port Authority

CONTRACT NO. NSC-011
DWG. NO. NAR406 SHT. 77

\\192.168.25\J1\PROJECTS\206125\Drawings\NAR406.sht
$DATE$ $TIME$

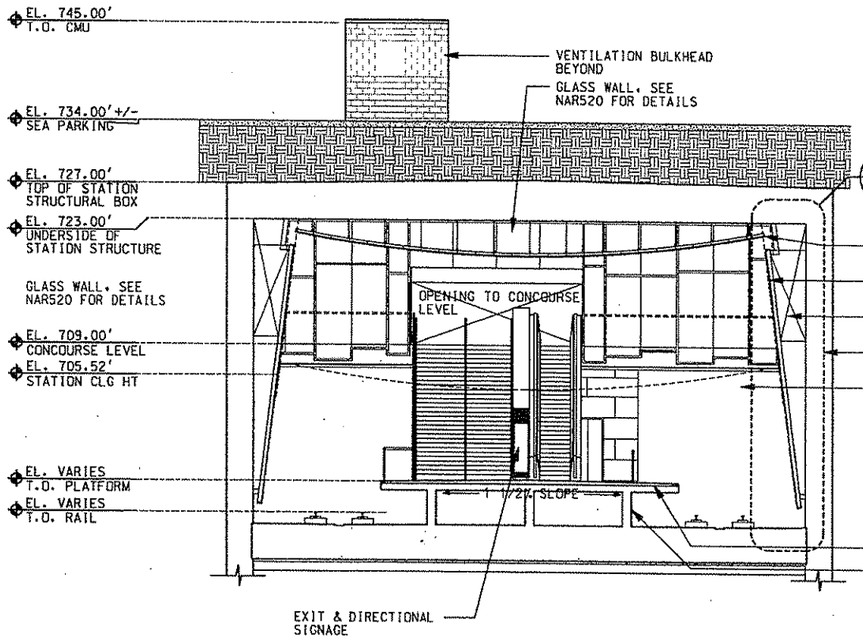

BUILDING SECTION @
TUNNEL STA. 6042+00 (2 / NAR101 / NAR102 NAR103)

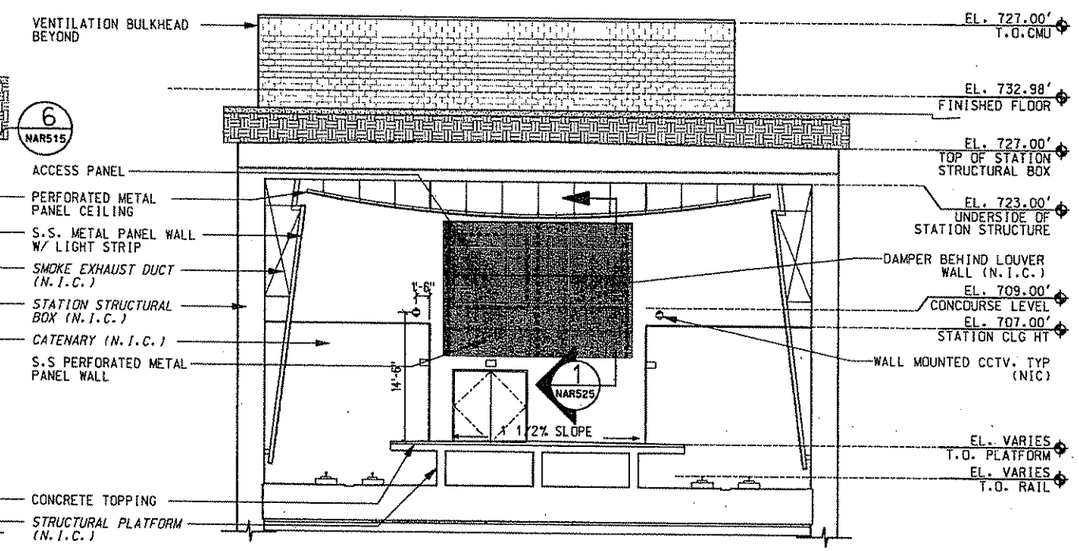

BUILDING SECTION @
TUNNEL STA. 6043+00 (1 / NAR101 / NAR102 NAR103)

100% SUBMISSION

COOPER CARRY
80 WEST 17th STREET
15TH FLOOR
NEW YORK, NY 10011
212-691-0271
WWW.COOPERCARRY.COM

NO.	DATE	DESCRIPTION

REVISIONS

THE PREPARATION OF THIS DOCUMENT HAS BEEN FINANCED IN PART THROUGH A GRANT FROM THE FEDERAL TRANSIT ADMINISTRATION, U.S. DEPARTMENT OF TRANSPORTATION, UNDER THE URBAN MASS TRANSPORTATION ACT OF 1964, AS AMENDED, FOR THE PORT AUTHORITY OF ALLEGHENY COUNTY, PENNSYLVANIA.

SIGNATURE

DMJM HARRIS | AECOM
FOUR GATEWAY CENTER
20TH FLOOR
PITTSBURGH, PA 15222

APPROVED DATE

DESIGNED	JBW
DRAWN	AW, BM, CF
CHECKED	LC
IN CHARGE	CR
DATE	APR. 03, 2008
SCALE	0 4' 8' 16'

PORT AUTHORITY OF ALLEGHENY COUNTY
PITTSBURGH PENNSYLVANIA

NORTH SHORE CONNECTOR
NORTH SIDE STATION FINISHES
BUILDING SECTIONS
TUNNEL STA 6042+00 & 6043+00

Port Authority

CONTRACT NO. NSC-011
DWG. NO. NAR407 SHT. 77

\\192.168.25.13\PROJECTS\20625\Drawings\NAR407.sht
#DATE# #TIME#

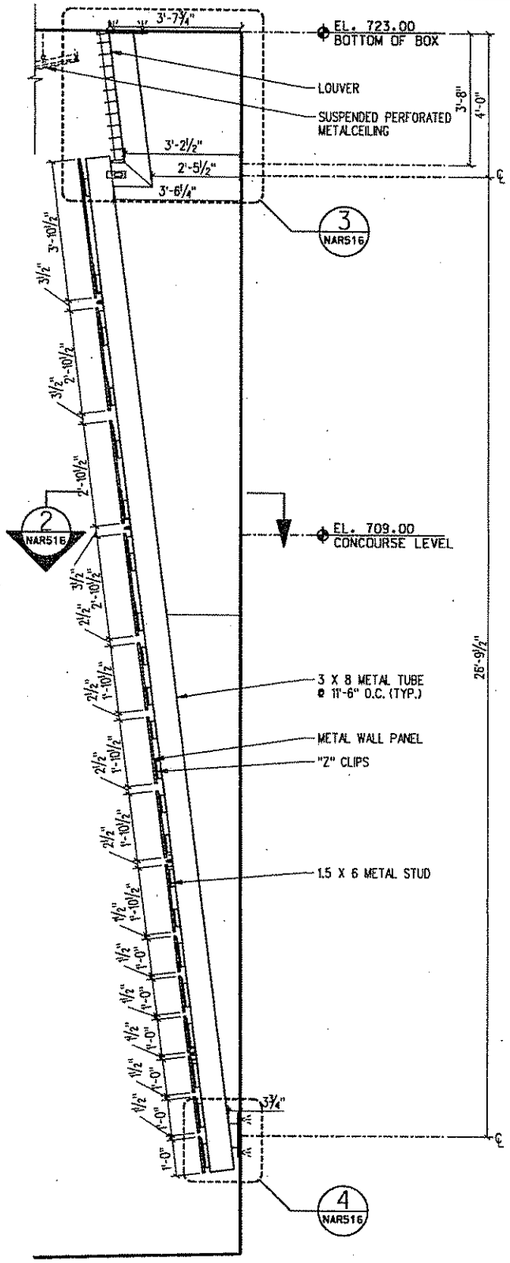

SECTION DETAIL 6 NAR315

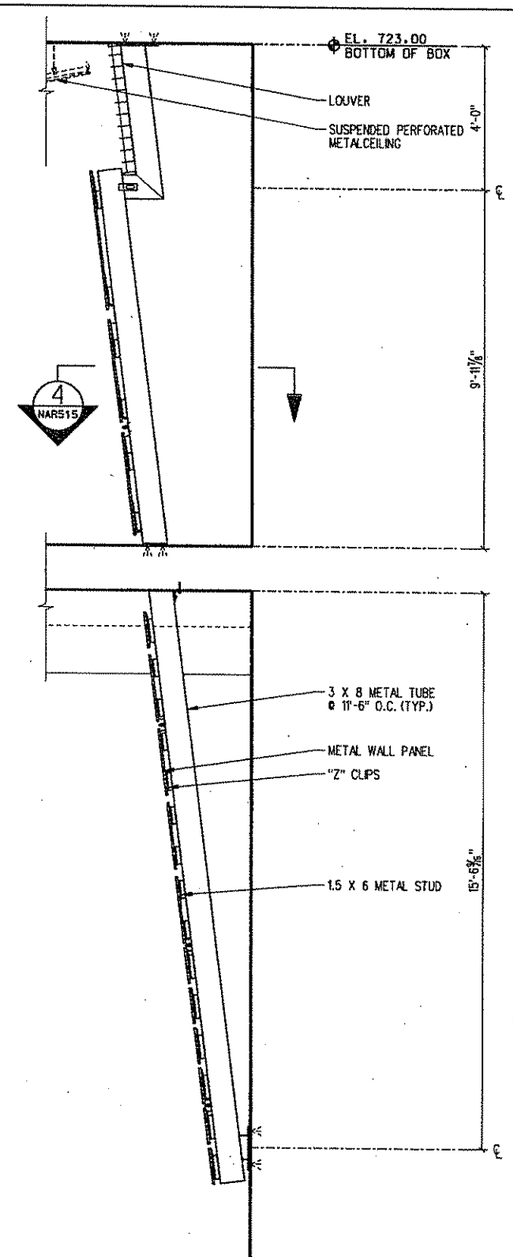

SECTION DETAIL 5 NAR406

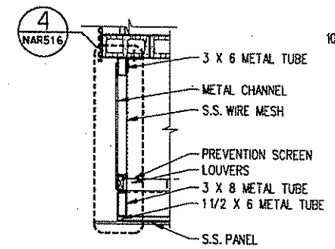

PLAN DETAIL 3 NAR515

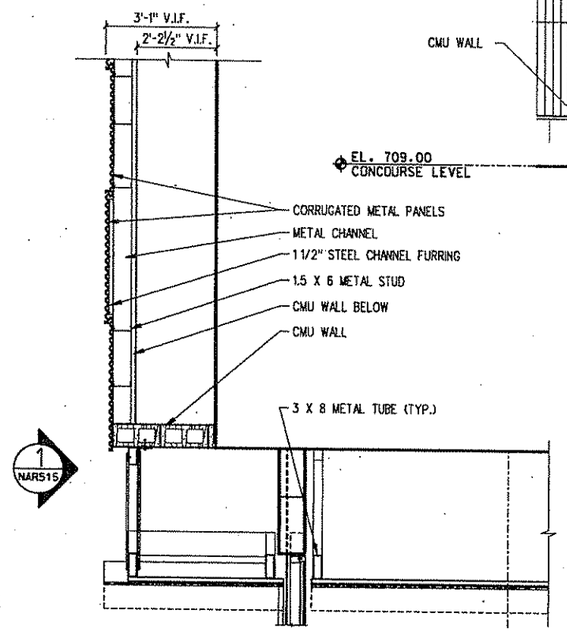

PLAN DETAIL 4 NAR515

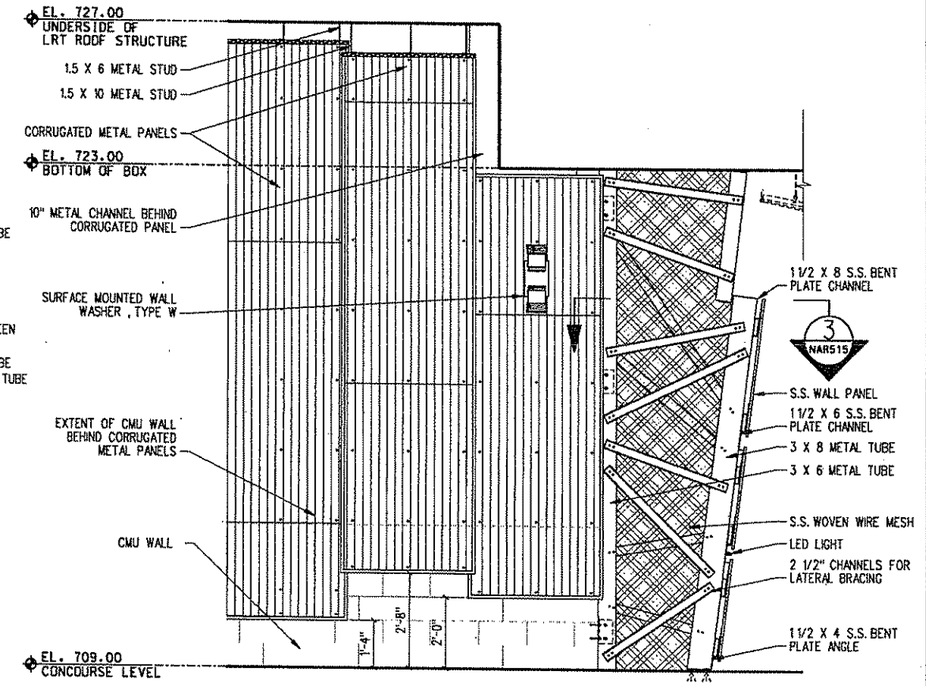

ELEVATION DETAIL 1 NAR515 NAR406

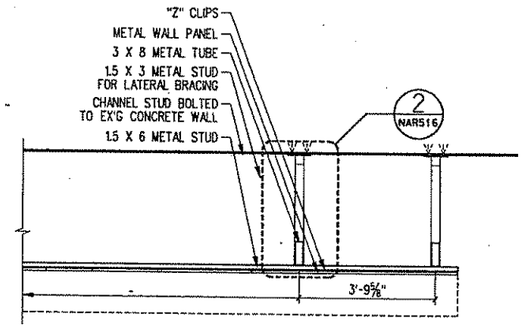

PLAN DETAIL 2 NAR515

100% SUBMISSION

COOPER CARRY
ARCHITECTS
60 WEST 17TH STREET
12TH FLOOR
NEW YORK, NY 10011
212-691-0271
WWW.COOPERCARRY.COM

NO.	DATE	DESCRIPTION

REVISIONS

THE PREPARATION OF THIS DOCUMENT HAS BEEN FINANCED IN PART THROUGH A GRANT FROM THE FEDERAL TRANSIT ADMINISTRATION, U.S. DEPARTMENT OF TRANSPORTATION, UNDER THE URBAN MASS TRANSPORTATION ACT OF 1964, AS AMENDED, FOR THE PORT AUTHORITY OF ALLEGHENY COUNTY, PENNSYLVANIA.

SIGNATURE

DMJM HARRIS | AECOM
FOUR GATEWAY CENTER
20TH FLOOR
PITTSBURGH, PA 15222

APPROVED DATE

DESIGNED	JBW
DRAWN	AW, BM, CF
CHECKED	LC
IN CHARGE	CR
DATE	APR. 03, 2008
SCALE	0 1' 2' 4'

PORT AUTHORITY OF ALLEGHENY COUNTY
PITTSBURGH PENNSYLVANIA

NORTH SHORE CONNECTOR
NORTH SIDE STATION FINISHES
WALL SECTIONS
SLOPED METAL PANEL WALL

Port Authority

CONTRACT NO. NSC-011
DWG. NO. NAR515
SHT.

$DATE$ $TIME$
\\192.168.25.13\PROJECTS\206125\Drawings\NAR515.sht

206125\Drawings\NAR515.sht 04/10/2008 10:59:43 AM

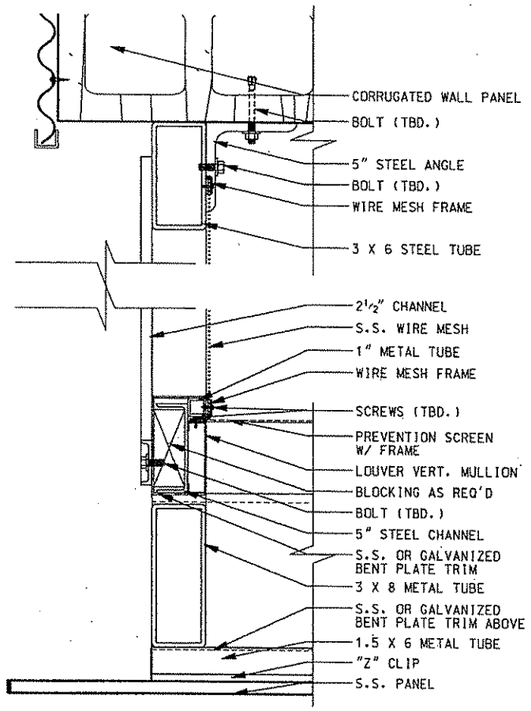

SECTION DETAIL 4 NAR515

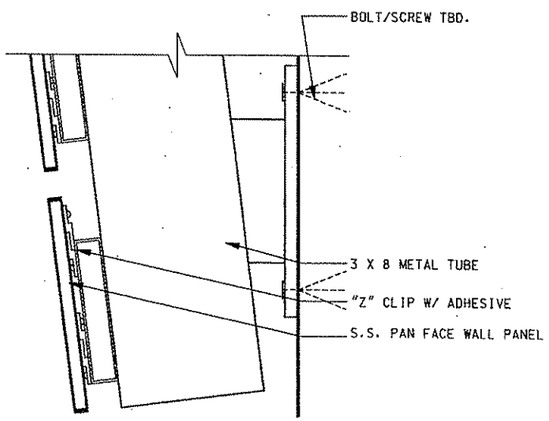

SECTION DETAIL 5 NAR515

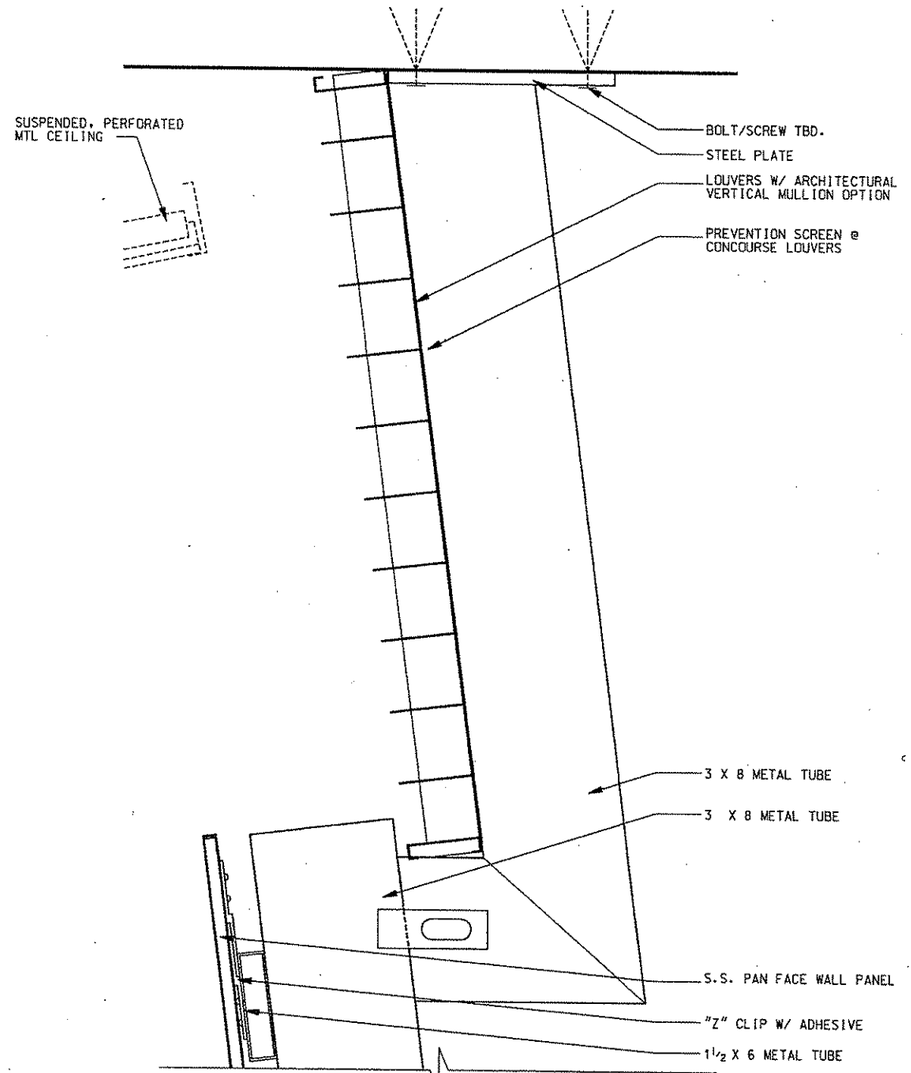

SECTION DETAIL 3 NAR515

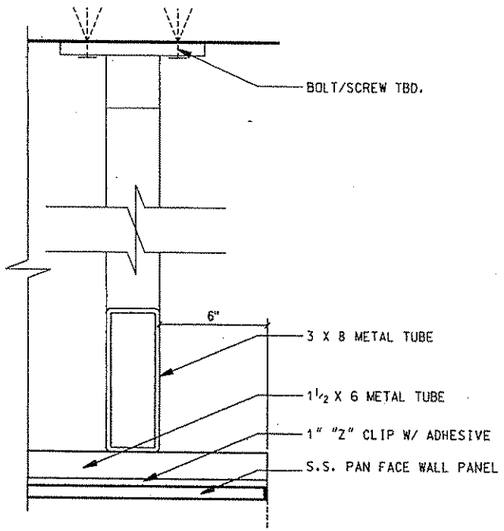

PLAN DETAIL 1 NAR515

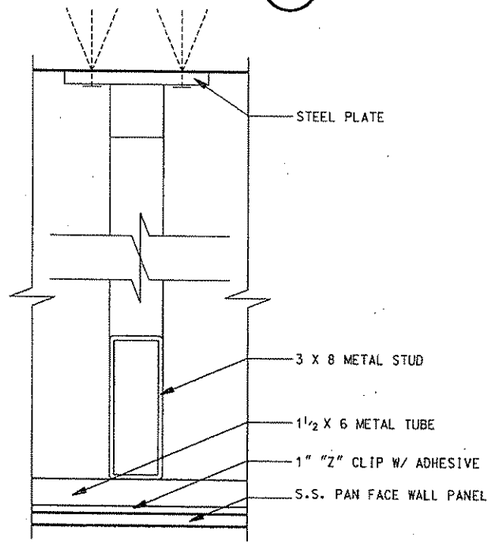

PLAN DETAIL 2 NAR515

100% SUBMISSION

COOPER CARRY
50 WEST 17TH STREET
12TH FLOOR
NEW YORK, NY 10011
212-691-0371
WWW.COOPERCARRY.COM

NO.	DATE	DESCRIPTION

REVISIONS

THE PREPARATION OF THIS DOCUMENT HAS BEEN FINANCED IN PART THROUGH A GRANT FROM THE FEDERAL TRANSIT ADMINISTRATION, U.S. DEPARTMENT OF TRANSPORTATION, UNDER THE URBAN MASS TRANSPORTATION ACT OF 1964, AS AMENDED, FOR THE PORT AUTHORITY OF ALLEGHENY COUNTY, PENNSYLVANIA.

SIGNATURE

DMJM HARRIS | AECOM
FOUR GATEWAY CENTER
20TH FLOOR
PITTSBURGH, PA 15222

APPROVED DATE

DESIGNED	JBW
DRAWN	AW, BM, CF
CHECKED	LC
IN CHARGE	CR
DATE	APR. 03, 2008
SCALE	0" 2" 4" 8"

PORT AUTHORITY OF ALLEGHENY COUNTY
PITTSBURGH PENNSYLVANIA

NORTH SHORE CONNECTOR
NORTH SIDE STATION FINISHES
SECTION DETAILS
SLOPED METAL PANEL WALL

Port Authority

CONTRACT NO. NSC-011
DWG. NO. NAR516 SHT.

#DATE# #TIME# \\192.168.250.13\PROJECTS\206125\Drawings\NAR516.sht

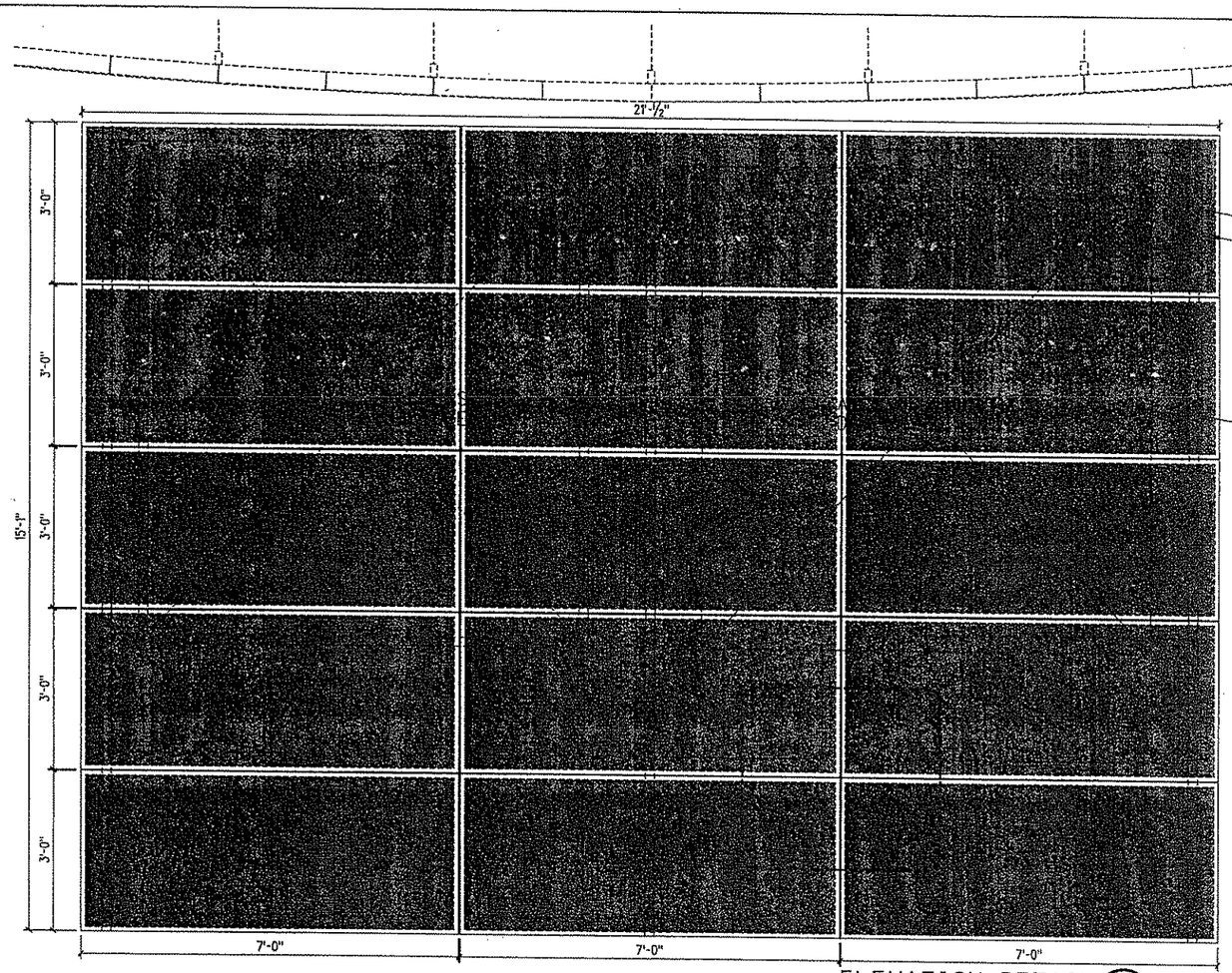

ELEVATION DETAIL 2 NAR525

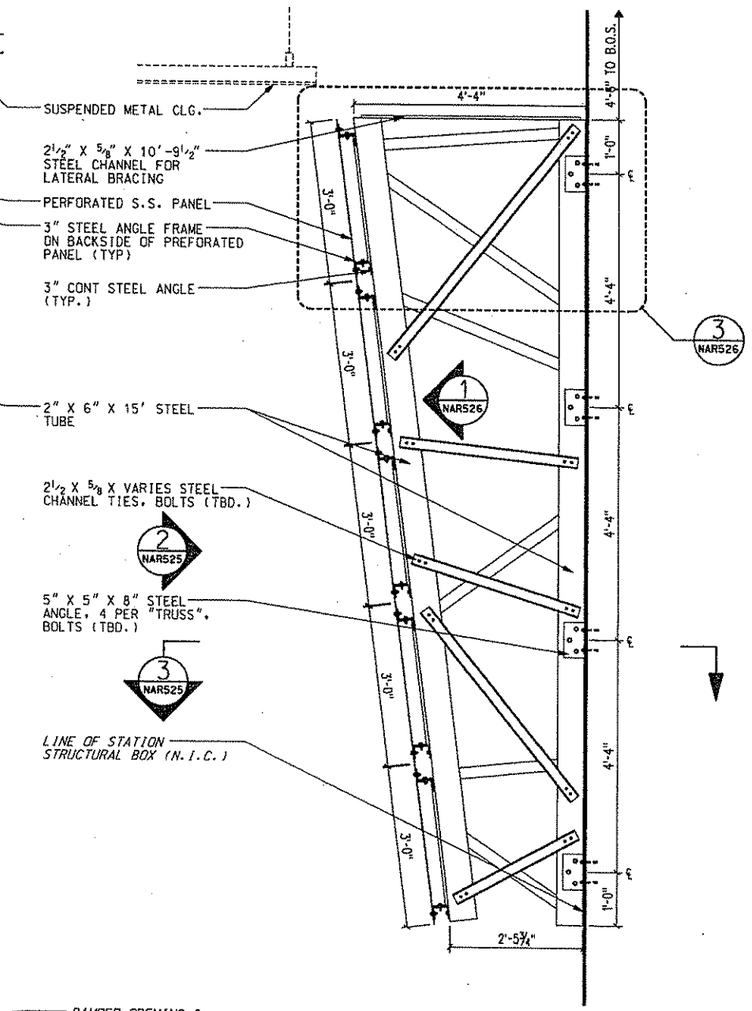

SECTION DETAIL 1 NAR407

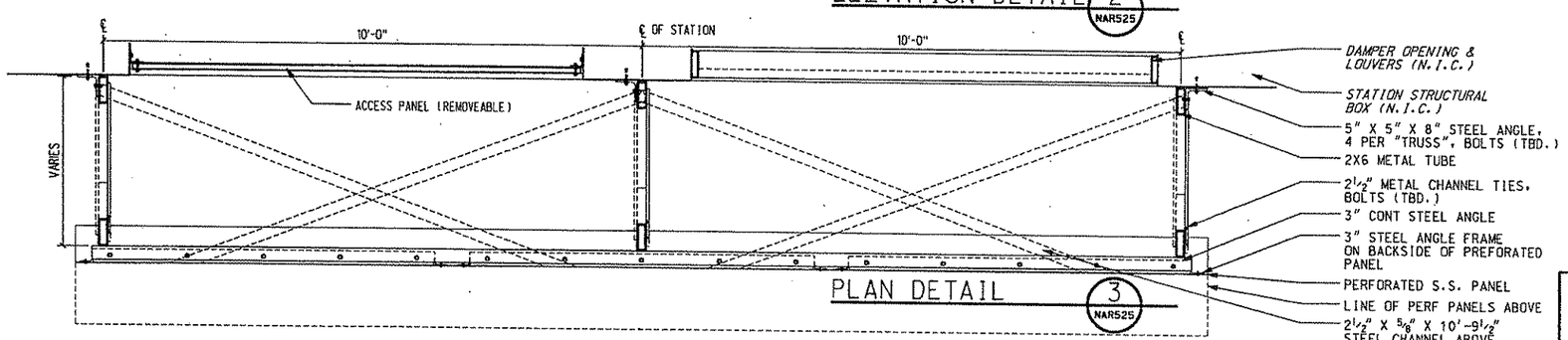

PLAN DETAIL 3 NAR525

100% SUBMISSION

COOPER CARRY
80 WEST 17TH STREET
12TH FLOOR
NEW YORK, NY 10011
212-853-0271
WWW.COOPERCARRY.COM

NO.	DATE	DESCRIPTION

REVISIONS

THE PREPARATION OF THIS DOCUMENT HAS BEEN FINANCED IN PART THROUGH A GRANT FROM THE FEDERAL TRANSIT ADMINISTRATION, U.S. DEPARTMENT OF TRANSPORTATION, UNDER THE URBAN MASS TRANSPORTATION ACT OF 1964, AS AMENDED. FOR THE PORT AUTHORITY OF ALLEGHENY COUNTY, PENNSYLVANIA.

SIGNATURE

DMJM HARRIS | AECOM
FOUR GATEWAY CENTER
20TH FLOOR
PITTSBURGH, PA 15222

APPROVED DATE

DESIGNED	JBW
DRAWN	AW, BM, CF
CHECKED	LC
IN CHARGE	CR
DATE	APR. 03, 2008

SCALE 0' 8" 16" 32"

PORT AUTHORITY OF ALLEGHENY COUNTY
PITTSBURGH PENNSYLVANIA

NORTH SHORE CONNECTOR
NORTH SIDE STATION FINISHES
WALL SECTIONS & ELEVATION
WEST WALL: PERFORATED METAL PANEL

Port Authority

CONTRACT NO. NSC-011

DWG. NO. NAR525 SHT.

NAR525

\\192.168.29.13\PROJECTS\20612S\Drawings\NAR525.dwg

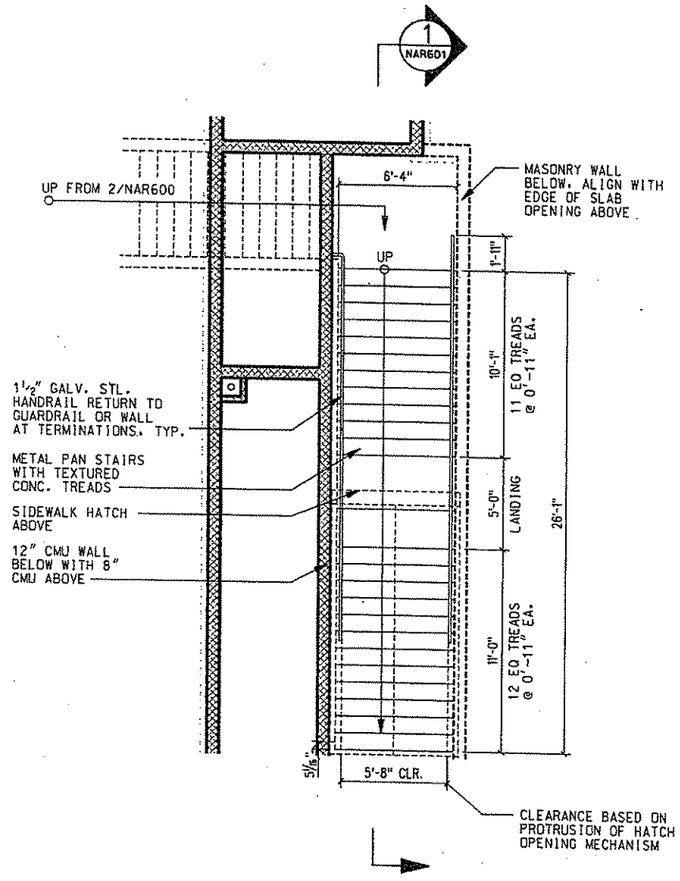

STAIR 'A'
STREET LEVEL PLAN (3 / NAR106)

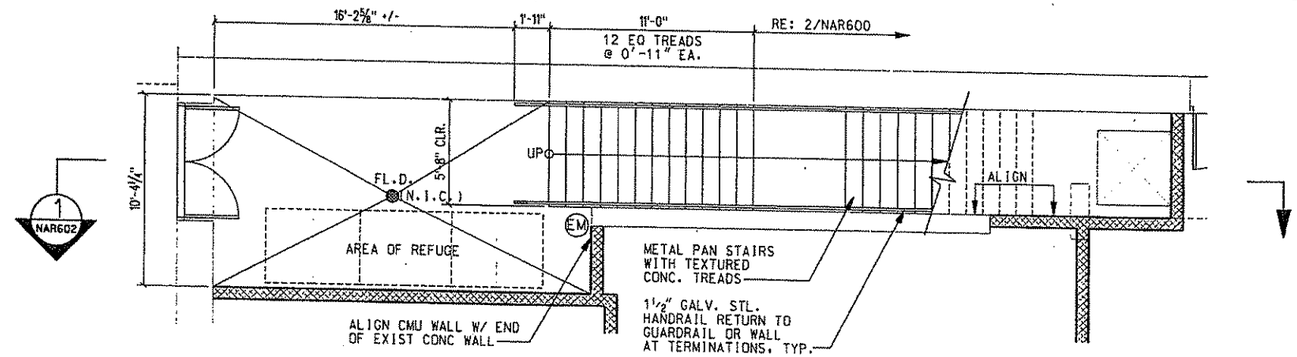

STAIR 'A'
PLATFORM LEVEL PLAN (1 / NAR114)

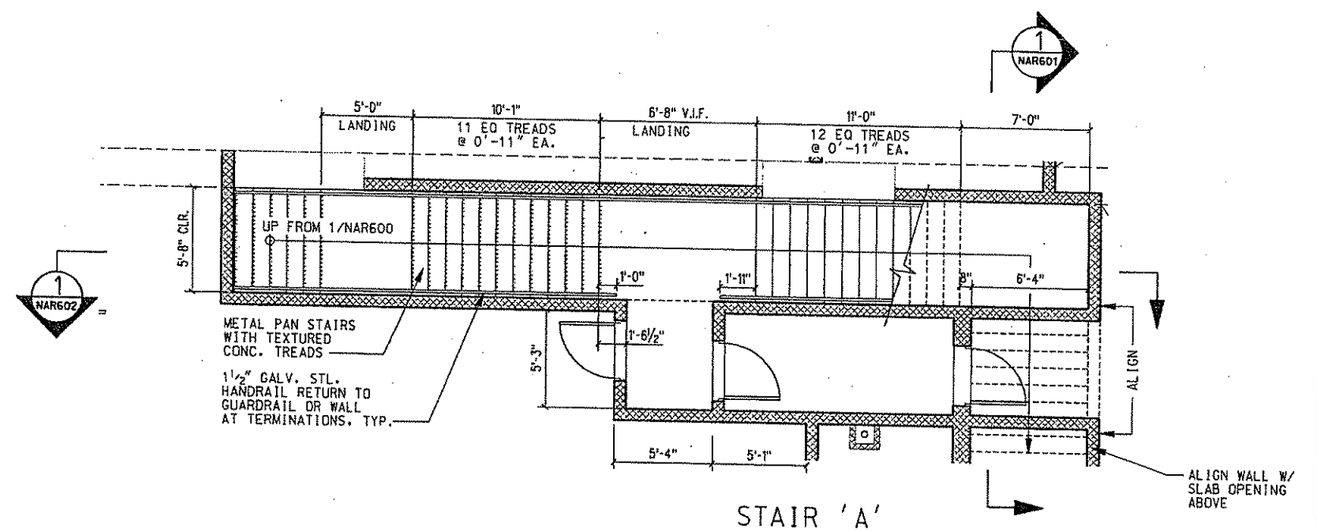

STAIR 'A'
CONCOURSE LEVEL PLAN (2 / NAR110)

100% SUBMISSION

COOPER CARRY
50 WEST 17TH STREET
12TH FLOOR
NEW YORK, NY 10011
212-691-0271
WWW.COOPERCARRY.COM

NO.	DATE	DESCRIPTION

REVISIONS

THE PREPARATION OF THIS DOCUMENT HAS BEEN FINANCED IN PART THROUGH A GRANT FROM THE FEDERAL TRANSIT ADMINISTRATION, U.S. DEPARTMENT OF TRANSPORTATION, UNDER THE URBAN MASS TRANSPORTATION ACT OF 1964, AS AMENDED, FOR THE PORT AUTHORITY OF ALLEGHENY COUNTY, PENNSYLVANIA.

SIGNATURE

DMJM HARRIS | AECOM
FOUR GATEWAY CENTER
20TH FLOOR
PITTSBURGH, PA 15222

APPROVED DATE

DESIGNED	JBW
DRAWN	AW, BM, CF
CHECKED	LC
IN CHARGE	CR
DATE	APR. 03, 2008
SCALE	0' 2' 4' 8'

PORT AUTHORITY OF ALLEGHENY COUNTY
PITTSBURGH PENNSYLVANIA

NORTH SHORE CONNECTOR
NORTH SIDE STATION FINISHES
STAIR 'A'
PLANS

Port Authority

CONTRACT NO. NSC-011
DWG. NO. NAR600 SHT. 77

$DATE6 $TIME$
\\92.168.25\J3\PROJECTS\20625\Drawings\NAR600.sht

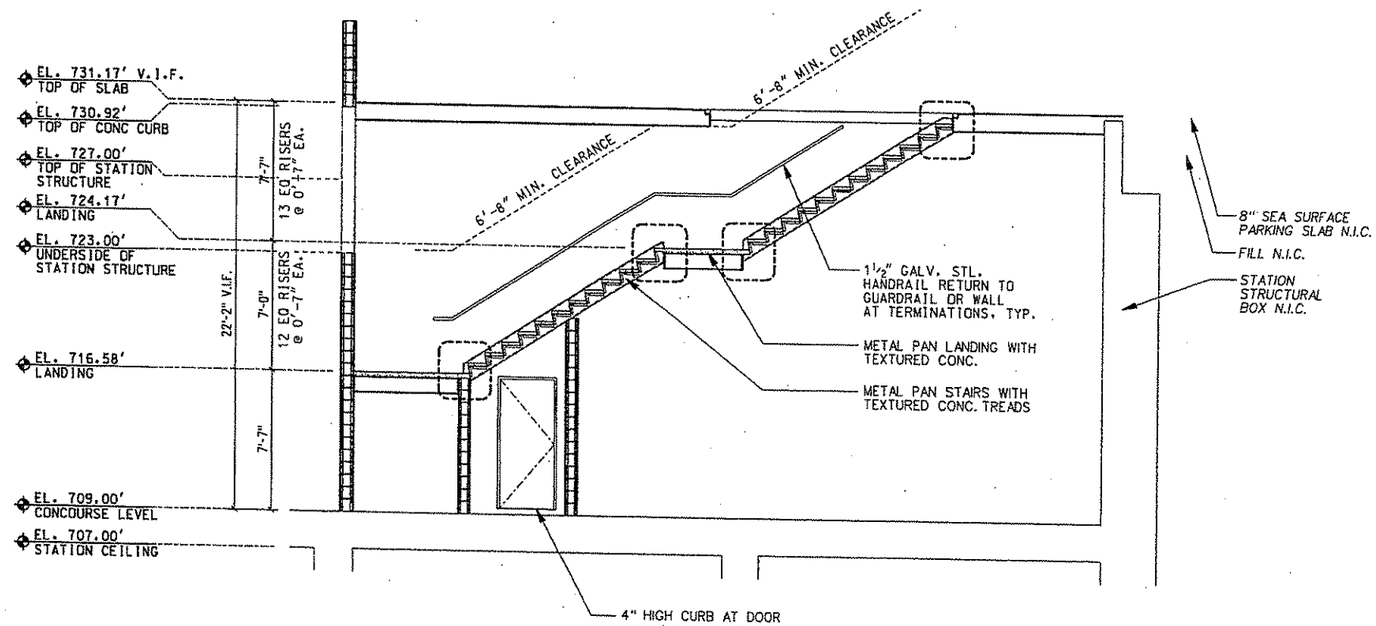

STAIR 'A' SECTION 1 NAR600

100% SUBMISSION

COOPER CARRY
50 WEST 17TH STREET
12TH FLOOR
NEW YORK, NY 10011
212-691-0371
WWW.COOPERCARRY.COM

NO.	DATE	DESCRIPTION

REVISIONS

THE PREPARATION OF THIS DOCUMENT HAS BEEN FINANCED IN PART THROUGH A GRANT FROM THE FEDERAL TRANSIT ADMINISTRATION, U.S. DEPARTMENT OF TRANSPORTATION, UNDER THE URBAN MASS TRANSPORTATION ACT OF 1964, AS AMENDED. FOR THE PORT AUTHORITY OF ALLEGHENY COUNTY, PENNSYLVANIA.

SIGNATURE

DMJM HARRIS | AECOM
FOUR GATEWAY CENTER
20TH FLOOR
PITTSBURGH, PA 15222

APPROVED DATE

DESIGNED	JBW
DRAWN	AW, BM, CF
CHECKED	LC
IN CHARGE	CR
DATE	APR. 03, 2008
SCALE	0' 2' 4' 8'

PORT AUTHORITY OF ALLEGHENY COUNTY
PITTSBURGH PENNSYLVANIA

NORTH SHORE CONNECTOR
NORTH SIDE STATION FINISHES
STAIR 'A'
SECTION

Port Authority

CONTRACT NO. NSC-011
DWG. NO. NAR601 SHT. 77

\\192.168.25.13\PROJECTS\2006\25\Drawings\NAR601.sht
$DATE$ $TIME$

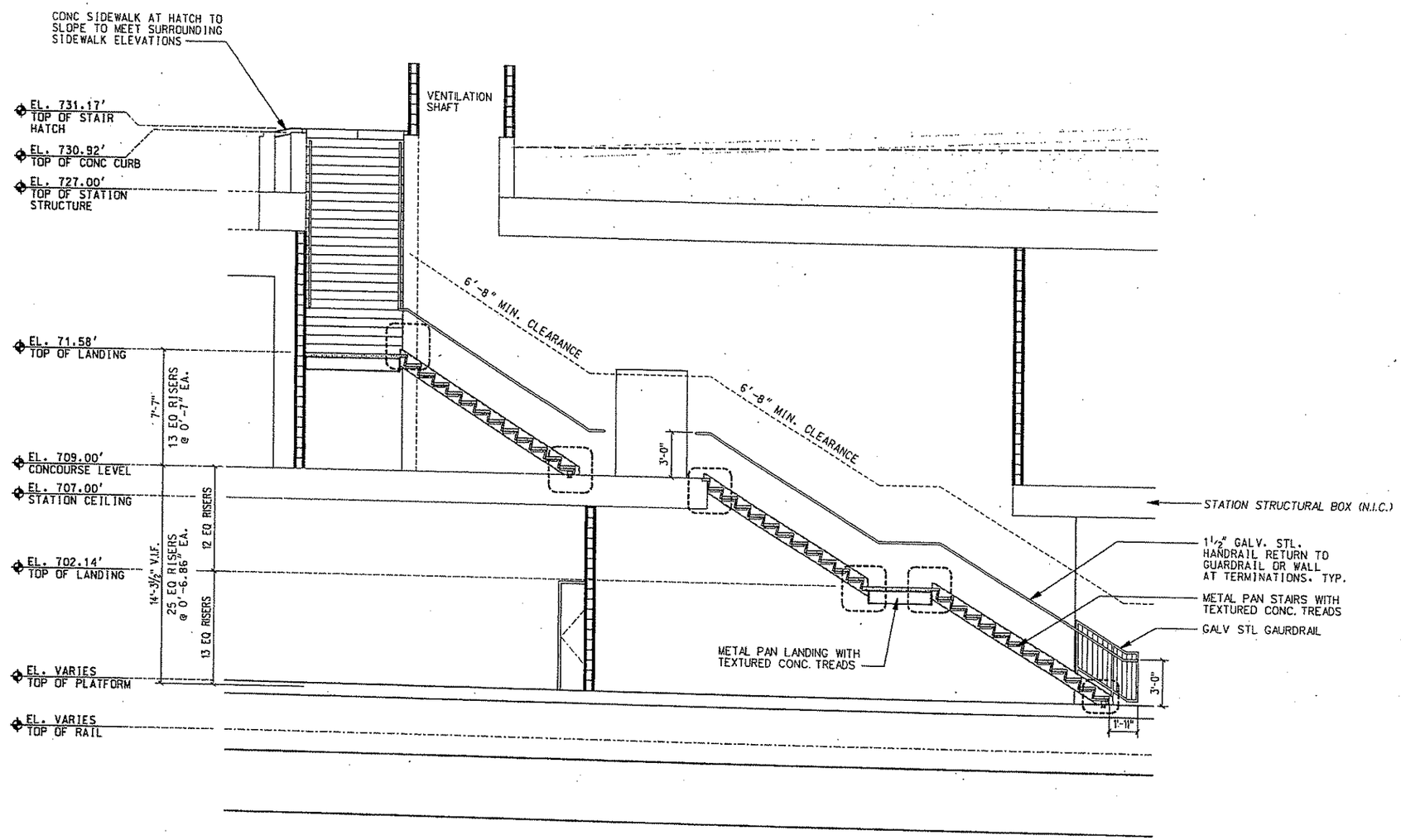

STAIR 'A' SECTION 1 NAR600

100% SUBMISSION

COOPER CARRY
50 WEST 17TH STREET
12TH FLOOR
NEW YORK, NY 10011
212-691-0371
WWW.COOPERCARRY.COM

NO.	DATE	DESCRIPTION

REVISIONS

THE PREPARATION OF THIS DOCUMENT HAS BEEN FINANCED IN PART THROUGH A GRANT FROM THE FEDERAL TRANSIT ADMINISTRATION, U.S. DEPARTMENT OF TRANSPORTATION, UNDER THE URBAN MASS TRANSPORTATION ACT OF 1964, AS AMENDED. FOR THE PORT AUTHORITY OF ALLEGHENY COUNTY, PENNSYLVANIA.

SIGNATURE

DMJM HARRIS | AECOM
FOUR GATEWAY CENTER
20TH FLOOR
PITTSBURGH, PA 15222

APPROVED DATE

DESIGNED	JBW
DRAWN	AW, BM, CF
CHECKED	LC
IN CHARGE	CR
DATE	APR. 03, 2008
SCALE	0' 2' 4' 8'

PORT AUTHORITY OF ALLEGHENY COUNTY
PITTSBURGH PENNSYLVANIA

NORTH SHORE CONNECTOR
NORTH SIDE STATION FINISHES
STAIR 'A'
SECTION

Port Authority

CONTRACT NO. NSC-011
DWG. NO. NAR602 SHT. 77

$DATE$ $TIME$
\\192.168.25.13\PROJECTS\20825\Drawings\NAR602.sht

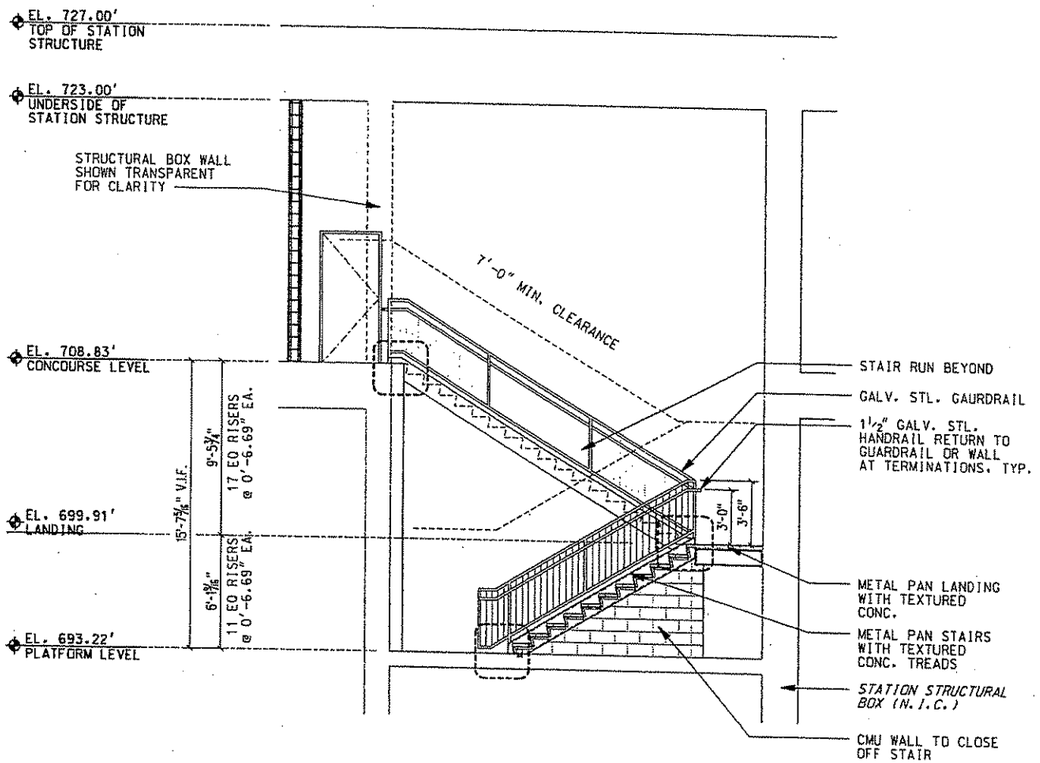

STAIR 'C' SECTION 3 NAR604

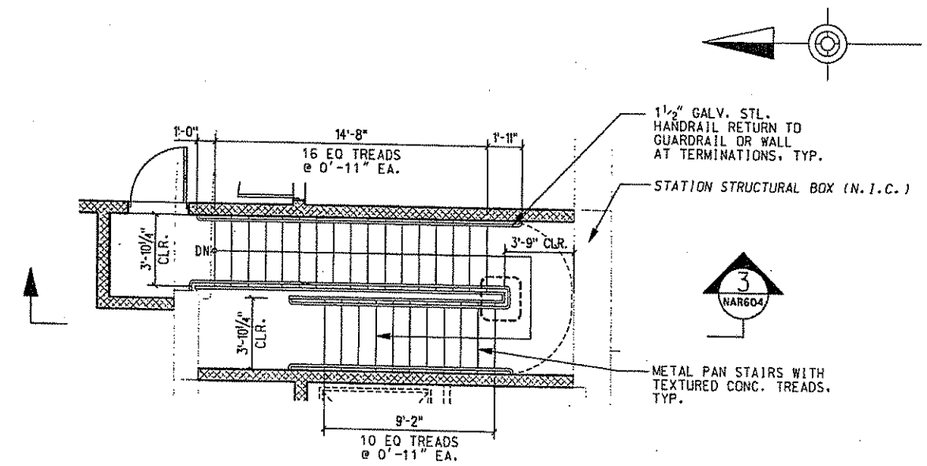

STAIR 'C' CONCOURSE LEVEL PLAN 1 NAR109

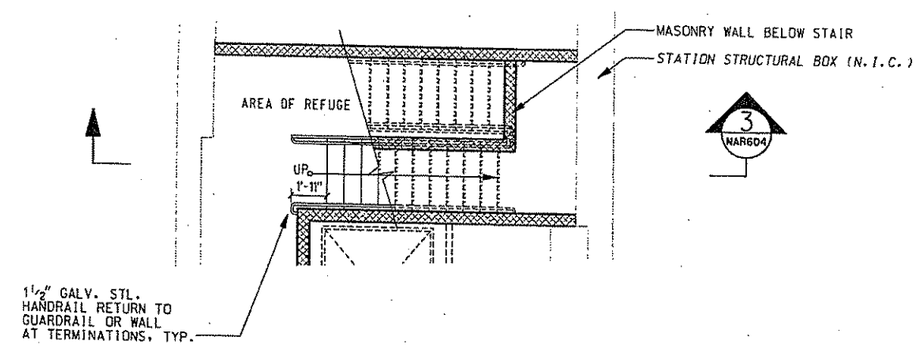

STAIR 'C' PLATFORM LEVEL PLAN 2 NAR113

100% SUBMISSION

COOPER CARRY
50 WEST 37TH STREET
12TH FLOOR
NEW YORK, NY 10011
212-991-0271
WWW.COOPERCARRY.COM

NO.	DATE	DESCRIPTION

REVISIONS

THE PREPARATION OF THIS DOCUMENT HAS BEEN FINANCED IN PART THROUGH A GRANT FROM THE FEDERAL TRANSIT ADMINISTRATION, U.S. DEPARTMENT OF TRANSPORTATION, UNDER THE URBAN MASS TRANSPORTATION ACT OF 1964, AS AMENDED, FOR THE PORT AUTHORITY OF ALLEGHENY COUNTY, PENNSYLVANIA.

SIGNATURE

DMJM HARRIS | AECOM
FOUR GATEWAY CENTER
20TH FLOOR
PITTSBURGH, PA 15222

APPROVED DATE

DESIGNED	JBW
DRAWN	AW, BM, CF
CHECKED	LC
IN CHARGE	CR
DATE	APR. 03, 2008
SCALE	0' 2' 4' 8'

PORT AUTHORITY OF ALLEGHENY COUNTY
PITTSBURGH PENNSYLVANIA

NORTH SHORE CONNECTOR
NORTH SIDE STATION FINISHES
STAIR 'C'
PLANS & SECTION

Port Authority

CONTRACT NO. NSC-011
DWG. NO. NAR604 SHT. 77

$DATE$ $TIME$
\\192.168.25.13\PROJECTS\206025\Drawings\NAR604.sht

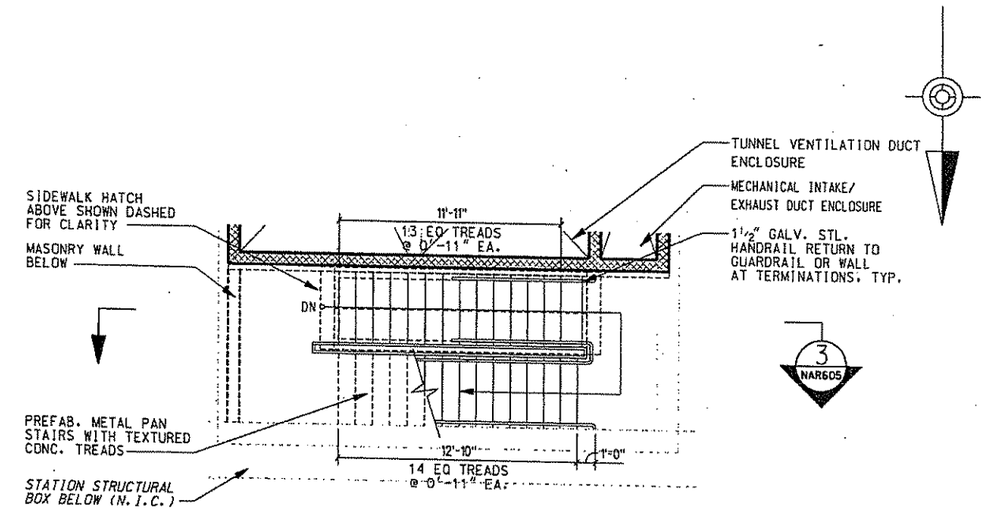

STAIR 'D'
STREET LEVEL PLAN (1 / NAR104)

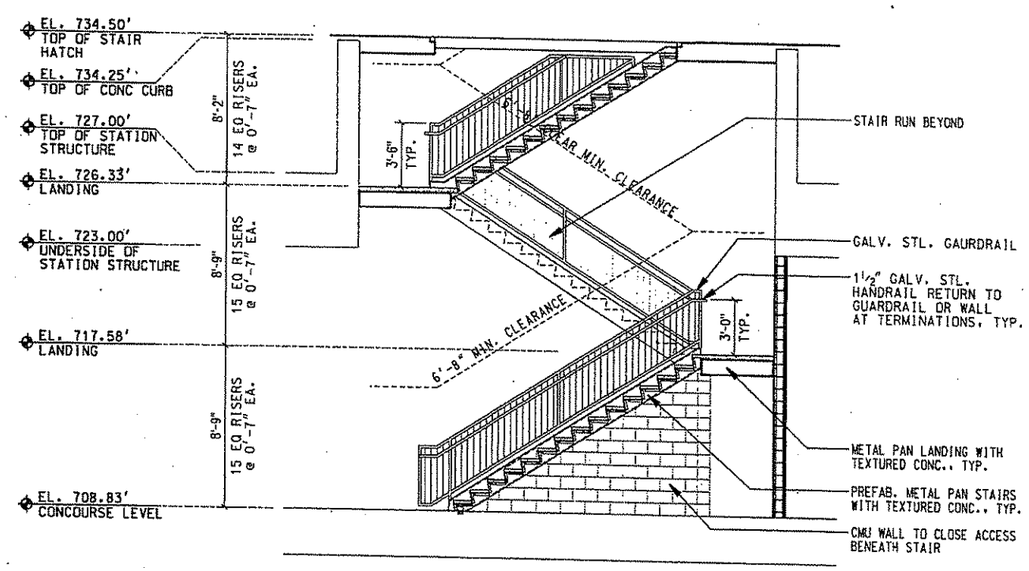

STAIR 'D' SECTION (3 / NAR605)

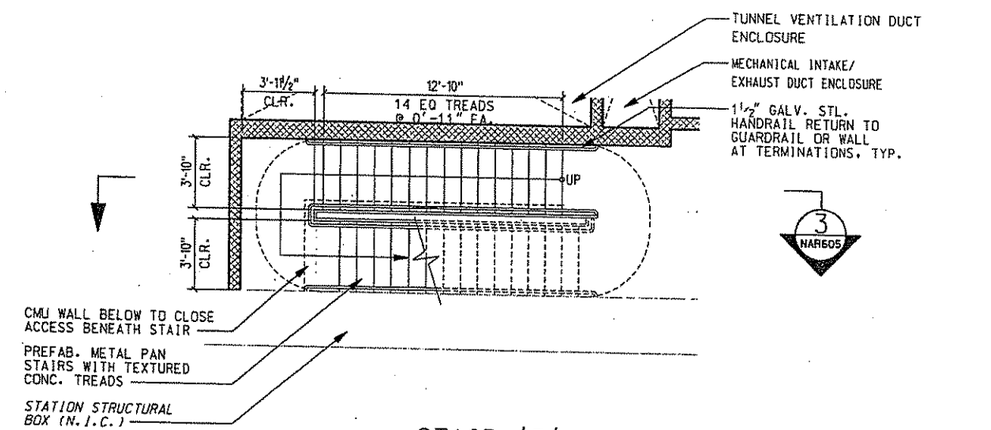

STAIR 'D'
CONCOURSE LEVEL PLAN (2 / NAR108)

100% SUBMISSION

COOPER & CARRY
50 WEST 17TH STREET
12TH FLOOR
NEW YORK, NY 10011
212-691-0271
WWW.COOPERCARRY.COM

NO.	DATE	DESCRIPTION

REVISIONS

THE PREPARATION OF THIS DOCUMENT HAS BEEN FINANCED IN PART THROUGH A GRANT FROM THE FEDERAL TRANSIT ADMINISTRATION, U.S. DEPARTMENT OF TRANSPORTATION, UNDER THE URBAN MASS TRANSPORTATION ACT OF 1964, AS AMENDED, FOR THE PORT AUTHORITY OF ALLEGHENY COUNTY, PENNSYLVANIA.

SIGNATURE

DMJM HARRIS | AECOM
FOUR GATEWAY CENTER
20TH FLOOR
PITTSBURGH, PA 15222

APPROVED DATE

DESIGNED	JBW
DRAWN	AW, BM, CF
CHECKED	LC
IN CHARGE	CR
DATE	APR. 03, 2008
SCALE	0' 2' 4' 8'

PORT AUTHORITY OF ALLEGHENY COUNTY
PITTSBURGH PENNSYLVANIA

NORTH SHORE CONNECTOR
NORTH SIDE STATION FINISHES
STAIR 'D'
PLANS & SECTION

Port Authority

CONTRACT NO. NSC-011
DWG.NO. NAR605 SHT. 77

@DATE$ $TIME$
\\V92.168.250.1\V:PROJECTS\2006125\Drawings\NAR605.sht

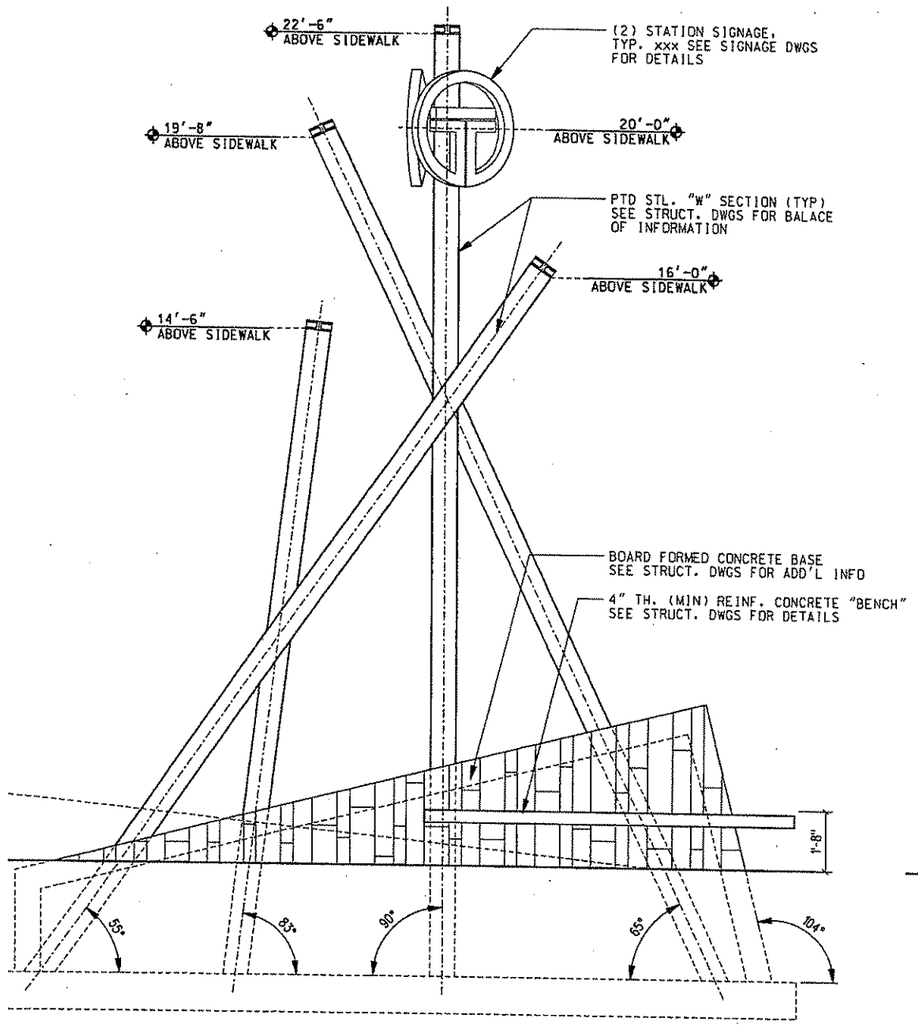

ELEVATION 4 NAR700

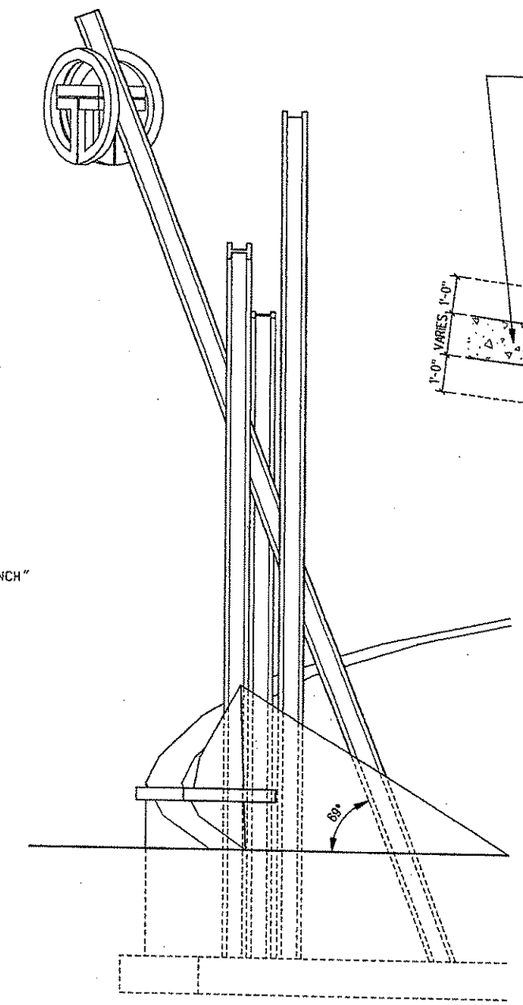

ELEVATION 3 NAR700

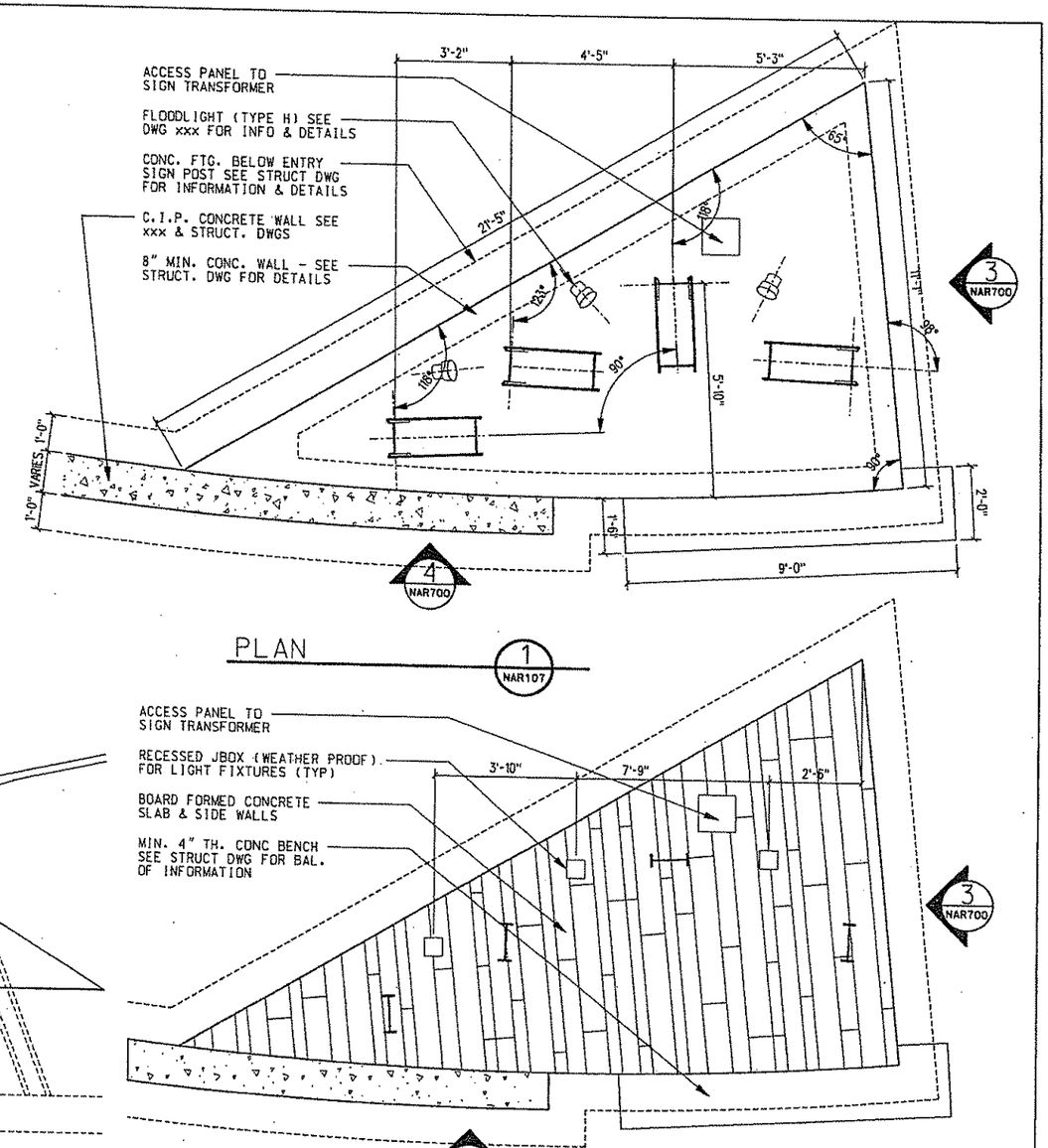

PLAN 1 NAR107

AERIAL VIEW 2 NAR107

100% SUBMISSION

PORT AUTHORITY OF ALLEGHENY COUNTY
PITTSBURGH PENNSYLVANIA

NORTH SHORE CONNECTOR
NORTH SIDE STATION FINISHES
ENTRANCE SIGNAGE POLE
PLANS & ELEVATIONS

Port Authority

CONTRACT NO. NSC-011
DWG. NO. NAR700 SHT. 77

COOPER CARRY
50 WEST 17TH STREET
12TH FLOOR
NEW YORK, NY 10011
212-691-0221
WWW.COOPERCARRY.COM

NO.	DATE	DESCRIPTION

REVISIONS

THE PREPARATION OF THIS DOCUMENT HAS BEEN FINANCED IN PART THROUGH A GRANT FROM THE FEDERAL TRANSIT ADMINISTRATION, U.S. DEPARTMENT OF TRANSPORTATION, UNDER THE URBAN MASS TRANSPORTATION ACT OF 1964, AS AMENDED, FOR THE PORT AUTHORITY OF ALLEGHENY COUNTY, PENNSYLVANIA.

SIGNATURE

DMJM HARRIS | AECOM
FOUR GATEWAY CENTER
20TH FLOOR
PITTSBURGH, PA 15222

APPROVED DATE

DESIGNED	JBW
DRAWN	AW, BM, CF
CHECKED	LC
IN CHARGE	CR
DATE	APR. 03, 2008
SCALE	0' 1' 2' 4'

$DATE$ $TIME$
\\192.168.25.113\PROJECTS\20625\Drawings\NAR700.sht

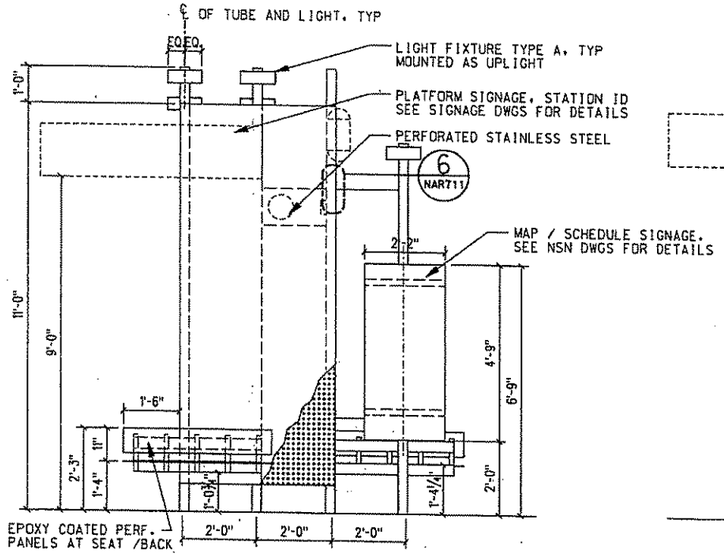

ELEVATION 4 NAR710

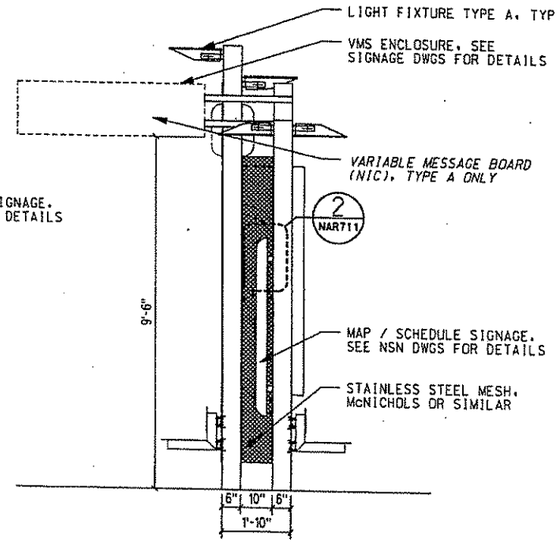

ELEVATION 3 NAR710

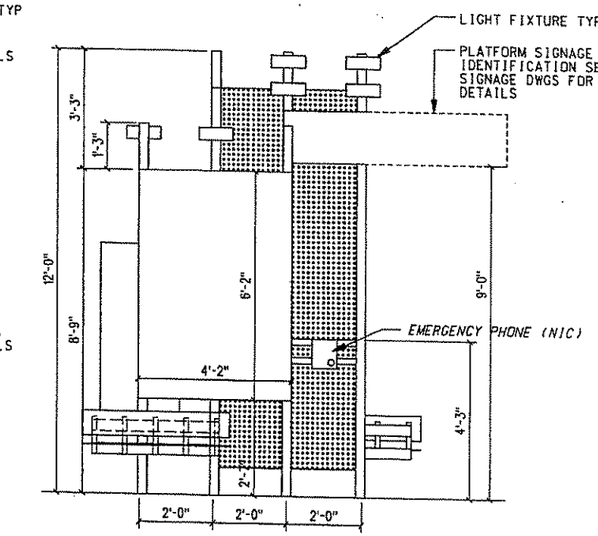

ELEVATION 2 NAR710

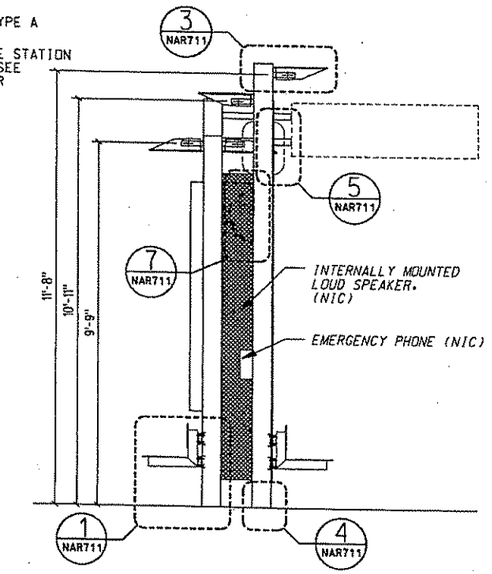

ELEVATION 1 NAR710

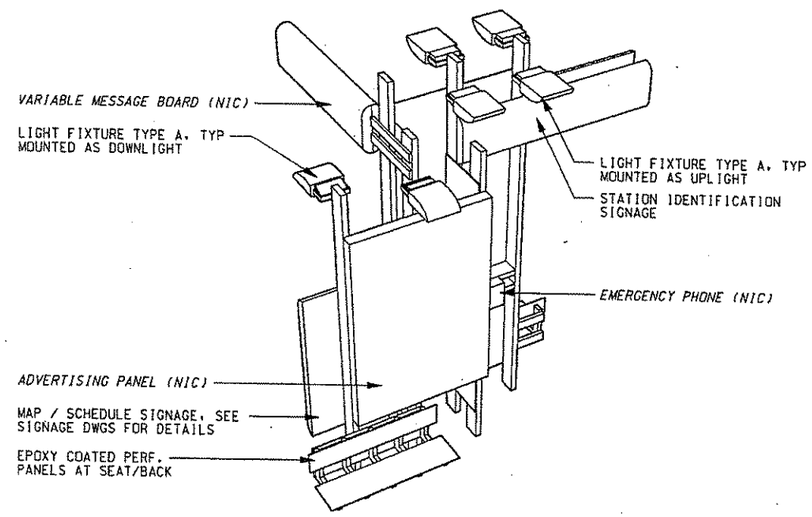

VIEW OF SIGNAGE POLE 7

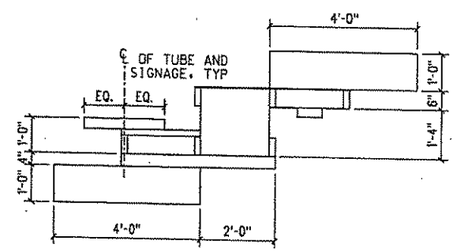

PLAN 6 NAR113 NAR114

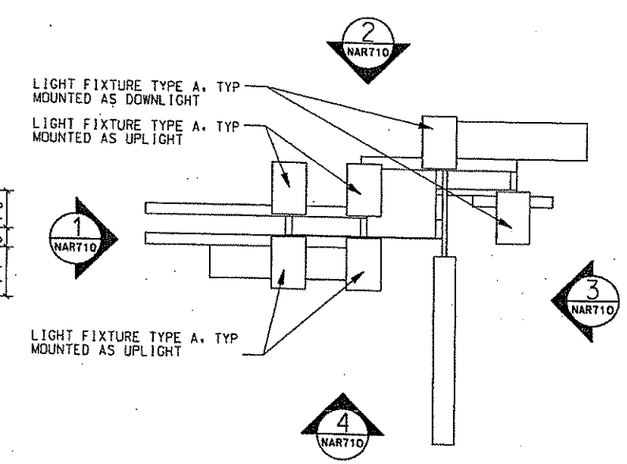

PLAN - AERIAL VIEW 5 NAR113 NAR114

100% SUBMISSION

COOPER CARRY
50 WEST 37TH STREET
12TH FLOOR
NEW YORK, NY 10011
212-691-0271
WWW.COOPERCARRY.COM

NO.	DATE	DESCRIPTION

REVISIONS

THE PREPARATION OF THIS DOCUMENT HAS BEEN FINANCED IN PART THROUGH A GRANT FROM THE FEDERAL TRANSIT ADMINISTRATION, U.S. DEPARTMENT OF TRANSPORTATION, UNDER THE URBAN MASS TRANSPORTATION ACT OF 1964, AS AMENDED. FOR THE PORT AUTHORITY OF ALLEGHENY COUNTY, PENNSYLVANIA.

SIGNATURE

DMJM HARRIS | AECOM
FOUR GATEWAY CENTER
20TH FLOOR
PITTSBURGH, PA 15222

APPROVED DATE

DESIGNED	JBW
DRAWN	AW, BM, CF
CHECKED	LC
IN CHARGE	CR
DATE	APR. 03, 2008
SCALE	0 1' 2' 4'

PORT AUTHORITY OF ALLEGHENY COUNTY
PITTSBURGH PENNSYLVANIA

NORTH SHORE CONNECTOR
NORTH SIDE STATION FINISHES
PLATFORM SIGNAGE POLE
PLANS & ELEVATIONS

Port Authority

CONTRACT NO. NSC-011
DWG. NO. NAR710 SHT. 77

@DATE@ @TIME@
\\192.168.25.13\PROJECTS\206125\Drawings\NAR710.sht

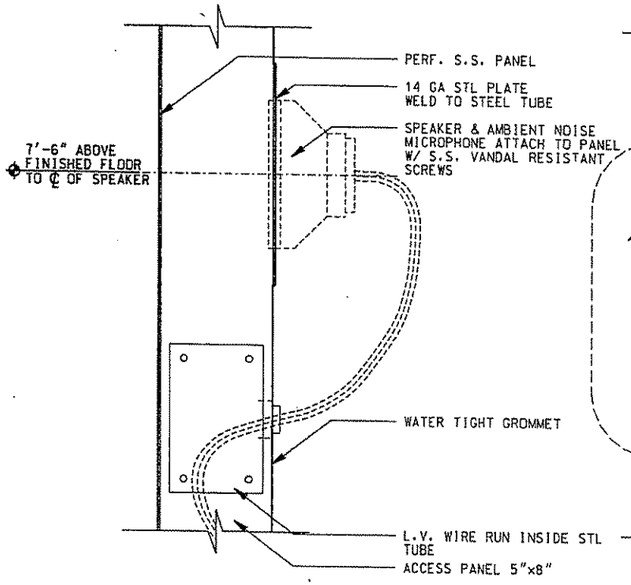

DETAIL AT SPEAKER 7 NAR710

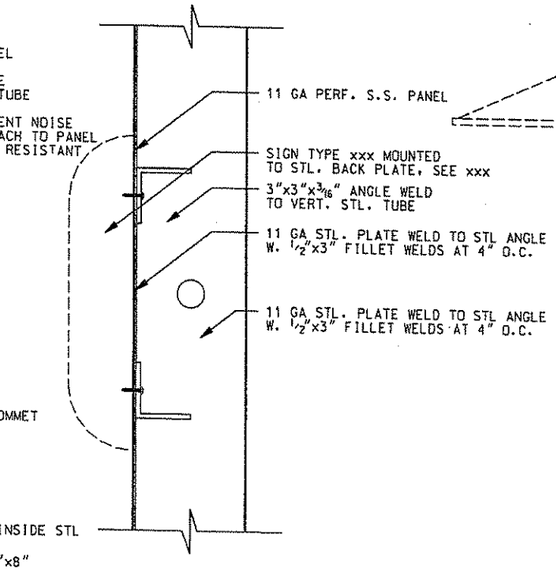

DETAIL AT NORTH SIDE STATION SIGN 5 NAR710

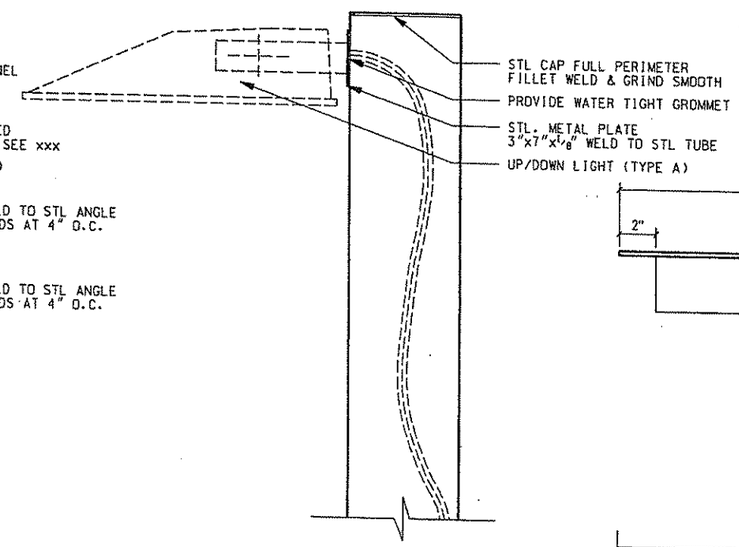

DETAIL AT LIGHT 3 NAR710

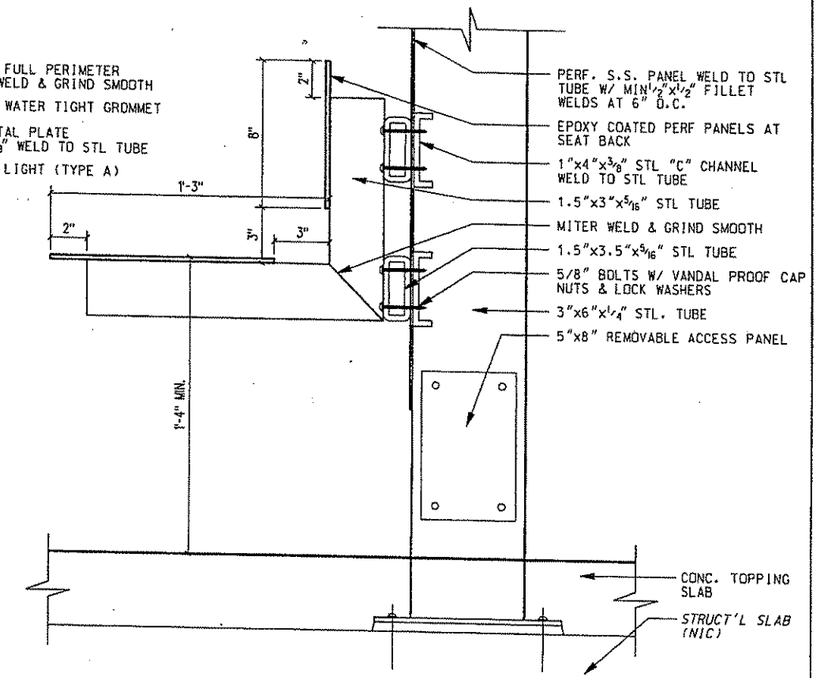

BENCH SECTION 1 NAR710

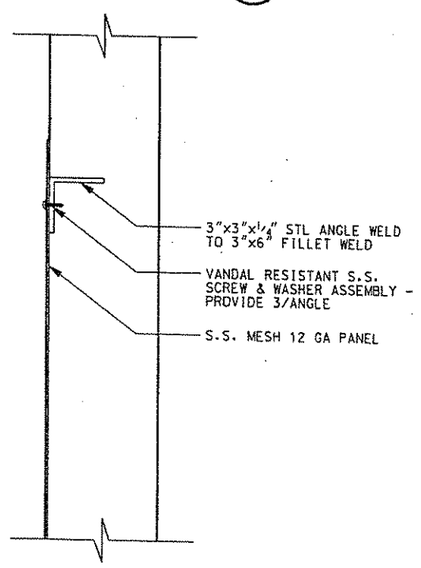

MESH CLOSURE PANEL DETAIL 6 NAR710

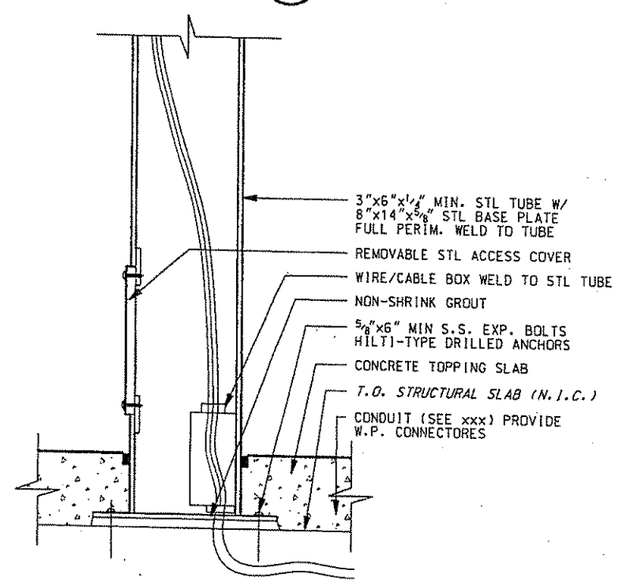

STL. TUBE BASE SECTION 4 NAR710

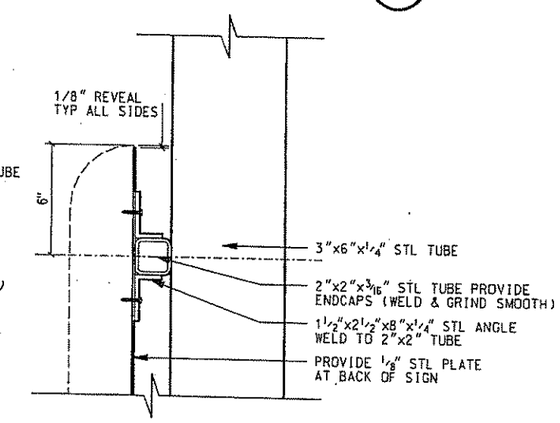

SYSTEM MAP DETAIL 2 NAR710

100% SUBMISSION

COOPER CARRY
50 WEST 17TH STREET
12TH FLOOR
NEW YORK, NY 10011
212-991-0271
WWW.COOPERCARRY.COM

NO.	DATE	DESCRIPTION

REVISIONS

THE PREPARATION OF THIS DOCUMENT HAS BEEN FINANCED IN PART THROUGH A GRANT FROM THE FEDERAL TRANSIT ADMINISTRATION, U.S. DEPARTMENT OF TRANSPORTATION, UNDER THE URBAN MASS TRANSPORTATION ACT OF 1964, AS AMENDED, FOR THE PORT AUTHORITY OF ALLEGHENY COUNTY, PENNSYLVANIA.

SIGNATURE

DMJM HARRIS | AECOM
FOUR GATEWAY CENTER
20TH FLOOR
PITTSBURGH, PA 15222

APPROVED DATE

DESIGNED	JBW
DRAWN	AW, BM, CF
CHECKED	LC
IN CHARGE	CR
DATE	APR. 03, 2008
SCALE	0 2" 4" 8"

PORT AUTHORITY OF ALLEGHENY COUNTY
PITTSBURGH PENNSYLVANIA

NORTH SHORE CONNECTOR
NORTH SIDE STATION FINISHES
PLATFORM SIGNAGE POLE
DETAILS

Port Authority

CONTRACT NO. NSC-011
DWG. NO. NAR711
SHT.

$DATE$ $TIME$
\\192.168.250.13\PROJECTS\206125\Drawings\NAR711.aht

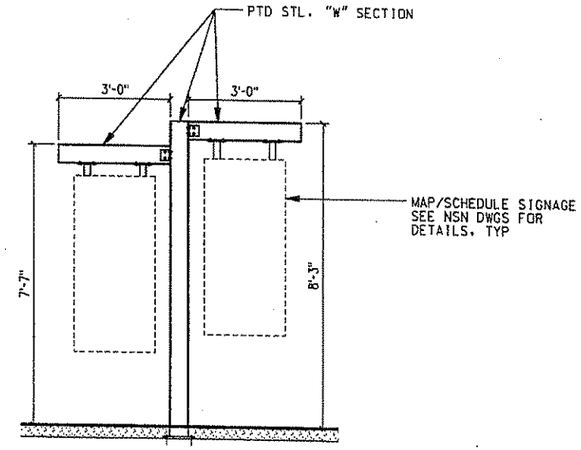

MAP/SCHEDULE SIGNAGE POLE ELEVATION (5 / NAR720) NAR403 NAR404

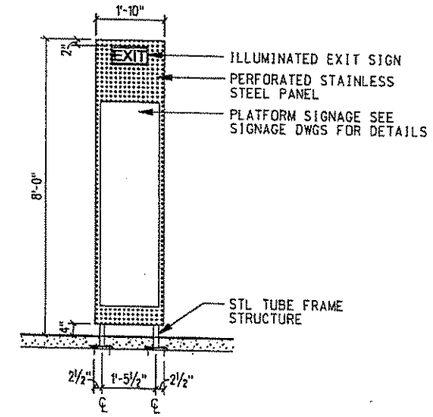

DIRECTIONAL SIGNAGE POLE FRONT ELEVATION (3 / NAR720)

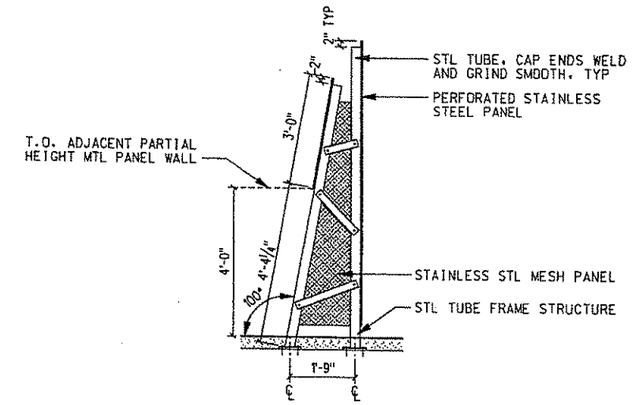

DIRECTIONAL SIGNAGE POLE SIDE ELEVATION (1 / NAR620) NAR720

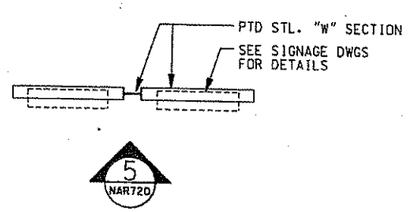

MAP/SCHEDULE POLE PLAN (6 / NAR109) NAR111

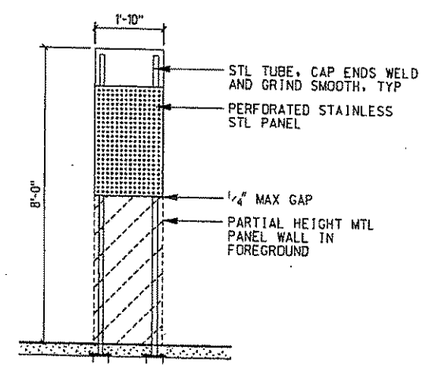

DIRECTIONAL SIGNAGE POLE BACK ELEVATION (4 / NAR720)

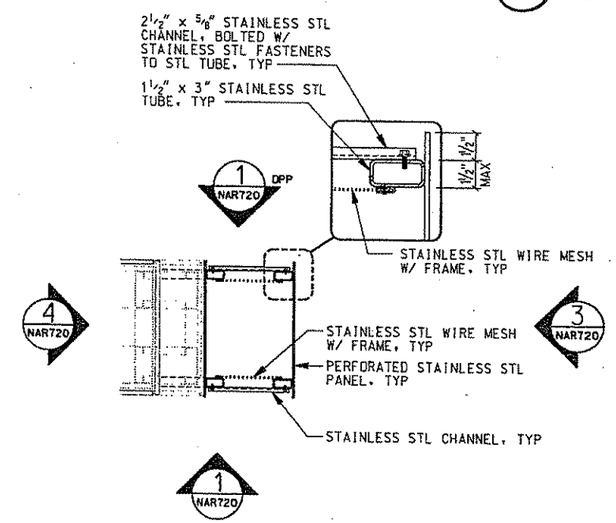

DIRECTIONAL SIGNAGE POLE PLAN (2 / NAR620)

0' 6" 1' 2'

100% SUBMISSION

COOPER CARRY
50 WEST 17TH STREET
12TH FLOOR
NEW YORK, NY 10011
212-691-0371
WWW.COOPERCARRY.COM

NO.	DATE	DESCRIPTION

REVISIONS

THE PREPARATION OF THIS DOCUMENT HAS BEEN FINANCED IN PART THROUGH A GRANT FROM THE FEDERAL TRANSIT ADMINISTRATION, U.S. DEPARTMENT OF TRANSPORTATION, UNDER THE URBAN MASS TRANSPORTATION ACT OF 1964, AS AMENDED. FOR THE PORT AUTHORITY OF ALLEGHENY COUNTY, PENNSYLVANIA.

SIGNATURE

DMJM HARRIS | AECOM
FOUR GATEWAY CENTER
20TH FLOOR
PITTSBURGH, PA 15222

APPROVED DATE

DESIGNED	JBW
DRAWN	AW, BM, CF
CHECKED	LC
IN CHARGE	CR
DATE	APR. 03, 2008
SCALE	0' 1' 2' 4'

PORT AUTHORITY OF ALLEGHENY COUNTY
PITTSBURGH PENNSYLVANIA

NORTH SHORE CONNECTOR
NORTH SIDE STATION FINISHES
SIGNAGE FRAME STRUCTURES
PLANS & ELEVATIONS

Port Authority

CONTRACT NO. NSC-011
DWG. NO. NAR720
SHT. 77

\\192.168.25.13\PROJECTS\206025\Drawings\NAR720.sht
$DATE$ $TIME$

MATCH LINE DWG. NAR911

MATCH LINE DWG. NAR908

MATCH LINE DWG. NAR910

COMMUNICATIONS ROOM M08

MAINT. SUPPORT M09

CUSTODIAL TRASH ROOM M07

PAAC POLICE M14

UNDERSIDE OF STATION STRUCTURE @ 727.00'

UNDERSIDE OF STATION STRUCTURE @ 723.00'

GALVALUME CORRUGATED MTL. PANELS, TYP

WALL MOUNTED WALL WASHER, TYP.

GLASS WALL

DELUGE SPRINKLER HEAD CONNECTION, TYP.

DOWNLIGHT, TYP

SPRINKLER, TYP SEE FIRE PROTECTION DWGS FOR DETAILS

6'-8" TYP.

12'-0"

CL CORRIDOR

STAIR 'C' SHAFT

ELEV. SHAFT

1'-0" REVEAL

MECHANICAL ROOM 14'-0" A.F.F. M10

4'-0" TYP.

DOOR

CORRIDOR M13

WOMEN M11

MEN M12

VENDOR OPTICS M15

CEILING MOUNTED COMMUNICATION DEVICES, TYP. (N.I.C.)

ANTENNA (NIC)

PERFORATED METAL PANEL CEILING, SEE NAR920 FOR DETAILS

SMOKE EXHAUST DUCT (N.I.C.)

LIGHT FIXTURE, TYP.

CEILING MOUNTED FIRE ALARM AUDIO/VISUAL DEVICE, TYP.

6040+00

6041+00

6042+00

100% SUBMISSION

COOPER CARRY
80 WEST 17TH STREET
12TH FLOOR
NEW YORK, NY 10011
212-691-0271
WWW.COOPERCARRY.COM

NO.	DATE	DESCRIPTION

REVISIONS

THE PREPARATION OF THIS DOCUMENT HAS BEEN FINANCED IN PART THROUGH A GRANT FROM THE FEDERAL TRANSIT ADMINISTRATION, U.S. DEPARTMENT OF TRANSPORTATION, UNDER THE URBAN MASS TRANSPORTATION ACT OF 1964, AS AMENDED, FOR THE PORT AUTHORITY OF ALLEGHENY COUNTY, PENNSYLVANIA.

SIGNATURE

DMJM HARRIS | AECOM
FOUR GATEWAY CENTER
20TH FLOOR
PITTSBURGH, PA 15222

APPROVED DATE

DESIGNED	JBW
DRAWN	AW, BM, CF
CHECKED	LC
IN CHARGE	CR
DATE	APR. 03, 2008
SCALE	0' 4' 8' 16'

PORT AUTHORITY OF ALLEGHENY COUNTY
PITTSBURGH PENNSYLVANIA

NORTH SHORE CONNECTOR
NORTH SIDE STATION FINISHES
PARTIAL CONCOURSE LEVEL REFLECTED CEILING PLAN
PLAN B

Port Authority

CONTRACT NO. NSC-011

DWG.NO. NAR909 SHT. 77

\\192.168.25\13\PROJECTS\2062\5\Drawings\NAR909.sht #DATE# #TIME#

MATCH LINE DWG. NAR909

STRUCTURAL BOX (N.I.C.)

SMOKE EXHAUST DUCT TO RUN BEHIND SLOPING MTL. PANEL WALL REFER TO SECTIONS (N.I.C.)

PERFORATED METAL PANEL CEILING. SEE NAR920 FOR DETAILS

CONDUIT ROUTING CONTINUED ON NAR 109

CEILING MOUNTED FIRE ALARM AUDIO / VISUAL DEVICE

WALL MOUNTED CAMERA. TYP. (N.I.C.) SEE NAR407 FOR LOCATION

TUNNEL VENTILATION ACCESS ROOM 14'-0" A.F.F.

M16A

LIGHT FIXTURE. TYP.

16'-6"

OPEN TUNNEL VENTILATION DUCT ENCLOSURE

OPEN TO STREET

STAIR 'A' SHAFT

OPEN TUNNEL VENT DUCT ENCLOSURE

STAIR 'A' SHAFT

OPEN TO STREET

SLOPING MTL. PANEL WALL WITH LIGHT STRIPS. TYP

DELUGE SPRINKLER HEAD CONNECTION. TYP

DOWNLIGHT. TYP.

SPRINKLER. TYP. SEE FIRE PROTECTION DWGS FOR DETAILS

ANTENNA (NIC)

TUNNEL VENTILATION ROOM 14'-0" A.F.F.

M16B

TRANSFORMER ROOM 14'-0" A.F.F.

M17

6042+00

6043+00

6044+00

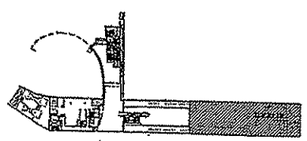

100% SUBMISSION

NO.	DATE	DESCRIPTION

REVISIONS

THE PREPARATION OF THIS DOCUMENT HAS BEEN FINANCED IN PART THROUGH A GRANT FROM THE FEDERAL TRANSIT ADMINISTRATION, U.S. DEPARTMENT OF TRANSPORTATION, UNDER THE URBAN MASS TRANSPORTATION ACT OF 1964, AS AMENDED, FOR THE PORT AUTHORITY OF ALLEGHENY COUNTY, PENNSYLVANIA.

SIGNATURE

DMJM HARRIS | AECOM

FOUR GATEWAY CENTER
20TH FLOOR
PITTSBURGH, PA 15222

APPROVED DATE

DESIGNED	JBW
DRAWN	AW, BM, CF
CHECKED	LC
IN CHARGE	CR
DATE	DEC. 21, 2007
SCALE	0' 4' 8' 16'

PORT AUTHORITY OF ALLEGHENY COUNTY
PITTSBURGH PENNSYLVANIA

NORTH SHORE CONNECTOR
NORTH SIDE STATION FINISHES
PARTIAL CONCOURSE LEVEL REFLECTED CEILING PLAN
PLAN 'C'

Port Authority

CONTRACT NO. NSC-011

DWG. NO. NAR910 SHT. 77

$DATE$ $TIME$
P:\2006025\Drawings\NAR910.dwg

NOTES:

1. CONDUITS & CABLES FROM ELEVATOR MACHINE ROOM TO ELEVATORS EL-N3 & EL-N4 BY NSC-011.

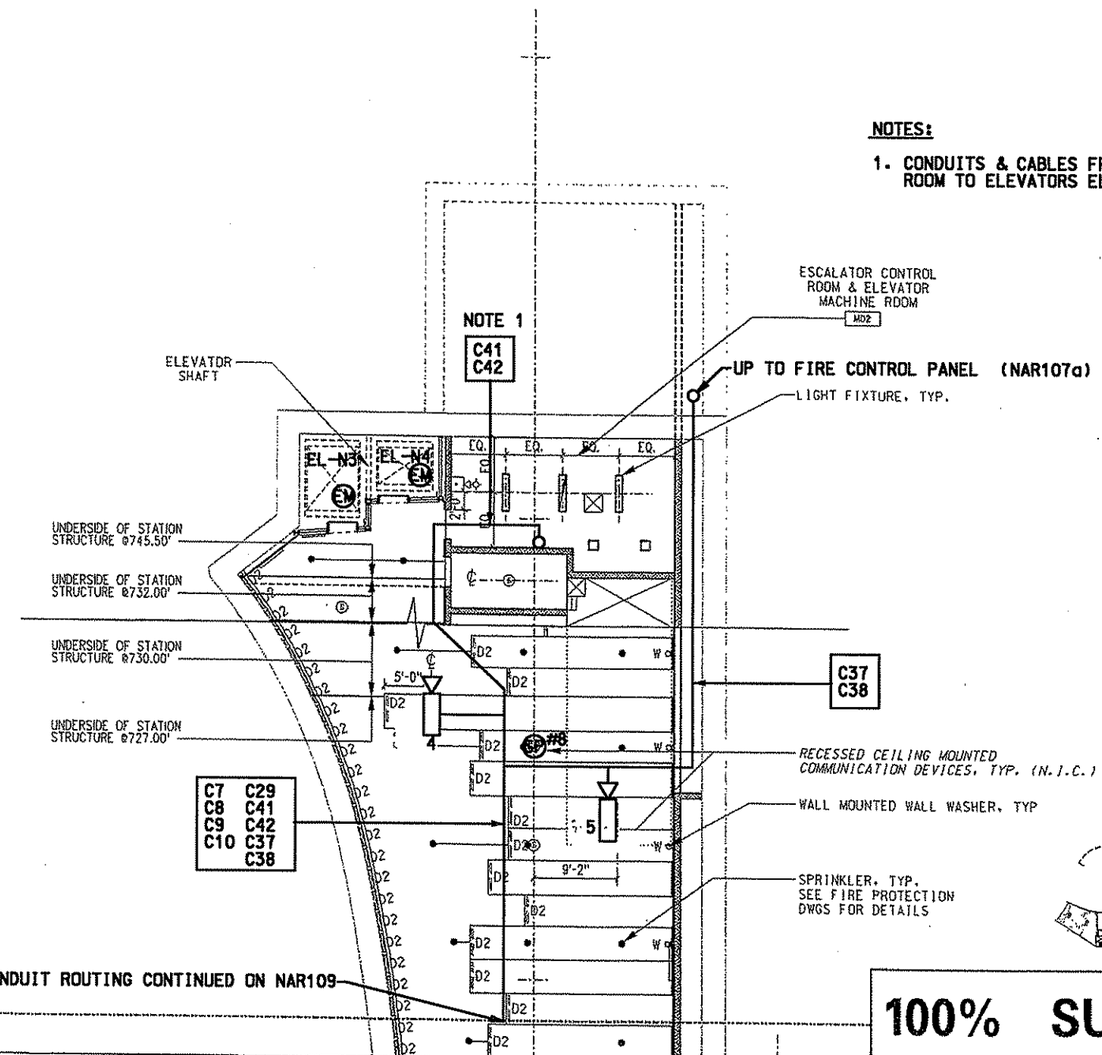

100% SUBMISSION

NO.	DATE	DESCRIPTION

REVISIONS

THE PREPARATION OF THIS DOCUMENT HAS BEEN FINANCED IN PART THROUGH A GRANT FROM THE FEDERAL TRANSIT ADMINISTRATION, U.S. DEPARTMENT OF TRANSPORTATION, UNDER THE URBAN MASS TRANSPORTATION ACT OF 1964, AS AMENDED, FOR THE PORT AUTHORITY OF ALLEGHENY COUNTY, PENNSYLVANIA.

SIGNATURE

DMJM HARRIS | AECOM
FOUR GATEWAY CENTER
20TH FLOOR
PITTSBURGH, PA 15222

APPROVED DATE

DESIGNED	JBW
DRAWN	AW, BM, CF
CHECKED	LC
IN CHARGE	CR
DATE	APR. 03, 2008
SCALE	0 4' 8' 16'

PORT AUTHORITY OF ALLEGHENY COUNTY
PITTSBURGH PENNSYLVANIA

NORTH SHORE CONNECTOR
NORTH SIDE STATION FINISHES
PARTIAL CONCOURSE LEVEL REFLECTED CEILING PLAN
PLAN D

Port Authority

CONTRACT NO. NSC-011
DWG. NO. NAR911 SHT. 77

$DATE$ $TIME$
\\192.168.25\J3\PROJECTS\20625\Drawings\NAR9M.sht

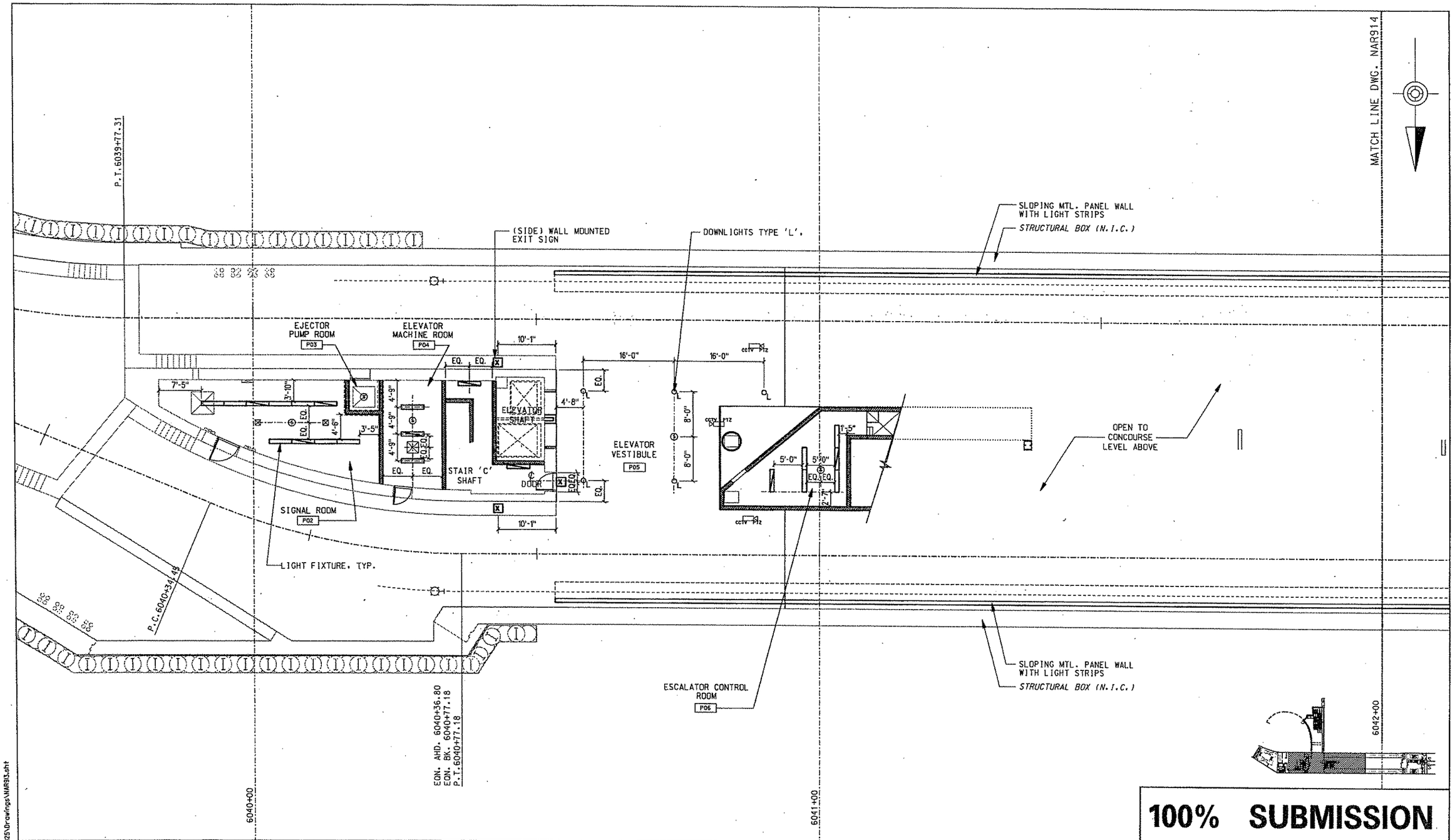

100% SUBMISSION

COOPER CARRY
80 WEST 17TH STREET
12TH FLOOR
NEW YORK, NY 10011
212-691-0271
WWW.COOPERCARRY.COM

NO.	DATE	DESCRIPTION

REVISIONS

THE PREPARATION OF THIS DOCUMENT HAS BEEN FINANCED IN PART THROUGH A GRANT FROM THE FEDERAL TRANSIT ADMINISTRATION, U.S. DEPARTMENT OF TRANSPORTATION, UNDER THE URBAN MASS TRANSPORTATION ACT OF 1964, AS AMENDED, FOR THE PORT AUTHORITY OF ALLEGHENY COUNTY, PENNSYLVANIA.

SIGNATURE

DMJM HARRIS | AECOM
FOUR GATEWAY CENTER
20TH FLOOR
PITTSBURGH, PA 15222

APPROVED DATE

DESIGNED	JBW
DRAWN	AW, BM, CF
CHECKED	LC
IN CHARGE	CR
DATE	APR. 03, 2008
SCALE	0' 4' 8' 16'

PORT AUTHORITY OF ALLEGHENY COUNTY
PITTSBURGH PENNSYLVANIA

NORTH SHORE CONNECTOR
NORTH SIDE STATION FINISHES
PARTIAL PLATFORM LEVEL REFLECTED CEILING PLAN
PLAN B

Port Authority
connecting people to life

CONTRACT NO. NSC-011
DWG. NO. NAR913 SHT. 77

@DATE@ @TIME@
\\192.168.25.13\PROJECTS\20625\Drawings\NAR913.sht

MATCH LINE DWG. NAR907

SLOPING MTL. PANEL WALL WITH LIGHT STRIPS

STRUCTURAL BOX (N.I.C.)

LIGHT FIXTURE, TYP.

OPEN TO CONCOURSE LEVEL

OPEN TO CONCOURSE LEVEL

OPEN TO CONCOURSE LEVEL

OPEN TO CONCOURSE LEVEL

℄ DOOR

STAIR 'A'

P99

3'-3"

3'-5"

4'-9"

5'-5"

STORAGE ROOM

P10

EQ.

SLOPING MTL. PANEL WALL WITH LIGHT STRIPS

STRUCTURAL BOX (N.I.C.)

(SIDE) WALL MOUNTED EXIT SIGN

EMERGENCY GENERATOR ROOM

P07

MCC ROOM

P08

ELECTRICAL ROOM

P09

6042+00

6043+00

6044+00

T.S. 6044+03.43

100% SUBMISSION

COOPER.CARRY

80 WEST 17TH STREET
12TH FLOOR
NEW YORK, NY 10011
212-691-0371
WWW.COOPERCARRY.COM

NO.	DATE	DESCRIPTION

REVISIONS

THE PREPARATION OF THIS DOCUMENT HAS BEEN FINANCED IN PART THROUGH A GRANT FROM THE FEDERAL TRANSIT ADMINISTRATION, U.S. DEPARTMENT OF TRANSPORTATION, UNDER THE URBAN MASS TRANSPORTATION ACT OF 1964, AS AMENDED, FOR THE PORT AUTHORITY OF ALLEGHENY COUNTY, PENNSYLVANIA.

SIGNATURE

DMJM HARRIS | AECOM

FOUR GATEWAY CENTER
20TH FLOOR
PITTSBURGH, PA 15222

APPROVED

DATE

DESIGNED	JBW
DRAWN	AW, BM, CF
CHECKED	LC
IN CHARGE	CR
DATE	APR. 03, 2008
SCALE	0' 4' 8' 16'

PORT AUTHORITY OF ALLEGHENY COUNTY
PITTSBURGH PENNSYLVANIA

NORTH SHORE CONNECTOR
NORTH SIDE STATION FINISHES
PARTIAL PLATFORM LEVEL REFLECTED CEILING PLAN
PLAN C

Port Authority

CONTRACT NO. NSC-011

DWG. NO. NAR914

SHT. 77

#DATE# #TIME#
\\192.168.25\U3\PROJECTS\206125\Drawings\NAR914.sht

206125\Drawings\NAR914.sht 04/10/2008 11:15:46 AM

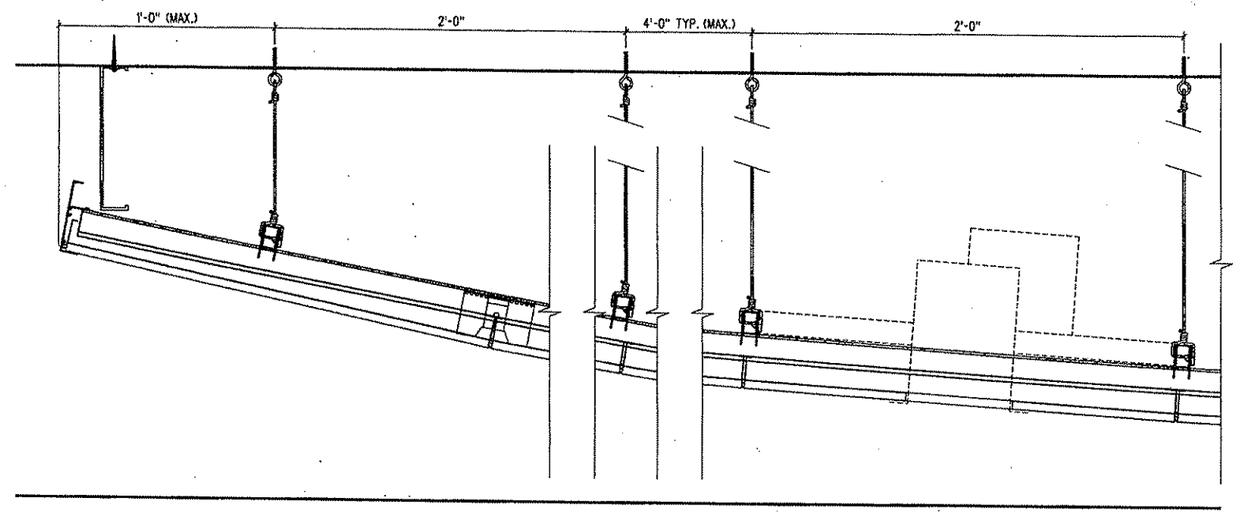

SECTION DETAIL 1 NAR200

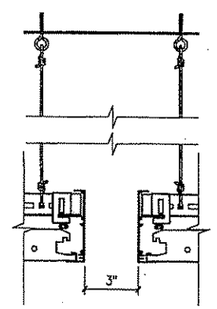

SECTION DETAIL 4 NAR200

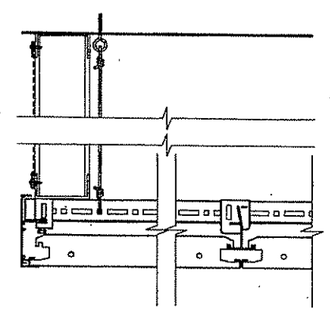

SECTION DETAIL 3 NAR200

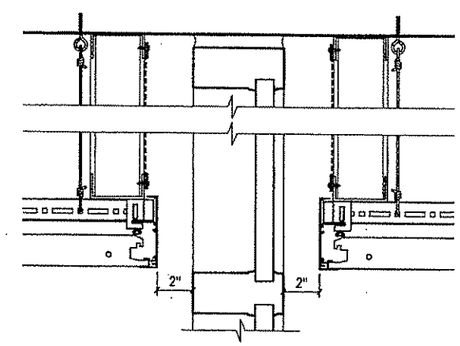

SECTION DETAIL 2 NAR200

100% SUBMISSION

COOPER CARRY
ARCHITECTS
60 WEST 17TH STREET
12TH FLOOR
NEW YORK, NY 10011
212-691-4371
WWW.COOPERCARRY.COM

NO.	DATE	DESCRIPTION

REVISIONS

THE PREPARATION OF THIS DOCUMENT HAS BEEN FINANCED IN PART THROUGH A GRANT FROM THE FEDERAL TRANSIT ADMINISTRATION, U.S. DEPARTMENT OF TRANSPORTATION, UNDER THE URBAN MASS TRANSPORTATION ACT OF 1964, AS AMENDED. FOR THE PORT AUTHORITY OF ALLEGHENY COUNTY, PENNSYLVANIA.

SIGNATURE

DMJM HARRIS | AECOM
FOUR GATEWAY CENTER
20TH FLOOR
PITTSBURGH, PA 15222

APPROVED DATE

DESIGNED	JBW
DRAWN	AW, BM, CF
CHECKED	LC
IN CHARGE	CR
DATE	APR. 03, 2008
SCALE	0' 2" 4" 8"

PORT AUTHORITY OF ALLEGHENY COUNTY
PITTSBURGH PENNSYLVANIA

NORTH SHORE CONNECTOR
NORTH SIDE STATION FINISHES
CEILING DETAILS
PERFORATED METAL SUSPENDED CEILING

Port Authority

CONTRACT NO. NSC-011
DWG. NO. NAR920 SHT. 77

@DATE@ @TIME@
\\192.168.250.3\PROJECTS\206025\Drawings\NAR920.sht

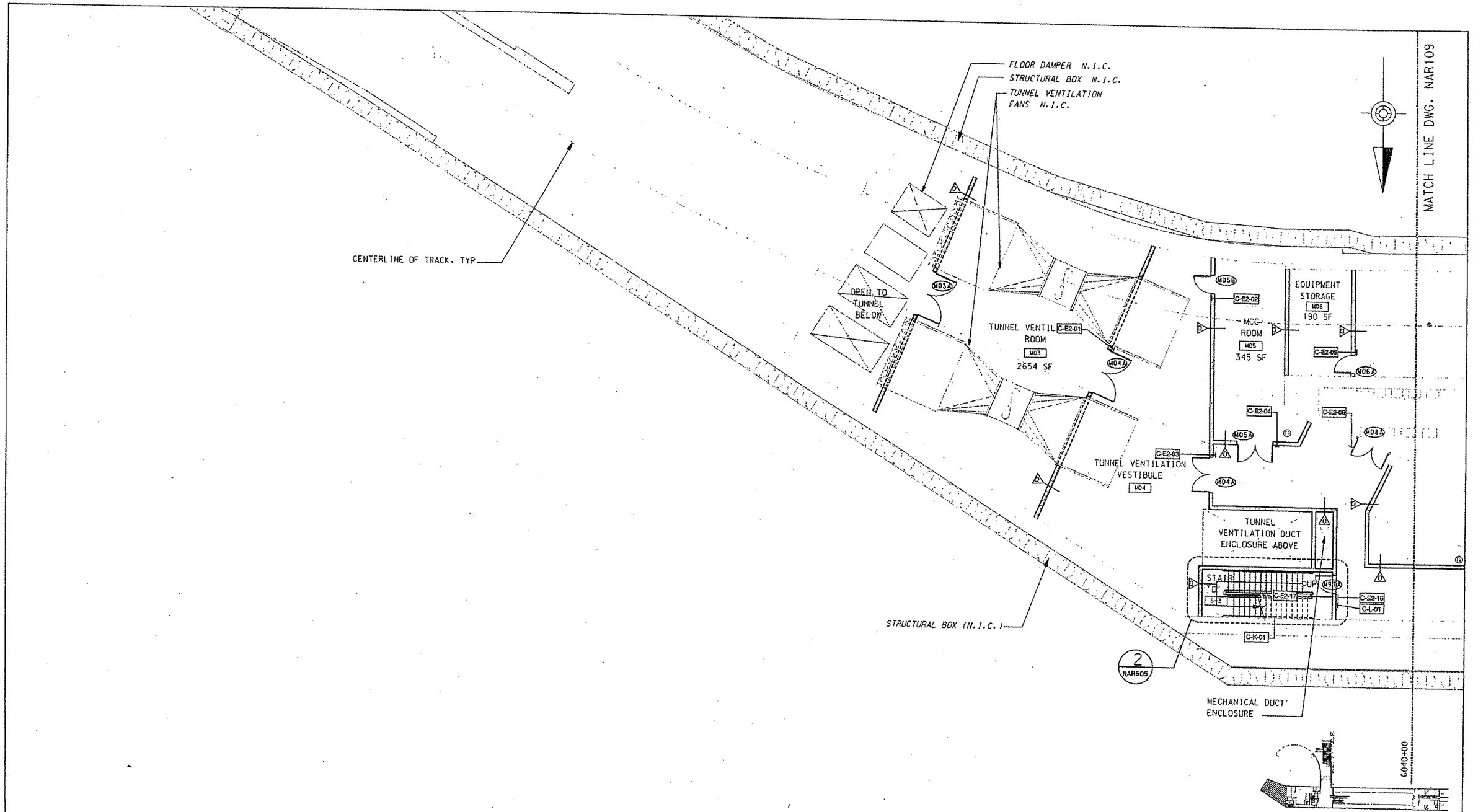

100% SUBMISSION

COOPER CARRY
50 WEST 17TH STREET
12TH FLOOR
NEW YORK, NY 10011
212-691-0271
WWW.COOPERCARRY.COM

KMA DESIGN
137 TECHNOLOGY DRIVE, SUITE 401
CANONSBURG, PA 15317
TEL 724.745.8003 FAX 724.745.8407
WWW.KMADESIGNGROUP.COM
2007 ALL RIGHTS RESERVED

NO.	DATE	DESCRIPTION

REVISIONS

THE PREPARATION OF THIS DOCUMENT HAS BEEN FINANCED IN PART THROUGH A GRANT FROM THE FEDERAL TRANSIT ADMINISTRATION, U.S. DEPARTMENT OF TRANSPORTATION, UNDER THE URBAN MASS TRANSPORTATION ACT OF 1964, AS AMENDED, FOR THE PORT AUTHORITY OF ALLEGHENY COUNTY, PENNSYLVANIA.

SIGNATURE

DMJM HARRIS | AECOM
FOUR GATEWAY CENTER
20TH FLOOR
PITTSBURGH, PA 15222

APPROVED DATE

DESIGNED	MRH
DRAWN	MRH
CHECKED	JGE
IN CHARGE	BJH
DATE	APRIL 3, 2008
SCALE	AS NOTED

0' 2' 4' 6' 8' 16

PORT AUTHORITY OF ALLEGHENY COUNTY
PITTSBURGH PENNSYLVANIA

NORTH SHORE CONNECTOR
NORTH SIDE STATION FINISHES
PARTIAL CONCOURSE LEVEL
PLAN A

Port Authority

CONTRACT NO. NSC-011
DWG. NO. NSN102
SHT. 03

$DATE$ $TIME$
$FILE$

MATCH LINE DWG. NAR111

MATCH LINE DWG. NAR108

MATCH LINE DWG. NAR110

FUTURE FARE COLLECTION

STRUCTURAL BOX (N.I.C.)

2'-0" TYP.

SLOPE TO DRAIN

CORRUGATED MTL. & CMU / STL. STUD WALL

GLASS WALL

CUSTODIAL / TRASH ROOM
M07
1014 SF

PAAC POLICE
M14
190 SF

STAIR 'C'

COMMUNICATIONS ROOM
M08
570 SF

SUPPORT
M09
19

CONCOURSE LEVEL @
EL.709.00'

MECHANICAL ROOM
M10
330 SF

WOMEN

MEN

VENDOR OPTICS
M15
70 SF

CORRIDOR
M13

FL.D

STAIR 'B'

OPEN TO PLATFORM BELOW @ EL +/- 694.00'

IN GROUND LIGHT STRIP, TYP

IN GROUND UPLIGHT, TYP

CAST-IN PLACE CONCRETE WALL

STAINLESS STEEL PARTIAL HEIGHT WALL

3" COLORED CONCRETE TOPPING REFER TO NAR200

CENTERLINE OF TRACK, TYP

PLATFORM BELOW

STRUCTURAL BOX (N.I.C.)

SLOPING SS MTL. PANEL WALL WITH LIGHT STRIPS, TYP.

6040+00

6041+00

6042+00

100% SUBMISSION

COOPER CARRY
50 WEST 17TH STREET
12TH FLOOR
NEW YORK, NY 10011
212-691-0231
WWW.COOPERCARRY.COM

KMA DESIGN
120 TECHNOLOGY DRIVE, SUITE 401
CANONSBURG, PA 15317
TEL 724.743.8001 FAX 724.743.8027
WWW.THEKMAGROUP.COM
2007 ALL RIGHTS RESERVED

NO.	DATE	DESCRIPTION

REVISIONS

THE PREPARATION OF THIS DOCUMENT HAS BEEN FINANCED IN PART THROUGH A GRANT FROM THE FEDERAL TRANSIT ADMINISTRATION, U.S. DEPARTMENT OF TRANSPORTATION, UNDER THE URBAN MASS TRANSPORTATION ACT OF 1964, AS AMENDED, FOR THE PORT AUTHORITY OF ALLEGHENY COUNTY, PENNSYLVANIA.

SIGNATURE

DMJM HARRIS | AECOM
FOUR GATEWAY CENTER
20TH FLOOR
PITTSBURGH, PA 15222

APPROVED DATE

DESIGNED	HRH
DRAWN	HRH
CHECKED	JGE
IN CHARGE	BJH
DATE	APRIL 3, 2008
SCALE	0' 2' 4' 6' 8' 16'

PORT AUTHORITY OF ALLEGHENY COUNTY
PITTSBURGH PENNSYLVANIA

NORTH SHORE CONNECTOR
NORTH SIDE STATION FINISHES
PARTIAL CONCOURSE LEVEL
PLAN B

Port Authority

CONTRACT NO. NSC-011

DWG. NO. NSN103

SHT. 04

$DATE$ $TIME$
$FILE$

MATCH LINE DWG. NAR109

SLOPING MTL. PANEL WALL WITH LIGHT STRIPS

SMOKE EXHAUST DUCT TO RUN BEHIND SLOPING MTL. PANEL WALL REFER TO SECTIONS (N.I.C.)

DAMPER IN WALL, TYP (N.I.C.)

STRUCTURAL BOX (N.I.C.)

FLOOR DAMPER, TYP. (N.I.C.)

TUNNEL VENTILATION FAN, TYP (N.I.C.)

STRUCTURAL BOX (N.I.C.)

SLAB OPENING ABOVE (N.I.C.)

FL.D.

TUNNEL VENTILATION ACCESS ROOM M16A

STAIR 'A' S-1

TUNNEL VENTILATION ROOM M16B

M16A M16B M16C M17A

C-E2-21 C-E2-23 C-E2-24 C-E2-13 C-E2-22

TRANSFORMER ROOM M17 917 SF FL.D.

4" HIGH CURB @ DOOR

OPEN TO PLATFORM BELOW @ +/- EL 694.00'

8'-5" X 8'-8" ACCESS PANEL

MASONRY WALL WITH PREFINISHED ALUM. LOUVERS

8'-8" X 8'-8" DAMPER (N.I.C.)

2 NAR600

2 NAR525

FL.D.

SLAB OPENING ABOVE (N.I.C.)

LINE OF STAIR 'A' ABOVE

CENTERLINE OF TRACK, TYP

SMOKE EXHAUST DUCT TO RUN BEHIND SLOPING MTL. PANEL WALL REFER TO SECTIONS (N.I.C.)

STRUCTURAL BOX (N.I.C.)

SLOPING MTL. PANEL WALL WITH LIGHT STRIPS

6042+00

6043+00

6044+00

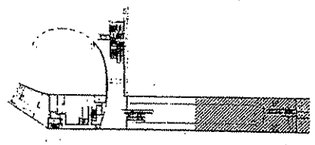

100% SUBMISSION

COOPER CARRY
50 WEST 37TH STREET
12TH FLOOR
NEW YORK, NY 10011
212-921-0271
WWW.COOPERCARRY.COM

KMA DESIGN
130 TECHNOLOGY DRIVE, SUITE 403
CANONSBURG, PA 15317
TEL 724.745.8001 FAX 724.745.8007
WWW.THEKMAGROUP.COM
2007 ALL RIGHTS RESERVED

NO.	DATE	DESCRIPTION

REVISIONS

THE PREPARATION OF THIS DOCUMENT HAS BEEN FINANCED IN PART THROUGH A GRANT FROM THE FEDERAL TRANSIT ADMINISTRATION, U.S. DEPARTMENT OF TRANSPORTATION, UNDER THE URBAN MASS TRANSPORTATION ACT OF 1964, AS AMENDED, FOR THE PORT AUTHORITY OF ALLEGHENY COUNTY, PENNSYLVANIA.

SIGNATURE

DMJM HARRIS | AECOM
FOUR GATEWAY CENTER
20TH FLOOR
PITTSBURGH, PA 15222

APPROVED DATE

DESIGNED	MRM
DRAWN	MRM
CHECKED	JGE
IN CHARGE	BJH
DATE	APRIL 3, 2008
SCALE	AS NOTED

0' 2' 4' 6' 8' 16'

PORT AUTHORITY OF ALLEGHENY COUNTY
PITTSBURGH PENNSYLVANIA

NORTH SHORE CONNECTOR
NORTH SIDE STATION FINISHES
PARTIAL CONCOURSE LEVEL
PLAN C

Port Authority

CONTRACT NO. NSC-011

DWG. NO. NSN104 SHT. 05

$TIME$
$DATE$
$FILE$

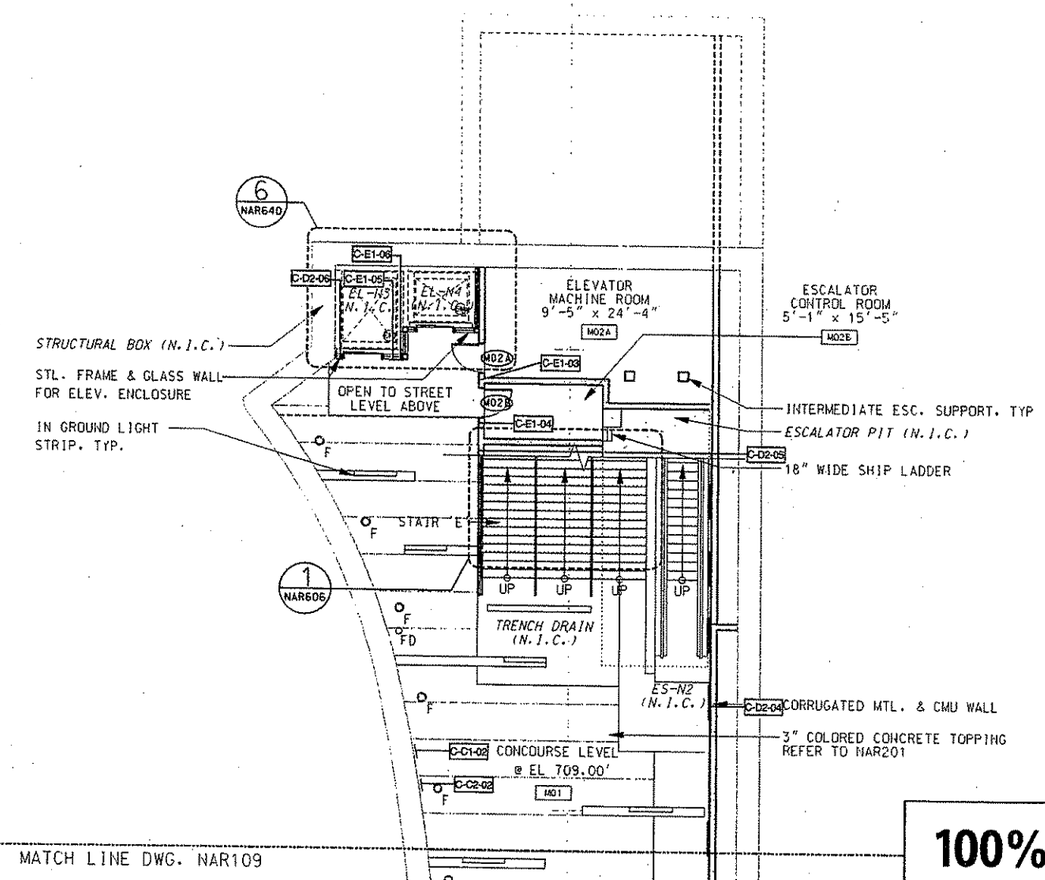

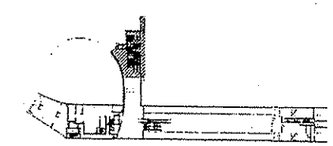

MATCH LINE DWG. NAR109

100% SUBMISSION

COOPER CARRY
50 WEST 17TH STREET
12TH FLOOR
NEW YORK, NY 10011
212-691-0271
WWW.COOPERCARRY.COM

KMA DESIGN
135 TECHNOLOGY DRIVE, SUITE 401
CANONSBURG, PA 15317
TEL 724.745.8601 FAX 724.745.8607
WWW.THEKMAGROUP.COM
2007 ALL RIGHTS RESERVED

NO.	DATE	DESCRIPTION

REVISIONS

THE PREPARATION OF THIS DOCUMENT HAS BEEN FINANCED IN PART THROUGH A GRANT FROM THE FEDERAL TRANSIT ADMINISTRATION, U.S. DEPARTMENT OF TRANSPORTATION, UNDER THE URBAN MASS TRANSPORTATION ACT OF 1964, AS AMENDED. FOR THE PORT AUTHORITY OF ALLEGHENY COUNTY, PENNSYLVANIA.

SIGNATURE

DMJM HARRIS | AECOM
FOUR GATEWAY CENTER
20TH FLOOR
PITTSBURGH, PA 15222

APPROVED DATE

DESIGNED	MRM
DRAWN	MRM
CHECKED	JGE
IN CHARGE	BJM
DATE	APRIL 3, 2008
SCALE	0' 2' 4' 6' 8' 16'

PORT AUTHORITY OF ALLEGHENY COUNTY
PITTSBURGH PENNSYLVANIA

NORTH SHORE CONNECTOR
NORTH SIDE STATION FINISHES
PARTIAL CONCOURSE LEVEL
PLAN D

Port Authority

CONTRACT NO. NSC-011

DWG. NO. NSN105 SHT. 06

$DATE$ $TIME$
$FILE$

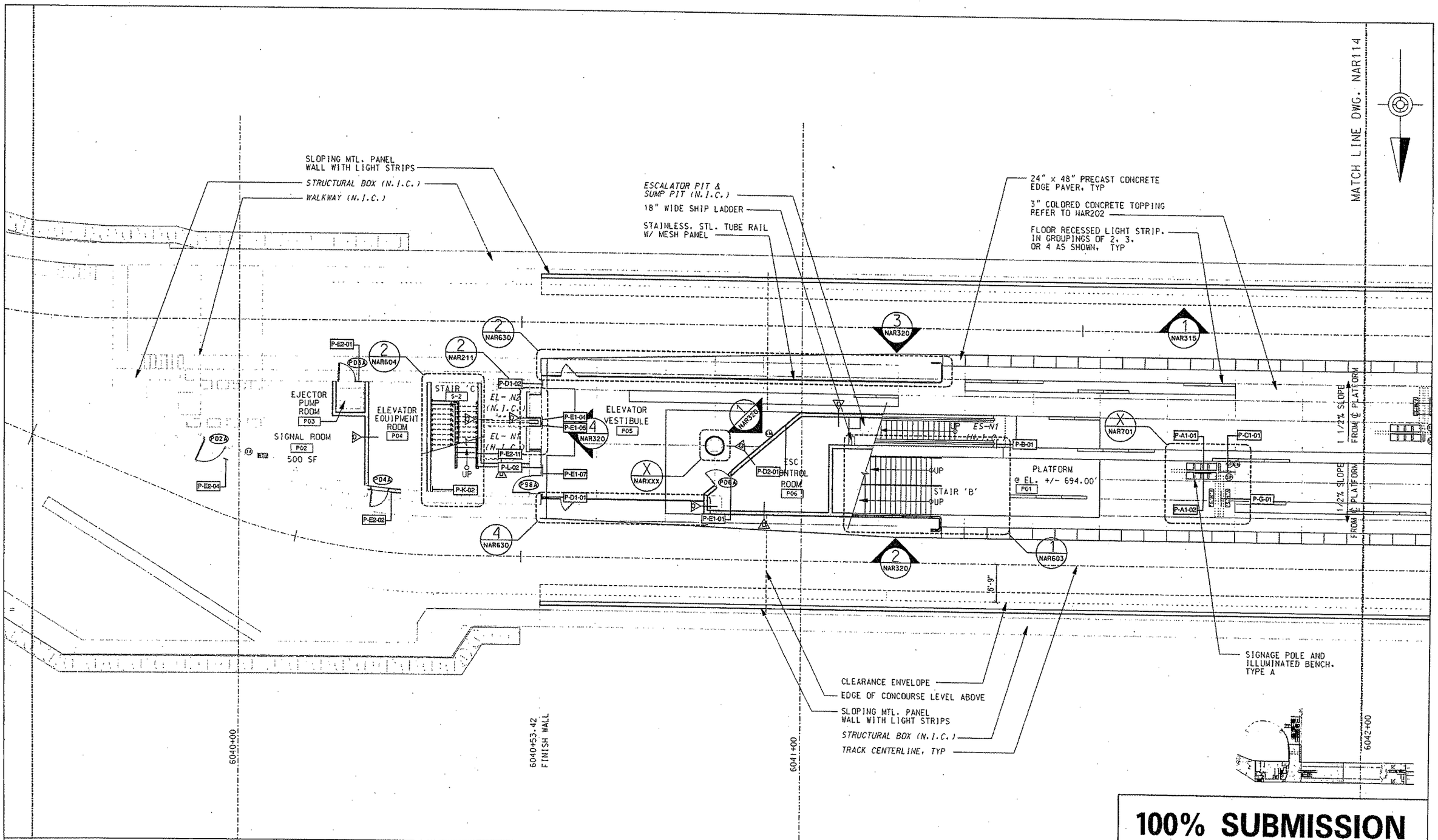

100% SUBMISSION

COOPER CARRY
20 WEST 17TH STREET
12TH FLOOR
NEW YORK, NY 10011
212-851-0271
WWW.COOPERCARRY.COM

KMA DESIGN
1351 TECHNOLOGY DRIVE, SUITE 401
CANONSBURG, PA 15317
TEL 724.745.8851 FAX 724.745.8607
WWW.THEKMACARD.WEBCOM
2007 ALL RIGHTS RESERVED

NO.	DATE	DESCRIPTION

REVISIONS

THE PREPARATION OF THIS DOCUMENT HAS BEEN FINANCED IN PART THROUGH A GRANT FROM THE FEDERAL TRANSIT ADMINISTRATION, U.S. DEPARTMENT OF TRANSPORTATION, UNDER THE URBAN MASS TRANSPORTATION ACT OF 1964, AS AMENDED, FOR THE PORT AUTHORITY OF ALLEGHENY COUNTY, PENNSYLVANIA.

SIGNATURE

DMJM HARRIS | AECOM
FOUR GATEWAY CENTER
20TH FLOOR
PITTSBURGH, PA 15222

APPROVED DATE

DESIGNED	MRH
DRAWN	MRH
CHECKED	JGE
IN CHARGE	BJH
DATE	APRIL 3, 2008
SCALE	0' 2' 4' 6' 8' 16'

PORT AUTHORITY OF ALLEGHENY COUNTY
PITTSBURGH PENNSYLVANIA

NORTH SHORE CONNECTOR
NORTH SIDE STATION FINISHES
PARTIAL PLATFORM LEVEL
PLAN B

Port Authority

CONTRACT NO. NSC-011

DWG. NO. NSN106

SHT. 07

$DATE$ $TIME$
$FILE$

MATCH LINE DWG. NAR113

SIGNAGE POLE, & ILLUMINATED BENCH, TYPE A

SLOPING MTL. PANEL WALL WITH LIGHT STRIPS

CLEARANCE ENVELOPE

TRACK CENTERLINE, TYP

STRUCTURAL BOX (N.I.C.)

ITH PREFINISHED ALUM. LOUVERS

SLAB OPENING ABOVE (N.I.C.)

EMBEDDED CONDUIT (NIC)

METAL STAIR (NIC)

6'-9"

1 NAR315

1 NAR600

P-A1-03 P-G-02 P-A1-04 P-C2-01 P-A1-05 P-A1-06 P-A1-07 P-D1-03 P-E1-02 P-L-01 P-D2-02 P-D1-04 P-E1-03 P-E2-05 P-E2-06 P-E2-07 P-E2-08 P-E2-09 P-E2-10 P-K-01

1 1/2% SLOPE

1/2% SLOPE

2 NAR701 PLATFORM LEVEL P01

PLATFORM ELEV. 594.00'

1 NAR701

3 NAR525

STAIR 'A' S-1 UP

FL.D.

AREA OF REFUGE

EMERGENCY GENERATOR P07 200 SF

MCC ROOM P08 340 SF

ELECTRICAL ROOM P09 1165 SF

STORAGE ROOM P10

P07A P08A P08B P09A P09B P10A RTU

SIGNAGE POLE, & ILLUMINATED BENCH, TYPE B

FLOOR RECESSED LIGHT STRIP, IN GROUPINGS OF 2, 3, OR 4 AS SHOWN, TYP

3" COLORED CONCRETE TOPPING REFER TO NAR203

PLATFORM EDGE

SLAB OPENING ABOVE (N.I.C.)

CONCRETE WALKWAY (N.I.C.)

STRUCTURAL WALL (N.I.C.)

STAIR ABOVE

6042+00

6043+00

6043+17.54 FINISH WALL

6044+00

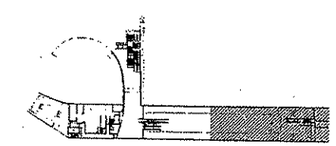

100% SUBMISSION

COOPER CARRY
50 WEST 17TH STREET
12TH FLOOR
NEW YORK, NY 10011
212-691-0271
WWW.COOPERCARRY.COM

KMA DESIGN
131 FITZHUGH DRIVE, SUITE 401
CANONSBURG, PA 15317
TEL: 724.746.8601 FAX: 724.746.8602
WWW.KMADESIGNGROUP.COM
2007 ALL RIGHTS RESERVED

NO.	DATE	DESCRIPTION

REVISIONS

THE PREPARATION OF THIS DOCUMENT HAS BEEN FINANCED IN PART THROUGH A GRANT FROM THE FEDERAL TRANSIT ADMINISTRATION, U.S. DEPARTMENT OF TRANSPORTATION, UNDER THE URBAN MASS TRANSPORTATION ACT OF 1964, AS AMENDED, FOR THE PORT AUTHORITY OF ALLEGHENY COUNTY, PENNSYLVANIA.

SIGNATURE

DMJM HARRIS | AECOM
FOUR GATEWAY CENTER
20TH FLOOR
PITTSBURGH, PA 15222

APPROVED DATE

DESIGNED	MRH
DRAWN	MRH
CHECKED	JGE
IN CHARGE	BJH
DATE	APRIL 3, 2008
SCALE	0' 2' 4' 6' 8' 16

PORT AUTHORITY OF ALLEGHENY COUNTY
PITTSBURGH PENNSYLVANIA

NORTH SHORE CONNECTOR
NORTH SIDE STATION FINISHES
PARTIAL PLATFORM LEVEL
PLAN C

Port Authority

CONTRACT NO. NSC-011

DWG. NO. NSN107 SHT. 08

$TIME$
$DATE$
$FILE$

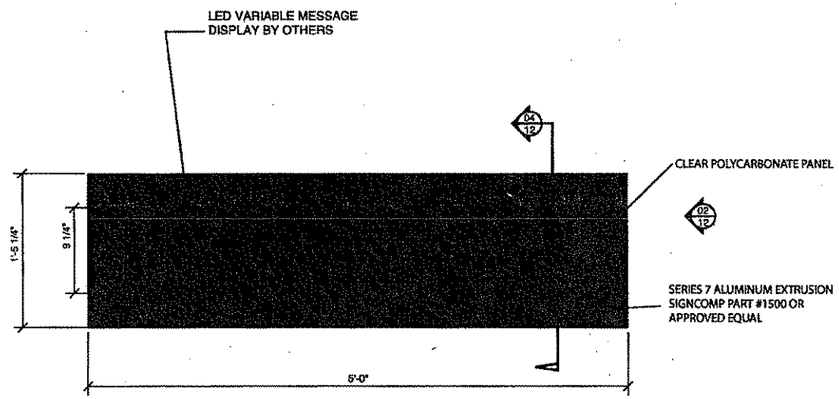

1 VARIABLE MESSAGE SIGN (SIGN TYPE G) (HOUSING ONLY)
ELEVATION
SCALE: 1 1/2" = 1' - 0"

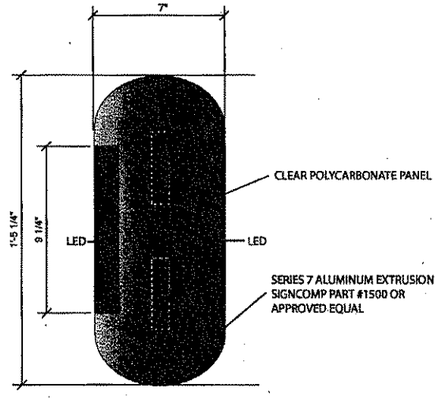

2 VARIABLE MESSAGE SIGN (SIGN TYPE G) (HOUSING ONLY)
END VIEW
SCALE: 1/4" = 1"

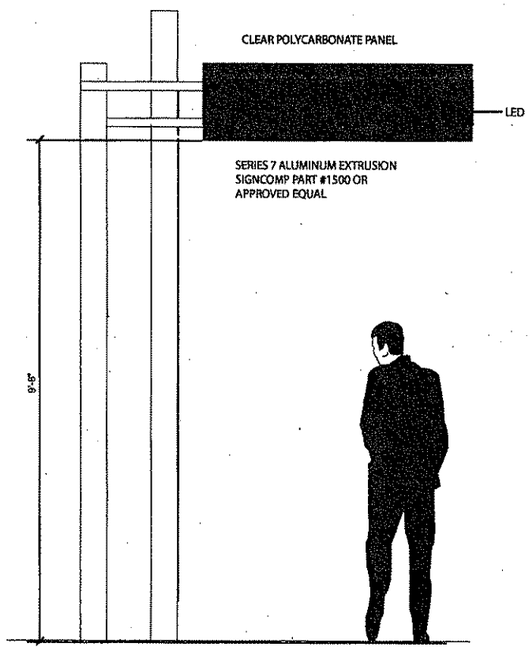

3 VARIABLE MESSAGE SIGN (SIGN TYPE G) (HOUSING ONLY)
ELEVATION
SCALE: 3/4" = 1' - 0"

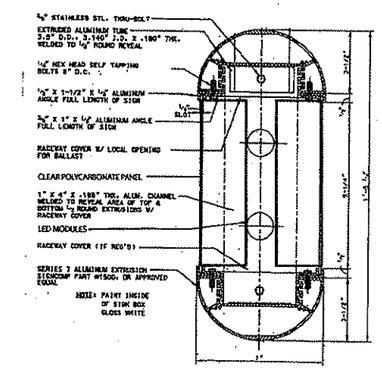

4 VARIABLE MESSAGE SIGN (SIGN TYPE G) (HOUSING ONLY)
ELEVATION
SCALE: 3/4" = 1' - 0"

100% SUBMISSION

COOPER CARRY
60 WEST 17TH STREET
12TH FLOOR
NEW YORK, NY 10011
212-691-0271
WWW.COOPERCARRY.COM

KMA DESIGN
135 TECHNOLOGY DRIVE, SUITE 401
CANONSBURG, PA 15317
TEL 724.745.0511 FAX 724.745.0517
WWW.THEKMAGROUP.COM
2007 ALL RIGHTS RESERVED

NO.	DATE	DESCRIPTION

REVISIONS

THE PREPARATION OF THIS DOCUMENT HAS BEEN FINANCED IN PART THROUGH A GRANT FROM THE FEDERAL TRANSIT ADMINISTRATION, U.S. DEPARTMENT OF TRANSPORTATION, UNDER THE URBAN MASS TRANSPORTATION ACT OF 1964, AS AMENDED, FOR THE PORT AUTHORITY OF ALLEGHENY COUNTY, PENNSYLVANIA.

SIGNATURE

DMJM HARRIS | AECOM
FOUR GATEWAY CENTER
20TH FLOOR
PITTSBURGH, PA 15222

APPROVED DATE

DESIGNED	MRM
DRAWN	MRM
CHECKED	JGE
IN CHARGE	BJH
DATE	APRIL 3, 2008
SCALE	AS NOTED

PORT AUTHORITY OF ALLEGHENY COUNTY
PITTSBURGH PENNSYLVANIA

NORTH SHORE CONNECTOR
NORTH SIDE STATION FINISHES
(SIGN TYPE G)

Port Authority

CONTRACT NO. NSC-011
DWG. NO. NSN701
SHT. 12

$DATE$ $TIME$
$FILE$

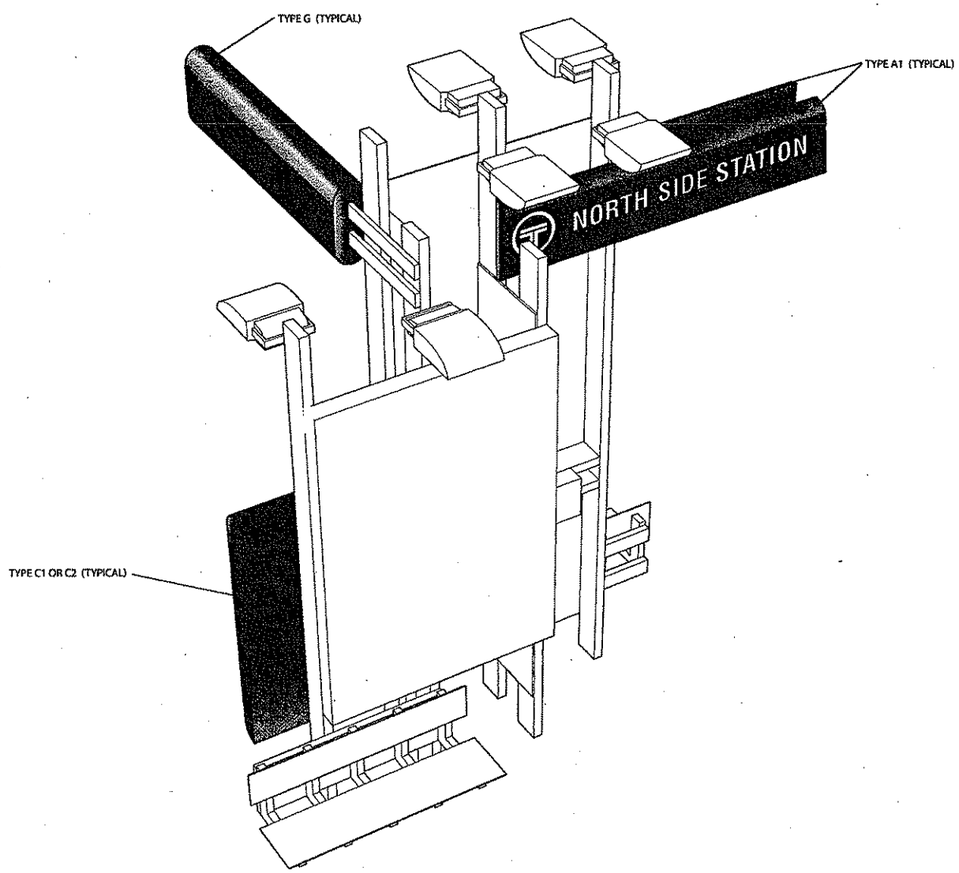

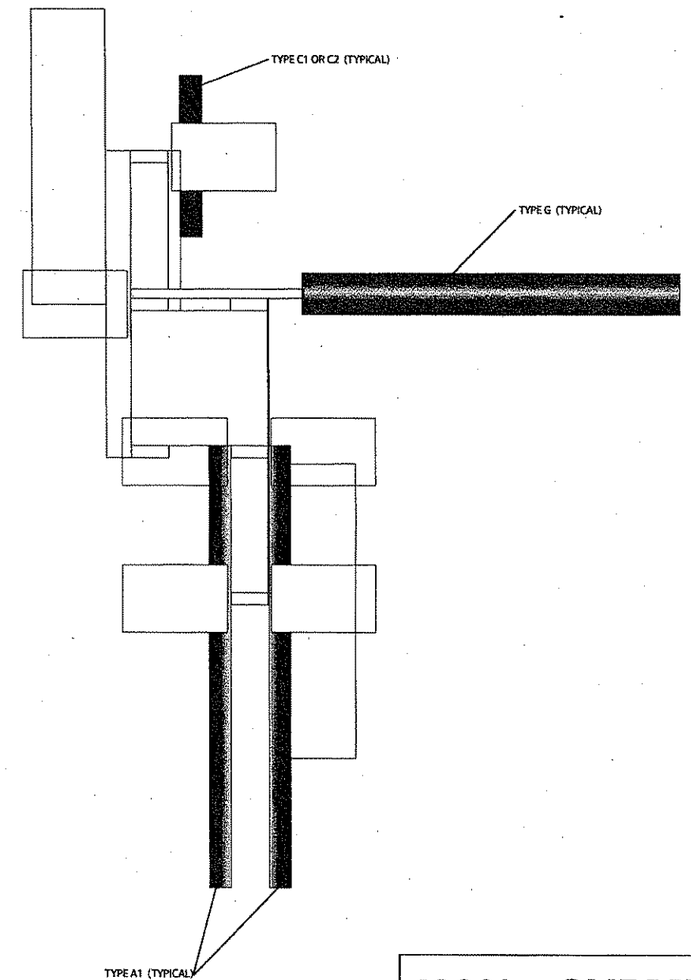

100% SUBMISSION

COOPER CARRY
80 WEST 37TH STREET
12TH FLOOR
NEW YORK, NY 10011
212-691-0271
WWW.COOPERCARRY.COM

NO.	DATE	DESCRIPTION

REVISIONS

THE PREPARATION OF THIS DOCUMENT HAS BEEN FINANCED IN PART THROUGH A GRANT FROM THE FEDERAL TRANSIT ADMINISTRATION, U.S. DEPARTMENT OF TRANSPORTATION, UNDER THE URBAN MASS TRANSPORTATION ACT OF 1964, AS AMENDED, FOR THE PORT AUTHORITY OF ALLEGHENY COUNTY, PENNSYLVANIA.

SIGNATURE

DMJM HARRIS | AECOM
FOUR GATEWAY CENTER
20TH FLOOR
PITTSBURGH, PA 15222

APPROVED DATE

DESIGNED	JBW
DRAWN	AW, BM, CF
CHECKED	LC
IN CHARGE	CR
DATE	APRIL 3, 2008
SCALE	0 1' 2' 4'

PORT AUTHORITY OF ALLEGHENY COUNTY
PITTSBURGH PENNSYLVANIA

NORTH SHORE CONNECTOR
NORTH SIDE STATION FINISHES
PLATFORM SIGNAGE POLE
PLANS AND ELEVATIONS

Port Authority

CONTRACT NO. NSC-011
DWG. NO. NAR702 SHT. 12.1

$TIME$
$DATE$
$FILE$

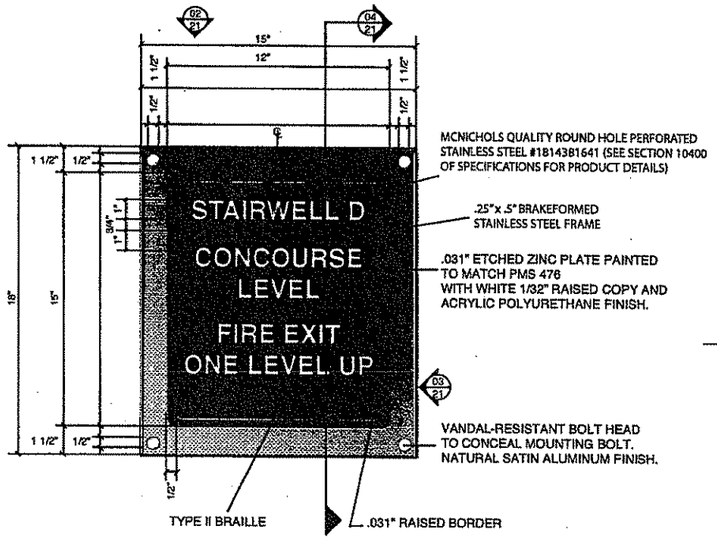

1 BRAILLE/TACTILE - PUBLIC (SIGN TYPE E1)
ELEVATION
SCALE: 1/4" = 1"

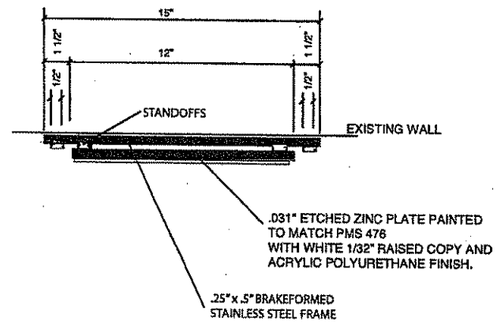

2 BRAILLE/TACTILE - PUBLIC (SIGN TYPE E1)
PLAN VIEW
SCALE: 1/4" = 1"

TYPICAL

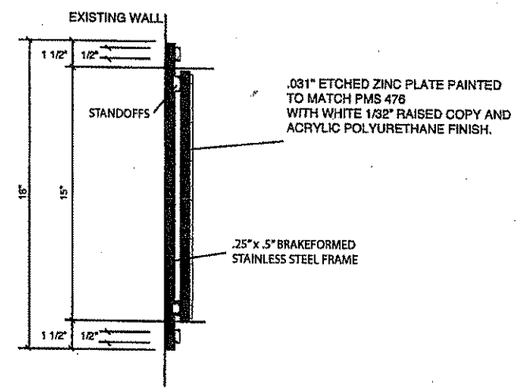

3 BRAILLE/TACTILE - PUBLIC (SIGN TYPE E1)
END VIEW
SCALE: 1/4" = 1"

TYPICAL

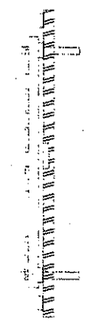

4 BRAILLE/TACTILE - PUBLIC (SIGN TYPE E1)
VERTICAL SECTION
SCALE: 1/4" = 1"

TYPICAL

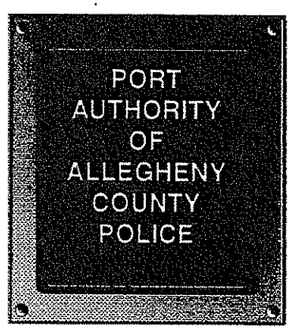

5 BRAILLE/TACTILE - PUBLIC (SIGN TYPE E1)
ELEVATION
SCALE: 1/4" = 1"

TYPICAL

6 BRAILLE/TACTILE - PUBLIC (SIGN TYPE E1)
ELEVATION
SCALE: 1/4" = 1"

TYPICAL

7 BRAILLE/TACTILE - PUBLIC (SIGN TYPE E1)
ELEVATION
SCALE: 1/4" = 1"

TYPICAL

8 BRAILLE/TACTILE - PUBLIC (SIGN TYPE E1)
ELEVATION
SCALE: 1/4" = 1"

100% SUBMISSION

COOPER CARRY
50 WEST 17TH STREET
12TH FLOOR
NEW YORK, NY 10011
212-691-0277
WWW.COOPERCARRY.COM

KMA DESIGN
132 TECHNOLOGY DRIVE, SUITE 401
CANONSBURG, PA 15317
TEL 724.745.8600 FAX 724.745.8607
WWW.THEKMAGROUP.COM
2007 ALL RIGHTS RESERVED

NO.	DATE	DESCRIPTION

REVISIONS

THE PREPARATION OF THIS DOCUMENT HAS BEEN FINANCED IN PART THROUGH A GRANT FROM THE FEDERAL TRANSIT ADMINISTRATION, U.S. DEPARTMENT OF TRANSPORTATION, UNDER THE URBAN MASS TRANSPORTATION ACT OF 1964, AS AMENDED, FOR THE PORT AUTHORITY OF ALLEGHENY COUNTY, PENNSYLVANIA.

SIGNATURE

DMJM HARRIS | AECOM
FOUR GATEWAY CENTER
20TH FLOOR
PITTSBURGH, PA 15222

APPROVED DATE

DESIGNED	MRH
DRAWN	MRH
CHECKED	JGE
IN CHARGE	BJH
DATE	APRIL 3, 2008
SCALE	AS NOTED

PORT AUTHORITY OF ALLEGHENY COUNTY
PITTSBURGH PENNSYLVANIA

NORTH SHORE CONNECTOR
NORTH SIDE STATION FINISHES
(SIGN TYPE E1)

Port Authority

CONTRACT NO. NSC-011
DWG. NO. NSN711
SHT. 21

$DATE$ $TIME$
$FILE$

NOTE:
1. ALL LIGHTING SHALL BE CIRCUITED TO 277/480V PANELBOARD HP-1 U.O.N.
2. REFER TO NEL 400 FOR LIGHT FIXTURE SCHEDULE.
3. SEE DWG SERIES NGN FOR SYMBOLS AND ABBREVIATIONS.
4. SEE DWG SERIES NEL 500 FOR PANEL SCHEDULES.
5. COORDINATE EXACT LOCATIONS OF ILLUMINATED SIGNS FOR AREA OF REFUGE WITH ARCHITECTURAL AND SIGNAGE PLANS.

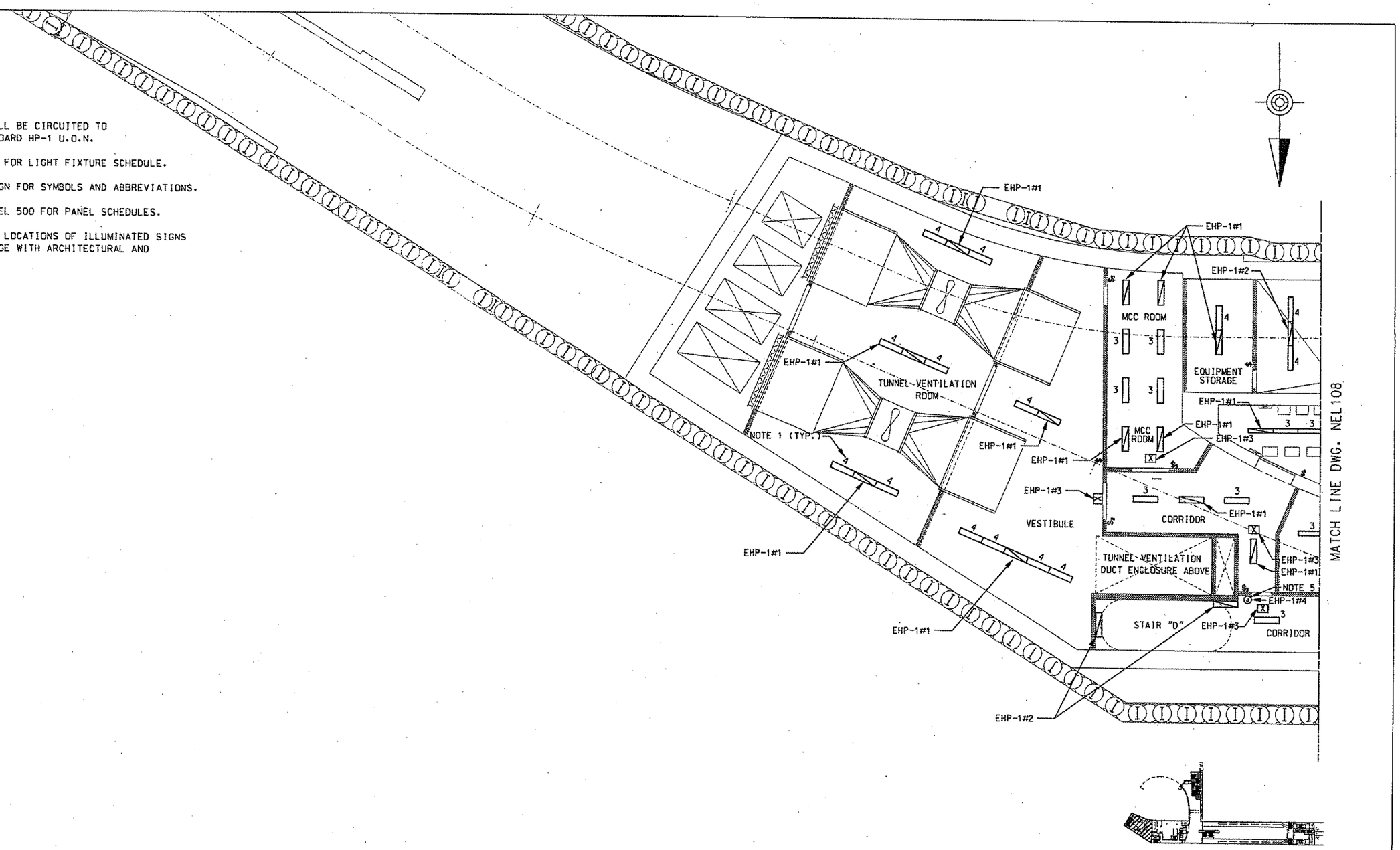

100% SUBMISSION

COOPER CARRY
59 WEST 17TH STREET
12TH FLOOR
NEW YORK, NY 10011
212-691-8271
WWW.COOPERCARRY.COM

NO.	DATE	DESCRIPTION

REVISIONS

THE PREPARATION OF THIS DOCUMENT HAS BEEN FINANCED IN PART THROUGH A GRANT FROM THE FEDERAL TRANSIT ADMINISTRATION, U.S. DEPARTMENT OF TRANSPORTATION, UNDER THE URBAN MASS TRANSPORTATION ACT OF 1964, AS AMENDED. FOR THE PORT AUTHORITY OF ALLEGHENY COUNTY, PENNSYLVANIA.

SIGNATURE

DMJM HARRIS | AECOM
FOUR GATEWAY CENTER
20TH FLOOR
PITTSBURGH, PA 15222

APPROVED DATE

DESIGNED	S.J.
DRAWN	I.C.
CHECKED	A.C.
IN CHARGE	H.S.
DATE	APRIL 3, 2008
SCALE	0' 8' 16'

PORT AUTHORITY OF ALLEGHENY COUNTY
PITTSBURGH PENNSYLVANIA

NORTH SHORE CONNECTOR
NORTH SIDE STATION FINISHES
PARTIAL CONCOURSE LEVEL
LIGHTING PLAN A

Port Authority

CONTRACT NO. NSC-011
DWG. NO. NEL107 SHT.

$DATE$ $TIME$
$FILE$

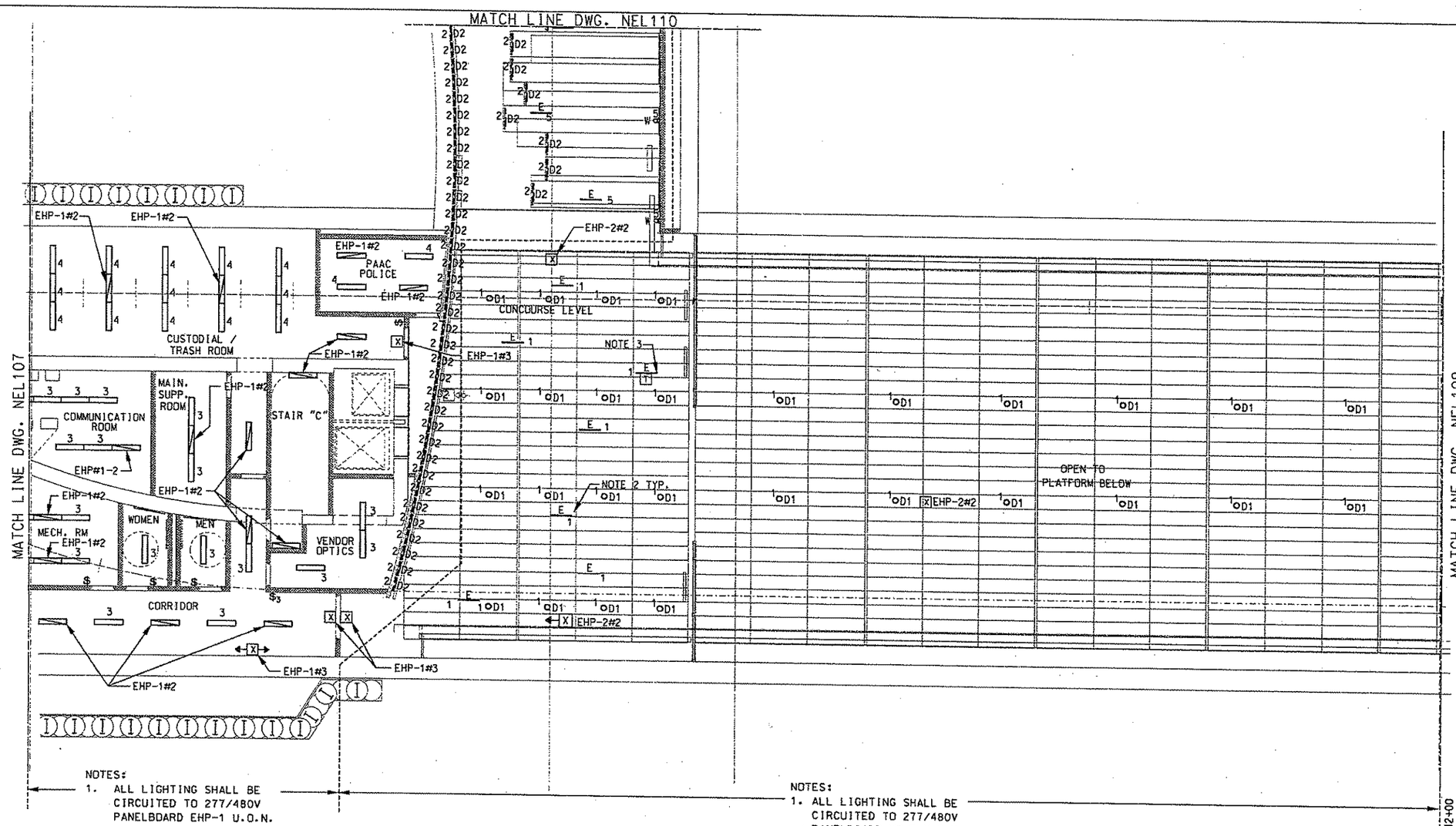

NOTES:

1. ALL LIGHTING SHALL BE CIRCUITED TO 277/480V PANELBOARD EHP-1 U.O.N.
2. TYPE "E" FIXTURES TO BE MOUNTED IN FLOOR.
3. REFER TO NEL 400 FOR LIGHT FIXTURE SCHEDULE.
4. SEE DWG SERIES NGN FOR SYMBOLS AND ABBREVIATIONS.
5. SEE DWG SERIES NEL 500 FOR PANEL SCHEDULES.

NOTES:

1. ALL LIGHTING SHALL BE CIRCUITED TO 277/480V PANELBOARD HP-2 U.O.N. AND BE CONTROLLED VIA THE CIRCUIT BREAKERS AT THE PANEL.
2. TYPE "E" FIXTURES TO BE MOUNTED IN FLOOR.
3. PROVIDE TRANSFORMER, BELOW PLATFORM SLAB FOR TYPE "E" FIXTURES.

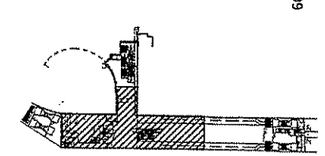

100% SUBMISSION

COOPER CARRY
50 WEST 17TH STREET
12TH FLOOR
NEW YORK, NY 10011
212-691-8271
WWW.COOPERCARRY.COM

NO.	DATE	DESCRIPTION

REVISIONS

THE PREPARATION OF THIS DOCUMENT HAS BEEN FINANCED IN PART THROUGH A GRANT FROM THE FEDERAL TRANSIT ADMINISTRATION, U.S. DEPARTMENT OF TRANSPORTATION, UNDER THE URBAN MASS TRANSPORTATION ACT OF 1964, AS AMENDED, FOR THE PORT AUTHORITY OF ALLEGHENY COUNTY, PENNSYLVANIA.

SIGNATURE

DMJM HARRIS | AECOM
FOUR GATEWAY CENTER
20TH FLOOR
PITTSBURGH, PA 15222

APPROVED DATE

DESIGNED	S.J.
DRAWN	I.C.
CHECKED	A.C.
IN CHARGE	H.S.
DATE	APRIL 3, 2008
SCALE	0' 8' 16'

PORT AUTHORITY OF ALLEGHENY COUNTY
PITTSBURGH PENNSYLVANIA

NORTH SHORE CONNECTOR
NORTH SIDE STATION FINISHES
PARTIAL CONCOURSE LEVEL
LIGHTING PLAN B

Port Authority

CONTRACT NO. NSC-011
DWG. NO. NEL108
SHT.

NOTE:

1. ALL LIGHTING SHALL BE CIRCUITED TO 277/480V PANELBOARD HP-2 U.O.N.
2. REFER TO NEL 400 FOR LIGHT FIXTURE SCHEDULE.
3. SEE DWG SERIES NGN FOR SYMBOLS AND ABBREVIATIONS.
4. SEE DWG SERIES NEL 500 FOR PANEL SCHEDULES.

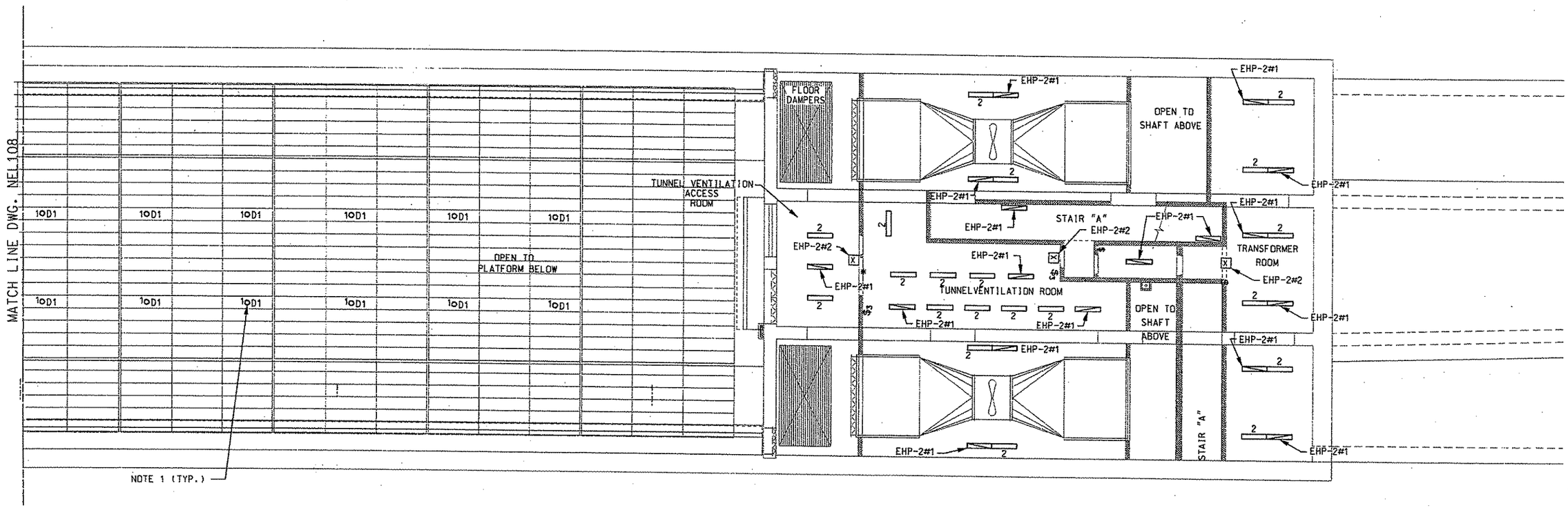

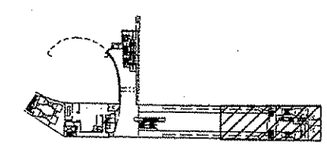

100% SUBMISSION

COOPER.CARRY
59 WEST 17TH STREET
12TH FLOOR
NEW YORK, NY 10011
212-691-8271
WWW.COOPERCARRY.COM

NO.	DATE	DESCRIPTION

REVISIONS

THE PREPARATION OF THIS DOCUMENT HAS BEEN FINANCED IN PART THROUGH A GRANT FROM THE FEDERAL TRANSIT ADMINISTRATION, U.S. DEPARTMENT OF TRANSPORTATION, UNDER THE URBAN MASS TRANSPORTATION ACT OF 1964, AS AMENDED, FOR THE PORT AUTHORITY OF ALLEGHENY COUNTY, PENNSYLVANIA.

SIGNATURE

DMJM HARRIS | AECOM
FOUR GATEWAY CENTER
20TH FLOOR
PITTSBURGH, PA 15222

APPROVED DATE

DESIGNED	S.J.
DRAWN	K.W.
CHECKED	A.C.
IN CHARGE	H.S.
DATE	APRIL 3, 2008
SCALE	0' 8' 16'

PORT AUTHORITY OF ALLEGHENY COUNTY
PITTSBURGH PENNSYLVANIA

NORTH SHORE CONNECTOR
NORTH SIDE STATION FINISHES
PARTIAL CONCOURSE LEVEL
LIGHTING PLAN C

Port Authority

CONTRACT NO. NSC-011
DWG. NO. NEL109
SHT.

$DATE$ $TIME$
$FILE$

NOTE:

1. ALL LIGHTING SHALL BE CIRCUITED TO 277/480V PANELBOARD HP-1 U.O.N.
2. TYPE "E" FIXTURES TO BE MOUNTED ON FLOOR.
3. PROVIDE TRANSFORMER BELOW PLATFORM SLAB FOR TYPE "E" FIXTURES.
4. REFER TO NEL 400 FOR LIGHT FIXTURE SCHEDULE.
5. SEE DWG SERIES NGN FOR SYMBOLS AND ABBREVIATIONS.
6. SEE DWG SERIES NEL 500 FOR PANEL SCHEDULES.

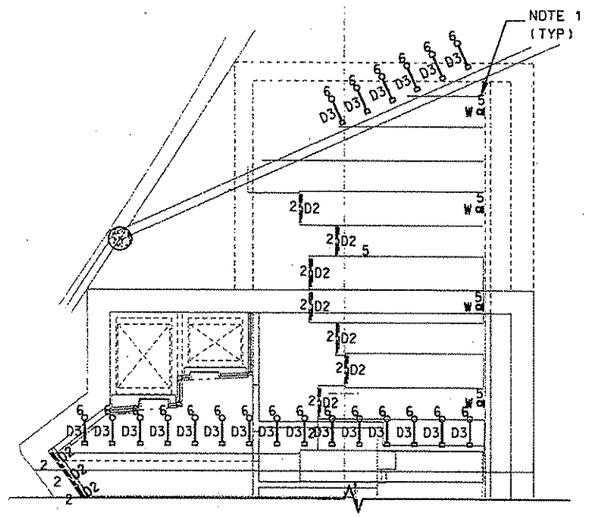

PARTIAL STREET LEVEL
AT PLAZA

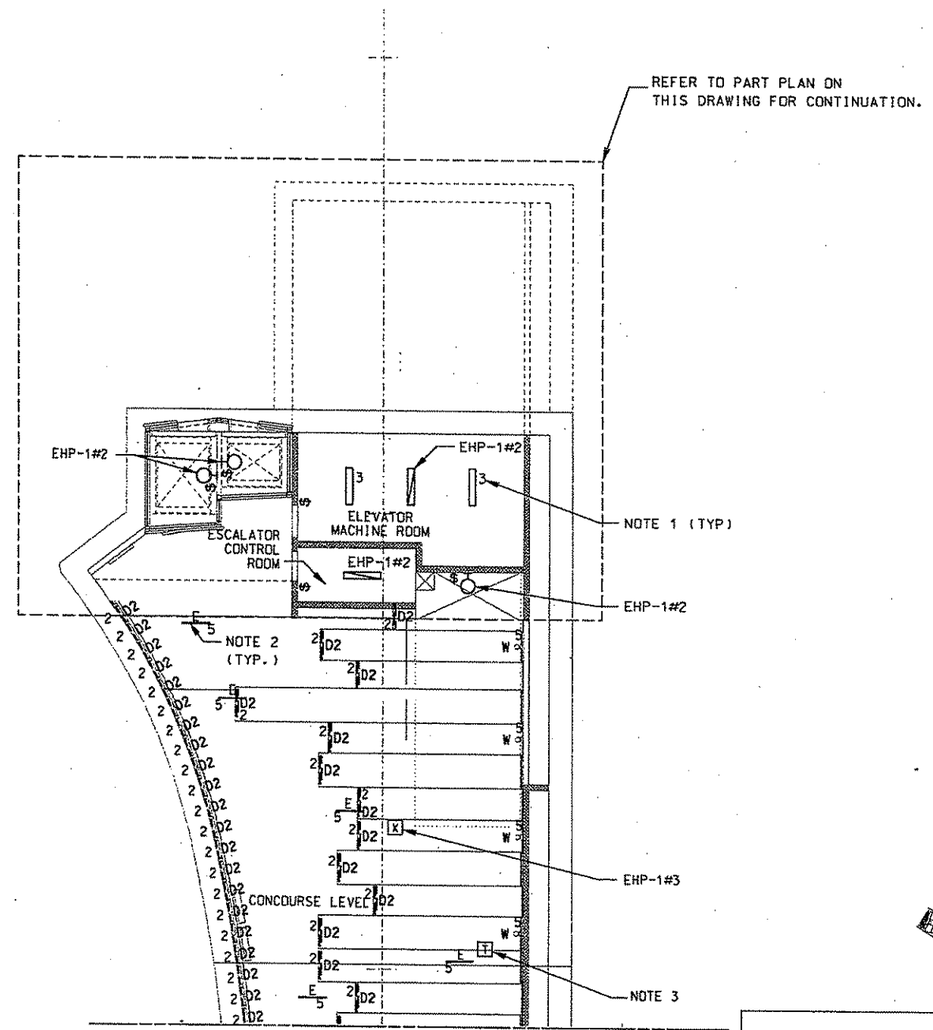

MATCH LINE DWG. NEL108

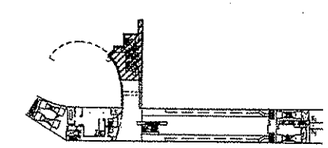

100% SUBMISSION

COOPER CARRY
59 WEST 17TH STREET
12TH FLOOR
NEW YORK, NY 10011
212-691-9271
WWW.COOPERCARRY.COM

NO.	DATE	DESCRIPTION

REVISIONS

THE PREPARATION OF THIS DOCUMENT HAS BEEN FINANCED IN PART THROUGH A GRANT FROM THE FEDERAL TRANSIT ADMINISTRATION, U.S. DEPARTMENT OF TRANSPORTATION, UNDER THE URBAN MASS TRANSPORTATION ACT OF 1964, AS AMENDED. FOR THE PORT AUTHORITY OF ALLEGHENY COUNTY, PENNSYLVANIA.

SIGNATURE

DMJM HARRIS | AECOM
FOUR GATEWAY CENTER
20TH FLOOR
PITTSBURGH, PA 15222

APPROVED DATE

DESIGNED	S.J.
DRAWN	I.C.
CHECKED	A.C.
IN CHARGE	H.S.
DATE	APRIL 3, 2008
SCALE	0' 8' 16'

PORT AUTHORITY OF ALLEGHENY COUNTY
PITTSBURGH PENNSYLVANIA

NORTH SHORE CONNECTOR
NORTH SIDE STATION FINISHES
PARTIAL CONCOURSE LEVEL
LIGHTING PLAN D

Port Authority

CONTRACT NO. NSC-011
DWG. NO. NEL 110 SHT.

$DATE$ $TIME$
$FILE$

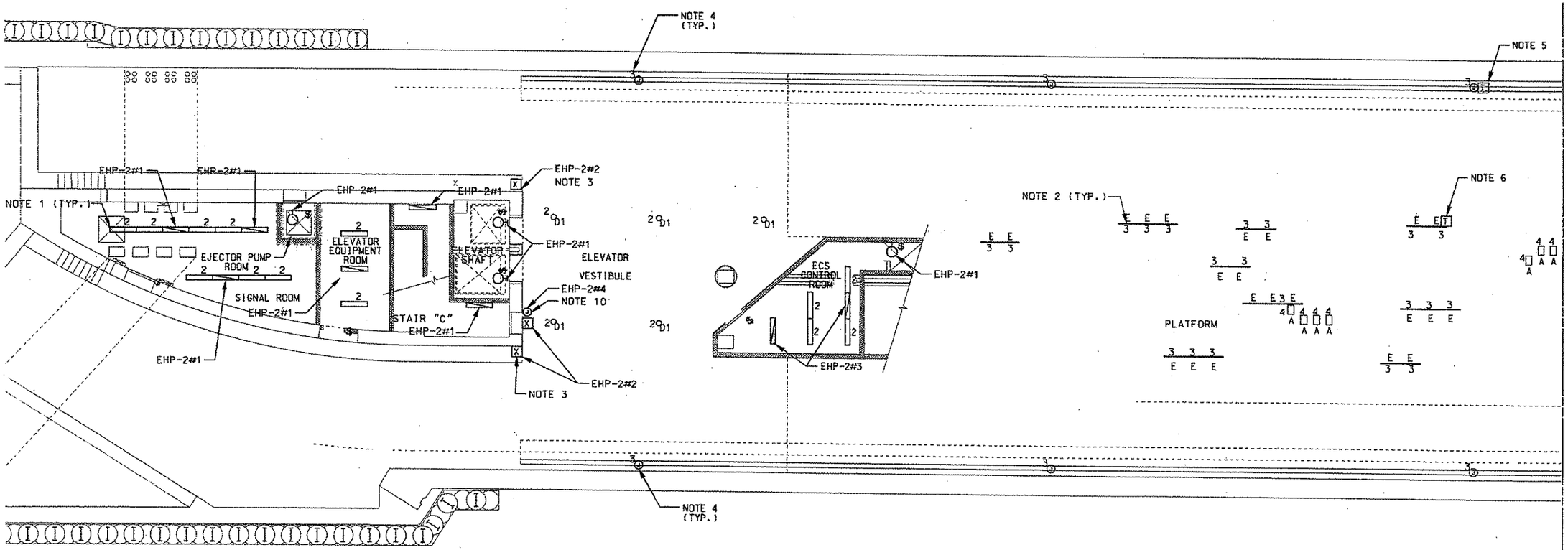

NOTES:

1. ALL LIGHTING SHALL BE CIRCUITED TO 277/480V PANELBOARD HP-2 U.O.N.
2. TYPE 'E' FIXTURES TO BE MOUNTED ON FLOOR.
3. EXIT SIGN TO FACE ANCILLARY AREA.
4. SEE DWG. NEL401 FOR DETAIL. SLOPING MTL. PANEL WALL WITH LIGHT STRIPS
5. PROVIDE TRANSFORMER BELOW PLATFORM SLAB FOR TYPE "G" LED FIXTURES.
6. PROVIDE TRANSFORMER BELOW PLATFORM SLAB FOR TYPE "E" FIXTURES.
7. REFER TO NEL 400 FOR LIGHT FIXTURE SCHEDULE.
8. SEE DWG SERIES NGN FOR SYMBOLS AND ABBREVIATIONS.
9. SEE DWG SERIES NEL 500 FOR PANEL SCHEDULES.
10. COORDINATE EXACT LOCATIONS OF ILLUMINATED SIGNS FOR AREAS OF REFUGE WITH ARCHITECTURAL AND SIGNAGE PLANS.

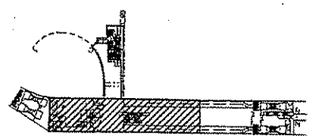

100% SUBMISSION

COOPER, CARRY
58 WEST 17TH STREET
12TH FLOOR
NEW YORK, NY 10011
212-691-8271
WWW.COOPERCARRY.COM

NO.	DATE	DESCRIPTION

REVISIONS

THE PREPARATION OF THIS DOCUMENT HAS BEEN FINANCED IN PART THROUGH A GRANT FROM THE FEDERAL TRANSIT ADMINISTRATION, U.S. DEPARTMENT OF TRANSPORTATION, UNDER THE URBAN MASS TRANSPORTATION ACT OF 1964, AS AMENDED, FOR THE PORT AUTHORITY OF ALLEGHENY COUNTY, PENNSYLVANIA.

SIGNATURE

DMJM HARRIS | AECOM
FOUR GATEWAY CENTER
20TH FLOOR
PITTSBURGH, PA 15222

APPROVED DATE

DESIGNED	S.J.
DRAWN	I.C.
CHECKED	A.C.
IN CHARGE	H.S.
DATE	APRIL 3, 2008
SCALE	0' 8' 16'

PORT AUTHORITY OF ALLEGHENY COUNTY
PITTSBURGH PENNSYLVANIA

NORTH SHORE CONNECTOR
NORTH SIDE STATION FINISHES
PARTIAL PLATFORM LEVEL
LIGHTING PLAN B

Port Authority

CONTRACT NO. NSC-011
DWG. NO. NEL111
SHT.

NOTES:

1. ALL LIGHTING SHALL BE CIRCUITED TO 277/480V PANELBOARD HP-2 U.O.N.
2. TYPE 'E' FIXTURES TO BE MOUNTED ON FLOOR.
3. EXIT SIGN TO FACE ANCILLARY AREA.
4. REFER TO NEL 400 FOR LIGHT FIXTURE SCHEDULE.
5. SEE DWG SERIES NGN FOR SYMBOLS AND ABBREVIATIONS.
6. SEE DWG SERIES NEL 500 FOR PANEL SCHEDULES.
7. PROVIDED TRANSFORMER BECOMES PLATFORM SLAB FOR TYPE "E" FISTURES.
8. SEE DWG NEL 401 FOR DETAIL. SLOPING MTL. PANEL WALL WITH LIGHT STRIPS.
9. COORDINATE EXACT LOCATIONS OF ILLUMINATED SIGNS FOR AREAS OF REFUGE WITH ARCHITECTURAL SIGNAGE PLANS.

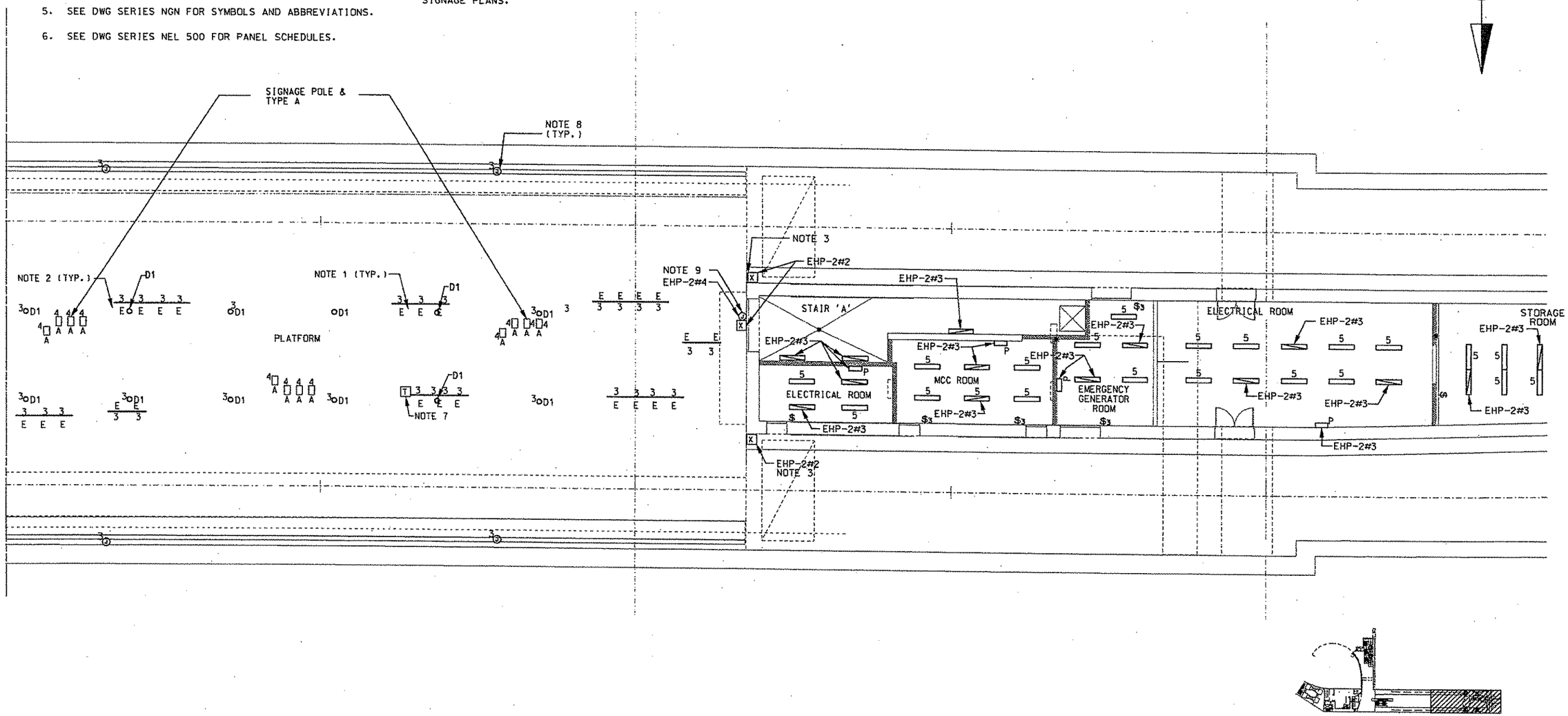

100% SUBMISSION

COOPER CARRY
58 WEST 17TH STREET
12TH FLOOR
NEW YORK, NY 10011
212-691-0271
WWW.COOPERCARRY.COM

NO.	DATE	DESCRIPTION

REVISIONS

THE PREPARATION OF THIS DOCUMENT HAS BEEN FINANCED IN PART THROUGH A GRANT FROM THE FEDERAL TRANSIT ADMINISTRATION, U.S. DEPARTMENT OF TRANSPORTATION, UNDER THE URBAN MASS TRANSPORTATION ACT OF 1964, AS AMENDED, FOR THE PORT AUTHORITY OF ALLEGHENY COUNTY, PENNSYLVANIA.

SIGNATURE

DMJM HARRIS | AECOM
FOUR GATEWAY CENTER
20TH FLOOR
PITTSBURGH, PA 15222

APPROVED DATE

DESIGNED	S.J.
DRAWN	I.C.
CHECKED	A.C.
IN CHARGE	H.S.
DATE	APRIL 3, 2008
SCALE	0' 8' 16'

PORT AUTHORITY OF ALLEGHENY COUNTY
PITTSBURGH PENNSYLVANIA

NORTH SHORE CONNECTOR
NORTH SIDE STATION FINISHES
PARTIAL PLATFORM LEVEL
LIGHTING PLAN C

Port Authority

CONTRACT NO. NSC-011
DWG. NO. NEL112
SHT.

$TIME$
$DATE$
$FILE$

NOTES:

1. SEE DWG SERIES NGN FOR SYMBOLS AND ABBREVIATIONS.
2. SEE DWG SERIES NEL500 FOR PANEL SCHEDULES.

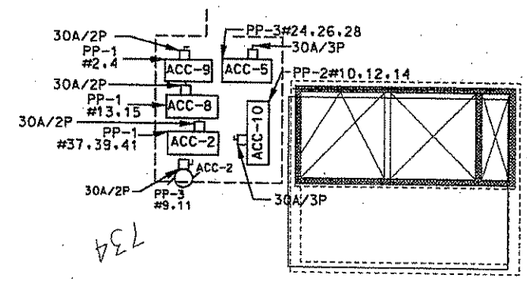

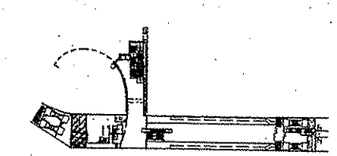

100% SUBMISSION

PORT AUTHORITY OF ALLEGHENY COUNTY
PITTSBURGH PENNSYLVANIA

NORTH SHORE CONNECTOR
NORTH SIDE STATION FINISHES
PARTIAL STREET LEVEL
POWER PLAN A

Port Authority

CONTRACT NO. NSC-011
DWG. NO. NEL113
SHT.

DESIGNED S.J.
DRAWN K.W.
CHECKED A.C.
IN CHARGE H.S.
DATE APRIL 3, 2008
SCALE 0' 8' 16'

DMJM HARRIS | AECOM
FOUR GATEWAY CENTER
20TH FLOOR
PITTSBURGH, PA 15222

APPROVED DATE

SIGNATURE

THE PREPARATION OF THIS DOCUMENT HAS BEEN FINANCED IN PART THROUGH A GRANT FROM THE FEDERAL TRANSIT ADMINISTRATION, U.S. DEPARTMENT OF TRANSPORTATION, UNDER THE URBAN MASS TRANSPORTATION ACT OF 1964, AS AMENDED, FOR THE PORT AUTHORITY OF ALLEGHENY COUNTY, PENNSYLVANIA.

NO.	DATE	DESCRIPTION

REVISIONS

COOPER CARRY
58 WEST 17TH STREET
12TH FLOOR
NEW YORK, NY 10011
212-691-8271
WWW.COOPERCARRY.COM

$DATE$ $TIME$
$FILE$

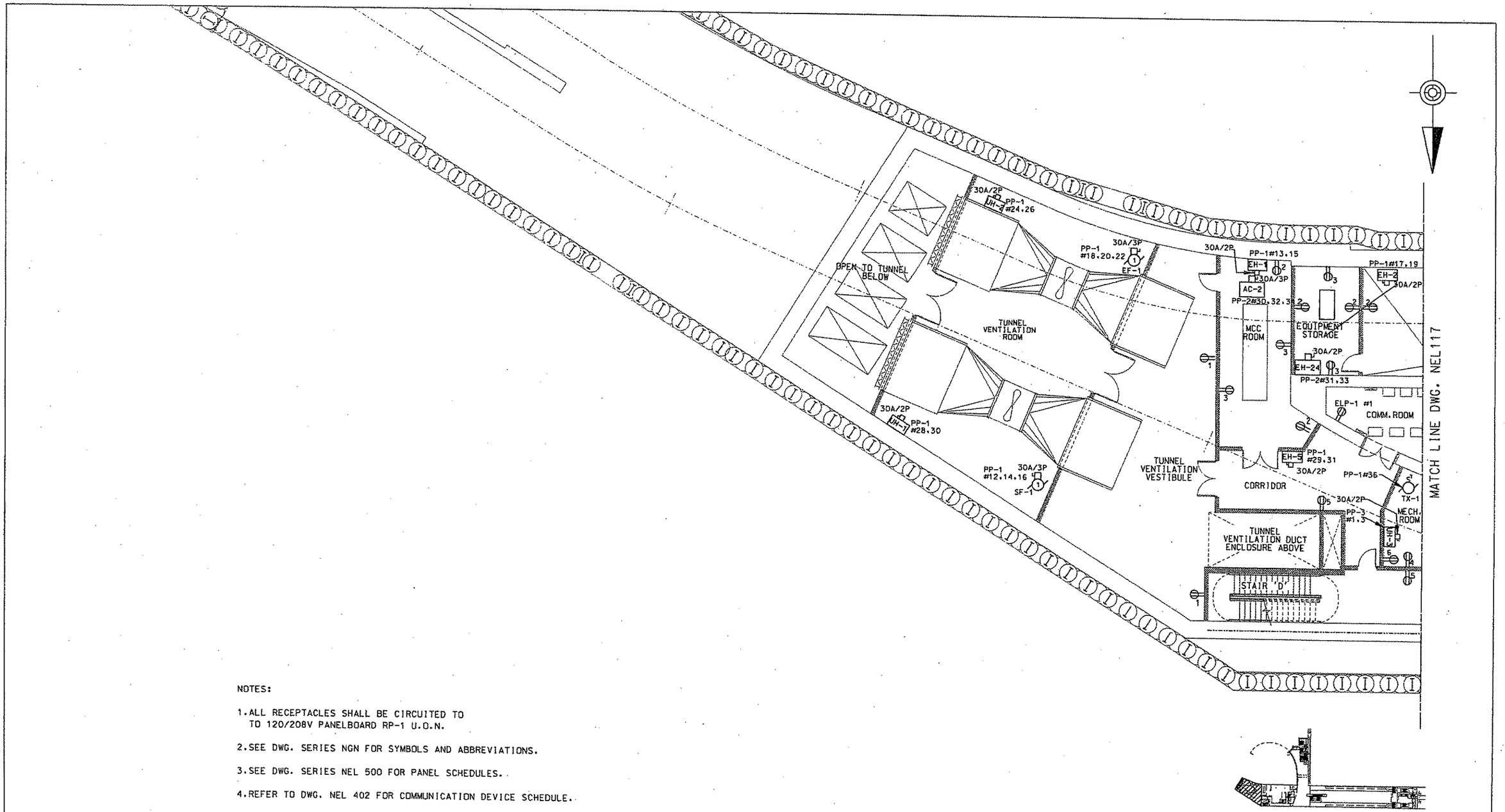

NOTES:

1. ALL RECEPTACLES SHALL BE CIRCUITED TO TO 120/208V PANELBOARD RP-1 U.O.N.
2. SEE DWG. SERIES NGN FOR SYMBOLS AND ABBREVIATIONS.
3. SEE DWG. SERIES NEL 500 FOR PANEL SCHEDULES.
4. REFER TO DWG. NEL 402 FOR COMMUNICATION DEVICE SCHEDULE.

100% SUBMISSION

COOPER CARRY
50 WEST 17TH STREET
12TH FLOOR
NEW YORK, NY 10011
212-691-8271
WWW.COOPERCARRY.COM

NO.	DATE	DESCRIPTION

REVISIONS

THE PREPARATION OF THIS DOCUMENT HAS BEEN FINANCED IN PART THROUGH A GRANT FROM THE FEDERAL TRANSIT ADMINISTRATION, U.S. DEPARTMENT OF TRANSPORTATION, UNDER THE URBAN MASS TRANSPORTATION ACT OF 1964, AS AMENDED. FOR THE PORT AUTHORITY OF ALLEGHENY COUNTY, PENNSYLVANIA.

SIGNATURE

DMJM HARRIS | AECOM
FOUR GATEWAY CENTER
20TH FLOOR
PITTSBURGH, PA 15222

APPROVED DATE

DESIGNED	S.J.
DRAWN	K.W.
CHECKED	A.C.
IN CHARGE	H.S.
DATE	APRIL 3, 2008
SCALE	0' 8' 16'

PORT AUTHORITY OF ALLEGHENY COUNTY
PITTSBURGH PENNSYLVANIA

NORTH SHORE CONNECTOR
NORTH SIDE STATION FINISHES
PARTIAL CONCOURSE LEVEL
POWER PLAN A

Port Authority

CONTRACT NO. NSC-011
DWG. NO. NEL116
SHT.

$DATE$ $TIME$
$FILE$

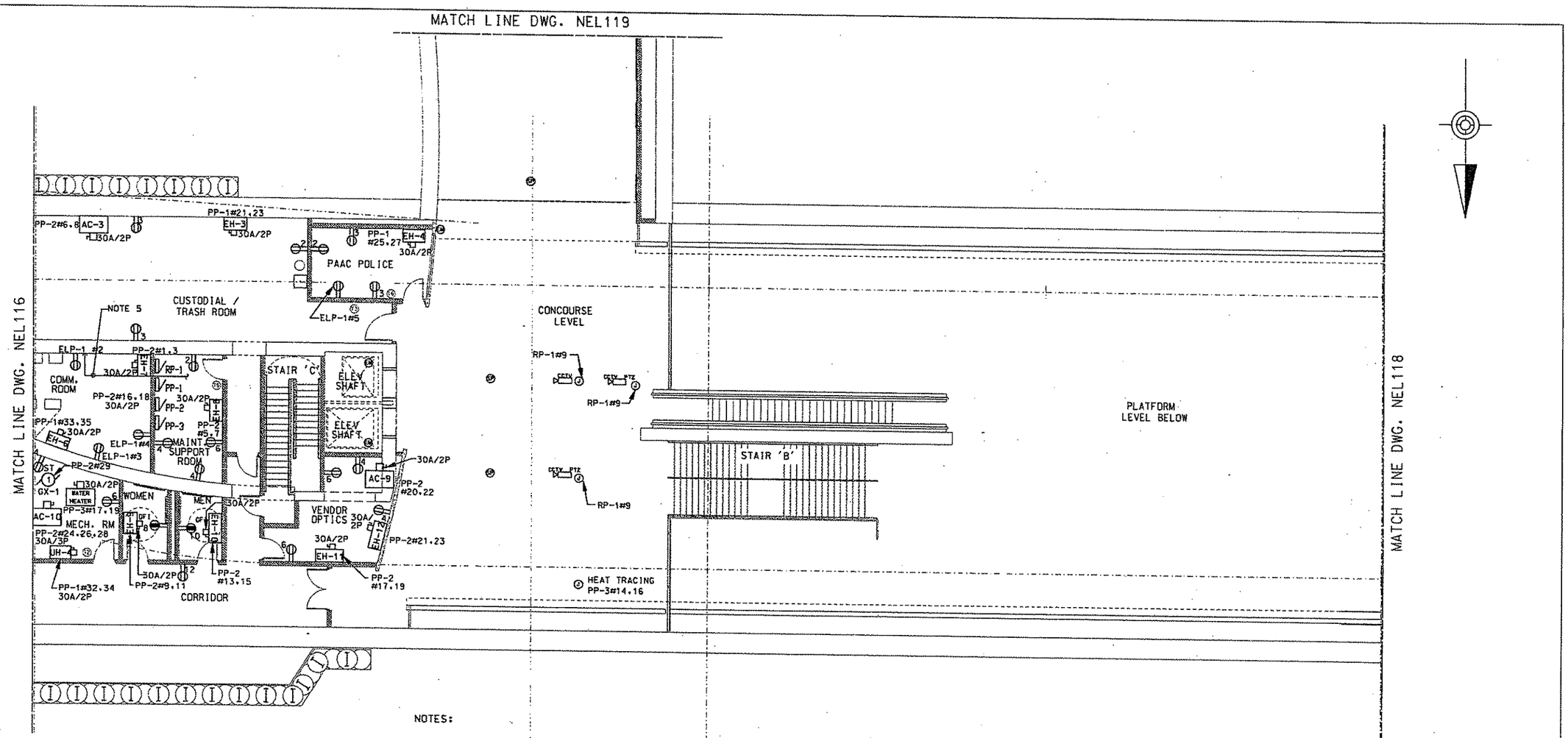

NOTES:

1. ALL RECEPTACLES SHALL BE CIRCUITED TO TO 120/208V PANELBOARD RP-1 U.O.N.

2. SEE DWG. SERIES NGN FOR SYMBOLS AND ABBREVIATIONS.

3. SEE DWG. SERIES NEL 500 FOR PANEL SCHEDULES.

4. REFER TO DWG. NEL 402 FOR COMMUNICATION DEVICE SCHEDULE.

5. PROVIDE (3) 1" CONDUIT FROM COMMUNICATION ROOM TO SIGNAL ROOM. CONNECTION TO COMMUNICATION POWER PANEL IS TO BE PROVIDED UNDER CONTRACT 009. REFER TO DWG NEL606 FOR FEEDER SIZES. COORDINATE LOCATION OF COMMUNICATION POWER PANEL PRIOR TO ROUTING OF CONDUITS.

6. PROVIDE 1" CONDUIT WITH RG-6 (COAX) FROM COMMUNICATIONS ROOM TO PAAC POLICE FOR CCTV SYSTEM. COORDINATE TERMINATION POINT AT BOTH ENDS WITH PAAC.

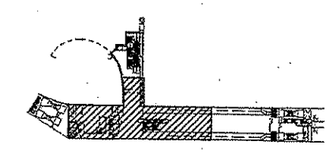

100% SUBMISSION

COOPER CARRY
58 WEST 17TH STREET
12TH FLOOR
NEW YORK, NY 10011
212-691-8271
WWW.COOPERCARRY.COM

NO.	DATE	DESCRIPTION

REVISIONS

THE PREPARATION OF THIS DOCUMENT HAS BEEN FINANCED IN PART THROUGH A GRANT FROM THE FEDERAL TRANSIT ADMINISTRATION, U.S. DEPARTMENT OF TRANSPORTATION, UNDER THE URBAN MASS TRANSPORTATION ACT OF 1964, AS AMENDED. FOR THE PORT AUTHORITY OF ALLEGHENY COUNTY, PENNSYLVANIA.

SIGNATURE

DMJM HARRIS | AECOM
FOUR GATEWAY CENTER
20TH FLOOR
PITTSBURGH, PA 15222

APPROVED DATE

DESIGNED	S.J.
DRAWN	K.W.
CHECKED	A.C.
IN CHARGE	H.S.
DATE	APRIL 3, 2008
SCALE	0' 8' 16'

PORT AUTHORITY OF ALLEGHENY COUNTY
PITTSBURGH PENNSYLVANIA

NORTH SHORE CONNECTOR
NORTH SIDE STATION FINISHES
PARTIAL CONCOURSE LEVEL
POWER PLAN B

Port Authority

CONTRACT NO. NSC-011

DWG. NO. NEL117 SHT.

@DATE@ @TIME@
@FILE@

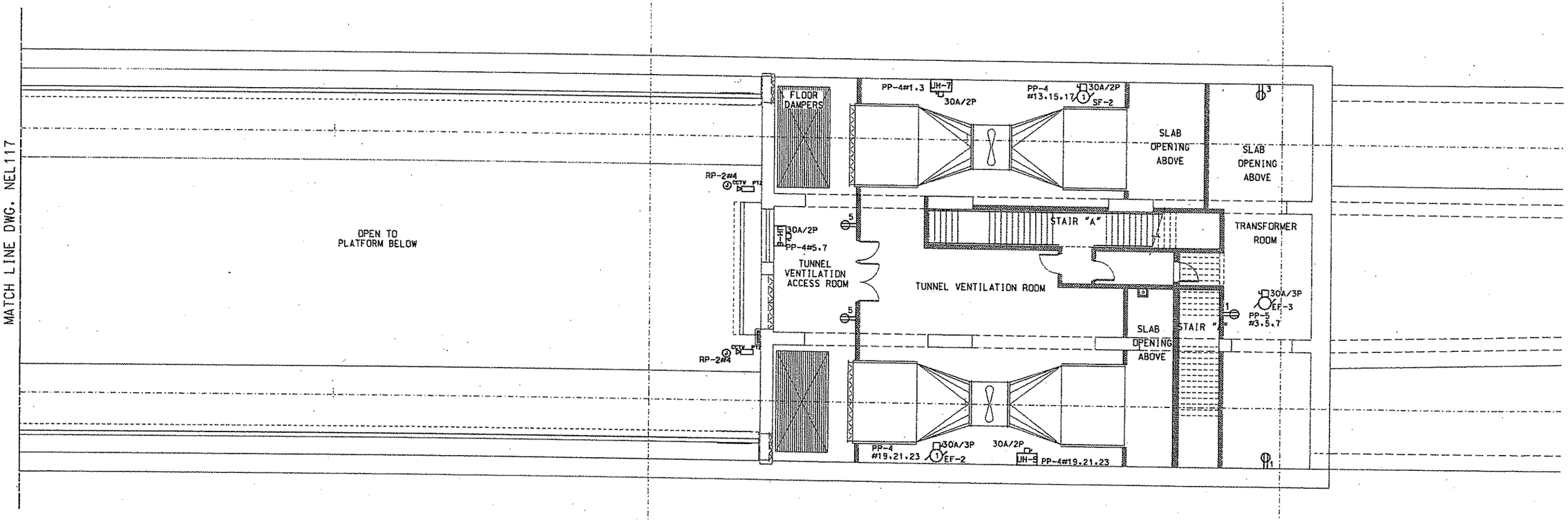

NOTES:

1. ALL RECEPTACLES SHALL BE CIRCUITED TO TO 120/208V PANELBOARD RP-2 U.O.N.
2. SEE DWG. SERIES NGN FOR SYMBOLS AND ABBREVIATIONS.
3. SEE DWG. SERIES NEL500 FOR PANEL SCHEDULES.
4. REFER TO DWG. NEL402 FOR COMMUNICATION DEVICE SCHEDULE.

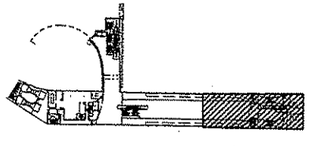

100% SUBMISSION

COOPER & CARRY
58 WEST 17TH STREET
12TH FLOOR
NEW YORK, NY 10011
212-691-8271
WWW.COOPERCARRY.COM

NO.	DATE	DESCRIPTION

REVISIONS

THE PREPARATION OF THIS DOCUMENT HAS BEEN FINANCED IN PART THROUGH A GRANT FROM THE FEDERAL TRANSIT ADMINISTRATION, U.S. DEPARTMENT OF TRANSPORTATION, UNDER THE URBAN MASS TRANSPORTATION ACT OF 1964, AS AMENDED, FOR THE PORT AUTHORITY OF ALLEGHENY COUNTY, PENNSYLVANIA.

SIGNATURE

DMJM HARRIS | AECOM
FOUR GATEWAY CENTER
20TH FLOOR
PITTSBURGH, PA 15222

APPROVED DATE

DESIGNED	S.J.
DRAWN	K.W.
CHECKED	A.C.
IN CHARGE	H.S.
DATE	APRIL 3, 2008
SCALE	0' 8' 16'

PORT AUTHORITY OF ALLEGHENY COUNTY
PITTSBURGH PENNSYLVANIA

NORTH SHORE CONNECTOR
NORTH SIDE STATION FINISHES
PARTIAL CONCOURSE LEVEL
POWER PLAN C

Port Authority

CONTRACT NO. NSC-011

DWG. NO. NEL118 SHT.

#DATE$ $TIME$
#FILE$

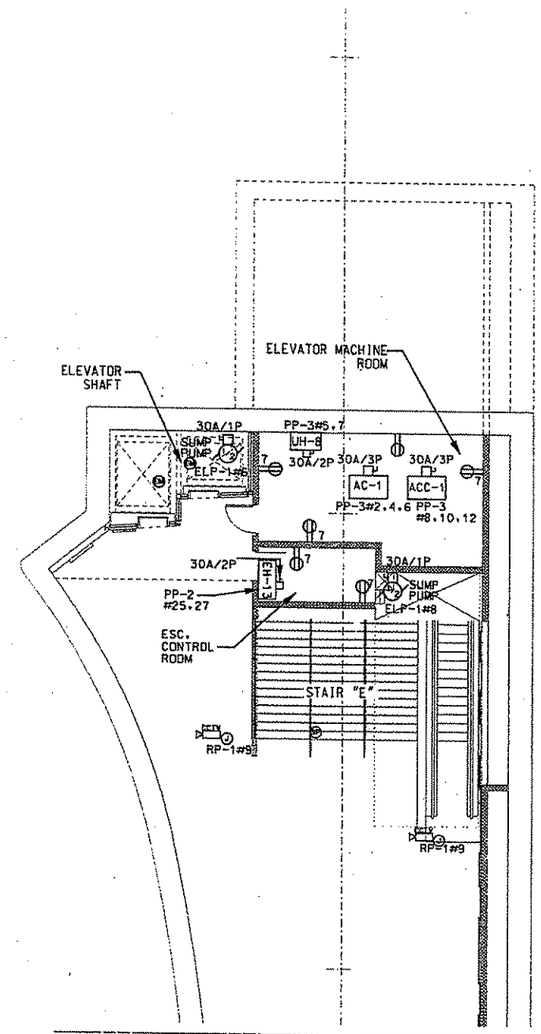

MATCH LINE DWG. NEL117

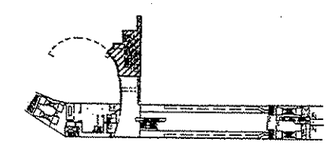

NOTES:

1. ALL RECEPTACLES SHALL BE CIRCUITED TO TO 120/208V PANELBOARD RP-1 U.O.N.
2. SEE DWG. SERIES NGN FOR SYMBOLS AND ABBREVIATIONS.
3. SEE DWG. SERIES NEL 500 FOR PANEL SCHEDULES.
4. REFER TO DWG. NEL 402 FOR COMMUNICATION DEVICE SCHEDULE.

100% SUBMISSION

COOPER CARRY
59 WEST 17TH STREET
12TH FLOOR
NEW YORK, NY 10011
212-691-9271
WWW.COOPERCARRY.COM

NO.	DATE	DESCRIPTION

REVISIONS

THE PREPARATION OF THIS DOCUMENT HAS BEEN FINANCED IN PART THROUGH A GRANT FROM THE FEDERAL TRANSIT ADMINISTRATION, U.S. DEPARTMENT OF TRANSPORTATION, UNDER THE URBAN MASS TRANSPORTATION ACT OF 1964, AS AMENDED, FOR THE PORT AUTHORITY OF ALLEGHENY COUNTY, PENNSYLVANIA.

SIGNATURE

DMJM HARRIS | AECOM
FOUR GATEWAY CENTER
20TH FLOOR
PITTSBURGH, PA 15222

APPROVED DATE

DESIGNED	S.J.
DRAWN	K.W.
CHECKED	A.C.
IN CHARGE	H.S.
DATE	APRIL 3, 2008
SCALE	0' 8' 16'

PORT AUTHORITY OF ALLEGHENY COUNTY
PITTSBURGH PENNSYLVANIA

NORTH SHORE CONNECTOR
NORTH SIDE STATION FINISHES
PARTIAL CONCOURSE LEVEL
POWER PLAN B

Port Authority

CONTRACT NO. NSC-011

DWG. NO. NEL119 SHT.

$DATE$ $TIME$
$FILE$

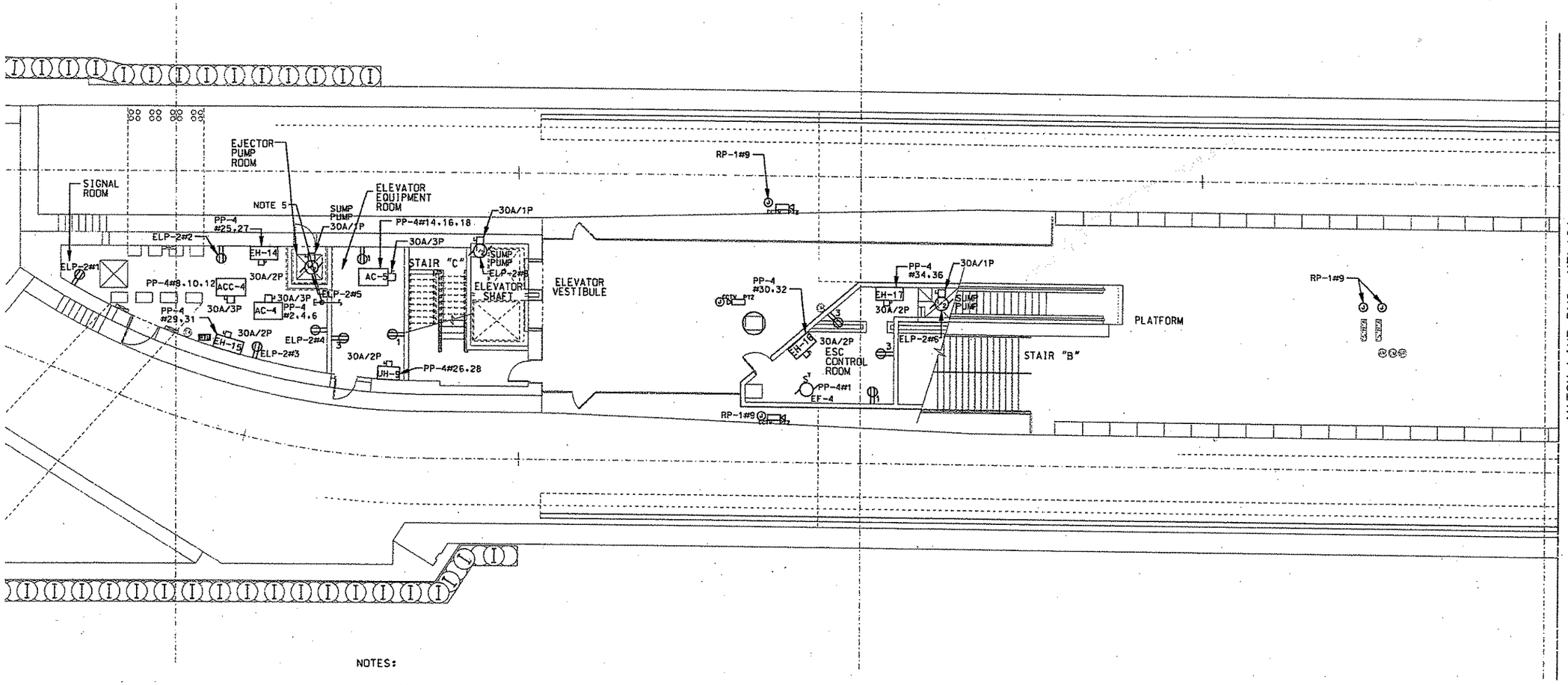

NOTES:

1. ALL RECEPTACLES SHALL BE CIRCUITED TO TO 120/208V PANELBOARD RP-1 U.O.N.

2. SEE DWG. SERIES NGN FOR SYMBOLS AND ABBREVIATIONS.

3. SEE DWG. SERIES NEL 500 FOR PANEL SCHEDULES.

4. REFER TO DWG. NEL 402 FOR COMMUNICATION DEVICE SCHEDULE.

5. PROVIDE (3) 1" CONDUITS FROM SIGNAL ROOM TO ELECTRIC ROOM. CONNECTION TO SINGALS POWER PANEL IS TO BE PROVIDED UNDER CONTRACT 009. REFER TO DWG NEL606 FOR FEEDER SIZES. COORDINATE LOCATION OF SIGNAL POWER PANEL PRIOR TO ROUTING OF CONDUITS.

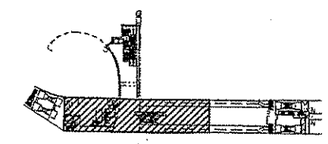

100% SUBMISSION

COOPER CARRY
50 WEST 17TH STREET
12TH FLOOR
NEW YORK, NY 10011
212-691-8271
WWW.COOPERCARRY.COM

NO.	DATE	DESCRIPTION

REVISIONS

THE PREPARATION OF THIS DOCUMENT HAS BEEN FINANCED IN PART THROUGH A GRANT FROM THE FEDERAL TRANSIT ADMINISTRATION, U.S. DEPARTMENT OF TRANSPORTATION, UNDER THE URBAN MASS TRANSPORTATION ACT OF 1964, AS AMENDED. FOR THE PORT AUTHORITY OF ALLEGHENY COUNTY, PENNSYLVANIA.

SIGNATURE

DMJM HARRIS | AECOM
FOUR GATEWAY CENTER
20TH FLOOR
PITTSBURGH, PA 15222

APPROVED DATE

DESIGNED	S.J.
DRAWN	K.W.
CHECKED	A.C.
IN CHARGE	H.S.
DATE	APRIL 3, 2008
SCALE	0' 8' 16'

PORT AUTHORITY OF ALLEGHENY COUNTY
PITTSBURGH PENNSYLVANIA

NORTH SHORE CONNECTOR
NORTH SIDE STATION FINISHES
PARTIAL PLATFORM LEVEL
POWER PLAN B

Port Authority

CONTRACT NO. NSC-011
DWG. NO. NEL120 SHT.

$DATE$ $TIME$
$FILE$

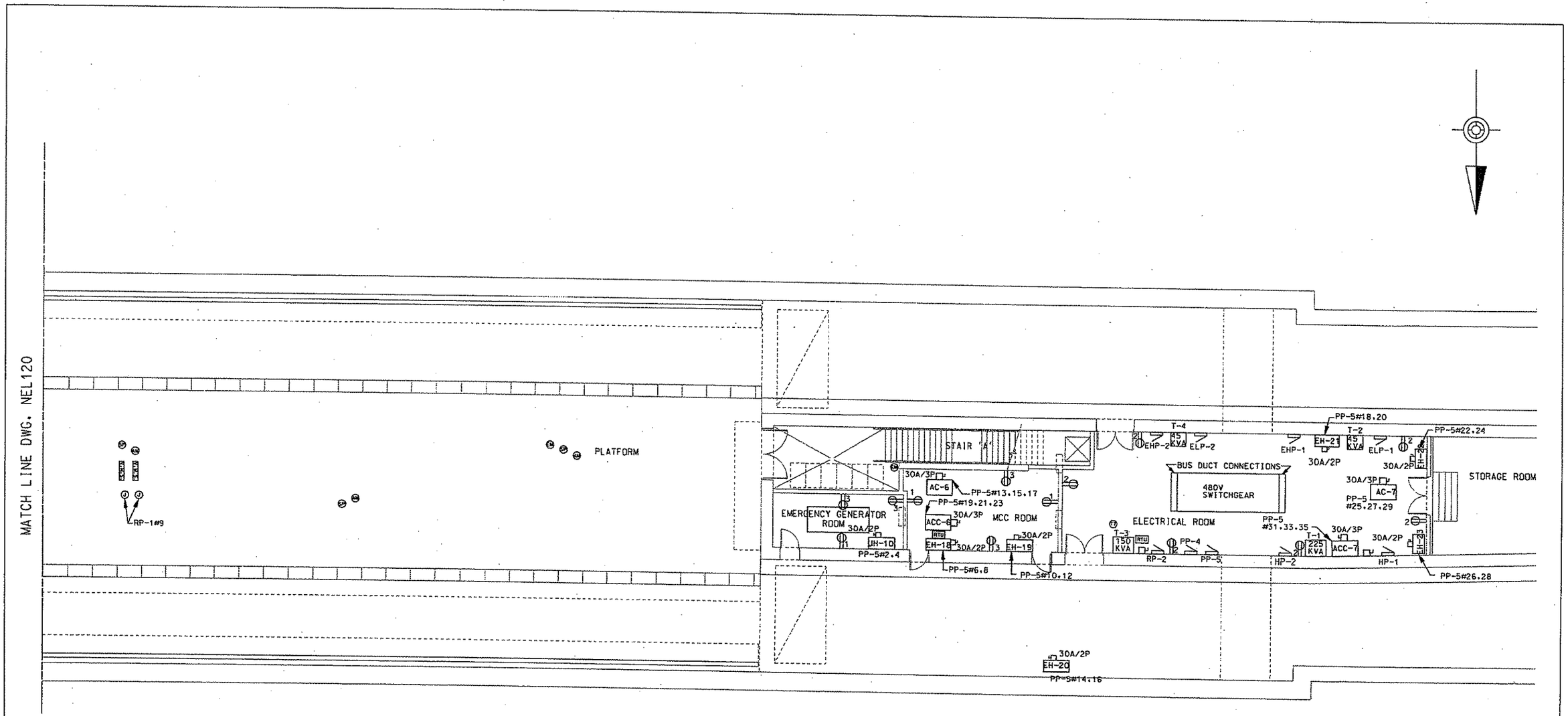

NOTES:

1. ALL RECEPTACLES SHALL BE CIRCUITED TO TO 120/208V PANELBOARD RP-1 U.O.N.
2. SEE DWG. SERIES NGN FOR SYMBOLS AND ABBREVIATIONS.
3. SEE DWG. SERIES NEL500 FOR PANEL SCHEDULES.
4. REFER TO DWG. NEL 402 FOR COMMUNICATION DEVICE SCHEDULE.

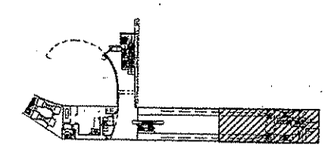

100% SUBMISSION

COOPER CARRY
50 WEST 17TH STREET
12TH FLOOR
NEW YORK, NY 10011
212-691-8271
WWW.COOPERCARRY.COM

NO.	DATE	DESCRIPTION

REVISIONS

THE PREPARATION OF THIS DOCUMENT HAS BEEN FINANCED IN PART THROUGH A GRANT FROM THE FEDERAL TRANSIT ADMINISTRATION, U.S. DEPARTMENT OF TRANSPORTATION, UNDER THE URBAN MASS TRANSPORTATION ACT OF 1964, AS AMENDED. FOR THE PORT AUTHORITY OF ALLEGHENY COUNTY, PENNSYLVANIA.

SIGNATURE

DMJM HARRIS | AECOM
FOUR GATEWAY CENTER
20TH FLOOR
PITTSBURGH, PA 15222

APPROVED DATE

DESIGNED	S.J.
DRAWN	K.W.
CHECKED	A.C.
IN CHARGE	H.S.
DATE	APRIL 3, 2008
SCALE	0' 8' 16'

PORT AUTHORITY OF ALLEGHENY COUNTY
PITTSBURGH PENNSYLVANIA

NORTH SHORE CONNECTOR
NORTH SIDE STATION FINISHES
PARTIAL PLATFORM LEVEL
POWER PLAN C

Port Authority

CONTRACT NO. NSC-011
DWG. NO. NEL121 SHT.

$DATE$ $TIME$
$FILE$

COMM DEVICE TO/FROM CABLE LIST - NORTH SIDE STATION

COMM DEVICE	DEVICE CHARACTERISTICS	TO DEVICE LOCATION	FROM	CABLE TYPE	CONDUIT NUMBER		COMMENTS	NSC-011 DRAWING #
						POWER		
CCTV #1	FIXED	ELEVATOR CONCOURSE LEVEL	COMM ROOM	F.O. - POWER	C1	C2	DOME - CEILING MOUNT	NAR909, NAR109
CCTV #2	PTZ	CONCOURSE LEVEL CENTER ON STAIRS	COMM ROOM	F.O. - POWER	C3	C4	DOME - CEILING MOUNT	NAR909, NAR109
CCTV #3	PTZ	CONCOURSE LEVEL CENTER ON ESCALATOR	COMM ROOM	F.O. - POWER	C5	C6	DOME - CEILING MOUNT	NAR909, NAR109
CCTV #4	FIXED	ELEVATOR CONCOURSE LEVEL	COMM ROOM	F.O. - POWER	C7	C8	DOME - CEILING MOUNT	NAR911
CCTV #5	PTZ	CONCOURSE LEVEL	COMM ROOM	F.O. - POWER	C9	C10	DOME - CEILING MOUNT	NAR911
CCTV #6	FIXED	PLATFORM ELEVATOR VESTIBULE	COMM ROOM	F.O. - POWER	C11	C12	DOME - CEILING MOUNT	NAR913, NAR113
CCTV #7	PTZ	PLATFORM	COMM ROOM	F.O. - POWER	C13	C14	DOME - CEILING MOUNT	NAR913, NAR113
CCTV #8	PTZ	PLATFORM	COMM ROOM	F.O. - POWER	C15	C16	DOME - CEILING MOUNT	NAR913, NAR113
CCTV #9	PTZ	PLATFORM	COMM ROOM	F.O. - POWER	C17	C18	DOME - WALL MOUNT	NAR910, NAR407
CCTV #10	PTZ	PLATFORM	COMM ROOM	F.O. - POWER	C19	C20	DOME - WALL MOUNT	NAR910, NAR407
VMS #1	DOUBLE SIDED	PLATFORM INBOUND	COMM ROOM	RS-422 (DATA)	C21	C22	COLUMN MOUNT	NAR113, 710
VMS #2	DOUBLE SIDED	PLATFORM OUTBOUND	COMM ROOM	RS-422 (DATA)	C23	C24	COLUMN MOUNT	NAR113, 114, 710
FIRE ALARM PANEL	ALARM CIRCUIT	PAAC POLICE ROOM	COMM ROOM	2 PAIR, #22 AWG SHIELDED	C25		FIRE ALARM AND FIRE TROUBLE	NAR109
AMBIENT NOISE SENSOR	1 & 2	PLATFORM AREA	COMM ROOM	2C - #22 AWG SHIELDED	C26		FLUSH MOUNT IN WALL 8 FEET ABOVE FLOOR	NAR113, 114
AMBIENT NOISE SENSOR	3 & 4	CONCOURSE LEVEL	COMM ROOM	2C - #22 AWG SHIELDED	C27		COLUMN MOUNTED SPEAKERS DAISY CHAINED INTO ONE ZONE	NAR109
SPEAKERS 1 - 4	BI-DIRECTIONAL	PLATFORM AREA	COMM ROOM	2 PAIR #14 AWG	C28		CEILING MOUNTED SPEAKERS DAISY CHAINED INTO ONE ZONE	NAR113, 114, 710
SPEAKERS 5 - 8	BI-DIRECTIONAL	CONCOURSE AREA	COMM ROOM	2 PAIR #14 AWG	C29		COLUMN MOUNT	NAR909, NAR911
PASSENGER (PATRON) PHONE #1	AUTOMATIC RING DOWN	PLATFORM AREA	COMM ROOM	2 PAIR, #22 AWG SHIELDED	C30		COLUMN MOUNT	NAR113
PASSENGER (PATRON) PHONE #2	AUTOMATIC RING DOWN	PLATFORM AREA	COMM ROOM	2 PAIR, #22 AWG SHIELDED	C31		FLUSH MOUNT IN WALL REFUGE AREA	NAR114
PASSENGER (PATRON) PHONE #3	AUTOMATIC RING DOWN	PLATFORM STAIR "A"	COMM ROOM	2 PAIR, #22 AWG SHIELDED	C32		FLUSH MOUNT IN WALL IN ELEVATOR VESTIBULE	NAR114
PASSENGER (PATRON) PHONE #4	AUTOMATIC RING DOWN	PLATFORM LEVEL ELEVATOR VESTIBULE	COMM ROOM	2 PAIR, #22 AWG SHIELDED	C33		FLUSH MOUNT IN WALL IN CONCOURSE AREA	NAR113
PASSENGER (PATRON) PHONE #5	AUTOMATIC RING DOWN	CONCOURSE LEVEL	COMM ROOM	2 PAIR, #22 AWG SHIELDED	C34		RUN CONDUIT TO ELEVATOR SHAFT	NAR109
PASSENGER (PATRON) PHONE #6	AUTOMATIC RING DOWN	PLATFORM LEVEL STAIR C	COMM ROOM	2 PAIR, #22 AWG SHIELDED	C35		FLUSH MOUNT IN WALL IN	NAR113
PASSENGER (PATRON) PHONE #7	AUTOMATIC RING DOWN	CONCOURSE LEVEL CORRIDOR M13	COMM ROOM	2 PAIR, #22 AWG SHIELDED	C36		FLUSH MOUNT IN WALL IN	NAR109
PASSENGER (PATRON) PHONE #14	AUTOMATIC RING DOWN	FIRE CONTROL PANEL	COMM ROOM	2 PAIR, #22 AWG SHIELDED	C37		MOUNTED IN PANEL	NAR107
MICROPHONE	-	FIRE CONTROL PANEL	COMM ROOM	XLR-F AUDIO CABLE SHIELDED	C38		MOUNTED IN PANEL	NAR107
ELEVATOR PHONE #1 (SUPPORT) PHONE BY OTHERS	AUTOMATIC RING DOWN	ELEVATOR N1 (EL. EQUIP. ROOM)	COMM ROOM	2 PAIR, #22 AWG SHIELDED	C39		RUN CONDUIT TO ELEVATOR SHAFT	NAR109
ELEVATOR PHONE #2 (SUPPORT) PHONE BY OTHERS	AUTOMATIC RING DOWN	ELEVATOR N2 (EL. EQUIP. ROOM)	COMM ROOM	2 PAIR, #22 AWG SHIELDED	C40		RUN CONDUIT TO ELEVATOR SHAFT	NAR109
ELEVATOR PHONE #3 (SUPPORT) PHONE BY OTHERS	AUTOMATIC RING DOWN	ELEVATOR N3 (MACHINE ROOM)	COMM ROOM	2 PAIR, #22 AWG SHIELDED	C41		RUN CONDUIT TO ELEVATOR SHAFT	NAR111, NEL119
ELEVATOR PHONE #4 (SUPPORT) PHONE BY OTHERS	AUTOMATIC RING DOWN	ELEVATOR N4 (MACHINE ROOM)	COMM ROOM	2 PAIR, #22 AWG SHIELDED	C42		RUN CONDUIT TO WALL (NOTE 2)	NAR111, NEL119
PAAC PHONE #1	TOUCH-TONE DIAL-UP	MCC ROOM M05	COMM ROOM	2 PAIR, #22 AWG SHIELDED	C43		RUN CONDUIT TO WALL (NOTE 2)	NAR108, NAR109
PAAC PHONE #2	TOUCH-TONE DIAL-UP	MECHANICAL ROOM M10	COMM ROOM	2 PAIR, #22 AWG SHIELDED	C44		RUN CONDUIT TO WALL (NOTE 2)	NAR109
PAAC PHONE #3	TOUCH-TONE DIAL-UP	CUSTODIAL ROOM M07	COMM ROOM	2 PAIR, #22 AWG SHIELDED	C45		RUN CONDUIT TO WALL (NOTE 2)	NAR109
PAAC PHONE #4	TOUCH-TONE DIAL-UP	SIGNAL ROOM P02	COMM ROOM	2 PAIR, #22 AWG SHIELDED	C46		RUN CONDUIT TO WALL (NOTE 2)	NAR113
PAAC PHONE #5	TOUCH-TONE DIAL-UP	MAINTENANCE ROOM M09	COMM ROOM	2 PAIR, #22 AWG SHIELDED	C47		RUN CONDUIT TO WALL (NOTE 2)	NAR109
PAAC PHONE #6	TOUCH-TONE DIAL-UP	POLICE ROOM M14	COMM ROOM	2 PAIR, #22 AWG SHIELDED	C48		RUN CONDUIT TO WALL (NOTE 2)	NAR109
PAAC PHONE #7	TOUCH-TONE DIAL-UP	ELECTRICAL ROOM P07	COMM ROOM	2 PAIR, #22 AWG SHIELDED	C49		RUN CONDUIT TO WALL (NOTE 2)	NAR114
PAAC PHONE #8	TOUCH-TONE DIAL-UP	ELECTRICAL ROOM P09	COMM ROOM	2 PAIR, #22 AWG SHIELDED	C50		RUN CONDUIT TO WALL (NOTE 2)	NAR114
PAAC PHONE #9	TOUCH-TONE DIAL-UP	MCC ROMM P08	COMM ROOM	2 PAIR, #22 AWG SHIELDED	C51		RUN CONDUIT TO WALL (NOTE 2)	NAR114
PAAC PHONE #10	TOUCH-TONE DIAL-UP	GENERATOR ROOM P11	COMM ROOM	2 PAIR, #22 AWG SHIELDED	C52		RUN CONDUIT TO WALL (NOTE 2)	NAR114
PAAC PHONE #11	TOUCH-TONE DIAL-UP	TRANSFORMER ROOM M17	COMM ROOM	2 PAIR, #22 AWG SHIELDED	C53		RUN CONDUIT TO WALL (NOTE 2)	NAR110
PAAC PHONE #12	TOUCH-TONE DIAL-UP	TUNNELL VENT ROOM M16B	COMM ROOM	3 PAIR, #22 AWG SHIELDED	C54		RUN CONDUIT TO WALL (NOTE 2)	NAR110
PAAC PHONE #13	TOUCH-TONE DIAL-UP	COMM ROOM	COMM ROOM	4 PAIR, #22 AWG SHIELDED	C55		RUN CONDUIT TO WALL (NOTE 3)	NAR109
RTU #1	-	MCC ROOM (EE)	COMM ROOM	2 PAIR, #22 AWG SHIELDED	C56		RUN CONDUIT TO WALL IN MCC ROOM	NAR108
RTU #2	-	MCC ROOM (WE)	COMM ROOM	2 PAIR, #22 AWG SHIELDED	C57		RUN CONDUIT TO WALL IN MCC ROOM	NAR114

NOTES:

1. WHERE POWER WIRING SIZE IS NOT INDICATED:
   WIRE #12 AWG MINIMUM SHALL BE USED FOR CIRCUITS LESS THAN 100 FEET IN LENGTH.
   WIRE #10 AWG SHALL BE USED FOR CIRCUITS FROM 100 FEET TO 150 FEET IN LENGTH.
   WIRE #8 AWG SHALL BE USED FOR CIRCUITS FROM 150 FEET TO 250 FEET IN LENGTH.

2. CONDUIT SHALL TERMINATE IN A FLUSH MOUNTED BOX AT THE LOCATION SHOWN ON THE DRAWINGS. THE VERTICAL CENTER OF THE BOX SHALL BE LOCATED 54" ABOVE THE FINISHED FLOOR.

3. PAAC PHONE #13 AND CONDUIT C55 BY NSC-009.

COMMUNICATIONS SYMBOLS (NIC)-SUPPLIED AND INSTALLED UNDER SEPARATE CONTRACT

- (SP) VOICE CONTROL LOUD SPEAKER
- CCTV CLOSED CIRCUIT SECURITY CAMERA
- (EM) SURFACE MOUNTED EMERGENCY ASSISTANCE TELEPHONE
- (AM) AMBIENT MICROPHONE
- [VMS] VARIABLE MESSAGE SIGN - PA ADA VISUAL SIGNAGE DOUBLE SIDED
- [RTU] DATA TRANSMISSION SYSTEM REMOTE TERMINAL UNIT
- (T) TELEPHONE

NO.	DATE	DESCRIPTION

REVISIONS

THE PREPARATION OF THIS DOCUMENT HAS BEEN FINANCED IN PART THROUGH A GRANT FROM THE FEDERAL TRANSIT ADMINISTRATION, U.S. DEPARTMENT OF TRANSPORTATION, UNDER THE URBAN MASS TRANSPORTATION ACT OF 1964, AS AMENDED, FOR THE PORT AUTHORITY OF ALLEGHENY COUNTY, PENNSYLVANIA.

SIGNATURE

DMJM HARRIS | AECOM
FOUR GATEWAY CENTER
20TH FLOOR
PITTSBURGH, PA. 15222

APPROVED DATE

DESIGNED	S.J.
DRAWN	K.W.
CHECKED	A.C.
IN CHARGE	H.S.
DATE	APRIL 3, 2008
SCALE	

PORT AUTHORITY OF ALLEGHENY COUNTY
PITTSBURGH PENNSYLVANIA

NORTH SHORE CONNECTOR
NORTH SIDE STATION FINISHES
COMMUNICATION DEVICE
SCHEDULE AND SYMBOL LIST

Port Authority

CONTRACT NO. NSC-011
DWG. NO. NEL402 SHT.

$DATE$ $TIME$
$FILE$

SCHEDULE FOR PANELS: RP-2 (WEST)

NORTH SHORE CONNECTOR

VOLTAGE: 120/208V, 3Ø, 4W | MLO: X | EQUIPMENT GROUND BUS 100A | POLES: 30 | MIN CB IC: 22,000 AIC

MAIN BUS: 100A | X MCB 100A | ISOLATED GROUND BUS | MTG: SURFACE | COMMENTS:

CKT #	SERVES	LOAD VA	BREAKER P	BREAKER TRIP	BRANCH CIRCUIT	PHASE A	PHASE B	PHASE C	BRANCH CIRCUIT	BREAKER TRIP	BREAKER P	LOAD VA	SERVES	CKT #
1	RECEPTACLES	900	1	20	2#12,1#12G-3/4"C	1980			2#12,1#12G-3/4"C	20	1	1080	RECEPTACLES	2
3	RECEPTACLES	1260	1	20	2#12,1#12G-3/4"C		1780			20	1	500	CCTV	4
5	RECEPTACLES	360	1	20	2#12,1#12G-3/4"C			360		20	1		SPARE	6
7	SPARE		1	20						20	1		SPARE	8
9	SPARE		1	20						20	1		SPARE	10
11	SPARE		1	20									SPACE	12
13	SPACE												SPACE	14
15	SPACE												SPACE	16
17	SPACE												SPACE	18
19	SPACE												SPACE	20
21	SPACE												SPACE	22
23	SPACE												SPACE	24
25	SPACE												SPACE	26
27	SPACE												SPACE	28
29	SPACE												SPACE	30
						1980	1780	360	(VA/PHASE)					
						16.5	14.7	3.0	(AMPS/PHASE)	11.4				

TOTAL CONNECTED LOAD (VA): 4100 | TOTAL CONNECTED LOAD (AMPS): 11.4
TOTAL DEMAND LOAD (VA): - | TOTAL DEMAND LOAD (AMPS): -

NOTES:

SCHEDULE FOR PANELS: PP-4(WEST)

NORTH SHORE CONNECTOR

VOLTAGE: 120/208V, 3Ø, 4W | MLO: X | EQUIPMENT GROUND BUS 225A | POLES: 42 | MIN CB IC: 22,000 AIC

MAIN BUS: 225A | X MCB 225A | ISOLATED GROUND BUS | MTG: SURFACE | COMMENTS:

CKT #	SERVES	LOAD VA	BREAKER P	BREAKER TRIP	BRANCH CIRCUIT	PHASE A	PHASE B	PHASE C	BRANCH CIRCUIT	BREAKER TRIP	BREAKER P	LOAD VA	SERVES	CKT #
1	UH-7	1362	2	20	2#12,1#12G-3/4"C	4878			3#8,1#10G-3/4"C	40	3	3516	AC-4	2
3		1362					4878					3516		4
5	UH-6	1362	2	20	2#12,1#12G-3/4"C			4878				3516		6
7		1362				3918						2556	ACC-4	8
9	UH-5	1362	2	20	2#12,1#12G-3/4"C		3918		3#10,1#10G-3/4"C	30	3	2556		10
11		1362						3918				2556		12
13	SF-2	552				2592						2040	AC-5	14
15		552	3	20	3#12,1#12G-3/4"C		2592		3#12,1#12G-3/4"C	25	3	2040		16
17		552						2592				2040		18
19	EF-2	552				552							SPARE	20
21		552	3	20	3#12,1#12G-3/4"C		552			20	3			22
23		552						552						24
25	EH-14	750	2	20	2#12,1#12G-3/4"C	2112								26
27		750					2112		2#12,1#12G-3/4"C	20	2	1362	UH-9	28
29	EH-15	750	2	20	2#12,1#12G-3/4"C			1500				1362		30
31		750				1500			2#12,1#12G-3/4"C	20	2	750	EH-16	32
33	SPARE		1	20			750					750		34
35	SPARE		1	20				750	2#12,1#12G-3/4"C	20	2	750	EH-17	36
37	SPARE		1	20						20	1		SPARE	38
39	SPARE		1	20						20	1		SPARE	40
41	SPARE		1	20						20	1		SPARE	42
						15552	14802	14190	(VA/PHASE)					
						129.6	123.4	118.3	(AMPS/PHASE)	123.7				

TOTAL CONNECTED LOAD (VA): 44544 | TOTAL CONNECTED LOAD (AMPS): 123.7
TOTAL DEMAND LOAD (VA): - | TOTAL DEMAND LOAD (AMPS): -

NOTES:

SCHEDULE FOR PANELS: PP-5(WEST)

NORTH SHORE CONNECTOR

VOLTAGE: 120/208V, 3Ø, 4W | MLO: X | EQUIPMENT GROUND BUS 225A | POLES: 42 | MIN CB IC: 22,000 AIC

MAIN BUS: 225A | X MCB 225A | ISOLATED GROUND BUS | MTG: SURFACE | COMMENTS:

CKT #	SERVES	LOAD VA	BREAKER P	BREAKER TRIP	BRANCH CIRCUIT	PHASE A	PHASE B	PHASE C	BRANCH CIRCUIT	BREAKER TRIP	BREAKER P	LOAD VA	SERVES	CKT #
1	EF-4	121	1	20	2#12,1#12G-3/4"C	1483			2#12,1#12G-3/4"C	20	2	1362	UH-10	2
3		1272					2634					1362		4
5	EF-3	1272	3	20	3#12,1#12G-3/4"C			2022	2#12,1#12G-3/4"C	20	2	750	EH-18	6
7		1272				2022						750		8
9	SPACE						750		2#12,1#12G-3/4"C	20	2	750	EH-19	10
11	SPACE							750				750		12
13	AC-6	2028				2778			2#12,1#12G-3/4"C	20	2	750	EH-20	14
15		2028	3	35	3#8,1#10G-3/4"C		2778					750		16
17		2028						2778	2#12,1#12G-3/4"C	20	2	750	EH-21	18
19	ACC-6	5892				6642						750		20
21		5892	3	70	3#4,1#6G-3/4"C		6642		2#12,1#12G-3/4"C	20	2	750	EH-22	22
23		5892						6642				750		24
25	AC-7	3516				4266			2#12,1#12G-3/4"C	20	2	750	EH-23	26
27		3516	3	40	3#8,1#10G-3/4"C		4266					750		28
29		3516						4878	2#12,1#12G-3/4"C	20	2	1362	UH-11	30
31	ACC-7	2556				3918						1362		32
33		2556	3	30	3#10,1#10G-3/4"C		2556			20	1		SPARE	34
35		2556						2556		20	1		SPARE	36
37	SPARE		1	20						20	1		SPARE	38
39	SPARE		1	20						20	1		SPARE	40
41	SPARE		1	20						20	1		SPARE	42
						21109	19626	19626	(VA/PHASE)					
						175.9	163.6	163.6	(AMPS/PHASE)	167.7				

TOTAL CONNECTED LOAD (VA): 60381 | TOTAL CONNECTED LOAD (AMPS): 167.7
TOTAL DEMAND LOAD (VA): - | TOTAL DEMAND LOAD (AMPS): -

NOTES:

SCHEDULE FOR PANELS: ELP-2(WEST)

NORTH SHORE CONNECTOR

VOLTAGE: 120/208V, 3Ø, 4W | MLO: | X EQUIPMENT GROUND BUS 100A | POLES: 42 | MIN CB IC: 22,000 AIC

MAIN BUS: 100A | X MCB 100A | ISOLATED GROUND BUS | MTG: SURFACE | COMMENTS:

CKT #	SERVES	LOAD VA	BREAKER P	BREAKER TRIP	BRANCH CIRCUIT	PHASE A	PHASE B	PHASE C	BRANCH CIRCUIT	BREAKER TRIP	BREAKER P	LOAD VA	SERVES	CKT #
1	COMM RM RECEPT.	1200	1	20	2#12,1#12G-3/4"C	2400			2#12,1#12G-3/4"C	20	1	1200	COMM RM RECEPT.	2
3	COMM RM RECEPT.	1200	1	20	2#12,1#12G-3/4"C		2400		2#12,1#12G-3/4"C	20	1	1200	COMM RM RECEPT.	4
5	ELEV SUMP PUMP	1200	1	20	2#12,1#12G-3/4"C			2400	2#12,1#12G-3/4"C	20	1	1200	ELEV SUMP PUMP	6
7	SPARE		1	20		1200			2#12,1#12G-3/4"C	20	1	1200	ELEV SUMP PUMP	8
9	SPARE		1	20						20	1		SPARE	10
11	SPARE		1	20									SPACE	12
13	SPACE												SPACE	14
15	SPACE												SPACE	16
17	SPACE												SPACE	18
19	SPACE												SPACE	20
21	SPACE												SPACE	22
23	SPACE												SPACE	24
25	SPACE												SPACE	26
27	SPACE												SPACE	28
29	SPACE												SPACE	30
31	SPACE												SPACE	32
33	SPACE												SPACE	34
35	SPACE												SPACE	36
37	SPACE												SPACE	38
39	SPACE												SPACE	40
41	SPACE												SPACE	42
						3600	2400	2400	(VA/PHASE)					
						30.0	20.0	20.0	(AMPS/PHASE)	23.3				

TOTAL CONNECTED LOAD (VA): 8400 | TOTAL CONNECTED LOAD (AMPS): 23.3
TOTAL DEMAND LOAD (VA): | TOTAL DEMAND LOAD (AMPS): -

NOTES:

100% SUBMISSION

COOPER.CARRY
ARCHITECTS · ENGINEERS · PLANNERS · INTERIOR DESIGNERS
50 WEST 17TH STREET
12TH FLOOR
NEW YORK, NY 10011
212-691-8271
WWW.COOPERCARRY.COM

NO.	DATE	DESCRIPTION

REVISIONS

THE PREPARATION OF THIS DOCUMENT HAS BEEN FINANCED IN PART THROUGH A GRANT FROM THE FEDERAL TRANSIT ADMINISTRATION, U.S. DEPARTMENT OF TRANSPORTATION, UNDER THE URBAN MASS TRANSPORTATION ACT OF 1964, AS AMENDED, FOR THE PORT AUTHORITY OF ALLEGHENY COUNTY, PENNSYLVANIA.

SIGNATURE

DMJM HARRIS | AECOM
FOUR GATEWAY CENTER
20TH FLOOR
PITTSBURGH, PA 15222

APPROVED | DATE

DESIGNED S.J.
DRAWN K.W.
CHECKED A.C.
IN CHARGE H.S.
DATE APRIL 3, 2008
SCALE 0' 8' 16'

PORT AUTHORITY OF ALLEGHENY COUNTY
PITTSBURGH PENNSYLVANIA

NORTH SHORE CONNECTOR
NORTH SIDE STATION FINISHES
PANEL SCHEDULE

Port Authority

CONTRACT NO. NSC-011
DWG. NO. NEL501 SHT.

@DATE@ @TIME@
@FILE@

D:\3499\CADD\FlatNEL501.dgn 4/2/2008 5:40:56 PM

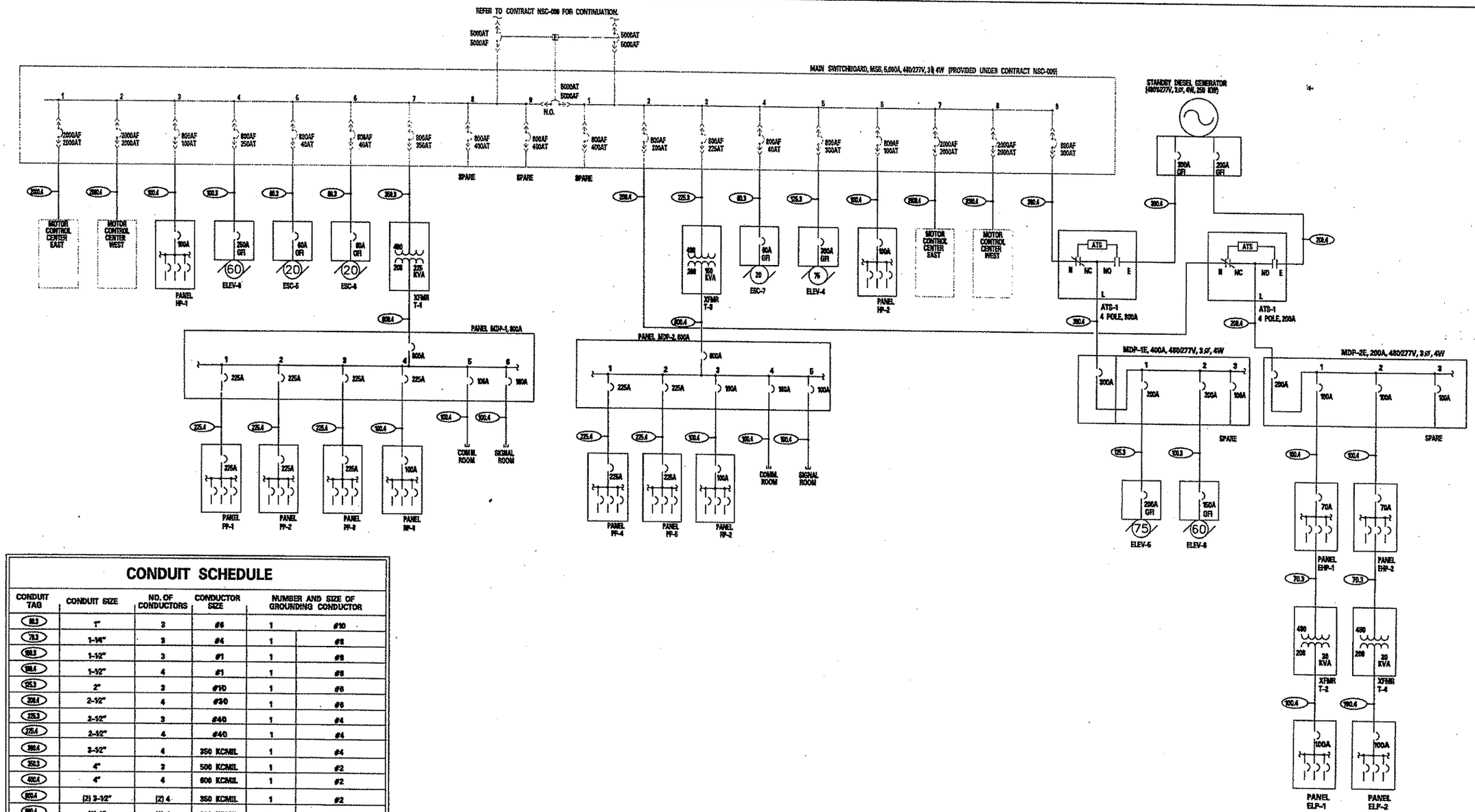

CONDUIT SCHEDULE

CONDUIT TAG	CONDUIT SIZE	NO. OF CONDUCTORS	CONDUCTOR SIZE	NUMBER AND SIZE OF GROUNDING CONDUCTOR	
80.3	1"	3	#6	1	#10
70.3	1-1/4"	3	#4	1	#8
100.3	1-1/2"	3	#1	1	#8
100.4	1-1/2"	4	#1	1	#8
125.3	2"	3	#1/0	1	#6
200.4	2-1/2"	4	#3/0	1	#6
225.3	2-1/2"	3	#4/0	1	#4
225.4	2-1/2"	4	#4/0	1	#4
300.4	2-1/2"	4	350 KCMIL	1	#4
350.3	4"	3	500 KCMIL	1	#2
400.4	4"	4	600 KCMIL	1	#2
600.4	(2) 3-1/2"	(2) 4	350 KCMIL	1	#2
800.4	(2) 4"	(2) 4	600 KCMIL	1	#1/0
2000.4	(5) 4"	(5) 4	600 KCMIL	1	250 KCMIL

NOTES:
1. ELECTRICAL CONTRACTOR TO VERIFY CORRECT FEEDER SIZES FOR ALL RUNS PRIOR TO INSTALLATION.
2. FEEDERS ARE BASED ON THHN/THWN UP TO #4/0. FEEDERS #4/0 AND ABOVE ARE BASED ON TYPE XHHW.
3. CONDUIT SIZES ARE VALID FOR EMT OR RMC. CONDUIT SIZES SHALL BE ADJUSTED AS REQUIRED FOR OTHER TYPES OF CONDUIT. ALL CONDUIT PENETRATING SLAB SHALL BE RIGID METALLIC CONDUIT.

100% SUBMISSION

COOPER CARRY
59 WEST 17TH STREET
12TH FLOOR
NEW YORK, NY 10011
212-691-9271
WWW.COOPERCARRY.COM

NO.	DATE	DESCRIPTION

REVISIONS

THE PREPARATION OF THIS DOCUMENT HAS BEEN FINANCED IN PART THROUGH A GRANT FROM THE FEDERAL TRANSIT ADMINISTRATION, U.S. DEPARTMENT OF TRANSPORTATION, UNDER THE URBAN MASS TRANSPORTATION ACT OF 1964, AS AMENDED. FOR THE PORT AUTHORITY OF ALLEGHENY COUNTY, PENNSYLVANIA.

SIGNATURE

DMJM HARRIS | AECOM
FOUR GATEWAY CENTER
20TH FLOOR
PITTSBURGH, PA 15222

APPROVED DATE

DESIGNED	S.J.
DRAWN	K.W.
CHECKED	A.C.
IN CHARGE	H.S.
DATE	APRIL 3, 2008
SCALE	

PORT AUTHORITY OF ALLEGHENY COUNTY
PITTSBURGH PENNSYLVANIA

NORTH SHORE CONNECTOR
NORTH SIDE STATION FINISHES
Single Line Diagram

Port Authority

CONTRACT NO. NSC-011

DWG. NO. NEL606 SHT.

@DATE@ @TIME@
@FILE@

GENERAL FIRE PROTECTION NOTES

1. SPRINKLER CONTRACTOR SHALL PARTICIPATE IN THE PREPARATION OF A OVERALL COORDINATED CEILING PLAN WITH THE MECHANICAL CONTRACTOR WHICH WOULD INDICATE ALL CEILING COMPONENTS SUCH AS DUCTWORK, LIGHTING FIXTURES AND ASSOCIATED SUSPENSION GRID, PLUMBING PIPING, SPRINKLER HEADS AND ASOCIATED PIPING.
2. CONTRACTOR SHALL BE RESPONSIBLE FOR FILING CONSTRUCTION DOCUMENTS CINCLUDING RISER DIAGRAM AND HYDRAULIC CALCULATIONS TO DEPARTMENT OF BUILDING. CONTRACTOR ALSO RESPONSIBLE FOR THE OBTAINING ALL PERMITS INSPECTIONS AND SIGN-OFFS.
3. ALL WORK SHALL BE ACCORDANCE WITH THE PROVISIONS OF THE ROCKEFELLER CENTER ARCHITECTURAL DESIGN CRITERIA.
4. ALL WORK IS TO BE PERFORMED IN ACCORDANCE WITH THE LATEST ISSUE OF TISHMAN SPEYER PROPERTIES STANDARD OPERATING PROCEDURES.

DESIGN CRITERIA

ENTIRE SYSTEM SHALL BE HYDRAULICALLY CALCULATED TO MEET FOLLOWING CRITERIA:

1. LIGHT HAZARD OCCUPANCY - ALL BATHRODM AREAS: DENSITY .10 GPM PER SQ. FT. OVER MOST HYDRAULICALLY REMOTE 1500 SQ. FT., MAXIMUM COVERAGE PER SPRINKLER HEAD 225 SQ. FT.
2. MINIMUM PRESSURE AT SPRINKLER HEAD 7 PSI.
3. WHENEVER ROLL GROOVED CONNECTIONS ARE USED, ALLOWANCE FOR ADDITIONAL PRESSURE LOSS AT GROOVES SHALL BE MADE AS FOLLOWS:
   A. FOR EACH COUPLING ON STRAIGHT RUN INCLUDING STRAIGHT FLOW THROUGH TEE OR CROSS: ADD 1 EQUIVALENT FOOT OF PIPE.
   B. FOR EACH COUPLING AT ELBOW, TEE OR CROSS WHERE DIRECTION OF FLOW CHANGES: ADD 2 EQUIVALENT FEET OF PIPE.
4. DISCHARGE FROM EACH SPRINKLER HEAD SHALL NOT BE LESS THAN REQUIRED FOR AREA COVERED BY THIS HEAD. AREA COVERAGE PER HEAD SHALL BE DETERMINED IN ACCORDANCE WITH NFPA STANDARD NO. 13.
5. HYDRAULIC CALCULATIONS SHALL BE BROUGHT BACK TO CONNECTION TO THE RISER.
6. CONTRACTOR SHALL BASE ALL HYDRAULIC CALCULATIONS ON AVAILABLE PRESSURE AT CONNECTION TO RISER.
7. RESULT OF HYDRAULIC CALCULATIONS SHALL INDICATE MINIMUM 5% PRESSURE SAFETY MARGIN, I.E. EXCESS OF PRESSURE AVAILABLE OVER PRESSURE REQUIRED.

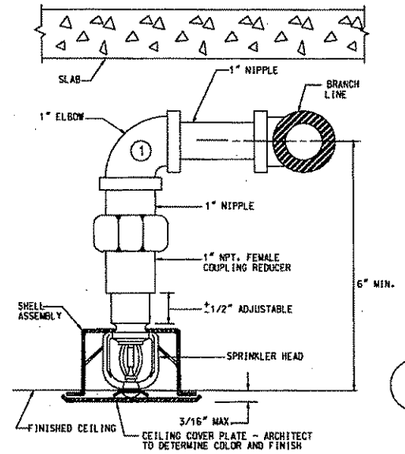

2 CONCEALED SPRINKLER HEAD BRANCHLINE CONNECTION
SCALE: NONE

DETAIL NOTES

1. UTILIZE "SWING ARM DESIGN" USING 2 ELBOWS WHERE REQUIRED TO HIT CEILING LOCATION SHOWN ON REFLECTED CEILING PLAN.

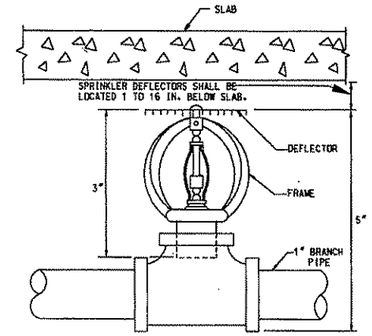

3 STANDARD UPRIGHT SPRINKLER HEAD
SCALE: NONE

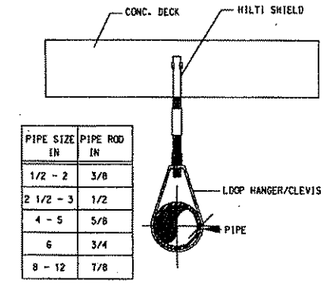

PIPE SIZE IN	PIPE ROD IN
1/2 - 2	3/8
2 1/2 - 3	1/2
4 - 5	5/8
6	3/4
8 - 12	7/8

4 HILTI SHIELD HANGER
SCALE: NONE

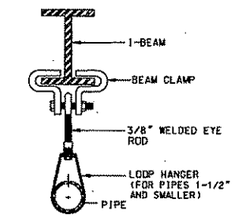

BEAM CLAMP
NO SCALE

5 HANGER DETAILS
SCALE: NONE

HYDRANT FLOW TEST DATA

(REQUIRED FOR TAPS LARGER THAN 1")

DATE OF TEST: 9-15-06 HYDRANT PERMIT NUMBER: 06-114

TEST PERFORMED BY: J&J FIRE PROTECTION

	FLOW HYDRANT	PRESSURE HYDRANT
HYDRANT NUMBER	N/A	N/A
LOCATION	*	**
STATIC PRESSURE (PSI)	XXXXXXXXXX	104
RESIDUAL PRESSURE (PSI)	XXXXXXXXXX	101.5
FLOW OBSERVED (GPM)	1376	XXXXXXXXXX

* ALONG REEDSDALE STREET WEST OF TONY DORSETT DRIVE
** ALONG REEDSDALE STREET WEST OF MAZEROSKI WAY

FIRE PROTECTION DEMANDS:

SPRINKLER SYSTEM PEAK DEMAND 714 GPM 24 PSI
INSIDE HOSE DEMAND 0 GPM
OUTSIDE HOSE DEMAND 0 GPM
DOMESTIC SYSTEM PEAK DEMAND 61 GPM

WATER FLOW DATA	
WATER CONSUMPTION	850 GPD
APPLICATION NUMBER	06103.61
PADEP APPROVAL DATE	2-22-2007

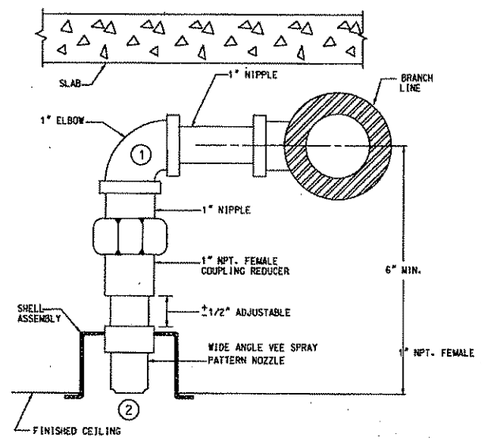

6 DELUGE SPRINKLER HEAD CONNECTION
SCALE: NONE

DETAIL NOTES

1. UTILIZE "SWING ARM DESIGN" USING 2 ELBOWS WHERE REQUIRED TO LOCATE SPRINKLER AS SHOWN ON REFLECTED CEILING PLAN.
2. TIP OF NOZZLE TO BE FLUSH WITH FINISHED CEILING.

FIRE PROTECTION NOTES CONT.

THE ENTIRE STRUCTURE SHALL BE PROTECTED BY A DRY PIPE SYSTEM. TWO STANDPIPES WILL BE LOCATED AS SHOWN ON THE DRAWINGS WITH FIRE HOSE CONNECTIONS AT FLOORS AS INDICATED. TWO FIRE DEPARTMENT SIAMESE CONNECTIONS WILL BE HEADERED TO THESE RISERS SUCH THAT CONNECTION TO EITHER SIAMESE CONNECTION WILL FEED BOTH RISERS.

THE FIRE PROTECTION SYSTEM FOR THIS BUILDING SHALL CONFORM TO THE LATEST REQUIREMENTS OF THE LOCAL WATER AUTHORITY, NFPA 14, FACTORY MUTUAL, UNDERWRITERS LABORATORY, BOCA CODES, STATE AND LOCAL CODES, AND THE STATE AND LOCAL AUTHORITY HAVING JURISDICTION.

INSTALL STANDPIPES AND SPRINKLER PIPING ACCORDING TO NFPA 13 AND LOCAL CODES TO PROTECT PIPING FROM EARTHQUAKE DAMAGE.

PRIOR TO BID, THE CONTRACTOR SHALL EXAMINE PROJECT CONTRACT DOCUMENTS TO DEVELOP A COMPLETE UNDERSTANDING OF THE PROJECT SCOPE. FAILURE TO REVIEW THE CONTRACT DOCUMENTS SHALL NOT RELIEVE THE CONTRACTOR OF HIS RESPONSIBILITIES TO PERFORM ALL WORK REQUIRED. CONTRACTOR SHALL, UPON REVIEW OF THE CONTRACT DOCUMENTS, ADVISE THE ARCHITECT OF ANY DISCREPANCIES WHICH WILL AFFECT THE WORK REQUIRED.

FIRE PIPING RISERS SHALL BE RUN AS SHOWN ON DRAWINGS. FIRE PIPING HEADERS SHALL BE RUN AS CLOSE TO CEILING AS POSSIBLE AND AWAY FROM PRIMARY TRAFFIC AREAS.

PATCH ALL OPENINGS IN BUILDING CONSTRUCTION WHERE PIPING, ETC. IS INSTALLED. MATERIAL AND FINISH TO MATCH EXISTING SURROUNDING CONSTRUCTION TO THE EXTENT POSSIBLE.

ALL PIPE OR SIMILAR THROUGH-PENETRATIONS OF ALL FIRE AND SMOKE RATED WALLS, FLOORS, OR CEILING ASSEMBLIES SHALL BE PATCHED WITH A FIRE-STOPPING SYSTEM TO ACHIEVE A TIGHT SEAL THAT WILL MAINTAIN THE FIRE RESISTANCE RATING OF THE ASSEMBLY CONTAINING THE THROUGH-PENETRATION.

NO FIRE PIPING SHALL BE LOCATED ABOVE ANY ELECTRICAL OR VOICE/DATA EQUIPMENT. FIRE PROTECTION CONTRACTOR SHALL COORDINATE HOSE CONNECTION AND PIPING LOCATIONS WITH ELECTRICAL AND VOICE/DATA.

FIRE PROTECTION NOTES CONT.

THE CONTRACTOR SHALL BE RESPONSIBLE FOR HYDRAULICALLY CALCULATING AND SIZING ALL PIPING SO THAT THE SYSTEM PERFORMS ACCORDING TO LISTED STANDARDS.

THE CONTRACTOR SHALL BE RESPONSIBLE FOR COORDINATION OF HIS WORK WITH THAT OF THE OTHER CONTRACTORS, SO THAT THE WORK OF ALL TRADES WILL BE PERFORMED IN AN ORDERLY MANNER AND WITH THE LEAST POSSIBLE INTERFERENCE.

SHOP DRAWINGS AND HYDRAULIC CALCULATIONS SHALL BE SUBMITTED TO THE OWNER'S INSURANCE COMPANY AND THE AUTHORITY HAVING JURISDICTION. THE APPROVAL OF BOTH OF THESE AGENCIES SHALL BE RECEIVED BEFORE SHOP DRAWINGS AND CALCULATIONS ARE SUBMITTED TO THE ENGINEER. SHOP DRAWINGS SHALL NOT BE ISSUED FOR CONSTRUCTION PRIOR TO RECEIVING APPROVAL FROM OWNER'S INSURANCE COMPANY AND THE AUTHORITY HAVING JURISDICTION.

STAND PIPES AND HOSE CONNECTIONS SHALL BE PROVIDED IN STAIR WELLS AS SHOWN ON DRAWINGS. STAND PIPES SHALL HAVE ISOLATION VALVES AND HOSE CONNECTIONS. HOSE CONNECTION TYPES AND THREADS SHALL BE APPROVED BY THE LOCAL FIRE MARSHALL.

THE INSTALLATION SHALL BE TESTED IN ACCORDANCE WITH THE APPROPRIATE NFPA REQUIREMENTS.

FURNISH OPERATIONAL AND MAINTENANCE INSTRUCTIONS TO THE ENGINEER FOR REVIEW BEFORE ANY PART OF THE SYSTEM IS TURNED OVER TO THE OWNER.

PROVIDE TRAINING TO OWNER'S MAINTENANCE STAFF AFTER SYSTEM IS TESTED AND OPERATIONAL. SCHEDULE TRAINING AT LEAST ONE WEEK IN ADVANCE.

WASTE MATERIALS, DEBRIS, AND RUBBISH SHALL BE REMOVED FROM THE JOB SITE AND LEGALLY DISPOSED OF IN ACCORDANCE WITH ALL APPLICABLE REGULATIONS. CONTRACTOR SHALL THOROUGHLY CLEANUP WORK AREAS AFTER WORK IS COMPLETE.

100% SUBMISSION

COOPER CARY
58 WEST 17TH STREET
12TH FLOOR
NEW YORK, NY 10011
212-691-0221
WWW.COOPERCARRY.COM

NO.	DATE	DESCRIPTION

REVISIONS

THE PREPARATION OF THIS DOCUMENT HAS BEEN FINANCED IN PART THROUGH A GRANT FROM THE FEDERAL TRANSIT ADMINISTRATION, U.S. DEPARTMENT OF TRANSPORTATION, UNDER THE URBAN MASS TRANSPORTATION ACT OF 1964, AS AMENDED, FOR THE PORT AUTHORITY OF ALLEGHENY COUNTY, PENNSYLVANIA.

SIGNATURE

DMJM HARRIS | AECOM
FOUR GATEWAY CENTER
20TH FLOOR
PITTSBURGH, PA 15222

APPROVED DATE

DESIGNED	DRL
DRAWN	KDR
CHECKED	JAA
IN CHARGE	JAA
DATE	APR. 3. 2008
SCALE	

PORT AUTHORITY OF ALLEGHENY COUNTY
PITTSBURGH PENNSYLVANIA

NORTH SHORE CONNECTOR
NORTH SIDE STATION - FIRE PROTECTION
GENERAL INFORMATION

Port Authority

CONTRACT NO. NSC-011
DWG. NO. NFP001 SHT.

4/14/2008 7:44:4 AM
Q:\3495\CAD\Plumbing-Fire\Working Drawings\NFP001.dgn

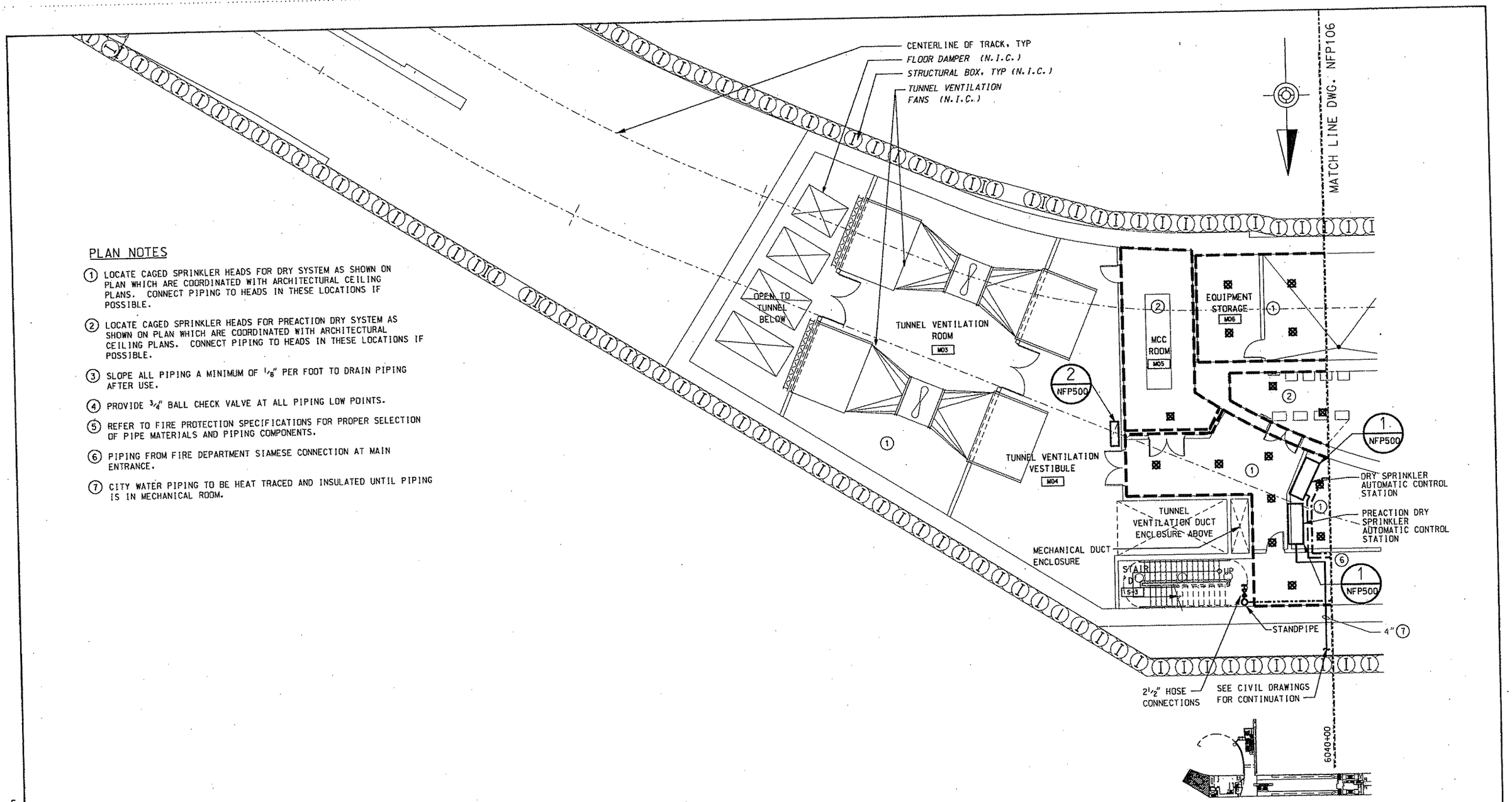

PLAN NOTES

1. LOCATE CAGED SPRINKLER HEADS FOR DRY SYSTEM AS SHOWN ON PLAN WHICH ARE COORDINATED WITH ARCHITECTURAL CEILING PLANS. CONNECT PIPING TO HEADS IN THESE LOCATIONS IF POSSIBLE.
2. LOCATE CAGED SPRINKLER HEADS FOR PREACTION DRY SYSTEM AS SHOWN ON PLAN WHICH ARE COORDINATED WITH ARCHITECTURAL CEILING PLANS. CONNECT PIPING TO HEADS IN THESE LOCATIONS IF POSSIBLE.
3. SLOPE ALL PIPING A MINIMUM OF 1/8" PER FOOT TO DRAIN PIPING AFTER USE.
4. PROVIDE 3/4" BALL CHECK VALVE AT ALL PIPING LOW POINTS.
5. REFER TO FIRE PROTECTION SPECIFICATIONS FOR PROPER SELECTION OF PIPE MATERIALS AND PIPING COMPONENTS.
6. PIPING FROM FIRE DEPARTMENT SIAMESE CONNECTION AT MAIN ENTRANCE.
7. CITY WATER PIPING TO BE HEAT TRACED AND INSULATED UNTIL PIPING IS IN MECHANICAL ROOM.

100% SUBMISSION

COOPER CARRY
50 WEST 17TH STREET
12TH FLOOR
NEW YORK, NY 10011
212-691-8271
WWW.COOPERCARRY.COM

NO.	DATE	DESCRIPTION

REVISIONS

THE PREPARATION OF THIS DOCUMENT HAS BEEN FINANCED IN PART THROUGH A GRANT FROM THE FEDERAL TRANSIT ADMINISTRATION, U.S. DEPARTMENT OF TRANSPORTATION, UNDER THE URBAN MASS TRANSPORTATION ACT OF 1964, AS AMENDED, FOR THE PORT AUTHORITY OF ALLEGHENY COUNTY, PENNSYLVANIA.

SIGNATURE

DMJM HARRIS | AECOM
FOUR GATEWAY CENTER
20TH FLOOR
PITTSBURGH, PA 15222

APPROVED DATE

DESIGNED	DRL
DRAWN	KDR
CHECKED	JAA
IN CHARGE	JAA
DATE	APR. 3, 2008
SCALE	0' 4' 8' 16'

PORT AUTHORITY OF ALLEGHENY COUNTY
PITTSBURGH PENNSYLVANIA

NORTH SHORE CONNECTOR
NORTH SIDE STATION - FIRE PROTECTION
PARTIAL CONCOURSE LEVEL
PLAN A

Port Authority

CONTRACT NO. NSC-011
DWG. NO. NFP105
SHT.

4/14/2008 7:48:28 AM
Q:\3499\CAD\Plumbing-Fire\Working Drawings\NFP105.dgn

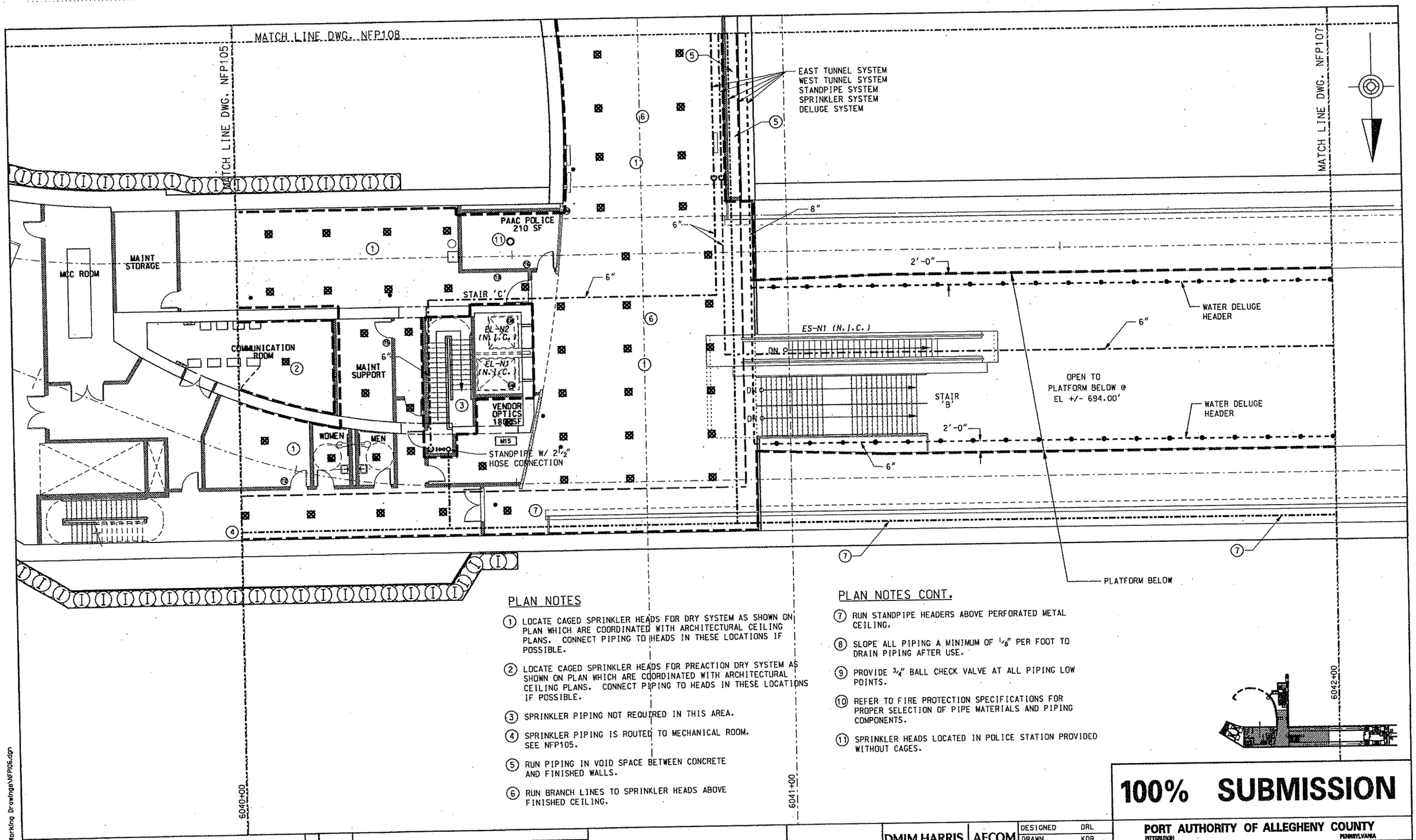

PLAN NOTES

1. LOCATE CAGED SPRINKLER HEADS FOR DRY SYSTEM AS SHOWN ON PLAN WHICH ARE COORDINATED WITH ARCHITECTURAL CEILING PLANS. CONNECT PIPING TO HEADS IN THESE LOCATIONS IF POSSIBLE.
2. LOCATE CAGED SPRINKLER HEADS FOR PREACTION DRY SYSTEM AS SHOWN ON PLAN WHICH ARE COORDINATED WITH ARCHITECTURAL CEILING PLANS. CONNECT PIPING TO HEADS IN THESE LOCATIONS IF POSSIBLE.
3. SPRINKLER PIPING NOT REQUIRED IN THIS AREA.
4. SPRINKLER PIPING IS ROUTED TO MECHANICAL ROOM. SEE NFP105.
5. RUN PIPING IN VOID SPACE BETWEEN CONCRETE AND FINISHED WALLS.
6. RUN BRANCH LINES TO SPRINKLER HEADS ABOVE FINISHED CEILING.

PLAN NOTES CONT.

7. RUN STANDPIPE HEADERS ABOVE PERFORATED METAL CEILING.
8. SLOPE ALL PIPING A MINIMUM OF 1/8" PER FOOT TO DRAIN PIPING AFTER USE.
9. PROVIDE 3/4" BALL CHECK VALVE AT ALL PIPING LOW POINTS.
10. REFER TO FIRE PROTECTION SPECIFICATIONS FOR PROPER SELECTION OF PIPE MATERIALS AND PIPING COMPONENTS.
11. SPRINKLER HEADS LOCATED IN POLICE STATION PROVIDED WITHOUT CAGES.

100% SUBMISSION

COOPER CARRY
50 WEST 17TH STREET
12TH FLOOR
NEW YORK, NY 10011
212-691-0271
WWW.COOPERCARRY.COM

NO.	DATE	DESCRIPTION

REVISIONS

THE PREPARATION OF THIS DOCUMENT HAS BEEN FINANCED IN PART THROUGH A GRANT FROM THE FEDERAL TRANSIT ADMINISTRATION, U.S. DEPARTMENT OF TRANSPORTATION, UNDER THE URBAN MASS TRANSPORTATION ACT OF 1964, AS AMENDED, FOR THE PORT AUTHORITY OF ALLEGHENY COUNTY, PENNSYLVANIA.

SIGNATURE

DMJM HARRIS | AECOM
FOUR GATEWAY CENTER
20TH FLOOR
PITTSBURGH, PA 15222

APPROVED DATE

DESIGNED	DRL
DRAWN	KDR
CHECKED	JAA
IN CHARGE	JAA
DATE	APR. 3, 2008
SCALE	0' 4' 8' 16'

PORT AUTHORITY OF ALLEGHENY COUNTY
PITTSBURGH PENNSYLVANIA

NORTH SHORE CONNECTOR
NORTH SIDE STATION – FIRE PROTECTION
PARTIAL CONCOURSE LEVEL
PLAN B

Port Authority

CONTRACT NO. NSC-011

DWG. NO. NFP106 SHT.

4/14/2008 7:49:01 AM
Q:\3499\CAD\Plumbing-Fire\Marking Drawings\NFP106.dgn

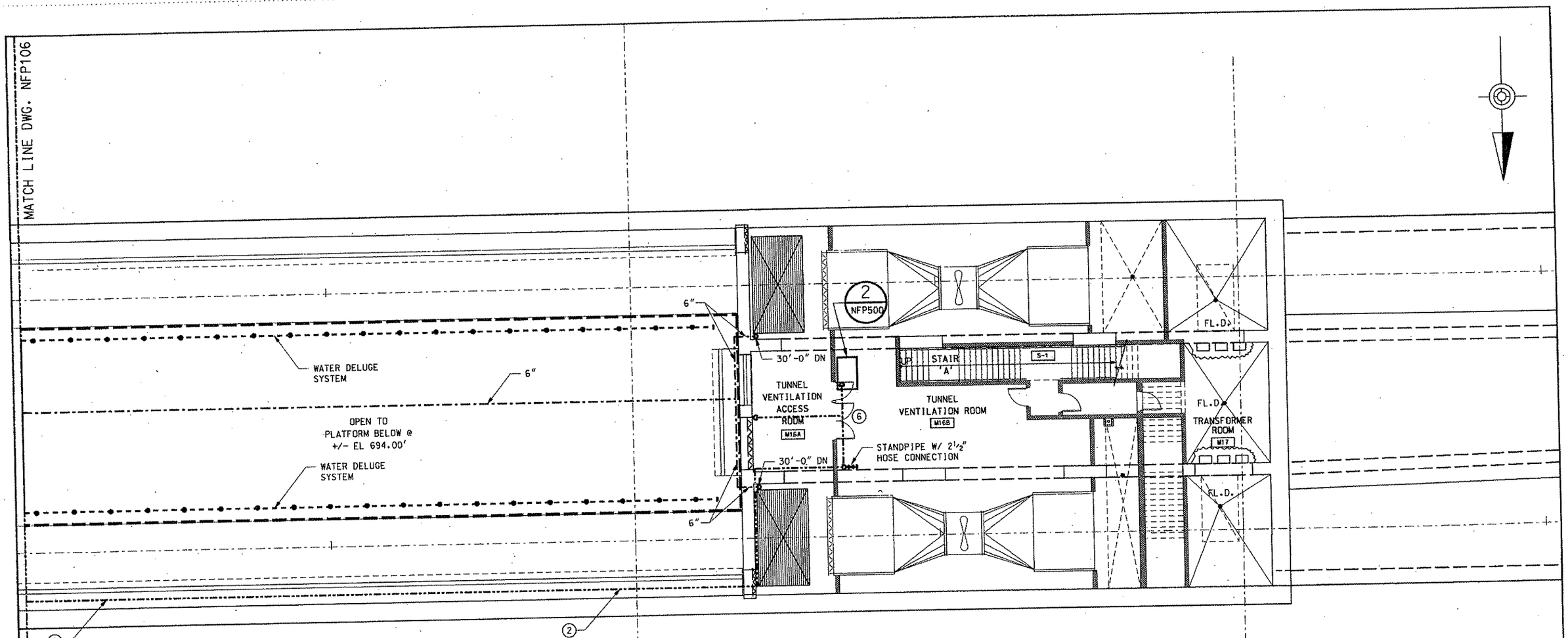

PLAN NOTES

1. LOCATE CAGED SPRINKLER HEADS FOR DRY SYSTEM AS SHOWN ON PLAN WHICH ARE COORDINATED WITH ARCHITECTURAL CEILING PLANS. CONNECT PIPING TO HEADS IN THESE LOCATIONS IF POSSIBLE.
2. RUN STANDPIPE HEADERS ABOVE PERFORATED METAL CEILING.
3. SLOPE ALL PIPING A MINIMUM OF 1/8" PER FOOT TO DRAIN PIPING AFTER USE.
4. PROVIDE 3/4" BALL CHECK VALVE AT ALL PIPING LOW POINTS.
5. REFER TO FIRE PROTECTION SPECIFICATIONS FOR PROPER SELECTION OF PIPE MATERIALS AND PIPING COMPONENTS.
6. CONNECT HOSE CABINET PIPING TO STANDPIPE HEADER.

6042+00

6043+00

6044+00

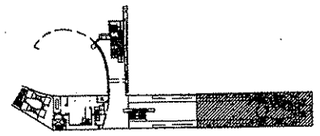

100% SUBMISSION

COOPER CARRY
50 WEST 17TH STREET
12TH FLOOR
NEW YORK, NY 10011
212-691-8271
WWW.COOPERCARRY.COM

NO.	DATE	DESCRIPTION

REVISIONS

THE PREPARATION OF THIS DOCUMENT HAS BEEN FINANCED IN PART THROUGH A GRANT FROM THE FEDERAL TRANSIT ADMINISTRATION, U.S. DEPARTMENT OF TRANSPORTATION, UNDER THE URBAN MASS TRANSPORTATION ACT OF 1964, AS AMENDED, FOR THE PORT AUTHORITY OF ALLEGHENY COUNTY, PENNSYLVANIA.

SIGNATURE

DMJM HARRIS | AECOM
FOUR GATEWAY CENTER
20TH FLOOR
PITTSBURGH, PA 15222

APPROVED DATE

DESIGNED	DRL
DRAWN	KDR
CHECKED	JAA
IN CHARGE	JAA
DATE	APR. 3, 2008
SCALE	0' 4' 8' 16'

PORT AUTHORITY OF ALLEGHENY COUNTY
PITTSBURGH PENNSYLVANIA

NORTH SHORE CONNECTOR
NORTH SIDE STATION - FIRE PROTECTION
PARTIAL CONCOURSE LEVEL
PLAN C

Port Authority

CONTRACT NO. NSC-011

DWG. NO. NFP107 SHT.

4/14/2008 7:49:48 AM
Q:\3499\CAD\Plumbing-Fire\Working Drawings\NFP107.dgn

PLAN NOTES

1. LOCATE CAGED SPRINKLER HEADS FOR DRY SYSTEM AS SHOWN ON PLAN WHICH ARE COORDINATED WITH ARCHITECTURAL CEILING PLANS. CONNECT PIPING TO HEADS IN THESE LOCATIONS IF POSSIBLE.
2. RUN PIPING HEADERS IN VOID SPACE BETWEEN CONCRETE AND FINISHED WALLS.
3. RUN BRANCH LINES TO SPRINKLER HEADS ABOVE FINISHED CEILING.
4. SLOPE ALL PIPING A MINIMUM OF 1/8" PER FOOT TO DRAIN PIPING AFTER USE.
5. PROVIDE 3/4" BALL CHECK VALVE AT ALL PIPING LOW POINTS.
6. REFER TO FIRE PROTECTION SPECIFICATIONS FOR PROPER SELECTION OF PIPE MATERIALS AND PIPING COMPONENTS.

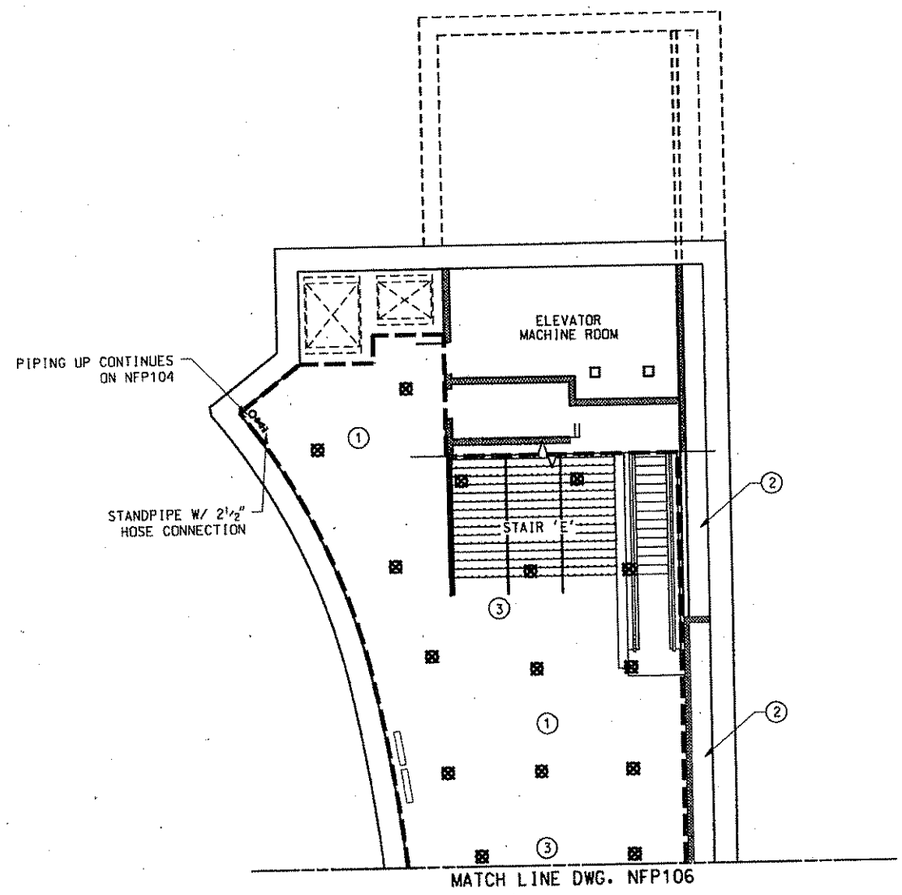

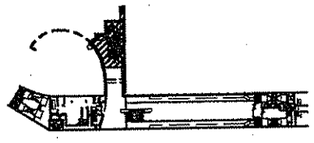

100% SUBMISSION

PORT AUTHORITY OF ALLEGHENY COUNTY
PITTSBURGH PENNSYLVANIA

NORTH SHORE CONNECTOR
NORTH SIDE STATION - FIRE PROTECTION
PARTIAL CONCOURSE LEVEL
PLAN D

Port Authority

CONTRACT NO. NSC-011
DWG. NO. NFP108 SHT.

DESIGNED	DRL
DRAWN	KDR
CHECKED	JAA
IN CHARGE	JAA
DATE	APR. 3, 2008
SCALE	0' 8' 16'

DMJM HARRIS | AECOM
FOUR GATEWAY CENTER
20TH FLOOR
PITTSBURGH, PA 15222

APPROVED DATE

SIGNATURE

THE PREPARATION OF THIS DOCUMENT HAS BEEN FINANCED IN PART THROUGH A GRANT FROM THE FEDERAL TRANSIT ADMINISTRATION, U.S. DEPARTMENT OF TRANSPORTATION, UNDER THE URBAN MASS TRANSPORTATION ACT OF 1964, AS AMENDED, FOR THE PORT AUTHORITY OF ALLEGHENY COUNTY, PENNSYLVANIA.

NO.	DATE	DESCRIPTION

REVISIONS

COOPER CARRY
58 WEST 17TH STREET
12TH FLOOR
NEW YORK, NY 10011
212-691-8271
WWW.COOPERCARRY.COM

4/14/2008 7:50:22 AM
Q:\3499\CAD\Plumbing-Fire\Working Drawings\NFP108.dgn

PLAN NOTES

1. LOCATE CAGED SPRINKLER HEADS FOR DRY TUNNEL SYSTEM AS SHOWN ON PLAN WHICH ARE COORDINATED WITH ARCHITECTURAL CEILING PLANS. CONNECT PIPING TO HEADS IN THESE LOCATIONS IF POSSIBLE.
2. LOCATE CAGED SPRINKLER HEADS FOR PREACTION DRY SYSTEM AS SHOWN ON PLAN WHICH ARE COORDINATED WITH ARCHITECTURAL CEILING PLANS. CONNECT PIPING TO HEADS IN THESE LOCATIONS IF POSSIBLE.
3. THIS AREA OPEN TO CEILING AT CONCOURSE LEVEL.
4. SLOPE ALL PIPING A MINIMUM OF 1/8" PER FOOT TO DRAIN PIPING AFTER USE.

PLAN NOTES CONTINUED

5. PROVIDE 3/4" BALL CHECK VALVE AT ALL PIPING LOW POINTS.
6. REFER TO FIRE PROTECTION SPECIFICATIONS FOR PROPER SELECTION OF PIPE MATERIALS AND PIPING COMPONENTS.
7. SPRINKLER PIPING NOT REQUIRED IN THIS AREA.

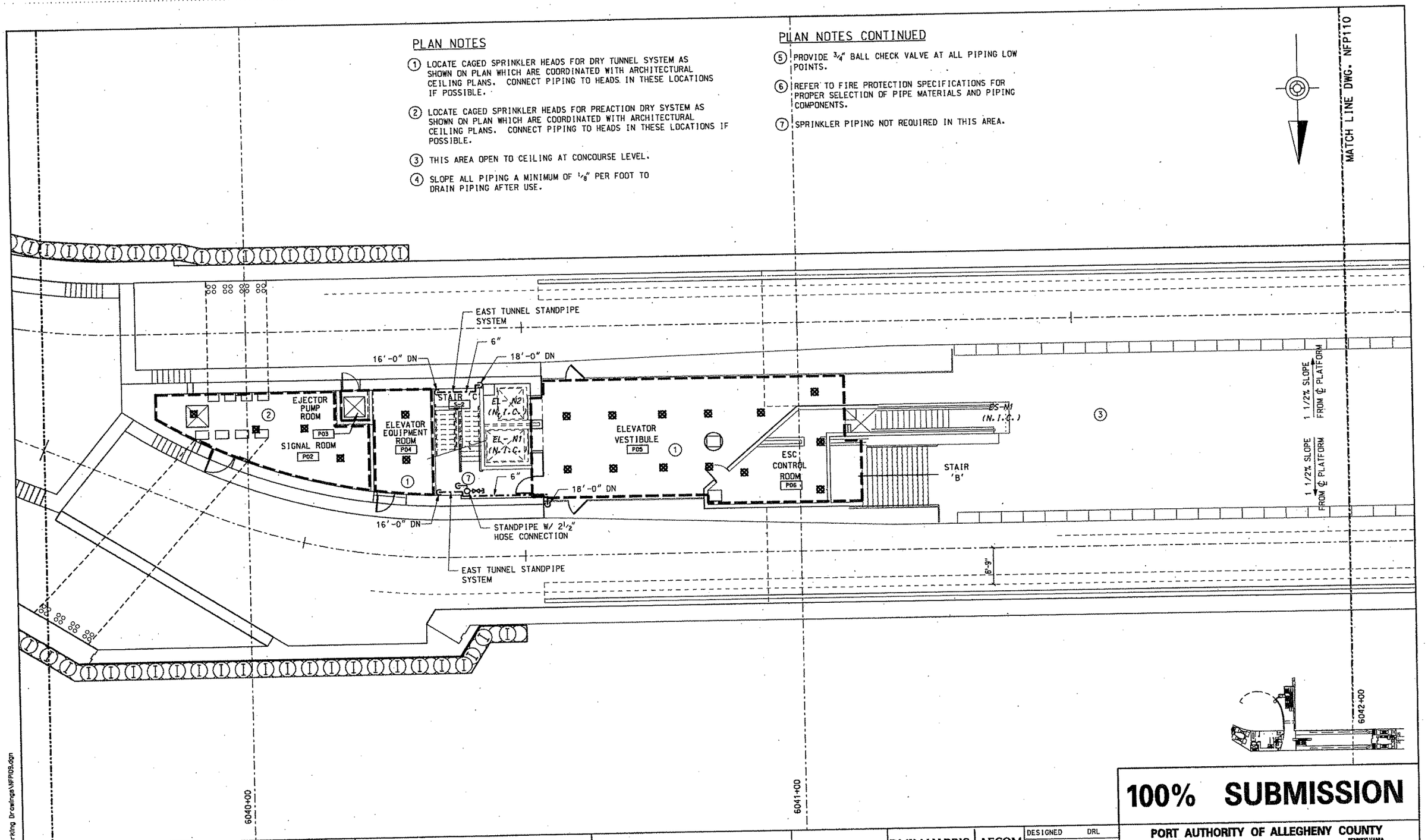

100% SUBMISSION

PORT AUTHORITY OF ALLEGHENY COUNTY
PITTSBURGH PENNSYLVANIA

NORTH SHORE CONNECTOR
NORTH SIDE STATION - FIRE PROTECTION
PARTIAL PLATFORM LEVEL
PLAN B

Port Authority

CONTRACT NO. NSC-011
DWG. NO. NFP109
SHT.

DESIGNED	DRL
DRAWN	KDR
CHECKED	JAA
IN CHARGE	JAA
DATE	APR. 3, 2008
SCALE	0' 4' 8' 16'

DMJM HARRIS | AECOM
FOUR GATEWAY CENTER
20TH FLOOR
PITTSBURGH, PA 15222

APPROVED DATE

SIGNATURE

THE PREPARATION OF THIS DOCUMENT HAS BEEN FINANCED IN PART THROUGH A GRANT FROM THE FEDERAL TRANSIT ADMINISTRATION, U.S. DEPARTMENT OF TRANSPORTATION, UNDER THE URBAN MASS TRANSPORTATION ACT OF 1964, AS AMENDED, FOR THE PORT AUTHORITY OF ALLEGHENY COUNTY, PENNSYLVANIA.

NO.	DATE	DESCRIPTION

REVISIONS

COOPER CARRY
59 WEST 17TH STREET
12TH FLOOR
NEW YORK, NY 10011
212-691-8271
WWW.COOPERCARRY.COM

4/14/2008 7:50:55 AM
Q:\3499\CAD\Plumbing-Fire\Working Drawings\NFP109.dgn

PLAN NOTES

1. LOCATE CAGED SPRINKLER HEADS FOR PREACTION DRY SYSTEM AS SHOWN ON PLAN WHICH ARE COORDINATED WITH ARCHITECTURAL CEILING PLANS. CONNECT PIPING TO HEADS IN THESE LOCATIONS IF POSSIBLE.
2. THIS AREA OPEN TO CEILING AT CONCOURSE LEVEL.
3. SLOPE ALL PIPING A MINIMUM OF 1/8" PER FOOT TO DRAIN PIPING AFTER USE.
4. PROVIDE 3/4" BALL CHECK VALVE AT ALL PIPING LOW POINTS.
5. REFER TO FIRE PROTECTION SPECIFICATIONS FOR PROPER SELECTION OF PIPE MATERIALS AND PIPING COMPONENTS.

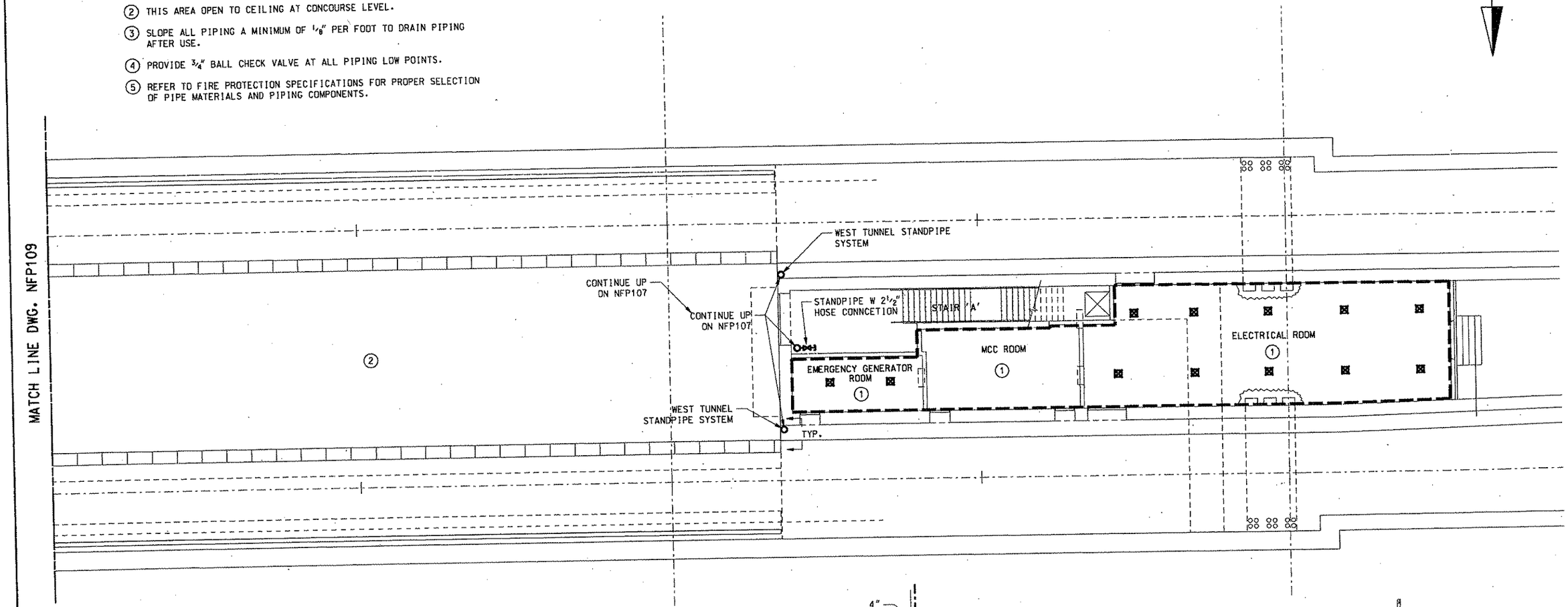

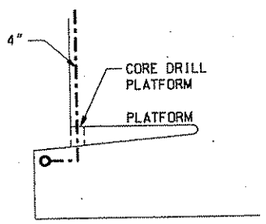

TYPICAL SECTION
N.T.S.

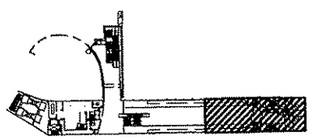

100% SUBMISSION

PORT AUTHORITY OF ALLEGHENY COUNTY
PITTSBURGH PENNSYLVANIA

NORTH SHORE CONNECTOR
NORTH SIDE STATION - FIRE PROTECTION
PARTIAL PLATFORM LEVEL
PLAN C

Port Authority

CONTRACT NO. NSC-011
DWG. NO. NFP110
SHT.

DESIGNED	DRL
DRAWN	KDR
CHECKED	JAA
IN CHARGE	JAA
DATE	APR. 3, 2008
SCALE	0' 8' 16'

DMJM HARRIS | AECOM
FOUR GATEWAY CENTER
20TH FLOOR
PITTSBURGH, PA 15222

APPROVED DATE

SIGNATURE

THE PREPARATION OF THIS DOCUMENT HAS BEEN FINANCED IN PART THROUGH A GRANT FROM THE FEDERAL TRANSIT ADMINISTRATION, U.S. DEPARTMENT OF TRANSPORTATION, UNDER THE URBAN MASS TRANSPORTATION ACT OF 1964, AS AMENDED, FOR THE PORT AUTHORITY OF ALLEGHENY COUNTY, PENNSYLVANIA.

NO.	DATE	DESCRIPTION

REVISIONS

COOPER CARRY
50 WEST 17TH STREET
12TH FLOOR
NEW YORK, NY 10011
212-691-0271
WWW.COOPERCARRY.COM

4/14/2008 7:51:23 AM
Q:\3499\CAD\Plumbing-Fire\Working Drawings\NFP110.dgn

KEYNOTES

(A) (2) 3" SLEEVES FOR 2" CONDUIT TO RADIO ANTENNA @ 8'-0" AFF.

(B) 1" SLEEVE THRU WALL FOR LEAKY COAXIAL CABLE @ 8'-0" AFF.

(C) 8" X 15" WIDE OPENING @ 8'-0" A.F.F. W/ 1/4"X6"X24" STL. PLATE LINTEL

GENERAL NOTES

1. SEE SITE DRAWINGS FOR WALL LAYOUT IN THIS AREA.
2. SEE EL009 FOR ELECTRICAL EQUIPMENT.
3. SEE AR800 FOR FOR WALL TYPES.
4. SEE AR800A FOR DOOR AND FINISH SCHEDULE.

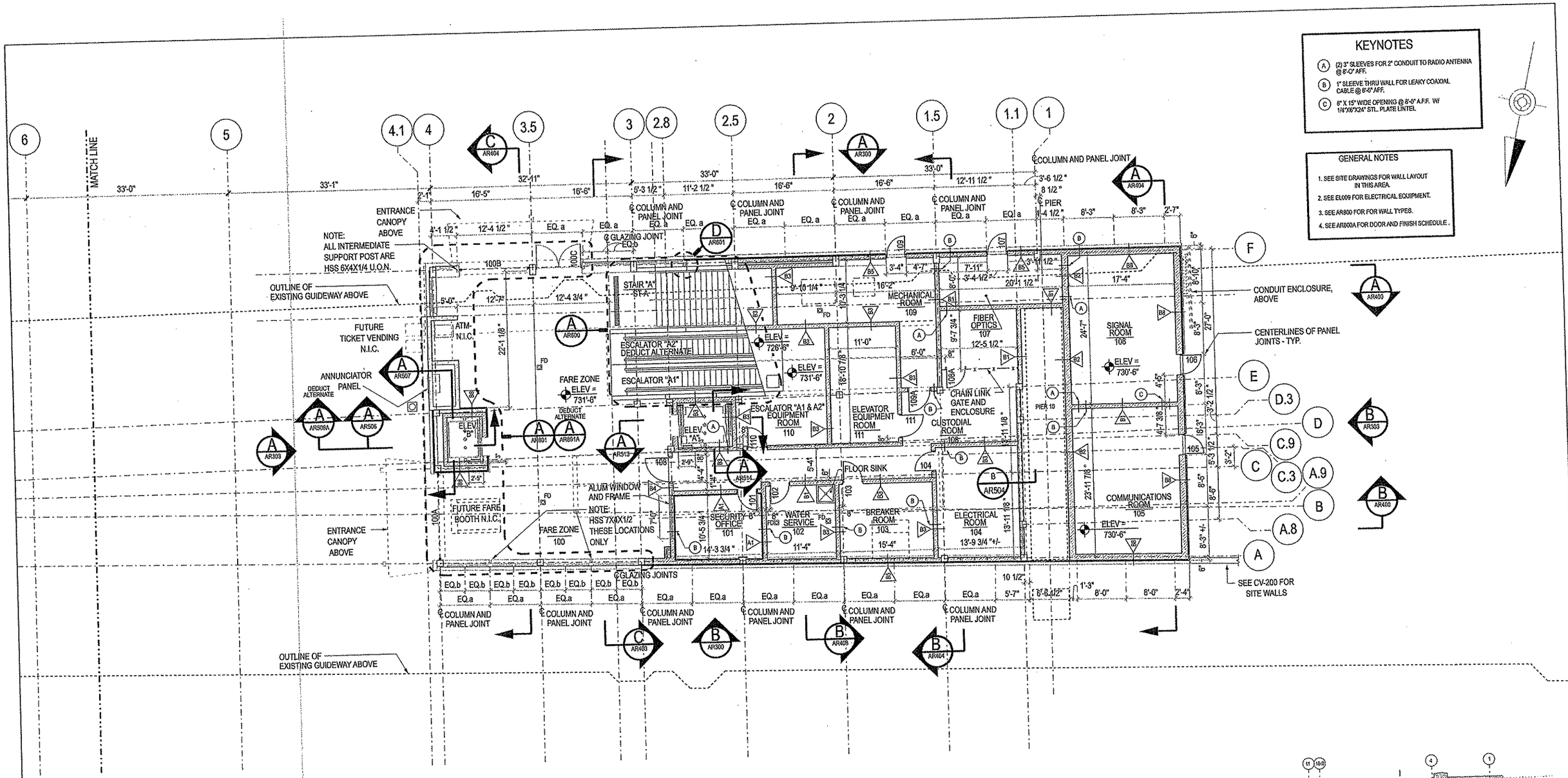

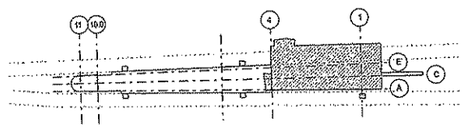

KEY PLAN

BURT, HILL

650 Smithfield Street Suite 2600 Pittsburgh PA 15222
tel: 412.394.7000 fax: 412.394.7880 www.burthill.com
©2006 Burt Hill

NO.	DATE	DESCRIPTION

REVISIONS

THE PREPARATION OF THIS DRAWING HAS BEEN FINANCED, IN PART, THROUGH A GRANT FROM THE U. S. DEPARTMENT OF TRANSPORTATION, FEDERAL TRANSIT ADMINISTRATION UNDER THE URBAN MASS TRANSPORTATION ACT OF 1964, AS AMENDED.

REGISTERED ARCHITECT PENNSYLVANIA

SIGNATURE

DMJM HARRIS | AECOM
FOUR GATEWAY CENTER
20TH FLOOR
PITTSBURGH, PA. 15222

APPROVED — DATE 04/04/08

DESIGNED	REG
DRAWN	REG
CHECKED	JCG
IN CHARGE	SA
DATE	4/04/08
SCALE	0 2' 4' 8' 12'

PORT AUTHORITY OF ALLEGHENY COUNTY
PITTSBURGH PENNSYLVANIA

NORTH SHORE CONNECTOR

ALLEGHENY STATION

PARTIAL STREET LEVEL CONSTRUCTION PLAN - WEST

Port Authority

CONTRACT NO. NSC-012-G
DWG. NO. AR102 SHT. 037

4/15/2008 12:10:22 PM
N:\06062007 CADD\Sheet - Architecture\NSS\AR102.DGN

GENERAL NOTES

1. SEE EL009 FOR ELECTRICAL EQUIPMENT.
2. SEE AR600 FOR FOR WALL TYPES.
3. SEE AR600A FOR DOOR AND FINISH SCHEDULE.

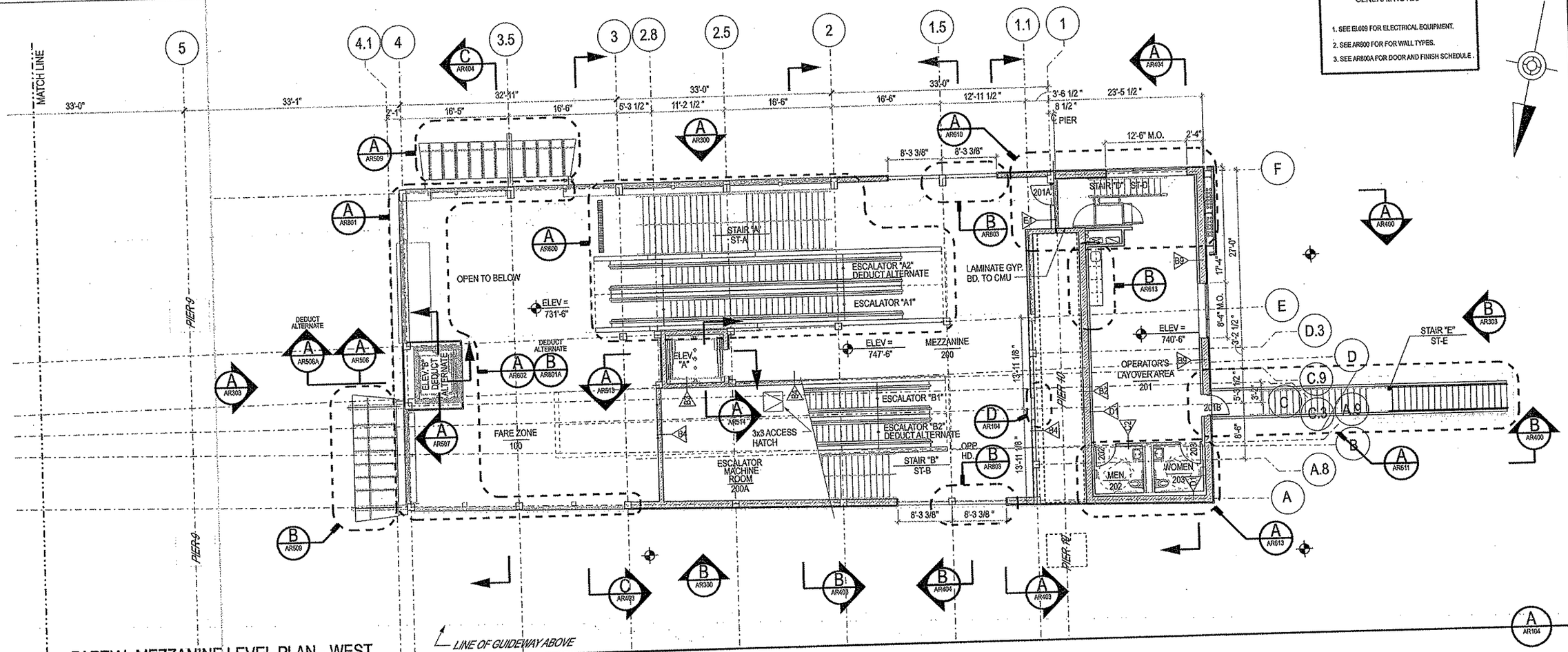

PARTIAL MEZZANINE LEVEL PLAN - WEST

0 2' 4' 8' 12'

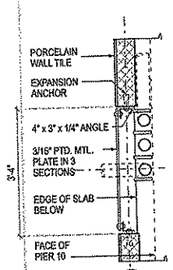

SPRINKLER PIPE CHASE COVER

D

0 6" 1' 2' 3'

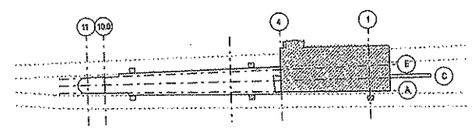

KEY PLAN

BURT, HILL

650 Smithfield Street Suite 2600 Pittsburgh PA 15222
tel: 412.394.7000 fax: 412.394.7880 www.burthill.com
©2006 Burt Hill

NO.	DATE	DESCRIPTION

REVISIONS

THE PREPARATION OF THIS DRAWING HAS BEEN FINANCED, IN PART, THROUGH A GRANT FROM THE U. S. DEPARTMENT OF TRANSPORTATION, FEDERAL TRANSIT ADMINISTRATION UNDER THE URBAN MASS TRANSPORTATION ACT OF 1964, AS AMENDED.

REGISTERED ARCHITECT PENNSYLVANIA

SIGNATURE

DMJM HARRIS | AECOM
FOUR GATEWAY CENTER
20TH FLOOR
PITTSBURGH, PA. 15222

APPROVED — DATE 04/04/08

DESIGNED	REG
DRAWN	REG
CHECKED	JCG
IN CHARGE	SA
DATE	4/04/08
SCALE	AS NOTED

PORT AUTHORITY OF ALLEGHENY COUNTY
PITTSBURGH PENNSYLVANIA

NORTH SHORE CONNECTOR
ALLEGHENY STATION
PARTIAL MEZZANINE LEVEL CONSTRUCTION PLAN - WEST

Port Authority

CONTRACT NO. NSC-012-G
DWG. NO. AR104 SHT. 039

4/15/2008 9:53:33 AM
N:\90602007 CAD\DSheet - Architecture\NSAR104.DGN

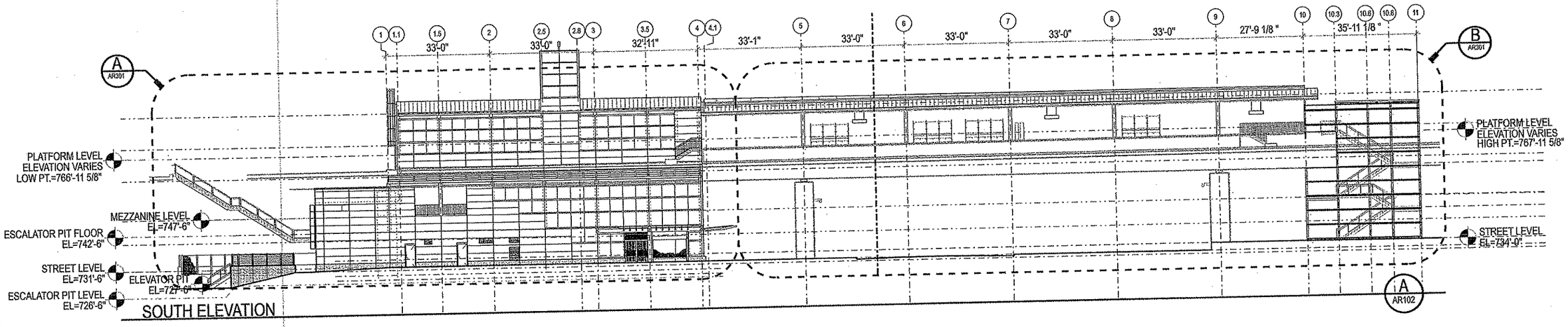

SOUTH ELEVATION

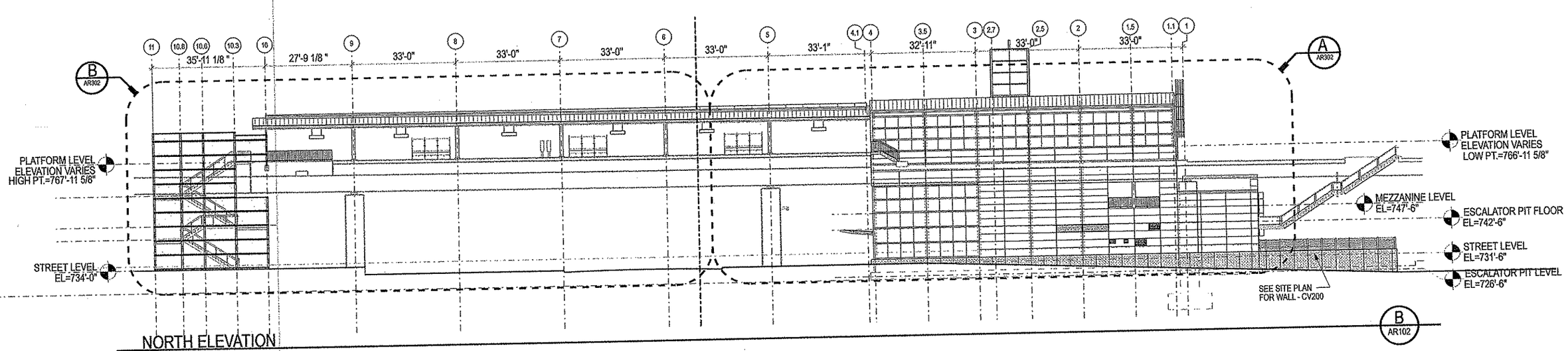

NORTH ELEVATION

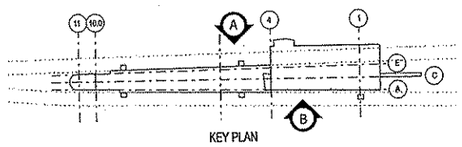

KEY PLAN

BURT, HILL

650 Smithfield Street Suite 2600 Pittsburgh PA 15222
tel: 412.394.7000 fax: 412.394.7880 www.burthill.com
©2006 Burt Hill

NO.	DATE	DESCRIPTION

REVISIONS

THE PREPARATION OF THIS DRAWING HAS BEEN FINANCED, IN PART, THROUGH A GRANT FROM THE U. S. DEPARTMENT OF TRANSPORTATION, FEDERAL TRANSIT ADMINISTRATION UNDER THE URBAN MASS TRANSPORTATION ACT OF 1964, AS AMENDED.

REGISTERED ARCHITECT PENNSYLVANIA

SIGNATURE

DMJM HARRIS | AECOM

FOUR GATEWAY CENTER
20TH FLOOR
PITTSBURGH, PA. 15222

APPROVED — DATE 04/04/08

DESIGNED	PJL
DRAWN	PJL
CHECKED	JCG
IN CHARGE	SA
DATE	4/04/08
SCALE	0 5' 10' 15' 25'

PORT AUTHORITY OF ALLEGHENY COUNTY
PITTSBURGH PENNSYLVANIA

NORTH SHORE CONNECTOR

ALLEGHENY STATION

NORTH AND SOUTH EXTERIOR ELEVATIONS

Port Authority

CONTRACT NO. NSC-012-G
DWG. NO. AR300 SHT. 044

4/15/2008 9:50:44 AM
N:\09062007 CADD\Sheet - Architecture\AS\AR300.dgn

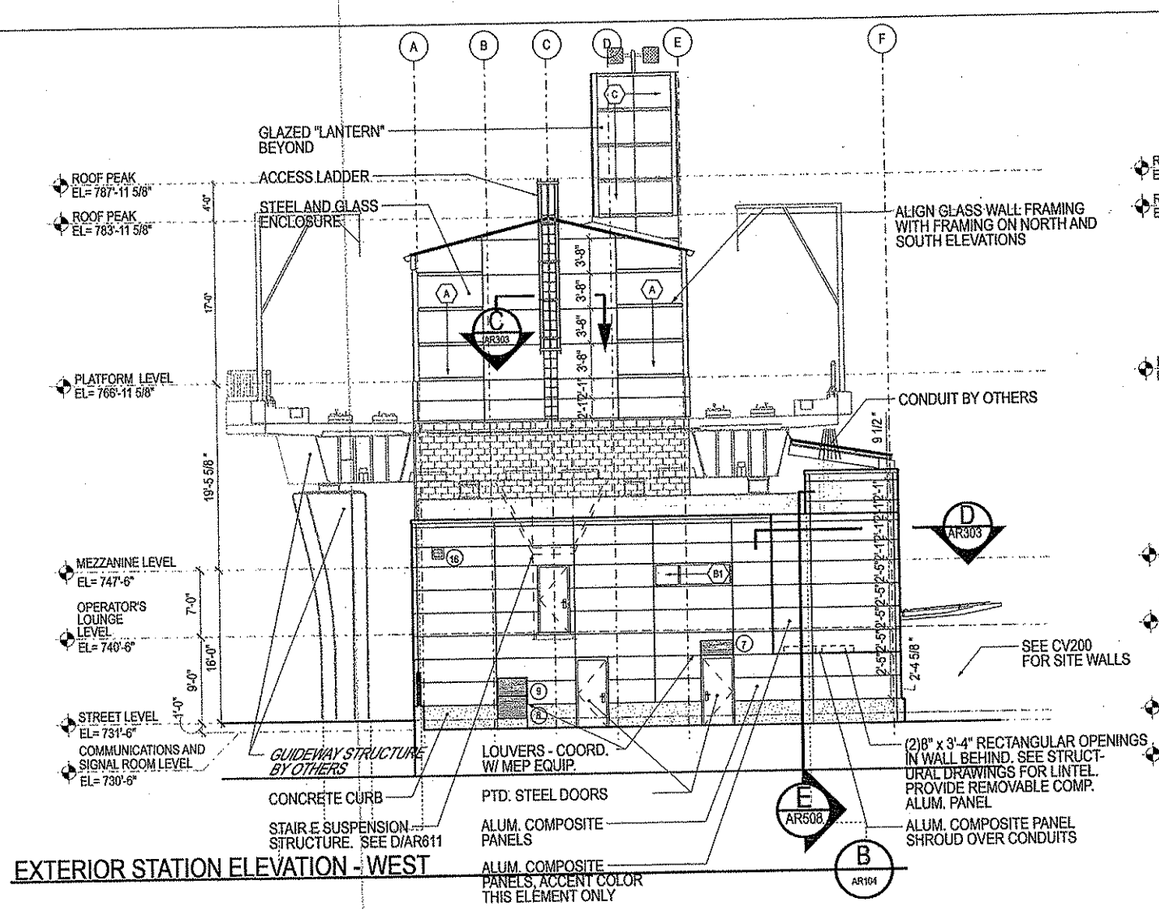

EXTERIOR STATION ELEVATION - WEST

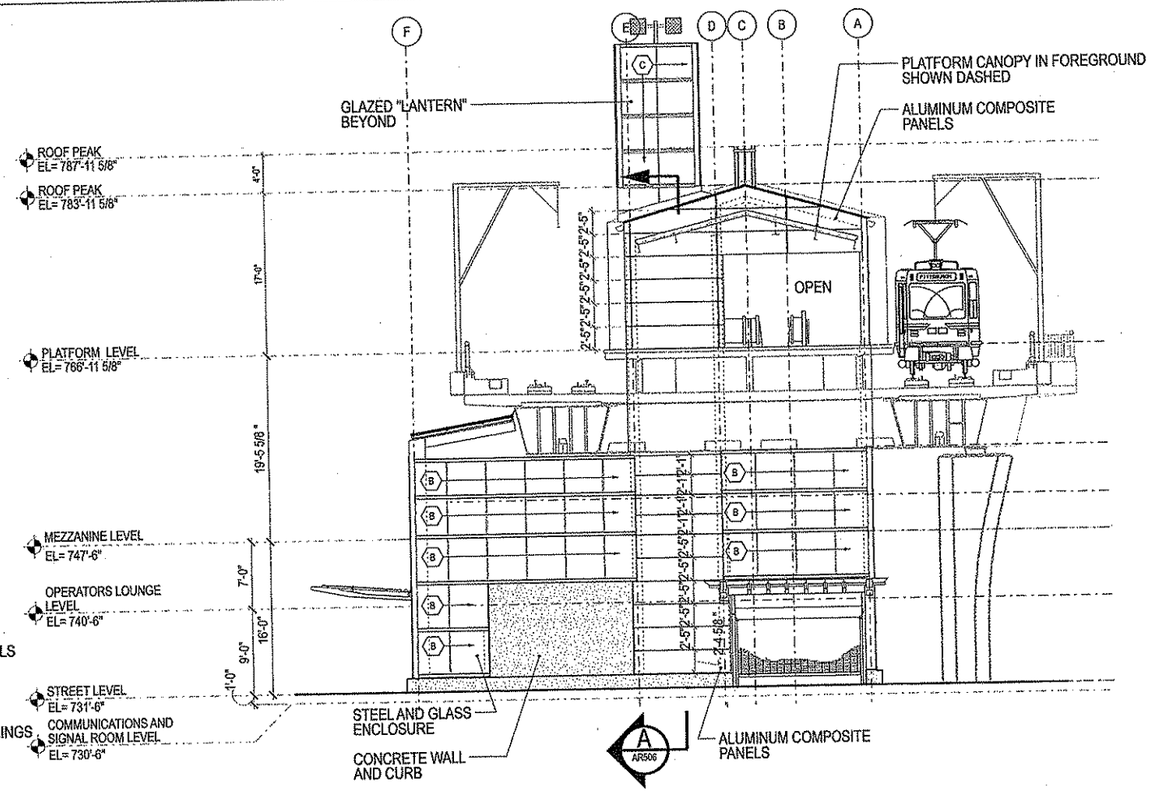

EXTERIOR STATION ELEVATION - EAST

A AR104

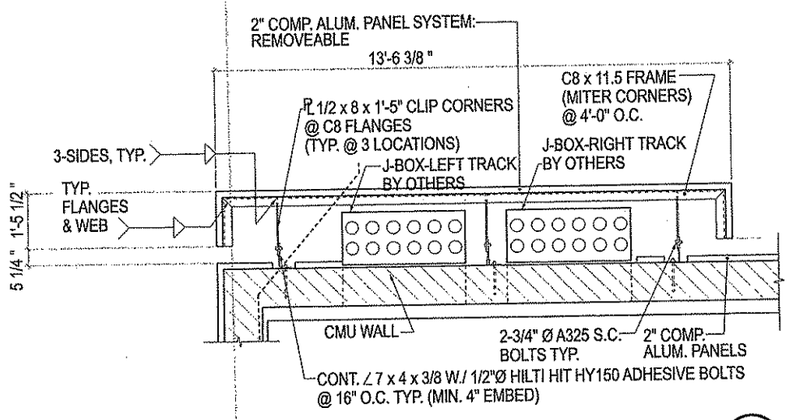

CONDUIT SHROUD DETAIL

D AR303

0 6" 1' 2' 3' 1/2" = 1'-0"

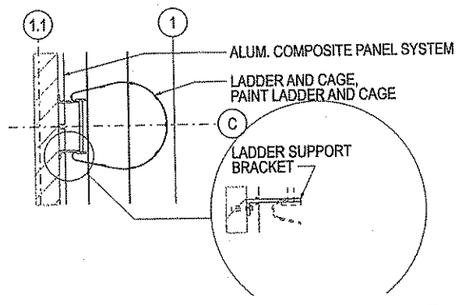

LADDER DETAIL

C AR108

0 6" 1' 2' 3' 1/2" = 1'-0"

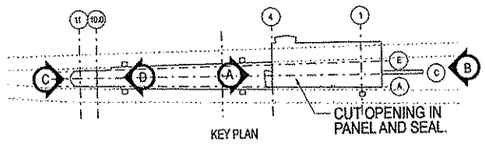

BURT, HILL

650 Smithfield Street Suite 2600 Pittsburgh PA 15222
tel: 412.394.7000 fax: 412.394.7880 www.burthill.com
©2000 Burt Hill

NO.	DATE	DESCRIPTION

REVISIONS

THE PREPARATION OF THIS DRAWING HAS BEEN FINANCED, IN PART, THROUGH A GRANT FROM THE U. S. DEPARTMENT OF TRANSPORTATION, FEDERAL TRANSIT ADMINISTRATION UNDER THE URBAN MASS TRANSPORTATION ACT OF 1964, AS AMENDED.

REGISTERED ARCHITECT PENNSYLVANIA

DMJM HARRIS | AECOM
FOUR GATEWAY CENTER
20TH FLOOR
PITTSBURGH, PA. 15222
APPROVED
04/04/08
DATE

DESIGNED	PJL
DRAWN	PJL
CHECKED	JCG
IN CHARGE	SA
DATE	4/04/08
SCALE	0 2' 4' 8' 12'

PORT AUTHORITY OF ALLEGHENY COUNTY
PITTSBURGH PENNSYLVANIA

NORTH SHORE CONNECTOR
ALLEGHENY STATION
EAST AND WEST STATION AND STAIR "C" ELEVATIONS

Port Authority

CONTRACT NO. NSC-012-G
DWG. NO. AR303 SHT. 047

4/15/2008 9:56:16 AM
N:\005902\007 CADD\Sheet - Architectural\NSNR303.dgn

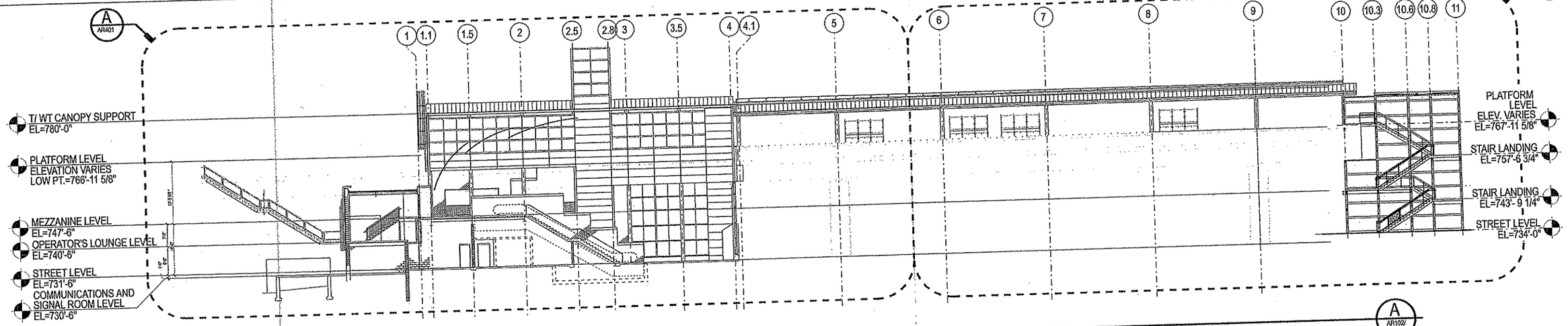

LONGITUDINAL BUILDING SECTION - NORTH

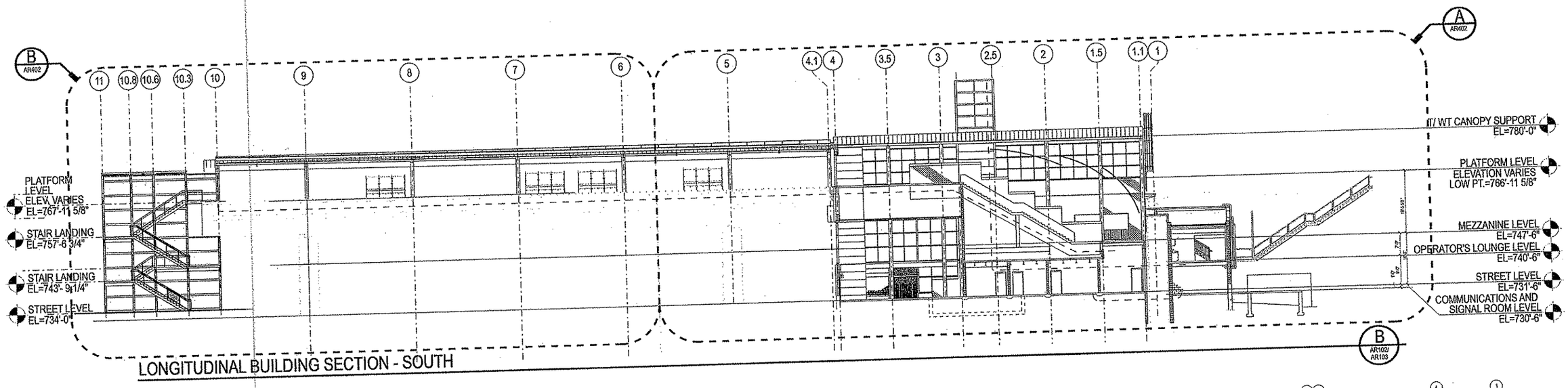

LONGITUDINAL BUILDING SECTION - SOUTH

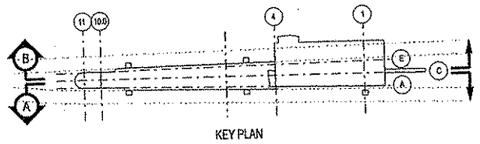

KEY PLAN

BURT, HILL

650 Smithfield Street Suite 2600 Pittsburgh PA 15222
tel: 412.394.7000 fax: 412.394.7880 www.burthill.com
©2006 Burt Hill

NO.	DATE	DESCRIPTION

REVISIONS

THE PREPARATION OF THIS DRAWING HAS BEEN FINANCED, IN PART, THROUGH A GRANT FROM THE U. S. DEPARTMENT OF TRANSPORTATION, FEDERAL TRANSIT ADMINISTRATION UNDER THE URBAN MASS TRANSPORTATION ACT OF 1964, AS AMENDED.

REGISTERED ARCHITECT PENNSYLVANIA

SIGNATURE

DMJM HARRIS | AECOM
FOUR GATEWAY CENTER
20TH FLOOR
PITTSBURGH, PA. 15222

APPROVED — DATE 04/09/08

DESIGNED	PJL
DRAWN	PJL
CHECKED	JCG
IN CHARGE	SA
DATE	4/04/08
SCALE	0 5' 10' 15' 25'

PORT AUTHORITY OF ALLEGHENY COUNTY
PITTSBURGH PENNSYLVANIA

NORTH SHORE CONNECTOR

ALLEGHENY STATION

LONGITUDINAL BUILDING SECTIONS - NORTH AND SOUTH

Port Authority

CONTRACT NO. NSC-012-G
DWG. NO. AR400 SHT. 048

4/15/2008 9:56:51 AM
N:\96969097 CADD\Sheet - Architectural\NSAR400.dgn

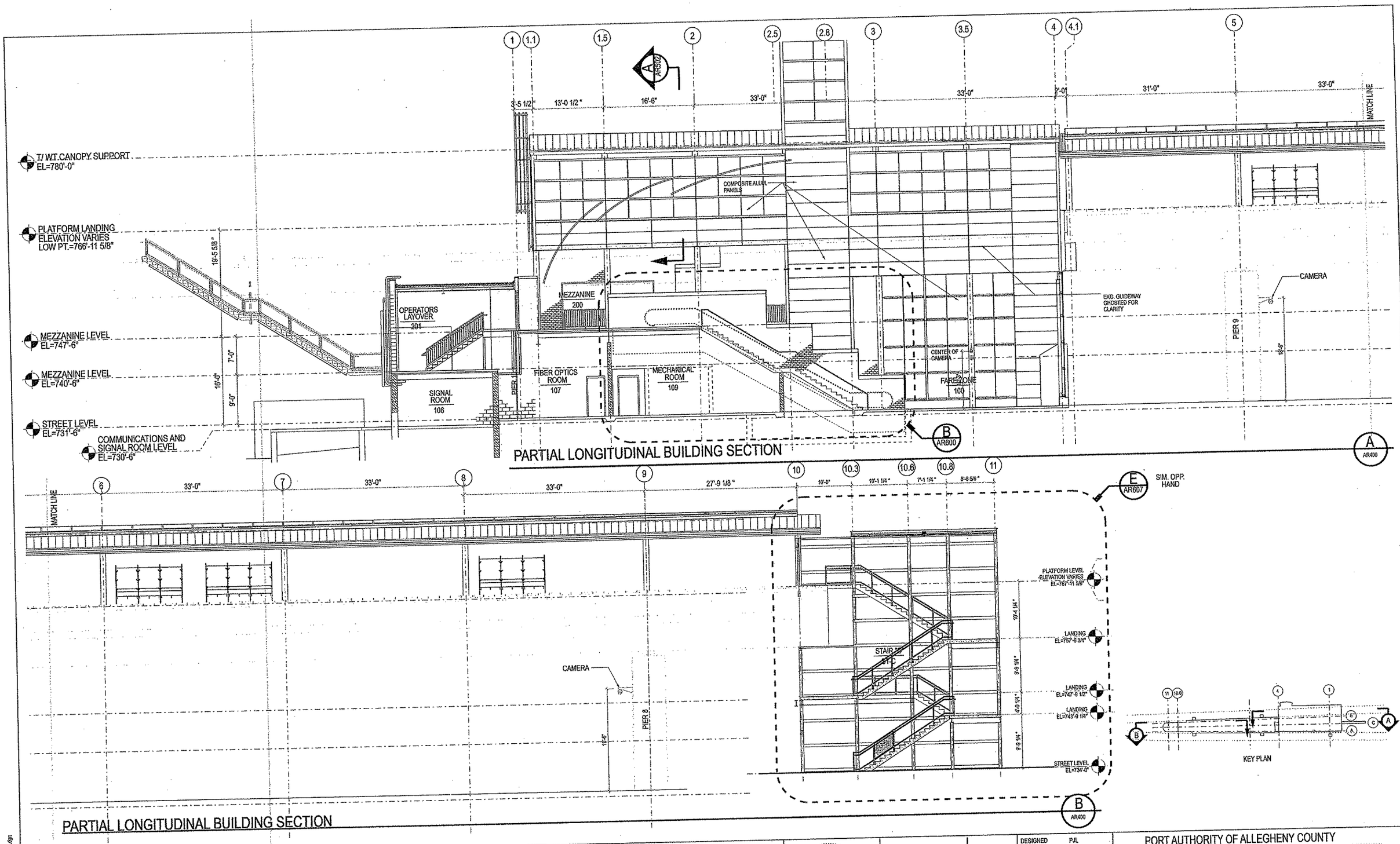

BURT, HILL

650 Smithfield Street Suite 2600 Pittsburgh PA 15222
tel: 412.394.7000 fax: 412.394.7880 www.burthill.com
©2006 Burt Hill

NO.	DATE	DESCRIPTION

REVISIONS

THE PREPARATION OF THIS DRAWING HAS BEEN FINANCED, IN PART, THROUGH A GRANT FROM THE U. S. DEPARTMENT OF TRANSPORTATION, FEDERAL TRANSIT ADMINISTRATION UNDER THE URBAN MASS TRANSPORTATION ACT OF 1964, AS AMENDED.

REGISTERED ARCHITECT PENNSYLVANIA

SIGNATURE

DMJM HARRIS | AECOM
FOUR GATEWAY CENTER
20TH FLOOR
PITTSBURGH, PA. 15222

APPROVED — DATE 04/04/08

DESIGNED	PJL
DRAWN	PJL
CHECKED	JCG
IN CHARGE	SA
DATE	4/04/08
SCALE	0 2' 4' 8' 12'

PORT AUTHORITY OF ALLEGHENY COUNTY
PITTSBURGH PENNSYLVANIA

NORTH SHORE CONNECTOR

ALLEGHENY STATION

PARTIAL LONGITUDINAL BUILDING SECTIONS - NORTH

Port Authority

CONTRACT NO. NSC-012-G
DWG. NO. AR401 SHT. 049

4/15/2008 9:52:18 AM
N:\2005\05007 CAD\PdSheet - Architecture\NSA\AR401.dgn

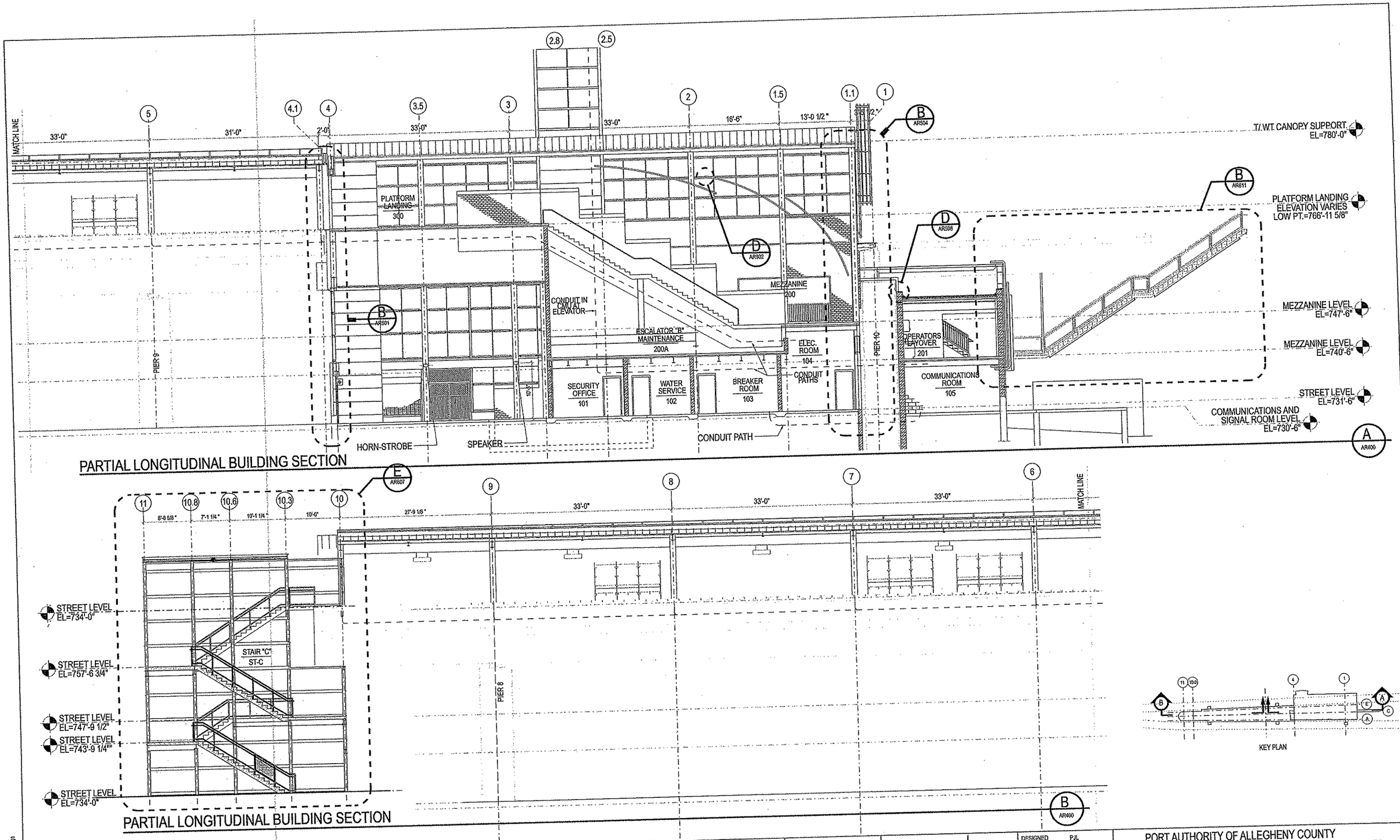

PARTIAL LONGITUDINAL BUILDING SECTION

PARTIAL LONGITUDINAL BUILDING SECTION

KEY PLAN

BURT, HILL

650 Smithfield Street Suite 2600 Pittsburgh PA 15222
tel: 412.394.7000 fax: 412.394.7680 www.burthill.com
©2005 Burt Hill

NO.	DATE	DESCRIPTION

REVISIONS

THE PREPARATION OF THIS DRAWING HAS BEEN FINANCED, IN PART, THROUGH A GRANT FROM THE U. S. DEPARTMENT OF TRANSPORTATION, FEDERAL TRANSIT ADMINISTRATION UNDER THE URBAN MASS TRANSPORTATION ACT OF 1964, AS AMENDED.

REGISTERED ARCHITECT PENNSYLVANIA JOHN C. CLARK

SIGNATURE

DMJM HARRIS | AECOM
FOUR GATEWAY CENTER
20TH FLOOR
PITTSBURGH, PA. 15222

APPROVED — DATE 04/04/08

DESIGNED	PJL
DRAWN	PJL
CHECKED	JCG
IN CHARGE	SA
DATE	4/04/08
SCALE	0 2' 4' 8' 12'

PORT AUTHORITY OF ALLEGHENY COUNTY
PITTSBURGH PENNSYLVANIA

NORTH SHORE CONNECTOR

ALLEGHENY STATION

PARTIAL LONGITUDINAL BUILDING SECTIONS - SOUTH

Port Authority

CONTRACT NO. NSC-012-G
DWG. NO. AR402 SHT. 050

4/15/2008 9:57:41 AM
N:\0006\2007 CADD\Sheet - Architectural\NSC\AR402.dgn

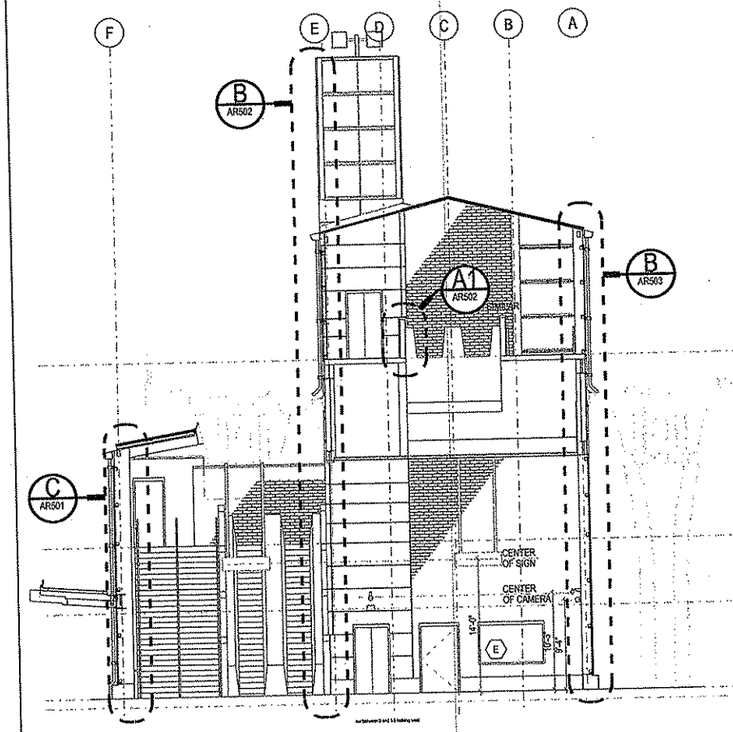

TRANSVERSE BUILDING SECTION

BETWEEN 3 & 3.5 WEST

C AR102

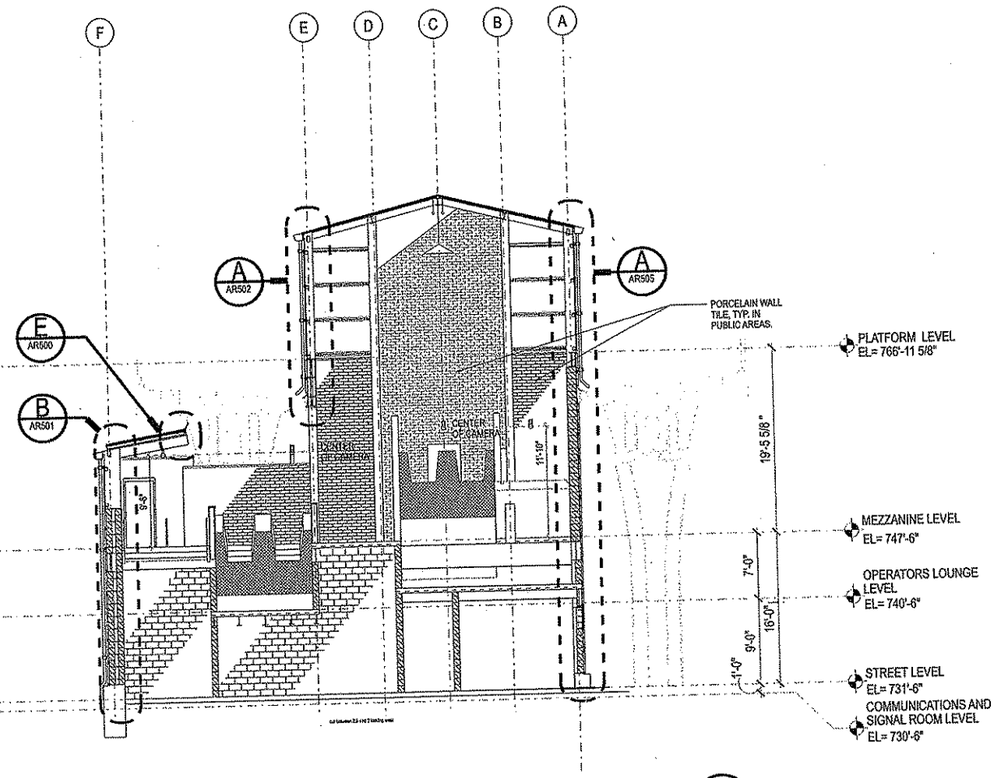

TRANSVERSE BUILDING SECTION

BETWEEN 2 & 2.5 WEST

B AR102

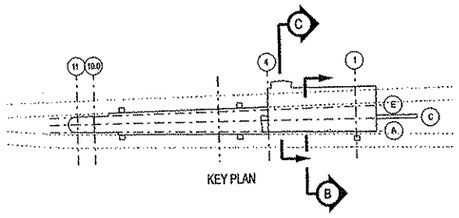

KEY PLAN

BURT, HILL
650 Smithfield Street Suite 2600 Pittsburgh PA 15222
tel: 412.394.7000 fax: 412.394.7080 www.burthill.com

©2006 Burt Hill

4/15/2008 9:58:14 AM
N:\06\06020007 CM\DB\Sheet - Architecture\NSA\R403.dgn

NO.	DATE	DESCRIPTION

REVISIONS

THE PREPARATION OF THIS DRAWING HAS BEEN FINANCED, IN PART, THROUGH A GRANT FROM THE U. S. DEPARTMENT OF TRANSPORTATION, FEDERAL TRANSIT ADMINISTRATION UNDER THE URBAN MASS TRANSPORTATION ACT OF 1964, AS AMENDED.

REGISTERED ARCHITECT PENNSYLVANIA

SIGNATURE

DMJM HARRIS | AECOM
FOUR GATEWAY CENTER
20TH FLOOR
PITTSBURGH, PA. 15222

APPROVED — DATE 04/04/08

DESIGNED	PJL
DRAWN	PJL
CHECKED	JCG
IN CHARGE	SA
DATE	4/04/08
SCALE	0 2' 4' 8' 12'

PORT AUTHORITY OF ALLEGHENY COUNTY
PITTSBURGH PENNSYLVANIA

NORTH SHORE CONNECTOR
ALLEGHENY STATION
TRANSVERSE BUILDING SECTIONS

Port Authority

CONTRACT NO. NSC-012-G
DWG. NO. AR403 SHT. 051

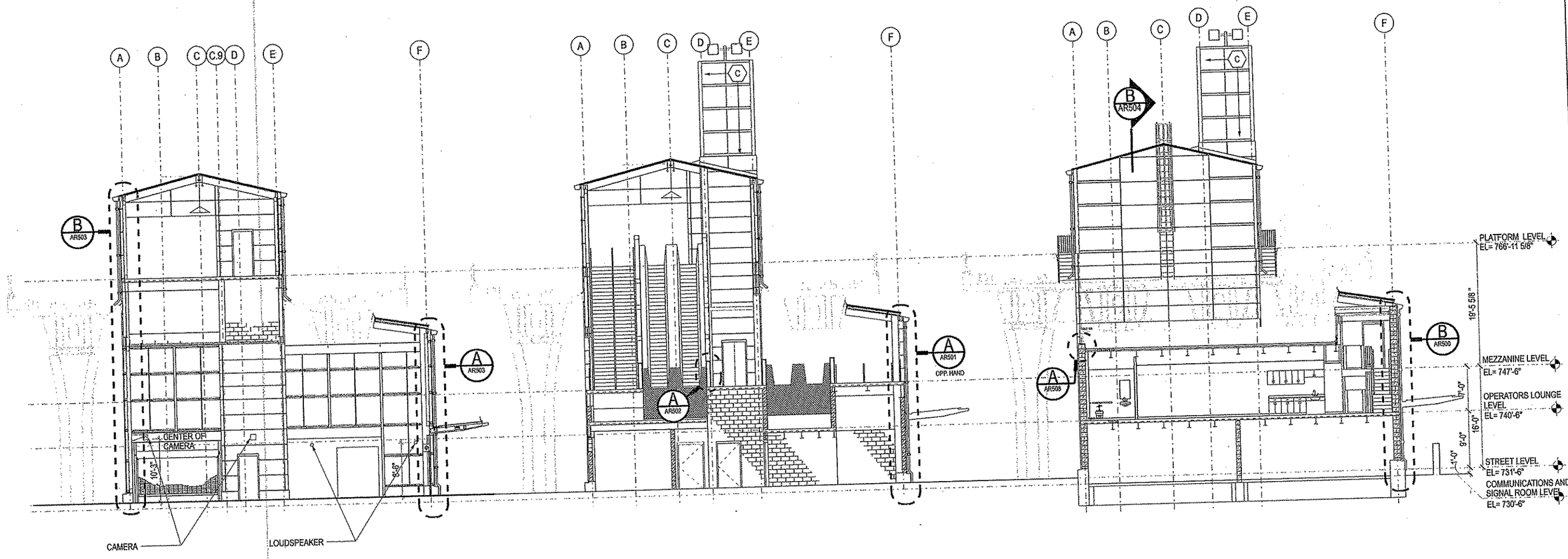

TRANSVERSE BUILDING SECTION

C AR102

BETWEEN 4 & 3.5 LOOKING EAST

TRANSVERSE BUILDING SECTION

B AR102

BETWEEN 1.1 & 1.5 LOOKING EAST

TRANSVERSE BUILDING SECTION

A AR102

THROUGH OPERATORS LOUNGE LOOKING EAST

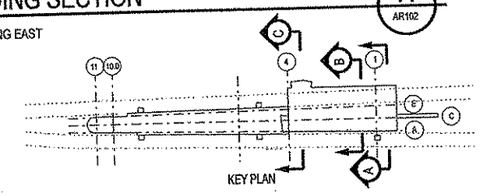

BURT, HILL

650 Smithfield Street Suite 2600 Pittsburgh PA 15222
tel. 412.394.7000 fax 412.394.7880 www.burthill.com

©2006 Burt Hill

4/15/2008 9:35:46 AM
N:\06060\2007 CAD\DSheet - Architect\dwg\NSAR404.dgn

NO.	DATE	DESCRIPTION

REVISIONS

THE PREPARATION OF THIS DRAWING HAS BEEN FINANCED, IN PART, THROUGH A GRANT FROM THE U. S. DEPARTMENT OF TRANSPORTATION, FEDERAL TRANSIT ADMINISTRATION UNDER THE URBAN MASS TRANSPORTATION ACT OF 1964, AS AMENDED.

REGISTERED ARCHITECT PENNSYLVANIA

SIGNATURE

DMJM HARRIS | AECOM

FOUR GATEWAY CENTER
20TH FLOOR
PITTSBURGH, PA. 15222

APPROVED

04/04/08
DATE

DESIGNED	PJL
DRAWN	PJL
CHECKED	JCG
IN CHARGE	SA
DATE	4/04/08
SCALE	0 2' 4' 8' 12'

PORT AUTHORITY OF ALLEGHENY COUNTY
PITTSBURGH PENNSYLVANIA

NORTH SHORE CONNECTOR

ALLEGHENY STATION

TRANSVERSE BUILDING SECTIONS

Port Authority

CONTRACT NO. NSC-012-G

DWG. NO. AR404 SHT. 052

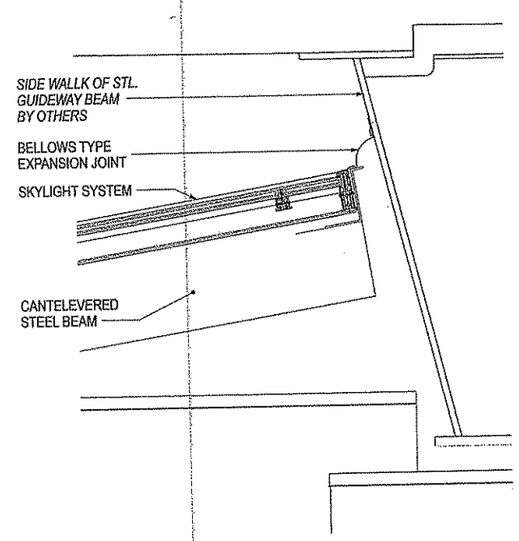

DETAIL @ BUILDING TO BUIDEWAY BEAM EXPANSION JOINT

E AR403

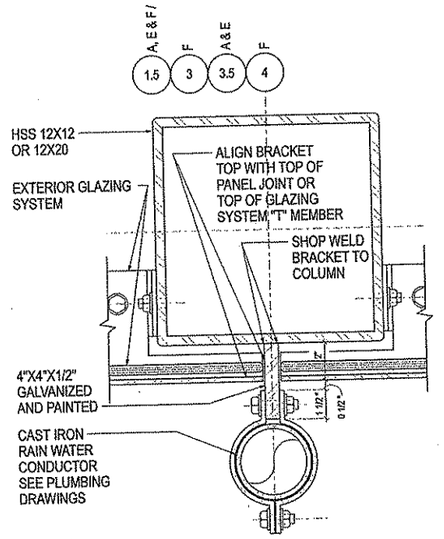

RAIN WATER CONDUCTOR BRACKET DETAIL

C AR106

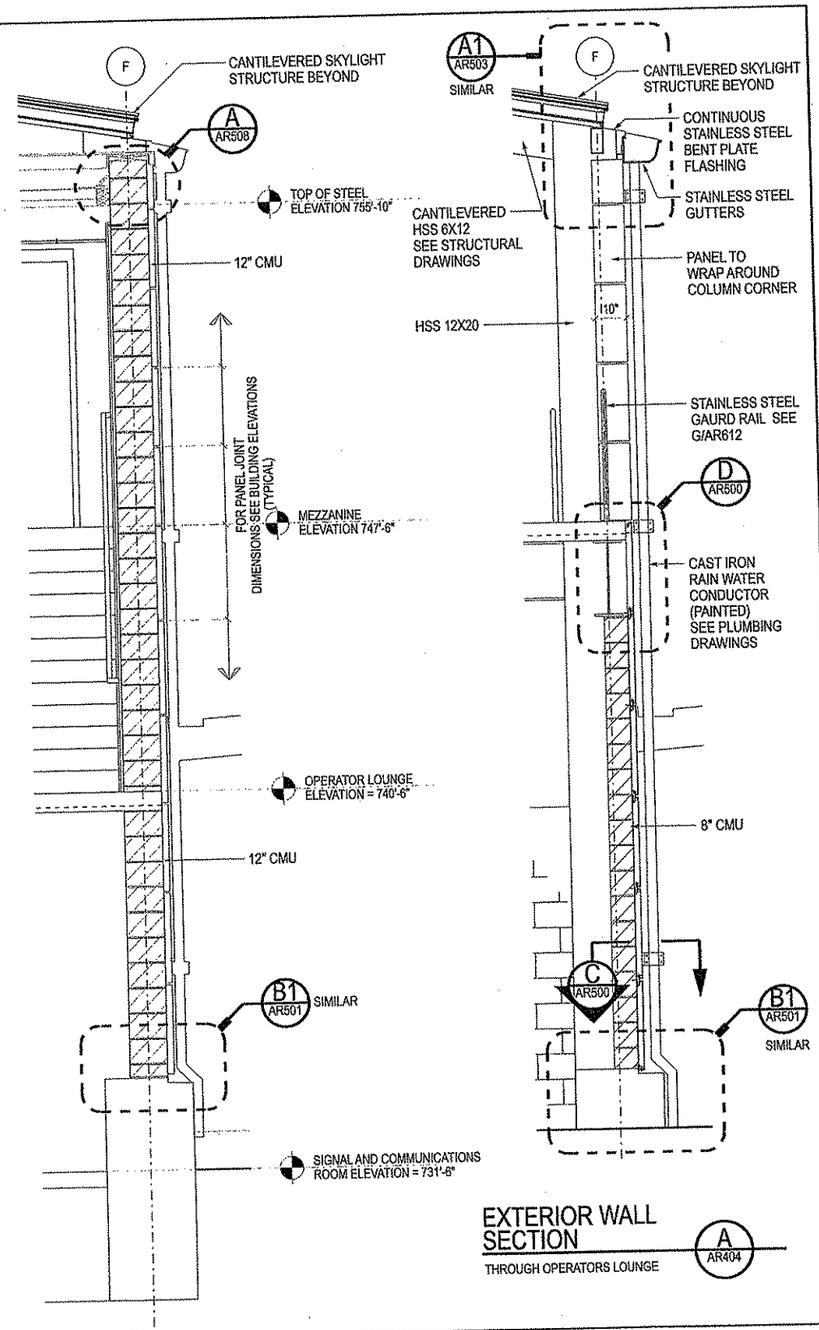

EXTERIOR WALL SECTION

THROUGH OPERATORS LOUNGE

A AR404

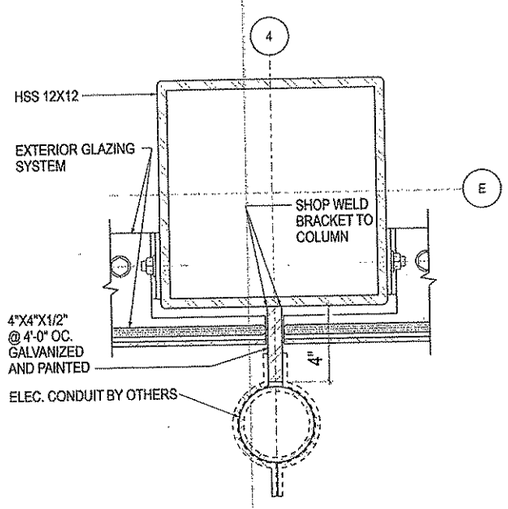

SIGNAL CONDUIT BRACKET DETAIL

F AR106

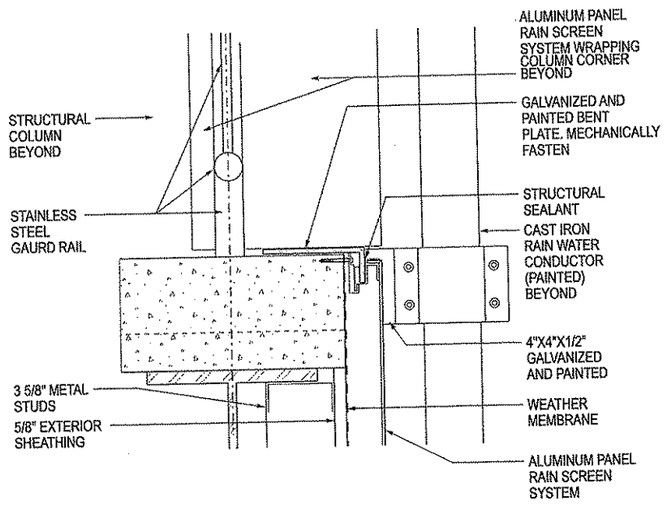

RAIN WATER CONDUCTOR BRACKET DETAIL

D AR500

EXTERIOR WALL SECTION

1.5 & 1.1 EAST

B AR404

BURT, HILL

650 Smithfield Street Suite 2600 Pittsburgh PA 15222
tel: 412.394.7000 fax: 412.394.7880 www.burthill.com
©2006 Burt Hill

NO.	DATE	DESCRIPTION

REVISIONS

THE PREPARATION OF THIS DRAWING HAS BEEN FINANCED, IN PART, THROUGH A GRANT FROM THE U. S. DEPARTMENT OF TRANSPORTATION, FEDERAL TRANSIT ADMINISTRATION UNDER THE URBAN MASS TRANSPORTATION ACT OF 1964, AS AMENDED.

REGISTERED ARCHITECT PENNSYLVANIA

SIGNATURE

DMJM HARRIS | AECOM

FOUR GATEWAY CENTER
20TH FLOOR
PITTSBURGH, PA. 15222

APPROVED — DATE 04/04/08

DESIGNED	TM
DRAWN	TM
CHECKED	JCG
IN CHARGE	SA
DATE	4/04/08
SCALE	0 6" 1' 2' 3'

PORT AUTHORITY OF ALLEGHENY COUNTY
PITTSBURGH PENNSYLVANIA

NORTH SHORE CONNECTOR

ALLEGHENY STATION

WALL SECTIONS AND DETAILS

Port Authority

CONTRACT NO. NSC-012-G

DWG. NO. AR500 SHT. 054

4/15/2008 9:49:32 AM

N:\06050007 CAD\Sheet - Architecture\NSAR500.dgn

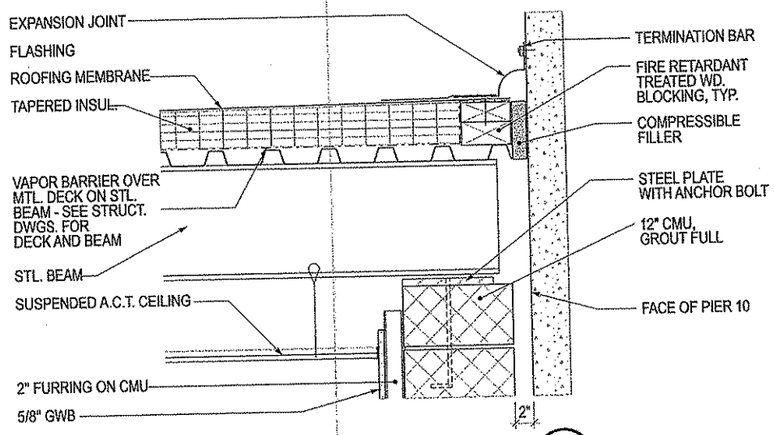

ROOF DETAIL D AR106

0 3" 6" 9" 1'

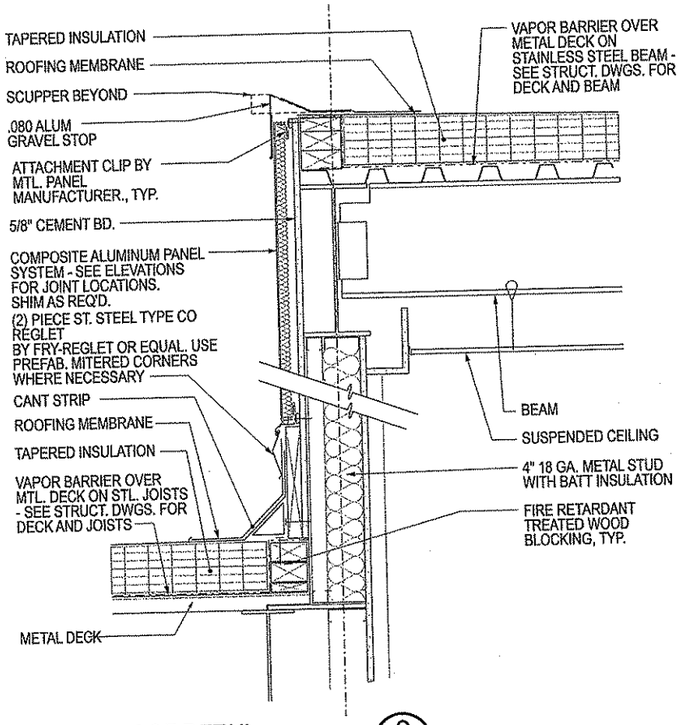

ROOF DETAIL C AR106

0 3" 6" 9" 1'

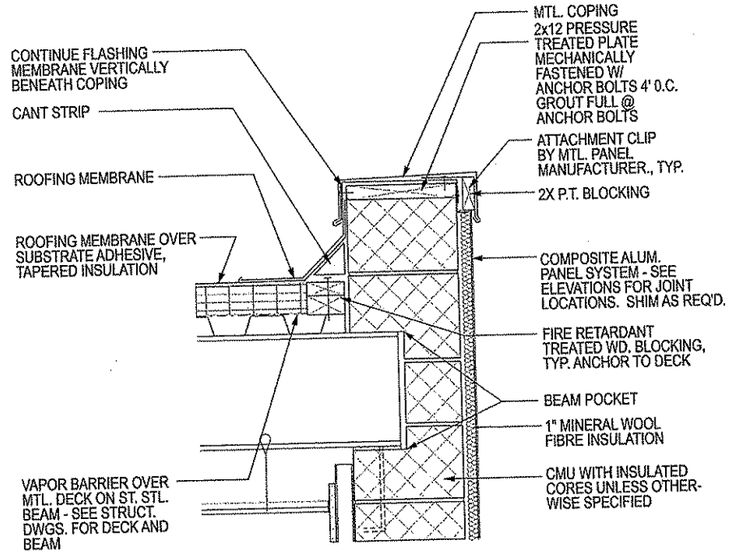

PARAPET DETAIL A AR106

0 3" 6" 9" 1'
1 1/2" = 1'-0"

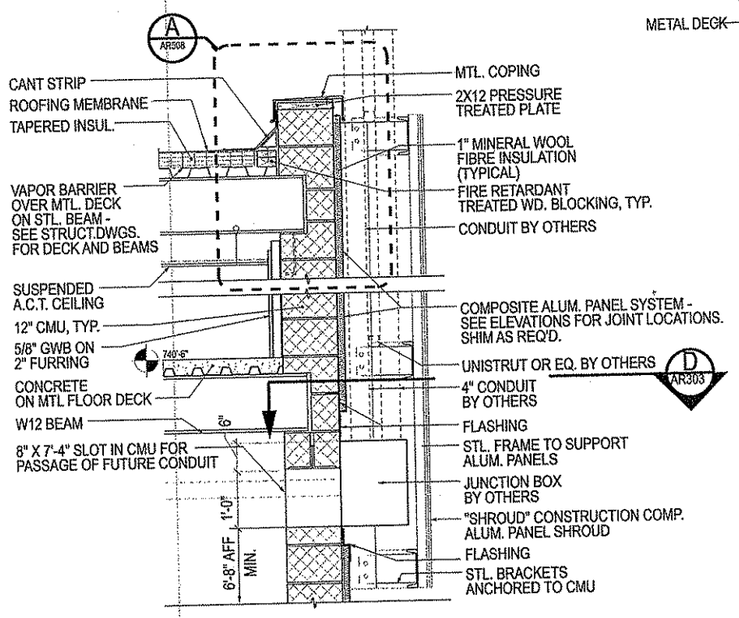

CONDUIT "SHROUD" @ SIGNAL ROOM E AR106

0 3" 6" 9" 1' 2'

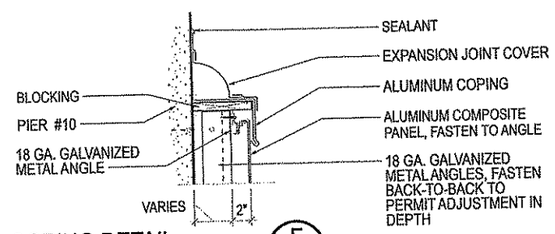

COPING DETAIL F AR106

0 3" 6" 9" 1'

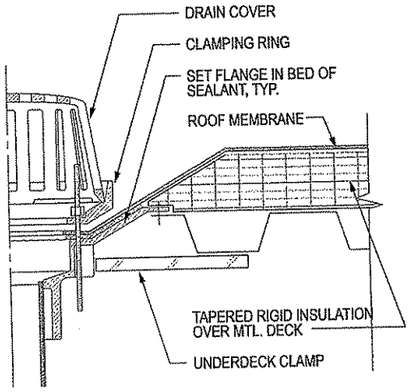

ROOF DRAIN DETAIL B AR106

0 3" 6" 9" 1'
1 1/2" = 1'-0"

BURT, HILL

650 Smithfield Street Suite 2600 Pittsburgh PA 15222
tel: 412.394.7000 fax: 412.394.7580 www.burthill.com
©2006 Burt Hill

NO.	DATE	DESCRIPTION

REVISIONS

THE PREPARATION OF THIS DRAWING HAS BEEN FINANCED, IN PART, THROUGH A GRANT FROM THE U. S. DEPARTMENT OF TRANSPORTATION, FEDERAL TRANSIT ADMINISTRATION UNDER THE URBAN MASS TRANSPORTATION ACT OF 1964, AS AMENDED.

REGISTERED ARCHITECT COMMONWEALTH OF PENNSYLVANIA

SIGNATURE

DMJM HARRIS | AECOM

FOUR GATEWAY CENTER
20TH FLOOR
PITTSBURGH, PA. 15222

APPROVED

04/04/08
DATE

DESIGNED	TM
DRAWN	TM
CHECKED	JCG
IN CHARGE	SA
DATE	4/04/08
SCALE	AS NOTED

PORT AUTHORITY OF ALLEGHENY COUNTY
PITTSBURGH PENNSYLVANIA

NORTH SHORE CONNECTOR
ALLEGHENY STATION
ROOF AND PARAPET DETAILS

Port Authority

CONTRACT NO. NSC-012-G
DWG. NO. AR508 SHT. 063

4/15/2008 10:01:57 AM
N:\06062007 CADD\Sheet - Architecture\NSAR508.dgn

4/15/2008 10:03:00 AM

N:\0506020007 CADD\Sheet - Architecture\NSAR514.dgn

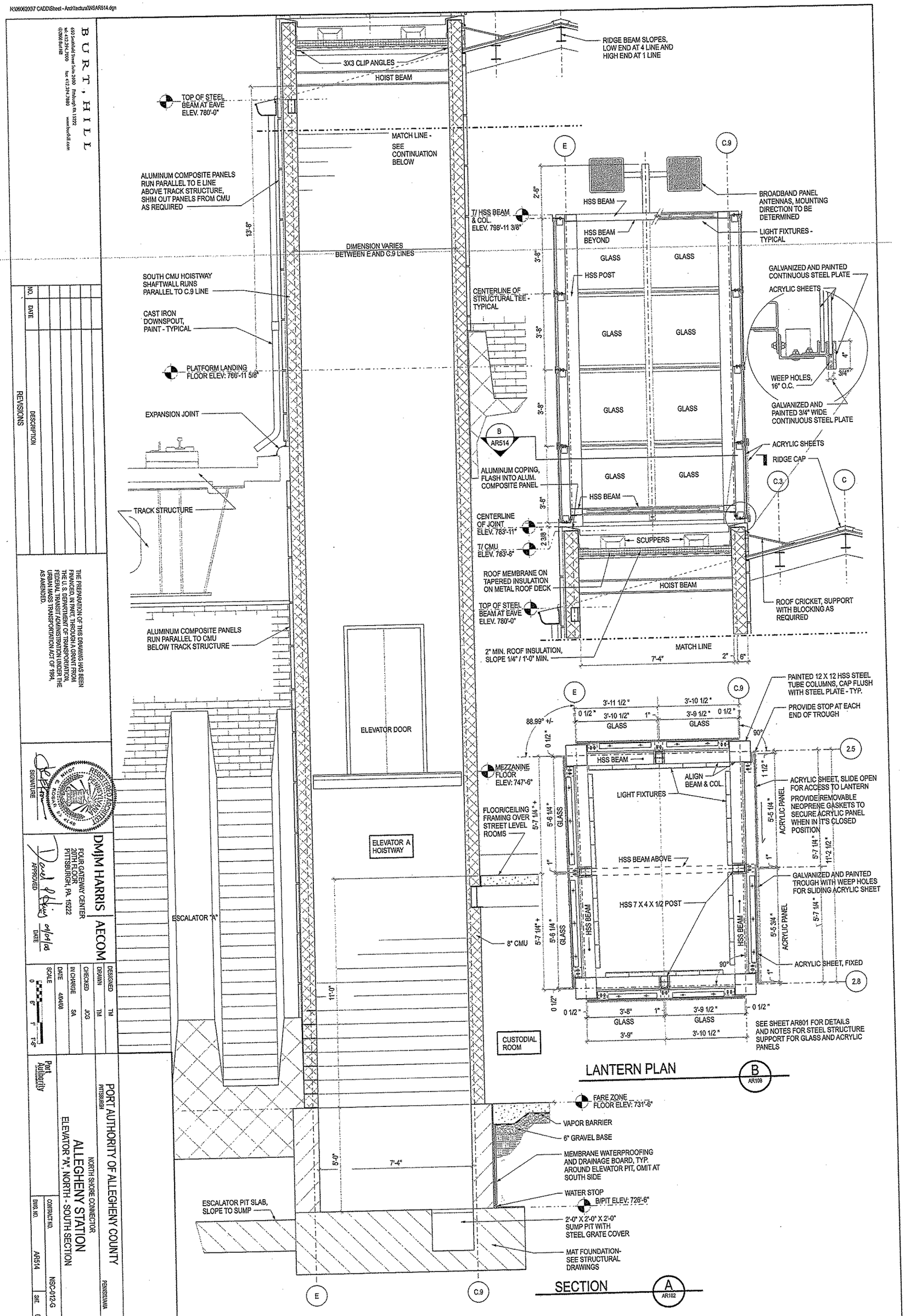

BURT, HILL

REVISIONS

NO.	DATE	DESCRIPTION

THE PREPARATION OF THIS DRAWING HAS BEEN FINANCED, IN PART, THROUGH A GRANT FROM THE U.S. DEPARTMENT OF TRANSPORTATION, FEDERAL TRANSIT ADMINISTRATION UNDER THE URBAN MASS TRANSPORTATION ACT OF 1964, AS AMENDED.

SIGNATURE

DMJM HARRIS | AECOM

FOUR GATEWAY CENTER
444 LIBERTY AVE
PITTSBURGH, PA. 15222

APPROVED

DATE

DESIGNED	TM
DRAWN	TM
CHECKED	JCG
IN CHARGE	SA
DATE	4/08/08
SCALE	0 6" 1' 1'-6"

Port Authority

PORT AUTHORITY OF ALLEGHENY COUNTY
PITTSBURGH

NORTH SHORE CONNECTOR
PENNSYLVANIA

ALLEGHENY STATION
ELEVATOR "A", NORTH - SOUTH SECTION

DWG. NO. AR514 | CONTRACT NO. NSC-012-G | SHT. 057

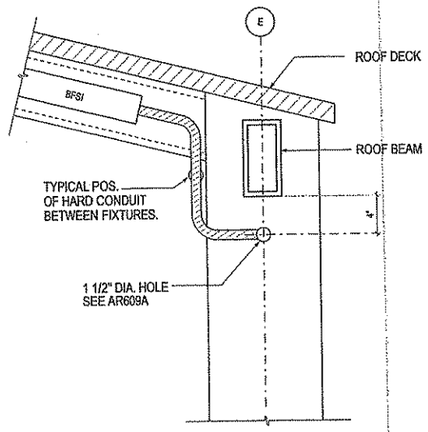

LOBBY COLUMN E / 1.5 CONDITION AT ROOF OF STATION (K / AR608)

1 1/2" = 1'-0"

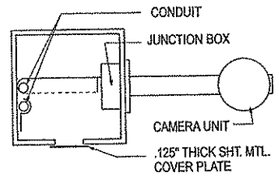

COLUMN PLAN (G / AR608)

1 1/2" = 1'-0"

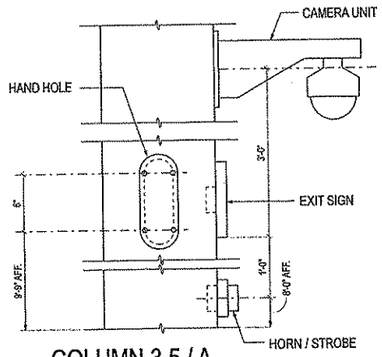

COLUMN 3.5 / A ELEVATION CONT'D (H / AR608)

1 1/2" = 1'-0"

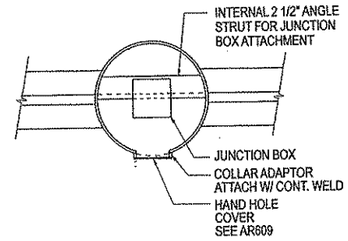

COLUMN PLAN (E / AR608)

1 1/2" = 1'-0"

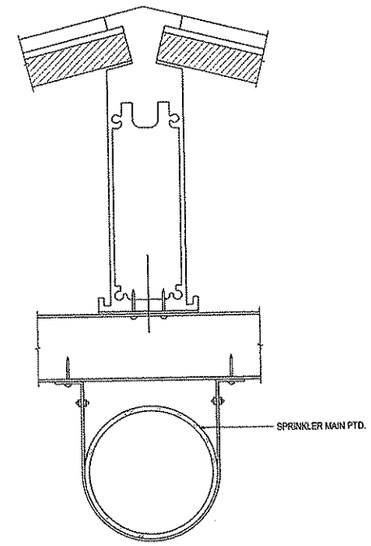

PIPE HANGER @ PLATFORM (C / A608)

6" = 1'-0"

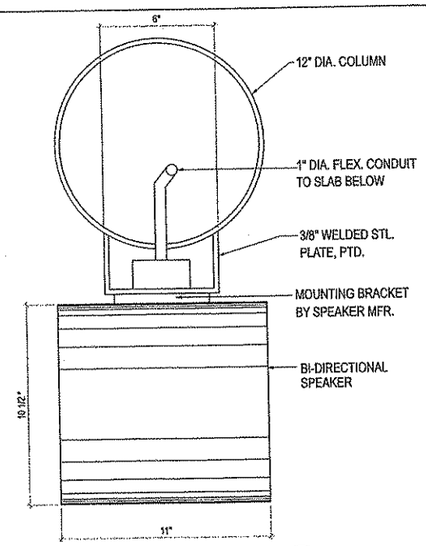

SECTION (A / AR608)

3" = 1'-0"

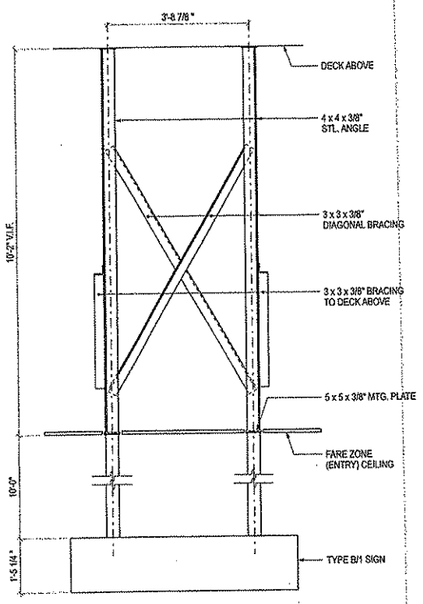

FARE ZONE SIGN B/1 SUSPENSION DETAIL (L / AR608)

1/2" = 1'-0"

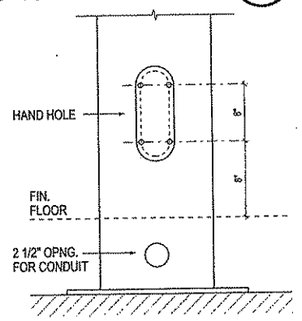

COLUMN 3.5 / A ELEVATION (J / AR608)

1 1/2" = 1'-0"

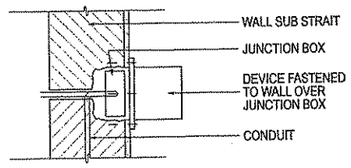

DEVICE MOUNTING DETAIL @ WALL (M / AR608)

1 1/2" = 1'-0"

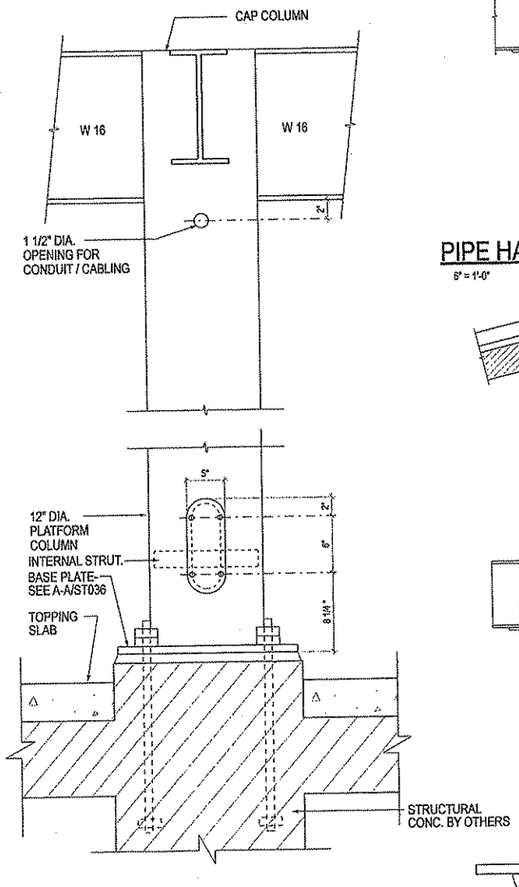

TYP. PLATFORM COL. WITH DEVICES (F / AR608)

1 1/2" = 1'-0"

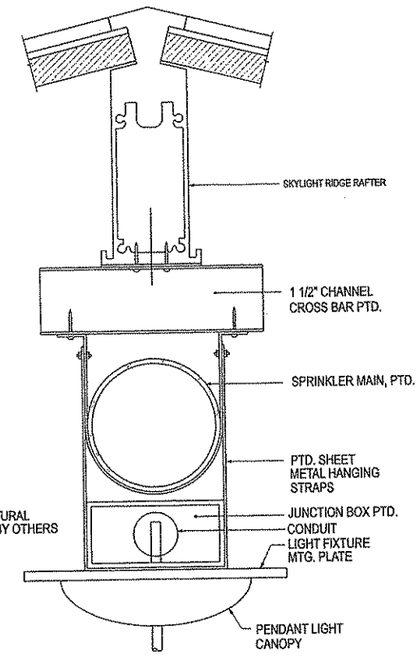

PIPE HANGER (D / A608)

6" = 1'-0"

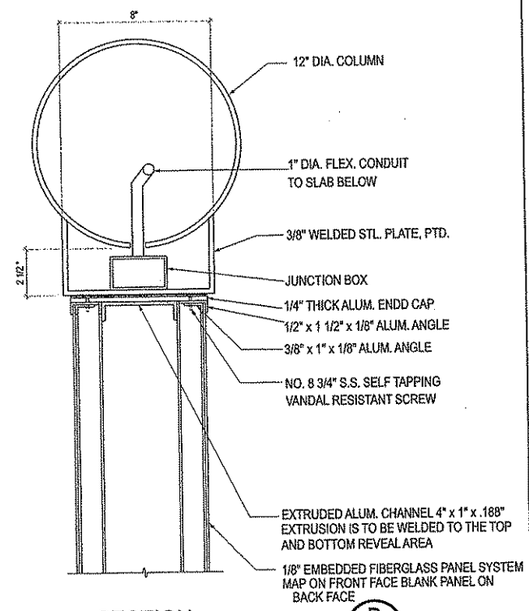

SECTION (B / AR608)

3" = 1'-0"

BURT, HILL
650 Smithfield Street Suite 2600 Pittsburgh PA 15222
tel: 412.394.7000 fax: 412.394.7880 www.burthill.com

©2008 Burt Hill

NO.	DATE	DESCRIPTION

REVISIONS

THE PREPARATION OF THIS DRAWING HAS BEEN FINANCED, IN PART, THROUGH A GRANT FROM THE U. S. DEPARTMENT OF TRANSPORTATION, FEDERAL TRANSIT ADMINISTRATION UNDER THE URBAN MASS TRANSPORTATION ACT OF 1964, AS AMENDED.

REGISTERED ARCHITECT PENNSYLVANIA

SIGNATURE

DMJM HARRIS | AECOM
FOUR GATEWAY CENTER
20TH FLOOR
PITTSBURGH, PA. 15222

APPROVED — DATE 04/04/08

DESIGNED	JCC
DRAWN	JCC
CHECKED	JCG
IN CHARGE	SA
DATE	4/04/08
SCALE	AS NOTED

PORT AUTHORITY OF ALLEGHENY COUNTY
PITTSBURGH PENNSYLVANIA

NORTH SHORE CONNECTOR
ALLEGHENY STATION
DEVICE INTEGRATION DETAILS

Port Authority

CONTRACT NO. NSC-012-G
DWG. NO. AR608 SHT. 073

4/15/2008 10:04:33 AM
N:\0006\2007 CAD\Sheet - Architecture\NSAR608.dgn

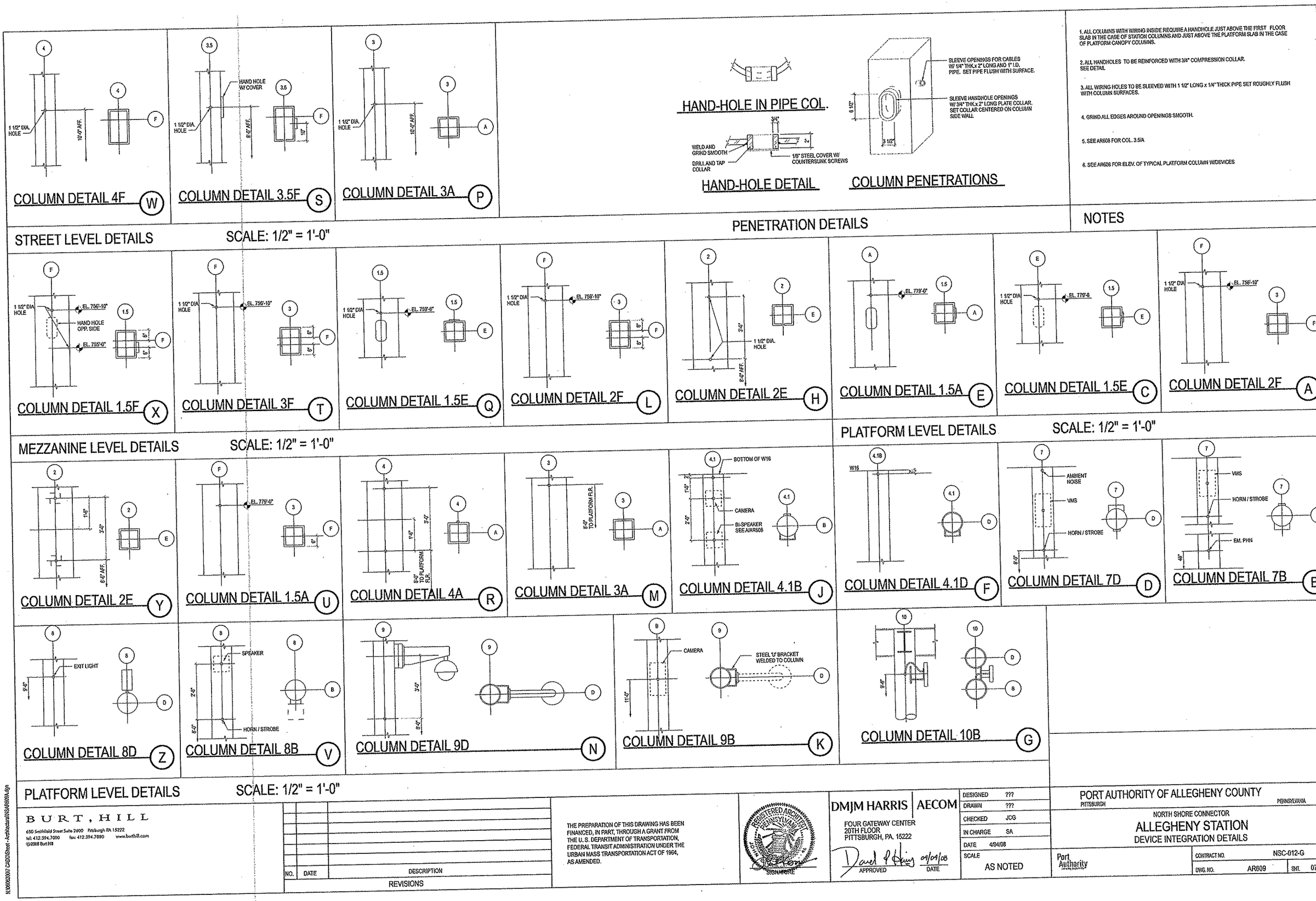

1. ALL COLUMNS WITH WIRING INSIDE REQUIRE A HANDHOLE JUST ABOVE THE FIRST FLOOR SLAB IN THE CASE OF STATION COLUMNS AND JUST ABOVE THE PLATFORM SLAB IN THE CASE OF PLATFORM CANOPY COLUMNS.

2. ALL HANDHOLES TO BE REINFORCED WITH 3/4" COMPRESSION COLLAR. SEE DETAIL

3. ALL WIRING HOLES TO BE SLEEVED WITH 1 1/2" LONG x 1/4" THICK PIPE SET ROUGHLY FLUSH WITH COLUMN SURFACES.

4. GRIND ALL EDGES AROUND OPENINGS SMOOTH.

5. SEE AR608 FOR COL. 3.5/A

6. SEE AR608 FOR ELEV. OF TYPICAL PLATFORM COLUMN W/DEVICES

NOTES

BURT, HILL

650 Smithfield Street Suite 2600 Pittsburgh PA 15222
tel: 412.394.7000 fax: 412.394.7880 www.burthill.com
©2008 Burt Hill

NO.	DATE	DESCRIPTION

REVISIONS

THE PREPARATION OF THIS DRAWING HAS BEEN FINANCED, IN PART, THROUGH A GRANT FROM THE U. S. DEPARTMENT OF TRANSPORTATION, FEDERAL TRANSIT ADMINISTRATION UNDER THE URBAN MASS TRANSPORTATION ACT OF 1964, AS AMENDED.

REGISTERED ARCHITECT PENNSYLVANIA
SIGNATURE

DMJM HARRIS | AECOM
FOUR GATEWAY CENTER
20TH FLOOR
PITTSBURGH, PA. 15222

APPROVED 09/09/08 DATE

DESIGNED	???
DRAWN	???
CHECKED	JCG
IN CHARGE	SA
DATE	4/04/08
SCALE	AS NOTED

PORT AUTHORITY OF ALLEGHENY COUNTY
PITTSBURGH PENNSYLVANIA

NORTH SHORE CONNECTOR
ALLEGHENY STATION
DEVICE INTEGRATION DETAILS

Port Authority

CONTRACT NO. NSC-012-G
DWG. NO. AR609 SHT. 074

4/15/2008 10:05:01 AM
N:\06062007 CADD\Sheet - Architectural\NSAR609A.dgn

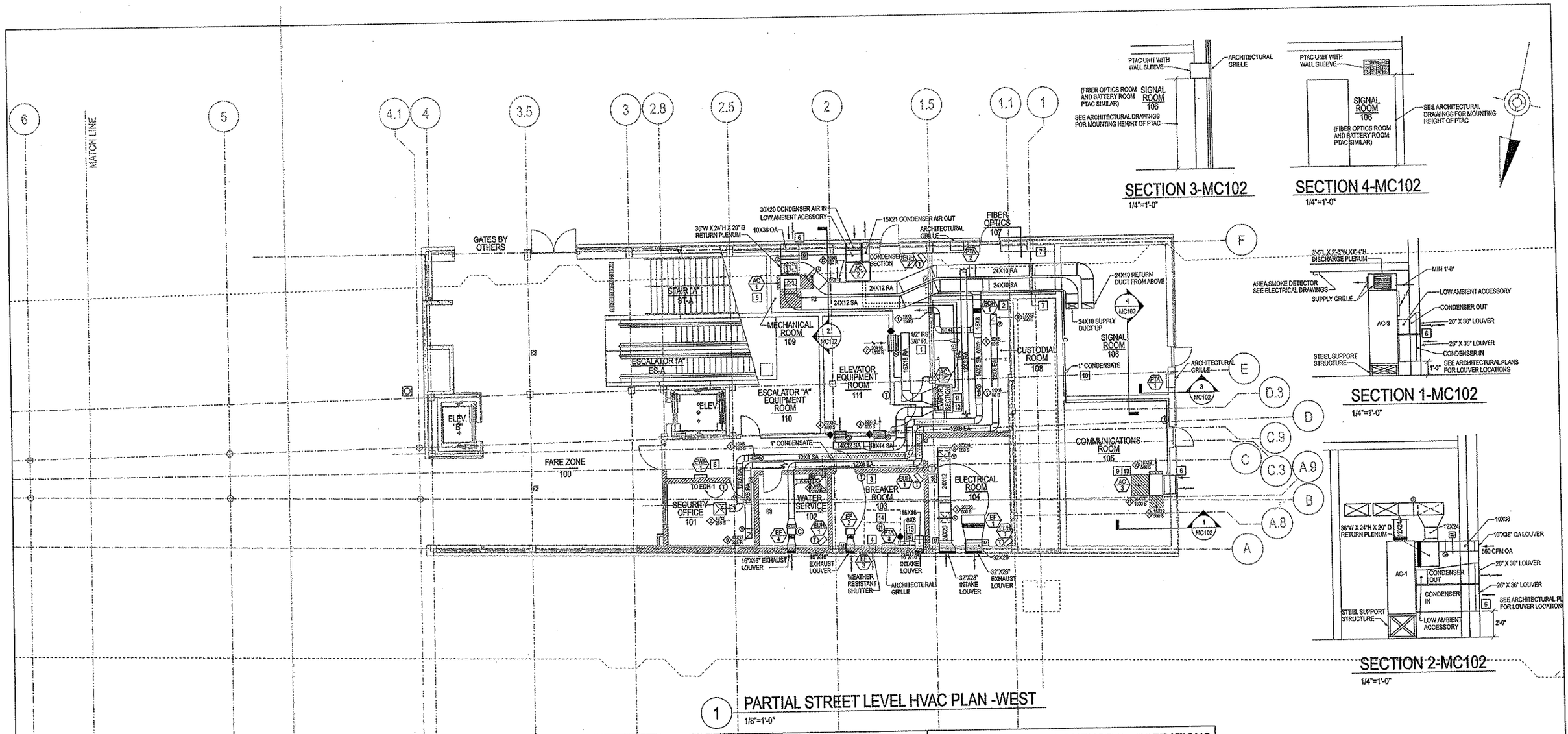

1 PARTIAL STREET LEVEL HVAC PLAN -WEST

1/8"=1'-0"

GENERAL NOTES

1. REFER TO SHEET MC001 FOR ADDITIONAL HVAC GENERAL NOTES.
2. DO NOT SCALE DRAWINGS.
3. PROVIDE 1" ACOUSTICAL DUCT LINING IN SUPPLY AND RETURN DUCTWORK. INSULATION SHALL BE INSTALLED IN STRICT ACCORDANCE WITH SMACNA DUCT CONSTRUCTION STANDARDS AND MANUFACTURERS RECOMMENDATIONS.
4. DUCTWORK FOR AC-1, AC-2, AND AC-3 CONDENSER AIR IN AND OUT SHALL BE STAINLESS STEEL.

KEYNOTES

1. INSTALL REFRIGERANT PIPING PER MANUFACTURER'S INSTALLATION GUIDELINES. INSTALL HVAC UNIT EVAPORATOR AND CONDENSER SPLIT SECTIONS IN SAME PLANE. MAXIMUM LENGTH OF REFRIGERANT PIPING IS 50 EQUIVALENT FEET.
2. INSTALL 12X6 RETURN DUCTWORK TO MAINTAIN CLEARANCE AND SERVICE REQUIREMENTS FOR ELECTRIC DUCT HEATER EDH-1.
3. EXHAUST FAN TO BE CONTROLLED BY THERMOSTAT. ON A CALL FOR COOLING, MOTORIZED DAMPERS AT INTAKE AND EXHAUST LOUVERS SHALL OPEN. AFTER PROOF OF OPEN VIA END SWITCH, EXHAUST FAN SHALL ENERGIZE. REVERSE SHALL OCCUR ONCE THERMOSTAT SETPOINT IS SATISFIED. MINIMUM RUNTIME FOR FAN ONCE ENERGIZED SHALL BE 10 MINUTES.
4. INSTALL EXHAUST FAN & SHUTTER 2'-0" ABOVE BREAKER ROOM INTAKE AND 10'-0" FROM ELECTRICAL ROOM MAKE-UP AIR INTAKE.
5. EXTEND CONDENSATE DRAIN FOR AC-1 TO FLOOR DRAIN IN MECHANICAL ROOM. PROVIDE CONDENSATE TRAP. SEE DETAIL ON DRAWING MC501.
6. SEE CONDENSER AIR OUT AND CONDENSER AIR IN LOUVER DETAILS ON DRAWING MC501.
7. INSTALL FLEXIBLE DUCTWORK CONNECTOR AT LOCATION OF EXPANSION JOINT. COORDINATE LOCATION IN FIELD.
8. HEATER TO BE SURFACE MOUNTED.
9. AC-3 SHALL SHUTDOWN UPON ACTIVATION OF AREA SMOKE DETECTOR IN COMMUNICATIONS ROOM.
10. EXTEND CONDENSATE DRAIN PIPING TO FLOOR DRAIN IN MECHANICAL ROOM. COORDINATE ROUTING IN FIELD.
11. EXTEND CONDENSATE DRAIN FOR AC-2 TO MOP RECEPTOR IN WATER SERVICE ROOM 102. PROVIDE CONDENSATE TRAP. SEE DETAIL ON DRAWING MC501.
12. PROVIDE SUPPLEMENTAL DRAIN PAN UNDER AC-2 WITH SEPARATE DRAIN. EXTEND CONDENSATE DRAIN TO MOP RECEPTOR IN WATER SERVICE ROOM 102.
13. COORDINATE INSTALLATION OF AC-3 WITH COMMUNICATIONS EQUIPMENT TO ALLOW FOR PROPER SERVICE CLEARANCES AROUND UNIT. HATCHED AREA AROUND UNIT INDICATES CLEARANCE REQUIREMENTS.
14. HYDROGEN GAS DETECTOR. STORAGE BATTERY SYSTEMS,INC (SBS) MODEL# HGDI-DR (DUAL RELAY MODEL) WITH HGDI-RM REMOTE DISPLAY PROVIDE MODEL AS INDICATED OR APPROVED EQUAL.
15. 8X8 TRANSFER OPENING WITH MOTORIZED DAMPER AND FIRE DAMPER. MOTORIZED DAMPER SHALL OPEN WHEN EF-3 IS ENERGIZED.

AC-1, AC-2, AC-3 SEQUENCE OF OPERATIONS

FAN CIRCULATION: WHEN THE THERMOSTAT SELECTOR SWITCH IS SET TO THE FAN POSITION, THE EVAPORATOR FAN MOTOR SHALL OPERATE TO PROVIDE AIR CIRCULATION.

COOLING: THE EVAPORATOR FAN SHALL OPERATE CONTINUOUSLY OR WHEN THE COMPRESSOR RUNS, DEPENDING ON THE SETTING OF THE THERMOSTAT FAN SELECTOR SWITCH. WHEN THE THERMOSTAT CLOSES (ON CALL FOR COOLING), THE CONTROL RELAY OUTDOOR-FAN CONTACTOR AND COMPRESSOR CONTACTOR SHALL CLOSE. THE CONTROL RELAY SHALL START THE INDOOR FAN IF IT IS NOT ALREADY RUNNING. THE CONDENSER FAN CONTACTOR SHALL START THE CONDENSER AIR FAN AND THE COMPRESSOR CONTACTORS SHALL IMMEDIATELY START THE COMPRESSORS.

HEATING (AC-1 ONLY) : THE EVAPORATOR FAN SHALL RUN CONTINUOUSLY OR WHEN THE THERMOSTAT CALLS FOR HEATING, DEPENDING ON THE FAN SELECTOR SWITCH. ON A CALL FOR HEATING, THE ASSOCIATED ELECTRIC DUCT COIL SHALL ENERGIZE UPON PROOF OF AIRFLOW. THE ELECTRIC DUCT COIL SHALL DE-ENERGIZE AS THE ROOM TEMPERATURE BECOMES SATISFIED.

LOW AMBIENT CONTROL: LOW AMBIENT CONTROL IS ACCOMPLISHED WITH A FIELD-INSTALLED REFRIGERANT OPERATED DAMPER LOCATED ON THE CONDENSER FAN DISCHARGE.

A 5 MINUTE TIMER SHALL PREVENT THE COMPRESSOR FROM RESTARTING FOR 5 MINUTES AFTER THE COMPRESSOR HAS STOPPED.

SMOKE DETECTOR SHUTDOWN (AC-3 ONLY): UNIT SHALL SHUTDOWN UPON ACTIVIATION OF AREA SMOKE DETECTOR IN COMMUNICATIONS ROOM AND AN ALARM SHALL BE SENT TO FIRE ALARM PANEL.

TWO-POSITION MOTORIZED OA DAMPER SHALL OPEN WHEN UNIT IS ENERGIZED.

EF-1-4 AND PTA 1-3 SEQUENCE OF OPERATIONS

EF-1 (ELECTRICAL ROOM): FAN SHALL BE CONTROLLED VIA ROOM THERMOSTAT TO MAINTAIN 80 DEG.F. (ADJ.) ROOM TEMPERATURE. ON A CALL FROM THE ROOM THERMOSTAT TO ENERGIZE FAN, EXHAUST AND INTAKE MOTORIZED DAMPERS SHALL OPEN. ONCE DAMPERS ARE PROVEN OPEN VIA END SWITCH, EXHAUST FAN SHALL BE ENERGIZED. WHEN ROOM TEMPERATURE IS SATISFIED, EXHAUST FAN SHALL DE-ENERGIZE AND DAMPERS SHALL CLOSE. PROVIDE 2°F DEADBAND (ADJ.).

EF-2 (BREAKER ROOM): FAN SHALL BE CONTROLLED VIA ROOM THERMOSTAT TO MAINTAIN 80 DEG.F. (ADJ.) ROOM TEMPERATURE. ON A CALL FROM THE ROOM THERMOSTAT TO ENERGIZE FAN, EXHAUST AND INTAKE MOTORIZED DAMPERS SHALL OPEN. ONCE DAMPERS ARE PROVEN OPEN VIA END SWITCH, EXHAUST FAN SHALL BE ENERGIZED. WHEN ROOM TEMPERATURE IS SATISFIED, EXHAUST FAN SHALL DE-ENERGIZE AND DAMPERS SHALL CLOSE. PROVIDE 2°F DEADBAND (ADJ.).

EF-3 (BATTERY ROOM): FAN SHALL BE CONTROLLED VIA HYDROGEN GAS DETECTOR. WHEN THE HYDROGEN LEVEL IN THE BATTERY ROOM REACHES 1%, THE EXHAUST FAN SHALL BE ENERGIZED AND MAKE-UP AIR MOTORIZED DAMPER SHALL OPEN. WHEN HYDROGEN LEVEL IN THE BATTERY ROOM REACHES 2%, THE PTAC UNIT SHALL BE DE-ENERGIZED AND AN ALARM SHALL BE SENT TO AN AUTODIALER LOCATED IN THE SECURITY OFFICE TO ALERT MAINTENANCE STAFF. THE HYDROGEN GAS DETECTOR SHALL HAVE A PULSATING WARNING ALARM AND AN LED DISPLAY. A REMOTE LED DISPLAY SHALL ALSO BE LOCATED IN THE SECURITY OFFICE TO INDICATE STATUS OF BATTERY ROOM.

EF-4 (WATER SERVICE ROOM/CUSTODIAL): EXHAUST FAN SHALL RUN CONTINUOUSLY. PROVIDE UNIT MOUNTED FAN SPEED CONTROLLER IN WATER SERVICE ROOM.

PTA-1, 2, & 3: UNIT MOUNTED CONTROLS SHALL MAINTAIN 80°F (ADJ.) IN SPACE DURING COOLING SEASON AND 65°F (ADJ.) DURING HEATING SEASON. BATTERY ROOM SHALL BE MAINTAINED AT 77°F (ADJ.)

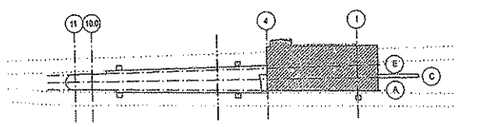

BURT, HILL
650 Smithfield Street Suite 2600 Pittsburgh PA 15222
tel: 412.394.7000 fax: 412.394.7880 www.burthill.com

©2008 Burt Hill

NO.	DATE	DESCRIPTION

REVISIONS

THE PREPARATION OF THIS DRAWING HAS BEEN FINANCED, IN PART, THROUGH A GRANT FROM THE U. S. DEPARTMENT OF TRANSPORTATION, FEDERAL TRANSIT ADMINISTRATION UNDER THE URBAN MASS TRANSPORTATION ACT OF 1964, AS AMENDED.

COMMONWEALTH OF PENNSYLVANIA — REGISTERED PROFESSIONAL — ROBERT J. GRAF — ENGINEER — 054572-E

SIGNATURE

DMJM HARRIS | AECOM
FOUR GATEWAY CENTER
20TH FLOOR
PITTSBURGH, PA. 15222

APPROVED — DATE 04/04/08

DESIGNED	WAK
DRAWN	WAK
CHECKED	TRB
IN CHARGE	SA
DATE	4/04/08
SCALE	0 2' 4' 8' 12'

PORT AUTHORITY OF ALLEGHENY COUNTY
PITTSBURGH PENNSYLVANIA

NORTH SHORE CONNECTOR
ALLEGHENY STATION
PARTIAL STREET LEVEL HVAC PLAN - WEST

Port Authority

CONTRACT NO.	NSC-012-H		
DWG. NO.	MC102	SHT.	153

4/14/2008 10:55:26 AM
N:\BIM\NSC\07 CAD\Sheet - Mechanical\NSMC102.DGN

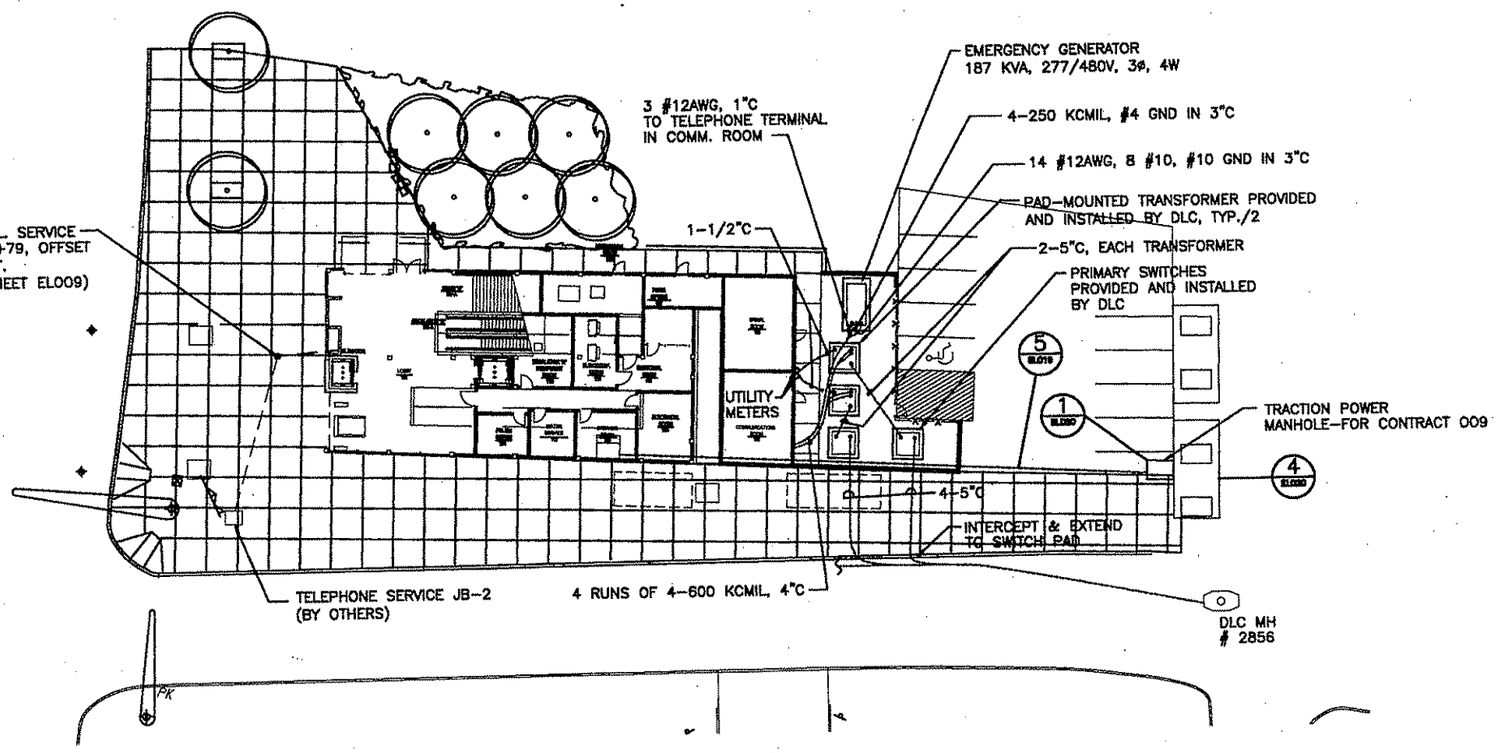

BURT, HILL SANTANGELO & LINDSAY, INC.
CONSULTING ENGINEERS
650 Smithfield Street Suite 2600 Pittsburgh PA 15222
tel: 412.394.7000 fax: 412.394.7880 www.burthill.com

©2006 Burt Hill

307 EIGHTH STREET
NEW BRIGHTON, PA 15066
PHONE: (724) 847-0407
FAX: (724) 847-0873

NO.	DATE	DESCRIPTION

REVISIONS

THE PREPARATION OF THIS DRAWING HAS BEEN FINANCED, IN PART, THROUGH A GRANT FROM THE U. S. DEPARTMENT OF TRANSPORTATION, FEDERAL TRANSIT ADMINISTRATION UNDER THE URBAN MASS TRANSPORTATION ACT OF 1964, AS AMENDED.

SIGNATURE

DMJM HARRIS | AECOM
FOUR GATEWAY CENTER
20TH FLOOR
PITTSBURGH, PA. 15222

APPROVED — DATE 04/04/06

DESIGNED	GMF
DRAWN	JEM
CHECKED	JVS
IN CHARGE	CML
DATE	4/04/06
SCALE	1"=30'
FEET	30 20 10 0

PORT AUTHORITY OF ALLEGHENY COUNTY
PITTSBURGH PENNSYLVANIA

NORTH SHORE CONNECTOR
ALLEGHENY STATION
ELECTRICAL
SITE PLAN

Port Authority

CONTRACT NO. NSC-012
DWG. NO. EL002 SHT. 167

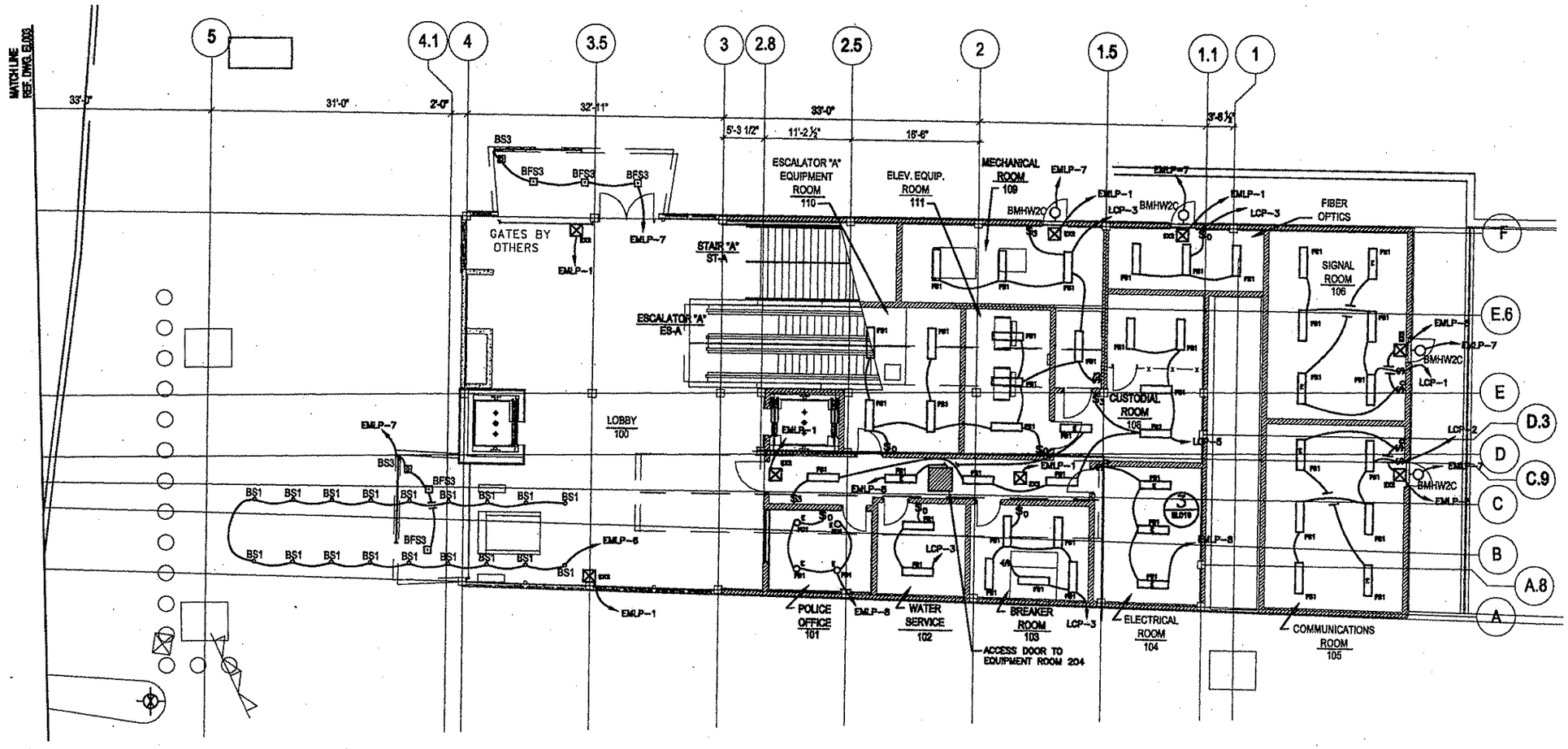

BURT, HILL SANTANGELO & LINDSAY, INC.
CONSULTING ENGINEERS

650 Smithfield Street Suite 2600 Pittsburgh PA 15222
tel: 412.394.7000 fax: 412.394.7080 www.burthill.com
©2006 Burt Hill

307 EIGHTH STREET
NEW BRIGHTON, PA 15066
PHONE: (724) 847-0407
FAX: (724) 847-0673

NO.	DATE	DESCRIPTION

REVISIONS

THE PREPARATION OF THIS DRAWING HAS BEEN FINANCED, IN PART, THROUGH A GRANT FROM THE U. S. DEPARTMENT OF TRANSPORTATION, FEDERAL TRANSIT ADMINISTRATION UNDER THE URBAN MASS TRANSPORTATION ACT OF 1964, AS AMENDED.

SIGNATURE

DMJM HARRIS | AECOM
FOUR GATEWAY CENTER
20TH FLOOR
PITTSBURGH, PA. 15222

APPROVED — DATE 04/04/08

DESIGNED	GMF
DRAWN	JEM
CHECKED	JVS
IN CHARGE	CML
DATE	4/04/08
SCALE	0 4 8 FEET 1/8"=1'-0"

PORT AUTHORITY OF ALLEGHENY COUNTY
PITTSBURGH PENNSYLVANIA

NORTH SHORE CONNECTOR
ALLEGHENY STATION
STREET LEVEL
LIGHTING PLAN - WEST

Port Authority

CONTRACT NO. NSC-012
DWG. NO. EL004 SHT. 169

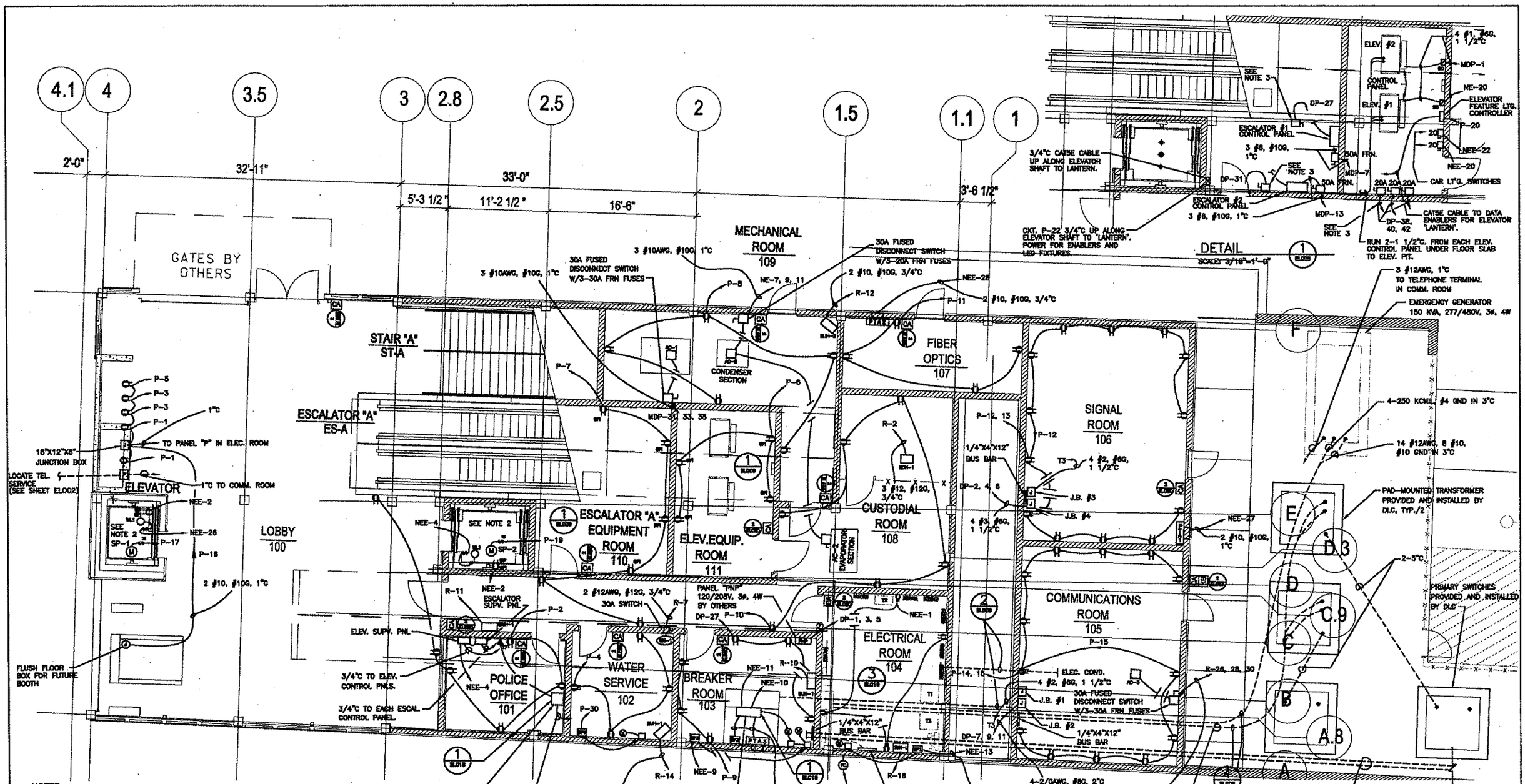

NOTES:

1. SEE MECHANICAL DRAWINGS FOR EXACT LOCATIONS OF MECHANICAL EQUIPMENT.
2. GFCI RECEPTACLE, LIGHT, AND SWITCH IN PIT WILL BE WEATHERPROOF. ALSO PROVIDE WP GFCI RECEPTACLE AND WORKLIGHT AT TOP OF CARS.
3. HTR. DISC. SWITCH 30A W/ 20A FRN.

BURT, HILL SANTANGELO & LINDSAY, INC.
CONSULTING ENGINEERS
650 Smithfield Street Suite 2600 Pittsburgh PA 15222
tel: 412.394.7000 fax: 412.394.7880 www.burthill.com
©2008 Burt Hill
307 EIGHTH STREET
NEW BRIGHTON, PA 15066
PHONE: (724) 847-0407
FAX: (724) 847-0673

NO.	DATE	DESCRIPTION

REVISIONS

THE PREPARATION OF THIS DRAWING HAS BEEN FINANCED, IN PART, THROUGH A GRANT FROM THE U. S. DEPARTMENT OF TRANSPORTATION, FEDERAL TRANSIT ADMINISTRATION UNDER THE URBAN MASS TRANSPORTATION ACT OF 1964, AS AMENDED.

SIGNATURE

DMJM HARRIS | AECOM
FOUR GATEWAY CENTER
20TH FLOOR
PITTSBURGH, PA. 15222

APPROVED — DATE 08/04/08

DESIGNED	GMF
DRAWN	JEM
CHECKED	JVS
IN CHARGE	CML
DATE	4/04/08
SCALE	3/16"=1'-0"

PORT AUTHORITY OF ALLEGHENY COUNTY
PITTSBURGH PENNSYLVANIA

NORTH SHORE CONNECTOR
ALLEGHENY STATION
STREET LEVEL
POWER PLAN - WEST

Port Authority

CONTRACT NO. NSC-012
DWG. NO. EL009 SHT. 174

LEGEND

- PAAC TELEPHONE (POTS)
- PASSENGER EMERGENCY TELEPHONE (AUTOMATIC RINGDOWN)
- CCTV CAMERA
- REMOTE TERMINAL UNIT
- CCTV CAMERA (PAN–TILT–ZOOM)
- SPEAKER (WALL MOUNTED)
- SPEAKER (BI–DIRECTIONAL)
- AMBIENT NOISE SENSOR
- VARIABLE MESSAGE SIGN (DOUBLE–SIDED)
- ELEVATOR EMERGENCY PHONE
- SMOKE DETECTOR
- ANNUNCIATOR PANEL
- FIRE ALARM CONTROL PANEL
- HEAT DETECTOR
- HORN–STROBE
- STROBE
- FIRE ALARM PULLSTATION
- PREACTION SYSTEM SMOKE DETECTOR
- WATERFLOW/TAMPER SWITCH
- ADDRESSABLE RELAY MODULE
- DESTINATION DIRECTIONAL OVERHEAD SIGN
- PUBLIC ADDRESS INPUT JACK

NOTES:

1. CONDUIT SHALL TERMINATE IN A FLUSH MOUNTED BOX AT THE LOCATION SHOWN ON THE DRAWINGS. THE VERTICAL CENTER OF THE BOX SHALL BE LOCATED 54" ABOVE THE FINISHED FLOOR.
2. RUN CONDUIT FOR ELEVATOR PHONES TO ELEVATOR SHAFT.
3. TERMINATE CONDUIT AT FIRE ALARM ANNUNCIATOR PANEL ADJACENT TO EAST ELEVATOR.
4. A SEPARATE 1" POWER CONDUIT IS REQUIRED FOR ALL CCTV CAMERAS.
5. SIZING FOR POWER WIRING SHALL BE:
   - –WIRE #12 AWG MINIMUM FOR CIRCUITS LESS THAN 100 FEET IN LENGTH.
   - –WIRE #10 AWG MINIMUM FOR CIRCUITS FROM 100 FEET TO 150 FEET IN LENGTH.
   - –WIRE #8 AWG MINIMUM FOR CIRCUITS FROM 150 FEET TO 250 FEET IN LENGTH.
6. DAISY CHAIN COLUMN AND WALL MOUNTED SPEAKERS INTO ONE ZONE.
7. SEE ARCHITECTURAL DRAWINGS FOR EXACT LOCATIONS OF COMMUNICATION EQUIPMENT AND FOR MOUNTING DETAILS.
8. PROVIDE TWO 2" CONDUITS FROM COMMUNICATIONS ROOM TO LANTERN AT TOP OF ELEVATOR NO. 1 STRUCTURE. MINIMUM SWEEP RADIUS WILL BE 24". MAXIMUM OF 360° OF BENDS WITHOUT A PULL BOX. ANTENNA WILL BE MOUNTED OVER THE "LANTERN" AT TOP OF ELEVATOR TOWER CONTRACT 009. PROVIDE 200 POUND PULL ROPE IN EACH CONDUIT.

TO/FROM CONDUIT LIST FOR STREET LEVEL (COMMUNICATIONS)

CONDUITS	LOAD	# OF CONDUITS	CONDUIT SIZE	DESTINATION	ORIGIN
C–43	SPEAKERS 7, 7A 8, 8A	1	1 INCH	LOBBY 100	COMMUNICATION ROOM
C–44	PASSENGER EMER. PHONE #3	1	1 INCH	LOBBY 100	COMMUNICATION ROOM
C–45	ELEVATOR EMER. PHONE	1	1 INCH	LOBBY 100	COMMUNICATION ROOM
C–46 & C–47	CCTV #2	2	1 INCH	LOBBY 100	COMMUNICATION ROOM
C–48	SIGNS B–1, B–2	1	1 INCH	LOBBY 100	COMMUNICATION ROOM
C–49	CCTV #9	2	1 INCH	LOBBY 100	COMMUNICATION ROOM
C–50	CCTV #1	2	1 INCH	LOBBY 100	COMMUNICATION ROOM
C–51	ELEV. EMER. PHONE	1	1 INCH	LOBBY 100	COMMUNICATION ROOM
C–52	PUBLIC ADDRESS INPUT JACK	1	1 INCH	LOBBY 100	COMMUNICATION ROOM
C–53	PAAC PHONE (POTS) 17	1	1 INCH	LOBBY 100	COMMUNICATION ROOM
C–54	RTU #2	1	1 INCH	LOBBY 100	COMMUNICATION ROOM
C–55	PAAC PHONE (POTS) T4	1	1 INCH	LOBBY 100	COMMUNICATION ROOM
C–56	PAAC PHONE T5	1	1 INCH	LOBBY 100	COMMUNICATION ROOM
C–57	RTU #1	1	1 INCH	LOBBY 100	COMMUNICATION ROOM
C–58	PAAC PHONE T1	1	1 INCH	LOBBY 100	COMMUNICATION ROOM
C–59	PAAC PHONE T8	1	1 INCH	LOBBY 100	COMMUNICATION ROOM
C–60	PAAC PHONE T2	1	1 INCH	LOBBY 100	COMMUNICATION ROOM
C–61	PAAC PHONE T3	1	1 INCH	LOBBY 100	COMMUNICATION ROOM
C–62	PAAC PHONE T9	1	1 INCH	LOBBY 100	COMMUNICATION ROOM
C–63	FIRE ALARM PANEL	1	1 INCH	POLICE OFFICE 101	COMMUNICATION ROOM

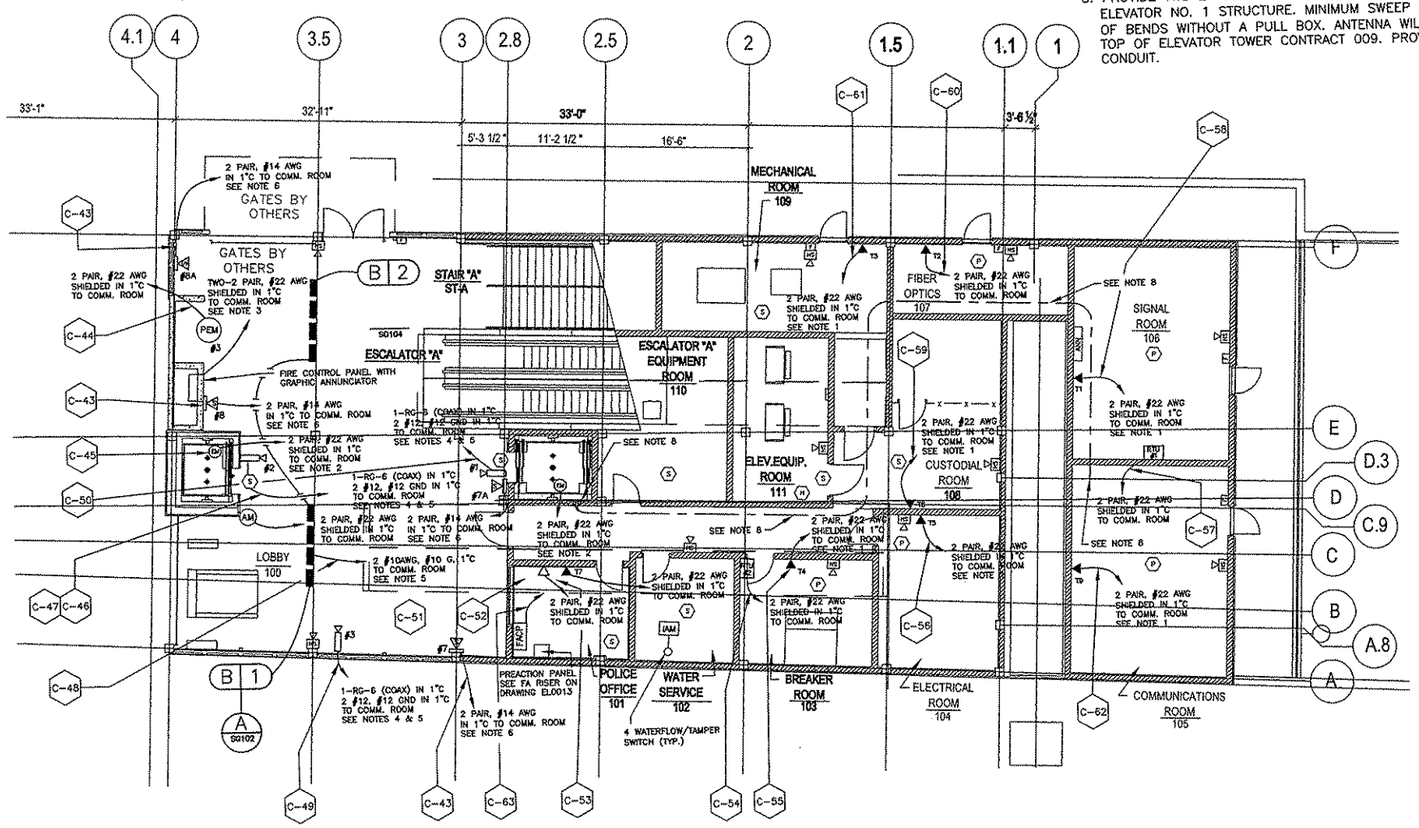

BURT, HILL SANTANGELO & LINDSAY, INC.
CONSULTING ENGINEERS
650 Smithfield Street Suite 2600 Pittsburgh PA 15222
tel: 412.394.7000 fax: 412.394.7800 www.burthill.com
©2006 Burt Hill
307 EIGHTH STREET
NEW BRIGHTON, PA 15066
PHONE: (724) 847–0407
FAX: (724) 847–0573

NO.	DATE	DESCRIPTION

REVISIONS

THE PREPARATION OF THIS DRAWING HAS BEEN FINANCED, IN PART, THROUGH A GRANT FROM THE U. S. DEPARTMENT OF TRANSPORTATION, FEDERAL TRANSIT ADMINISTRATION UNDER THE URBAN MASS TRANSPORTATION ACT OF 1964, AS AMENDED.

SIGNATURE

DMJM HARRIS | AECOM
FOUR GATEWAY CENTER
20TH FLOOR
PITTSBURGH, PA. 15222

APPROVED — DATE 04/04/08

DESIGNED	GMF
DRAWN	JEM
CHECKED	JVS
IN CHARGE	CML
DATE	4/04/08
SCALE	0 4 8 FEET 1/8"=1'-0"

PORT AUTHORITY OF ALLEGHENY COUNTY
PITTSBURGH PENNSYLVANIA

NORTH SHORE CONNECTOR
ALLEGHENY STATION
STREET LEVEL
COMMUNICATIONS PLAN - WEST

Port Authority

CONTRACT NO. NSC-012
DWG. NO. EL012 SHT. 177

SYMBOL	DEVICE	MOUNTING HEIGHT
F	FIRE ALARM PULLSTATION	44" AFF
H	HORN (AUDIBLE SIGNAL)	8'-0" AFF/4" BELOW CEILING
S	STROBE (VISUAL SIGNAL)	8'-0" AFF/4" BELOW CEILING
HS	AUDIBLE/VISUAL SIGNAL	8'-0" AFF/4" BELOW CEILING
S	SMOKE DETECTOR	CEILING/OR WALL, 4" BELOW CEILING
H	HEAT DETECTOR	CEILING/OR WALL, 4" BELOW CEILING
ANN	ANNUNCIATOR PANEL	TOP 60" AFF
FACP	FIRE ALARM CONTROL PANEL	TOP 72" AFF
P	PREACTION SYSTEM SMOKE DETECTOR	CEILING

NOTE:

1. REFERENCE COMMUNICATION PLAN NOTES ON EL012.

TO/FROM CONDUIT LIST FOR MEZZANINE LEVEL (COMMUNICATIONS)

CONDUITS	LOAD	# OF CONDUITS	CONDUIT SIZE	DESTINATION	ORIGIN
C-30 & C-31	CCTV #6	2	1 INCH	MEZZANINE CEILING VIA BREAKER ROOM	COMMUNICATION ROOM
C-32 & C-33	CCTV #4	2	1 INCH	MEZZANINE CEILING VIA BREAKER ROOM	COMMUNICATION ROOM
C-34 & C-35	CCTV #5	2	1 INCH	MEZZANINE CEILING VIA BREAKER ROOM	COMMUNICATION ROOM
C-36 & C-37	CCTV #7	2	1 INCH	MEZZANINE CEILING VIA BREAKER ROOM	COMMUNICATION ROOM
C-38 & C-39	CCTV #8	2	1 INCH	MEZZANINE CEILING VIA BREAKER ROOM	COMMUNICATION ROOM
C-40	SPEAKERS #5 & #6	1	1 INCH	MEZZANINE WEST WALL VIA BREAKER ROOM	COMMUNICATION ROOM
C-41	B-3, B-4	1	1 INCH	MEZZANINE WEST WALL VIA BREAKER ROOM	COMMUNICATION ROOM
C-42	PASSENGER EMER. PHONE #4	1	1 INCH	MEZZANINE WEST WALL VIA BREAKER ROOM	COMMUNICATION ROOM

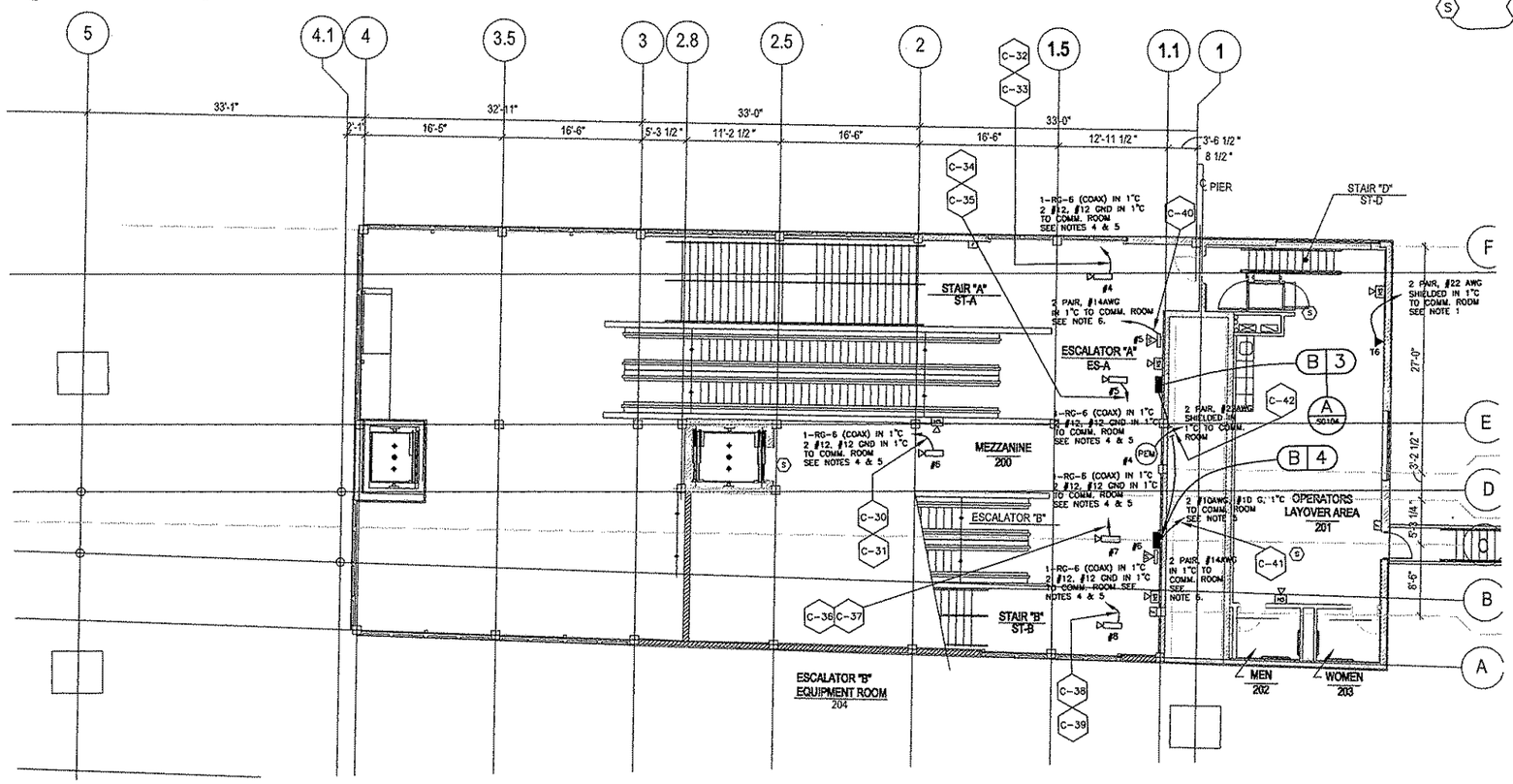

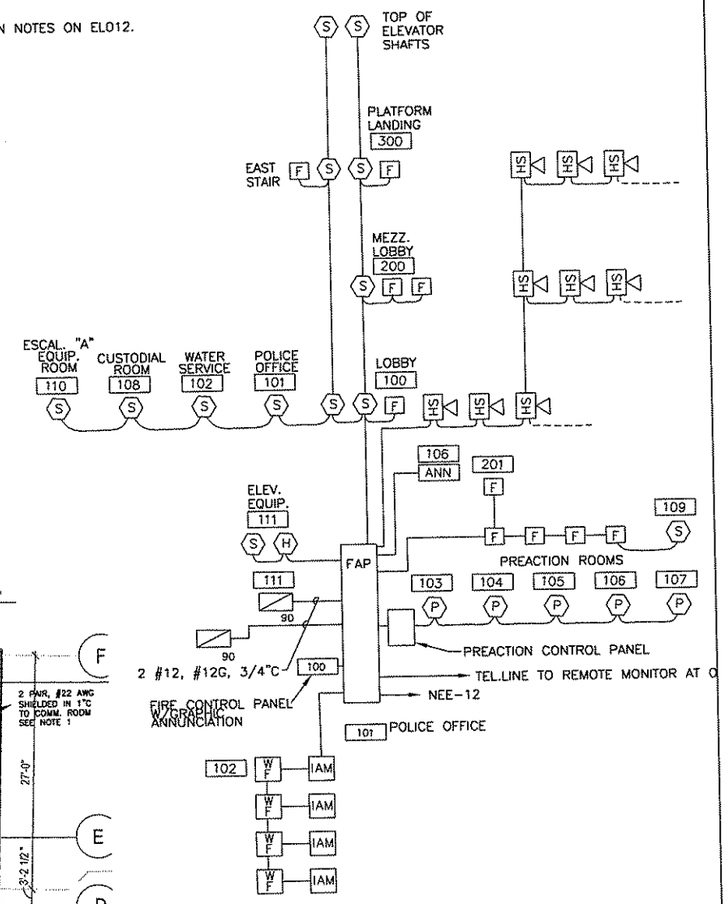

FIRE ALARM SYSTEM RISER

NTS

NOTE:

1. SYSTEM SHALL MEET REQUIREMENTS OF ANSI 117.1, ELEV. SAFETY CODE AND SMOKE DETECTION SYSTEM.
2. ACTIVATION OF PREACTION SMOKE DETECTORS IN COMMUNICATIONS ROOM 106 SHALL CAUSE SHUTDOWN OF HVAC EQUIPMENT AC-3, WITH CONTROL WIRING BY HVAC CONTRACTOR.

BURT, HILL SANTANGELO & LINDSAY, INC.
CONSULTING ENGINEERS
650 Smithfield Street Suite 2600 Pittsburgh PA 15222
tel: 412.394.7000 fax: 412.394.7880 www.burthill.com
307 EIGHTH STREET
NEW BRIGHTON, PA 15066
PHONE: (724) 847-0407
FAX: (724) 847-0673

©2006 Burt Hill

NO.	DATE	DESCRIPTION

REVISIONS

THE PREPARATION OF THIS DRAWING HAS BEEN FINANCED, IN PART, THROUGH A GRANT FROM THE U. S. DEPARTMENT OF TRANSPORTATION, FEDERAL TRANSIT ADMINISTRATION UNDER THE URBAN MASS TRANSPORTATION ACT OF 1964, AS AMENDED.

SIGNATURE

DMJM HARRIS | AECOM
FOUR GATEWAY CENTER
20TH FLOOR
PITTSBURGH, PA. 15222

APPROVED — DATE 04/09/08

DESIGNED	GMF
DRAWN	JEM
CHECKED	JVS
IN CHARGE	CML
DATE	4/04/08
SCALE	0 4 8 FEET 1/8"=1'-0"

PORT AUTHORITY OF ALLEGHENY COUNTY
PITTSBURGH PENNSYLVANIA

NORTH SHORE CONNECTOR
ALLEGHENY STATION
MEZZANINE LEVEL
COMMUNICATIONS PLAN - WEST

Port Authority

CONTRACT NO. NSC-012
DWG. NO. EL013 SHT. 178

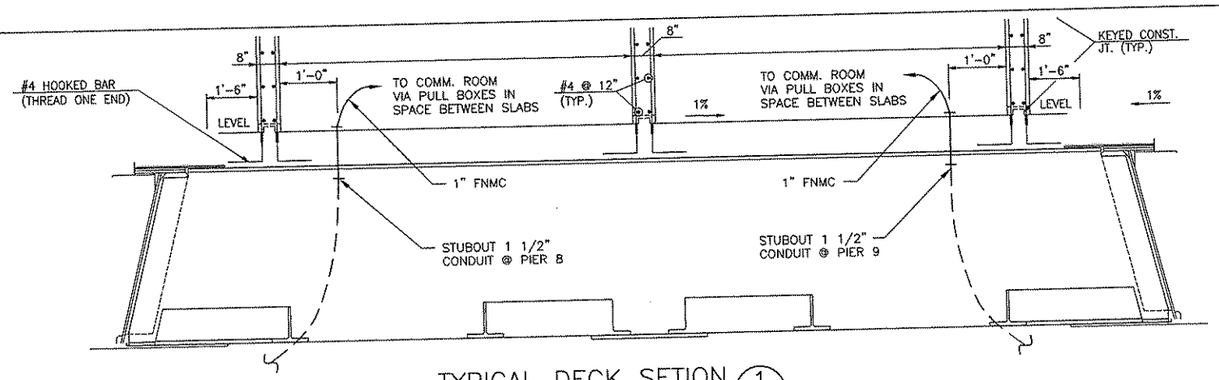

TYPICAL DECK SETION 1 EL009

NOTE:

1. REFERENCE COMMUNICATION PLAN NOTES ON EL012.

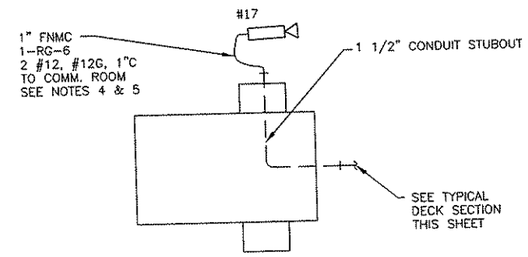

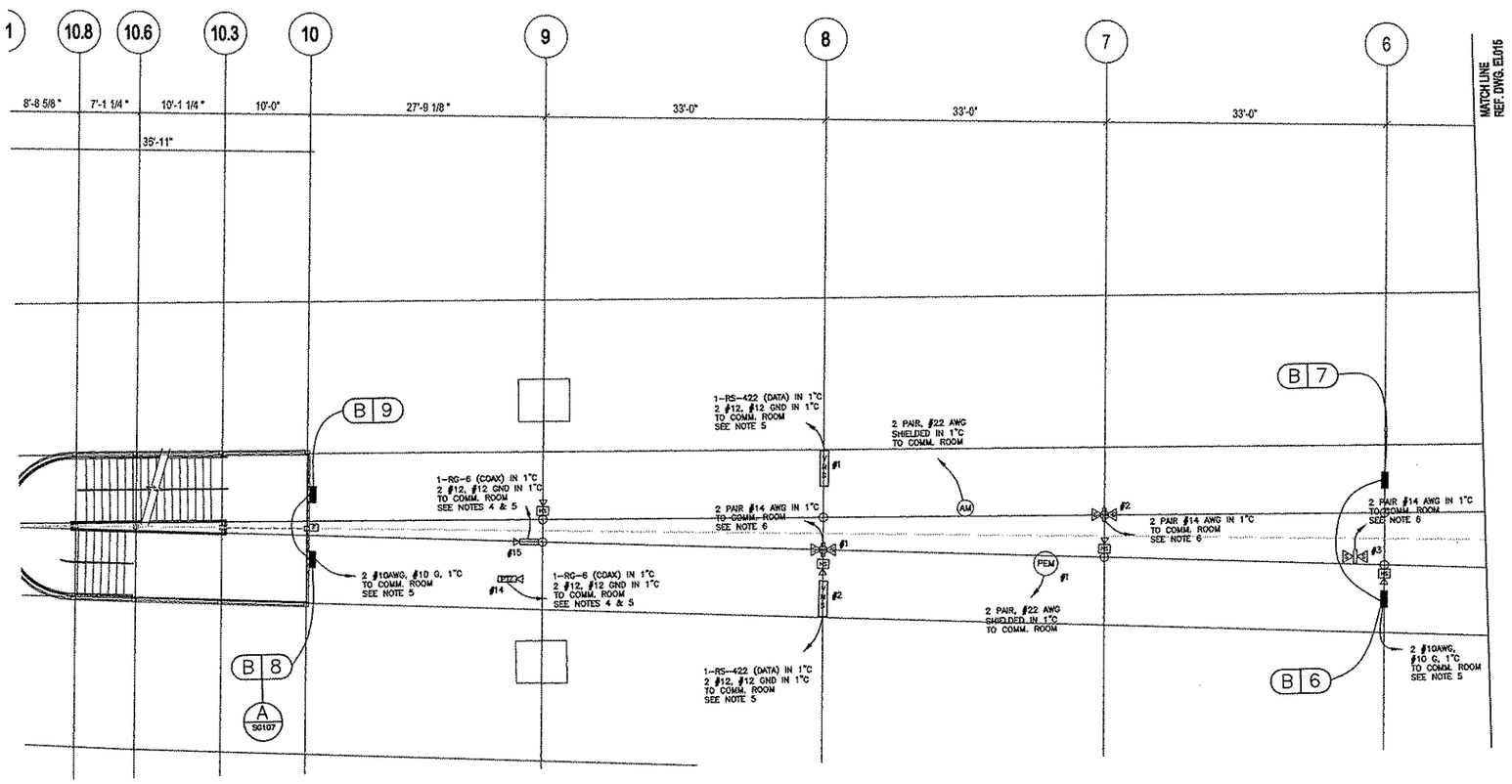

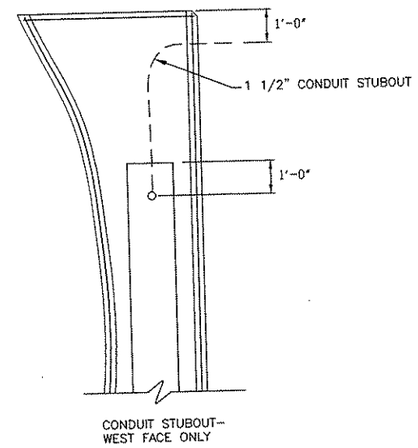

PIER NO. 8 ELEVATION DETAIL

NTS

BURT, HILL SANTANGELO & LINDSAY, INC.
CONSULTING ENGINEERS
650 Smithfield Street Suite 2600 Pittsburgh PA 15222
tel: 412.394.7000 fax: 412.394.7880 www.burthill.com
©2006 Burt Hill
307 EIGHTH STREET
NEW BRIGHTON, PA 15066
PHONE: (724) 847-0407
FAX: (724) 847-0673

NO.	DATE	DESCRIPTION

REVISIONS

THE PREPARATION OF THIS DRAWING HAS BEEN FINANCED, IN PART, THROUGH A GRANT FROM THE U. S. DEPARTMENT OF TRANSPORTATION, FEDERAL TRANSIT ADMINISTRATION UNDER THE URBAN MASS TRANSPORTATION ACT OF 1964, AS AMENDED.

SIGNATURE

DMJM HARRIS | AECOM
FOUR GATEWAY CENTER
20TH FLOOR
PITTSBURGH, PA. 15222

APPROVED — DATE 04/04/08

DESIGNED	GMF
DRAWN	JEM
CHECKED	JVS
IN CHARGE	CML
DATE	4/04/08
SCALE	0 4 8 FEET 1/8"=1'-0"

PORT AUTHORITY OF ALLEGHENY COUNTY
PITTSBURGH PENNSYLVANIA

NORTH SHORE CONNECTOR
ALLEGHENY STATION
PLATFORM LEVEL
COMMUNICATIONS PLAN - EAST

Port Authority

CONTRACT NO. NSC-012

DWG. NO. EL014 SHT. 179

NOTE:

1. REFERENCE COMMUNICATION PLAN NOTES ON EL012.

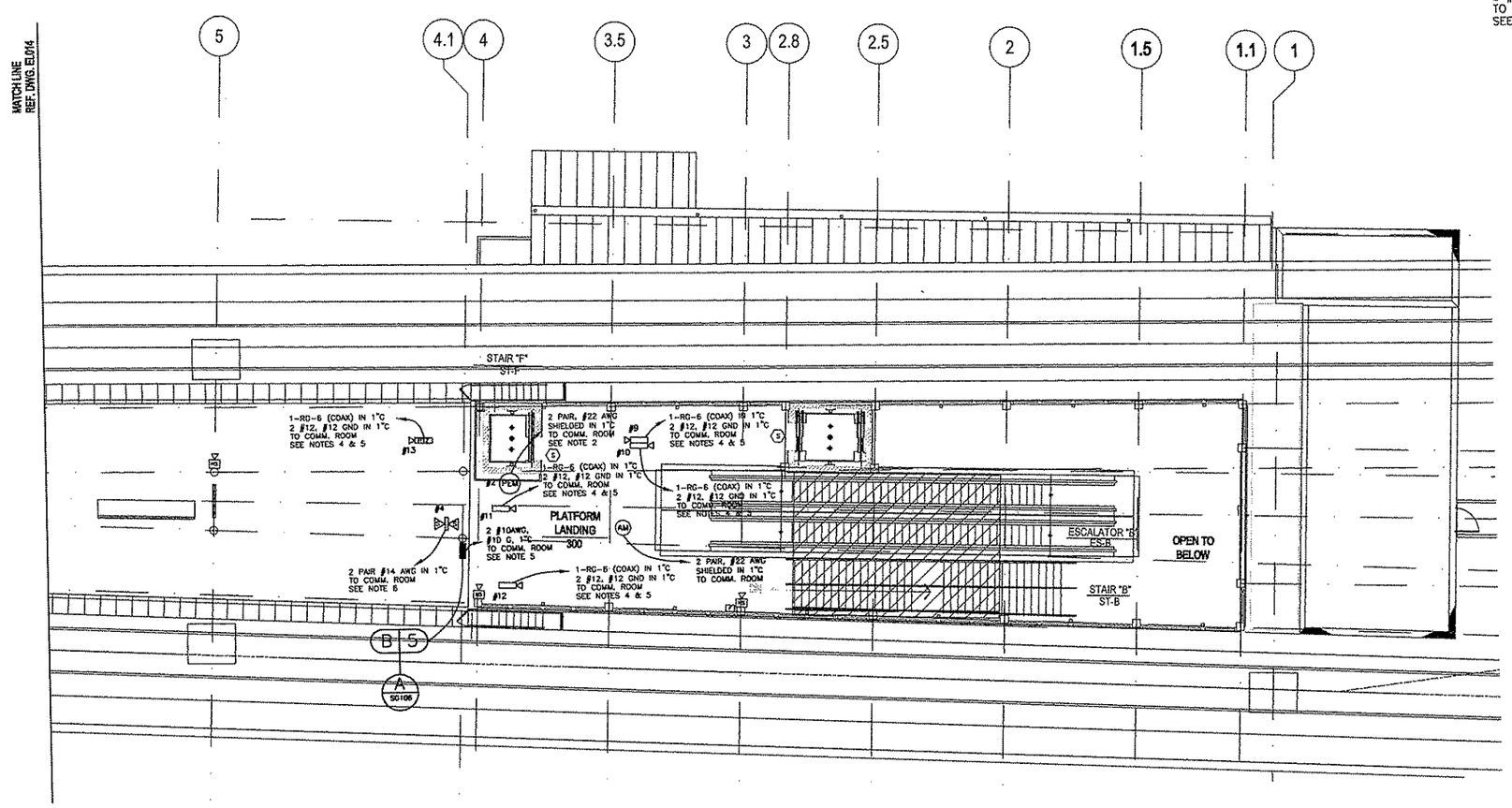

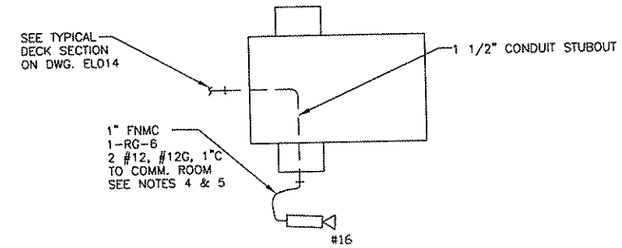

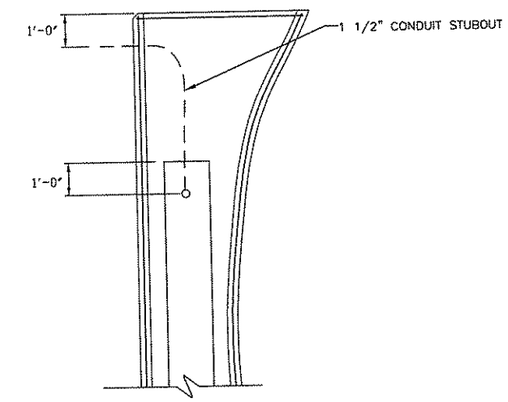

PIER NO. 9 ELEVATION DETAIL

NTS

BURT, HILL SANTANGELO & LINDSAY, INC.
CONSULTING ENGINEERS
650 Smithfield Street Suite 2600 Pittsburgh PA 15222
tel: 412.394.7000 fax: 412.394.7880 www.burthill.com
©2006 Burt Hill
307 EIGHTH STREET
NEW BRIGHTON, PA 15066
PHONE: (724) 847-0407
FAX: (724) 847-0673

NO.	DATE	DESCRIPTION

REVISIONS

THE PREPARATION OF THIS DRAWING HAS BEEN FINANCED, IN PART, THROUGH A GRANT FROM THE U. S. DEPARTMENT OF TRANSPORTATION, FEDERAL TRANSIT ADMINISTRATION UNDER THE URBAN MASS TRANSPORTATION ACT OF 1964, AS AMENDED.

SIGNATURE

DMJM HARRIS | AECOM
FOUR GATEWAY CENTER
20TH FLOOR
PITTSBURGH, PA. 15222

APPROVED — DATE 01/09/08

DESIGNED	GMF
DRAWN	JEM
CHECKED	JVS
IN CHARGE	CML
DATE	4/04/05
SCALE	0 4 8 FEET 1/8"=1'-0"

PORT AUTHORITY OF ALLEGHENY COUNTY
PITTSBURGH PENNSYLVANIA

NORTH SHORE CONNECTOR
ALLEGHENY STATION
PLATFORM LEVEL
COMMUNICATIONS PLAN - WEST

Port Authority

CONTRACT NO. NSC-012
DWG. NO. EL015 SHT. 180

NOTES:

1. PANEL "PNP" AND FEEDERS BY OTHERS. PROVIDE CONDUIT UNDER SLAB FROM PANEL "DP".

LEGEND:

- EMERGENCY GENERATOR
- ESCALATOR/ELEVATOR MOTOR
- PHOTOELECTRIC CELL
- TVSS — TRANSIENT VOLTAGE SURGE SUPPRESSOR
- TRANSFORMER
- CIRCUIT BREAKER

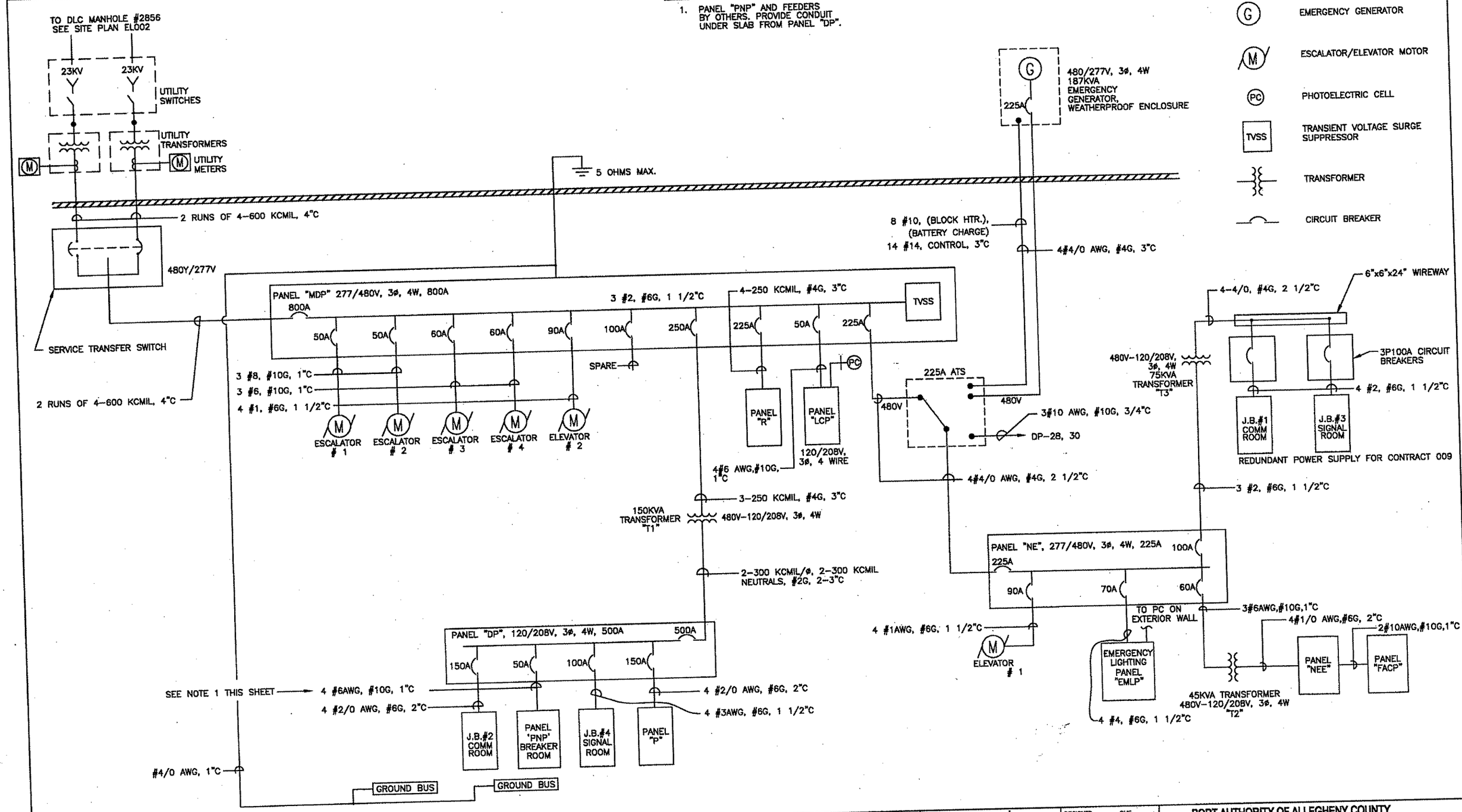

BURT, HILL SANTANGELO & LINDSAY, INC.
CONSULTING ENGINEERS
650 Smithfield Street Suite 2500 Pittsburgh PA 15222
tel: 412.394.7900 fax: 412.394.7880 www.burthill.com
©2008 BurtHill
307 EIGHTH STREET
NEW BRIGHTON, PA 15066
PHONE: (724) 847-0407
FAX: (724) 847-0573

NO.	DATE	DESCRIPTION

REVISIONS

THE PREPARATION OF THIS DRAWING HAS BEEN FINANCED, IN PART, THROUGH A GRANT FROM THE U. S. DEPARTMENT OF TRANSPORTATION, FEDERAL TRANSIT ADMINISTRATION UNDER THE URBAN MASS TRANSPORTATION ACT OF 1964, AS AMENDED.

SIGNATURE

DMJM HARRIS | AECOM
FOUR GATEWAY CENTER
20TH FLOOR
PITTSBURGH, PA. 15222

APPROVED — DATE 04/04/08

DESIGNED	GMF
DRAWN	JEM
CHECKED	JVS
IN CHARGE	CML
DATE	4/04/08
SCALE	NTS

PORT AUTHORITY OF ALLEGHENY COUNTY
PITTSBURGH PENNSYLVANIA

NORTH SHORE CONNECTOR
ALLEGHENY STATION
ELECTRICAL DIAGRAMS AND SCHEDULES

Port Authority

CONTRACT NO. NSC-012
DWG. NO. EL016 SHT. 181

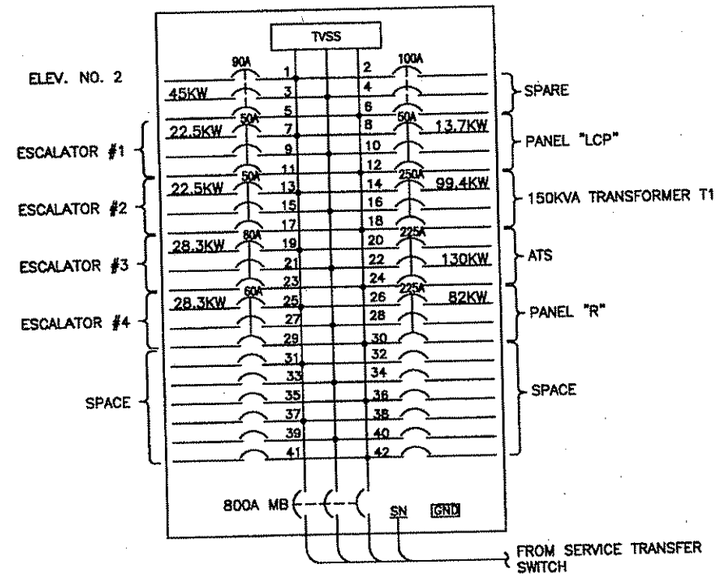

PANEL "MDP"

277/480V,3ø,4W
LOCATED IN ELECTRIC RM.

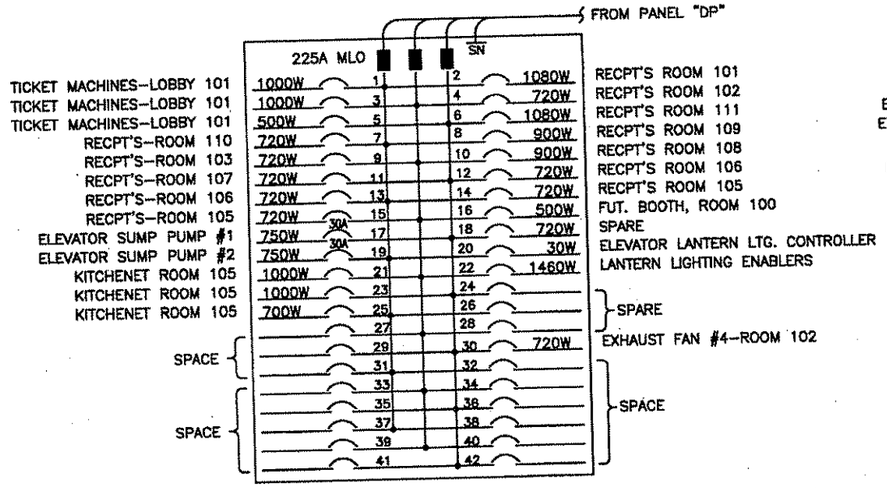

PANEL "P"

120/208V,3ø,4W
LOCATED IN ELECTRIC RM.

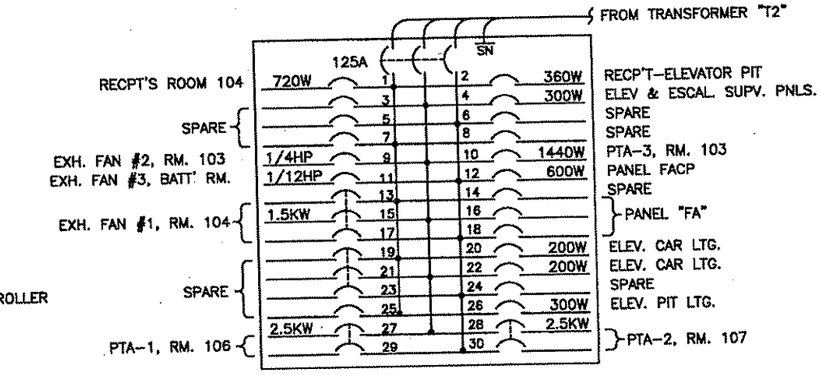

PANEL "NEE"

120/208V,3ø,4W
LOCATED IN ELECTRIC RM.

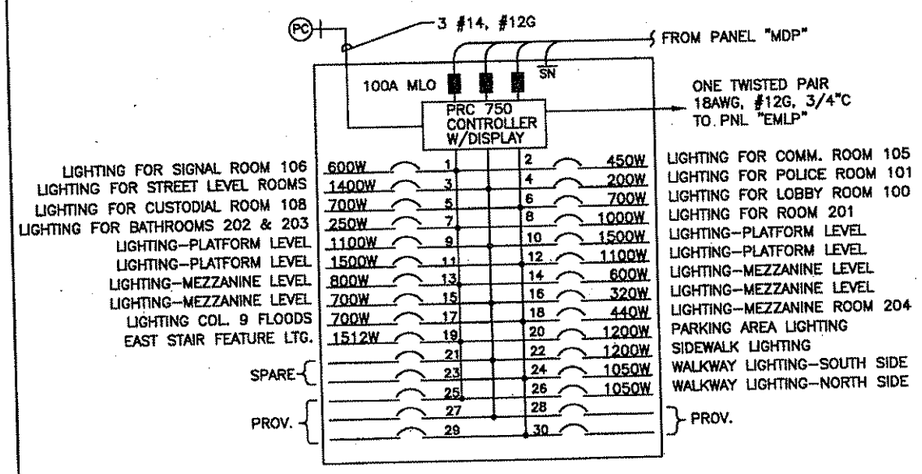

PANEL "LCP"

277/480V,3ø,4W
LOCATED IN ELECTRIC RM.

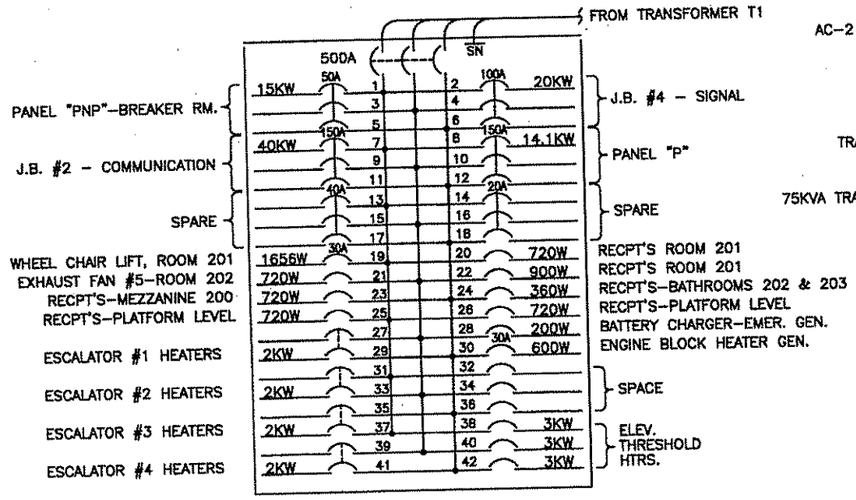

PANEL "DP"

120/208V,3ø,4W
LOCATED IN ELECTRIC RM.

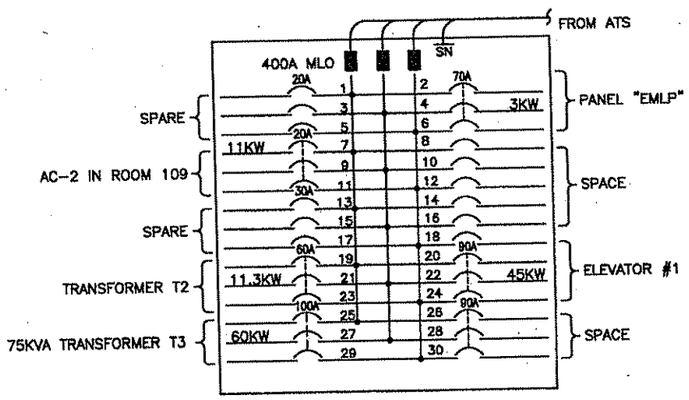

PANEL "NE"

277/480V,3ø,4W
LOCATED IN ELECTRIC RM.

* PROVIDE LIGHTING CONTROL PANEL WITH PRC750 SYSTEM CONTROLLER AND PROGRAMMING.
C-H EATON POWER COMMAND OR APPR. EQUAL

NOTE: ALL CIRCUIT BREAKERS 20A TYPE GHQRSP1020 UNLESS INDICATED OTHERWISE

BURT, HILL SANTANGELO & LINDSAY, INC.
CONSULTING ENGINEERS
650 Smithfield Street Suite 2600 Pittsburgh PA 15222
tel: 412.394.7000 fax: 412.394.7880 www.burthill.com
307 EIGHTH STREET
NEW BRIGHTON, PA 15066
PHONE: (724) 847-0407
FAX: (724) 847-0673

©2005 Burt Hill

NO.	DATE	DESCRIPTION

REVISIONS

THE PREPARATION OF THIS DRAWING HAS BEEN FINANCED, IN PART, THROUGH A GRANT FROM THE U. S. DEPARTMENT OF TRANSPORTATION, FEDERAL TRANSIT ADMINISTRATION UNDER THE URBAN MASS TRANSPORTATION ACT OF 1964, AS AMENDED.

SIGNATURE

DMJM HARRIS | AECOM
FOUR GATEWAY CENTER
20TH FLOOR
PITTSBURGH, PA. 15222
APPROVED
04/04/06
DATE

DESIGNED	GMF
DRAWN	JEM
CHECKED	JVS
IN CHARGE	CML
DATE	4/04/06
SCALE	NTS

PORT AUTHORITY OF ALLEGHENY COUNTY
PITTSBURGH PENNSYLVANIA

NORTH SHORE CONNECTOR
ALLEGHENY STATION

ELECTRICAL DIAGRAMS AND SCHEDULES

Port Authority

CONTRACT NO. NSC-012
DWG. NO. EL017 SHT. 182

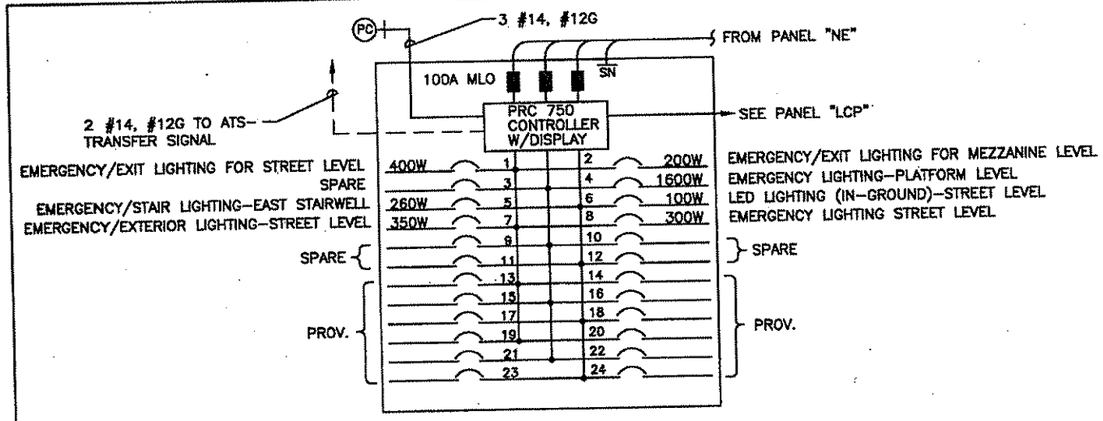

PANEL "EMLP"

277/480V,3ø,4W
LOCATED IN ELECTRIC RM.

* PROVIDE LIGHTING CONTROL PANEL WITH PRC750 SYSTEM CONTROLLER AND PROGRAMMING.
C-H EATON POWER COMMAND OR APPR. EQUAL

NOTE: ALL CIRCUIT BREAKERS 20A TYPE GHQRSP1020 UNLESS INDICATED OTHERWISE

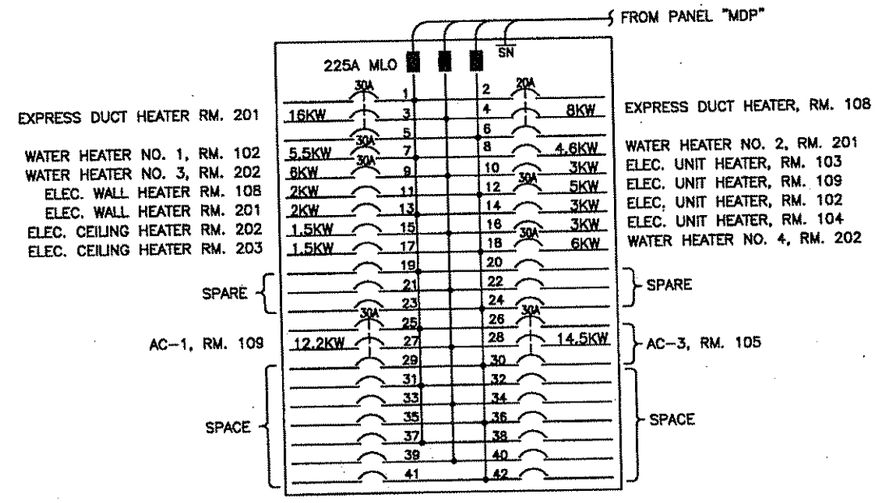

PANEL "R"

277/480V,3ø,4W
LOCATED IN ELECTRIC RM.

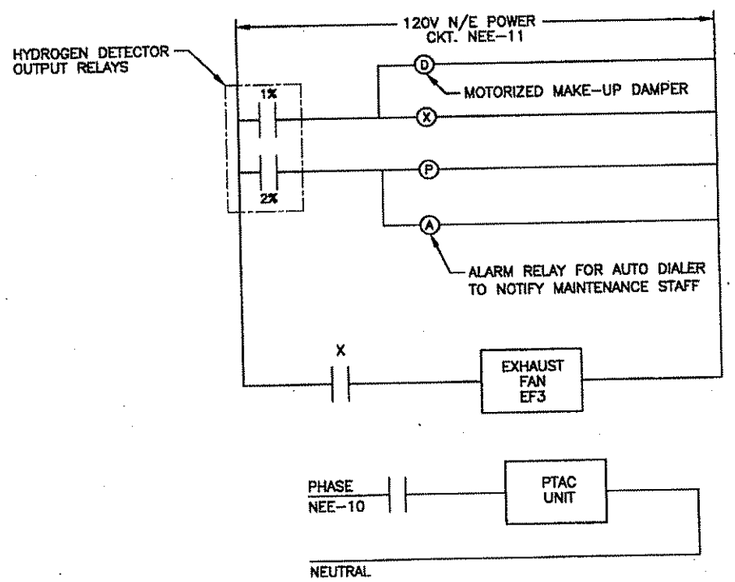

HYDROGEN MONITOR WIRING DIAGRAM

1 / E1.009

NTS

NOTE: MOUNT DETECTOR ON APPLETON 25075 OR EQUIVALENT BACK BOX.

BURT, HILL SANTANGELO & LINDSAY, INC.
CONSULTING ENGINEERS
650 Smithfield Street Suite 2500 Pittsburgh PA 15222
tel: 412.394.7000 fax: 412.394.7880 www.burthill.com
307 EIGHTH STREET
NEW BRIGHTON, PA 15066
PHONE: (724) 847-0407
FAX: (724) 847-0673

©2006 Burt Hill

NO.	DATE	DESCRIPTION

REVISIONS

THE PREPARATION OF THIS DRAWING HAS BEEN FINANCED, IN PART, THROUGH A GRANT FROM THE U. S. DEPARTMENT OF TRANSPORTATION, FEDERAL TRANSIT ADMINISTRATION UNDER THE URBAN MASS TRANSPORTATION ACT OF 1964, AS AMENDED.

SIGNATURE

DMJM HARRIS | AECOM
FOUR GATEWAY CENTER
20TH FLOOR
PITTSBURGH, PA. 15222

APPROVED — DATE 04/04/08

DESIGNED	GMF
DRAWN	JEM
CHECKED	JVS
IN CHARGE	CML
DATE	4/04/08
SCALE	NTS

PORT AUTHORITY OF ALLEGHENY COUNTY
PITTSBURGH PENNSYLVANIA

NORTH SHORE CONNECTOR
ALLEGHENY STATION

ELECTRICAL DIAGRAMS AND SCHEDULES

Port Authority

CONTRACT NO. NSC-012
DWG. NO. E1.018 SHT. 183

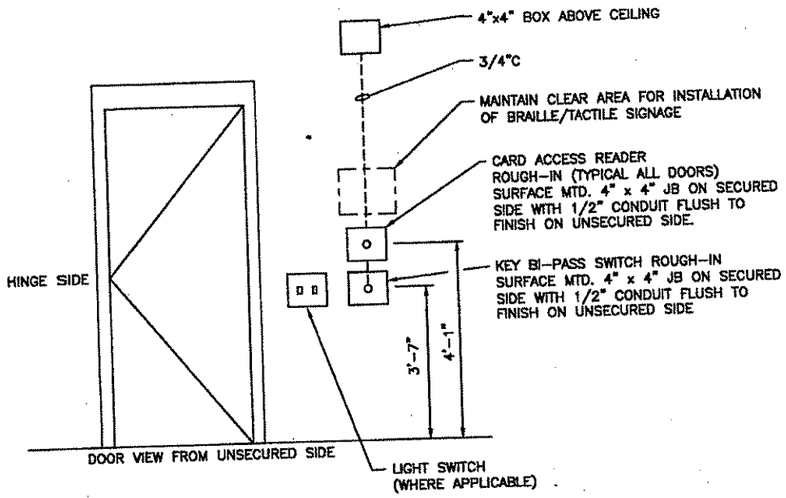

ROUGH-IN FOR SECURITY CARD ACCESS SYSTEM

DETAIL 2 EL020

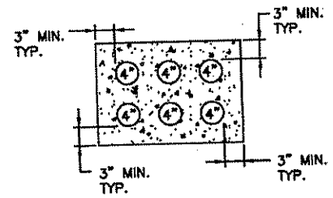

TRACTION POWER DUCTBANK-FROM BREAKER ROOM TO PIER 11

NTS

DETAIL 5 EL002

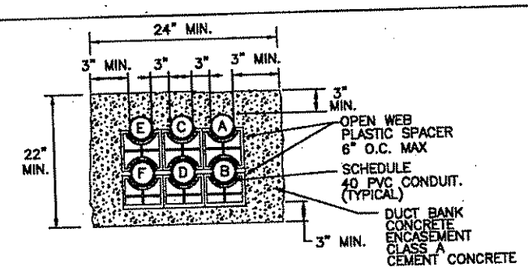

DETAIL OF CONDUIT SLEEVE THROUGH PIER 10

NTS

DETAIL 4 EL009

UNDERGROUND CONDUIT AND FEEDER SCHEDULE

CONDUIT		CONTAINING:	REMARKS
A	4"	4-600 KCMIL	FOR ELECTRICAL SERVICE
B	4"	4-600 KCMIL	FOR ELECTRICAL SERVICE
C	4"	4-600 KCMIL	FOR ELECTRICAL SERVICE
D	4"	4-600 KCMIL	FOR ELECTRICAL SERVICE
E	3"	4-250 KCMIL, #4G	FOR GENERATOR POWER
F	3"	14 #12AWG, 8 #10, #10G	FOR GENERATOR CONTROL, BLOCK HEATER, & BATTERY CHARGER

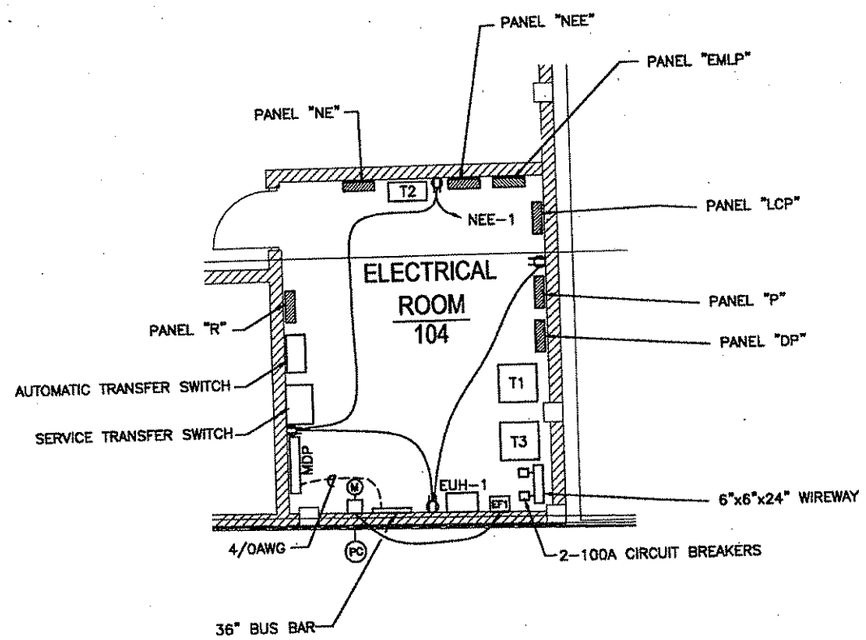

ELECTRICAL ROOM LAYOUT

SCALE: 1/4"=1'-0"

DETAIL 3 EL009

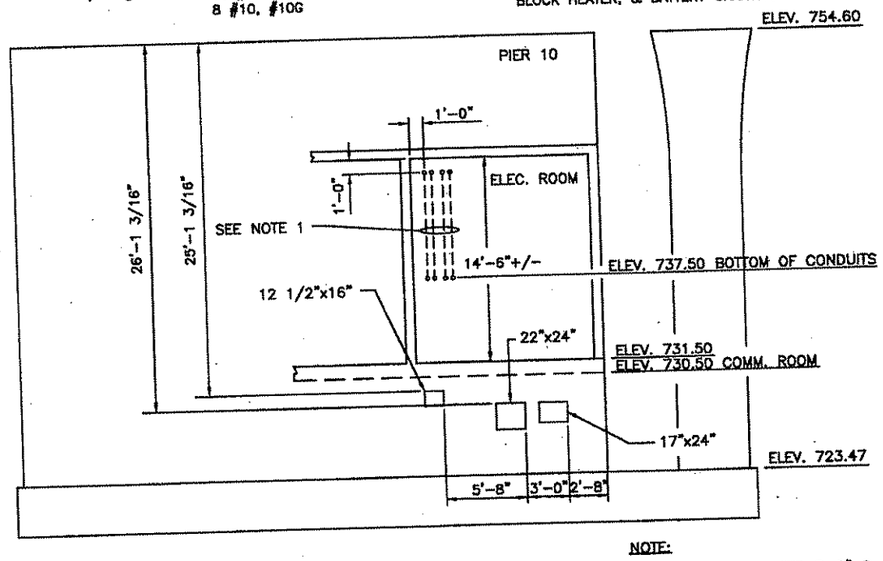

NOTE:

1. TWO 3" DATA CONDUITS @ 6" C-C
   TWO 3" POWER CONDUITS @ 6" C-C

PIER 10-SUBGRADE DUCTBANK PENETRATIONS

SCALE: 3/16"=1'-0"

BURT, HILL SANTANGELO & LINDSAY, INC.
CONSULTING ENGINEERS
650 Smithfield Street Suite 2600 Pittsburgh PA 15222
tel: 412.394.7000 fax: 412.394.7880 www.burthill.com
307 EIGHTH STREET
NEW BRIGHTON, PA 15066
PHONE: (724) 847-0407
FAX: (724) 847-0673

©2006 Burt Hill

NO.	DATE	DESCRIPTION

REVISIONS

THE PREPARATION OF THIS DRAWING HAS BEEN FINANCED, IN PART, THROUGH A GRANT FROM THE U. S. DEPARTMENT OF TRANSPORTATION, FEDERAL TRANSIT ADMINISTRATION UNDER THE URBAN MASS TRANSPORTATION ACT OF 1964, AS AMENDED.

SIGNATURE

DMJM HARRIS | AECOM
FOUR GATEWAY CENTER
20TH FLOOR
PITTSBURGH, PA. 15222

APPROVED — DATE 09/09/08

DESIGNED	GMF
DRAWN	JEM
CHECKED	JVS
IN CHARGE	CML
DATE	4/04/08
SCALE	AS SHOWN

PORT AUTHORITY OF ALLEGHENY COUNTY
PITTSBURGH PENNSYLVANIA

NORTH SHORE CONNECTOR
ALLEGHENY STATION
ELECTRICAL DETAILS

Port Authority

CONTRACT NO. NSC-012
DWG. NO. EL019 SHT. 184

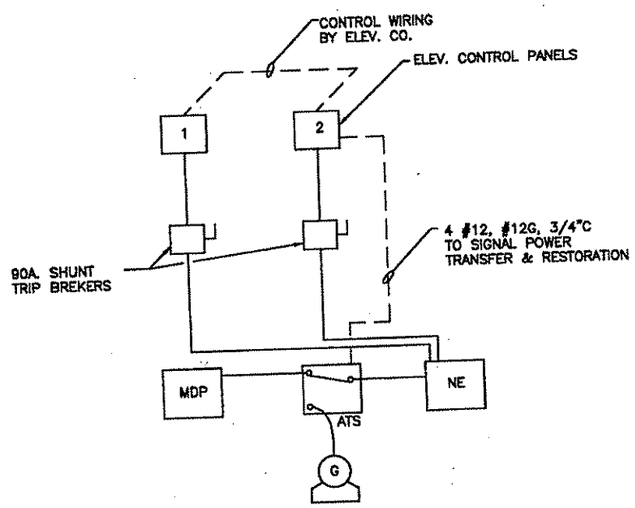

EMERGENCY OPERATION OF ELEVATORS:

1. ELEVATOR MFR. SHALL COORDINATE CONTROL PANELS TO PERMIT ELEV. #2 TO DESCEND TO STREET LEVEL, DISCHARGE PASSENGERS AND LOCK OUT. ELEV. #1 WILL THEN OPERATE NORMALLY AS REQUIRED. SEE ELEV. SPEC SECTION 14240.
2. IF SMOKE IS SENSED, ELEVATOR WILL GO TO ALTERNATE FLOOR.

ELEVATOR CONTROL ONE-LINE DIAGRAM

1 / EL009

SCALE: NTS

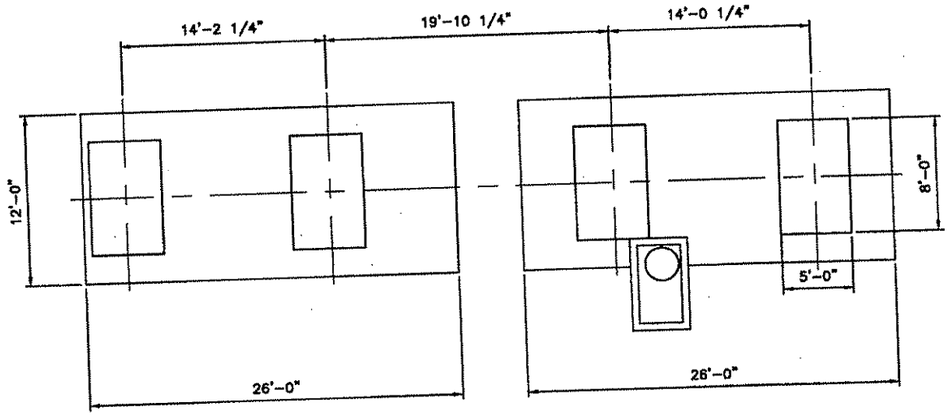

PLAN-PIER 11

4 / EL002

SCALE: 3/16"=1'-0"

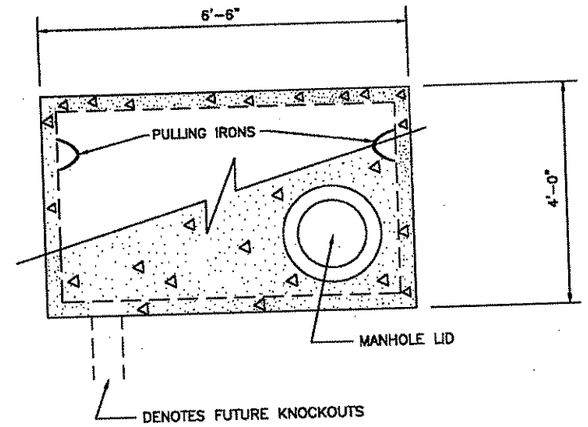

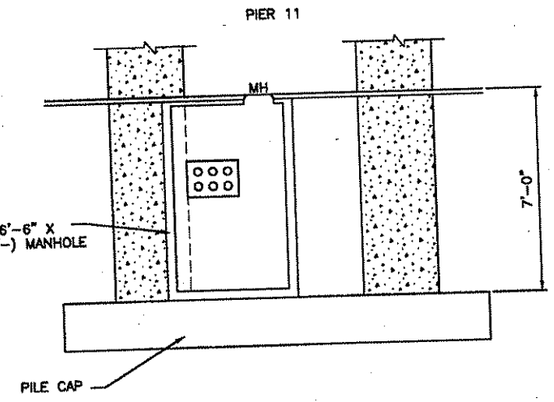

ELEV. AT MANHOLE

5 / EL002

SCALE: NTS

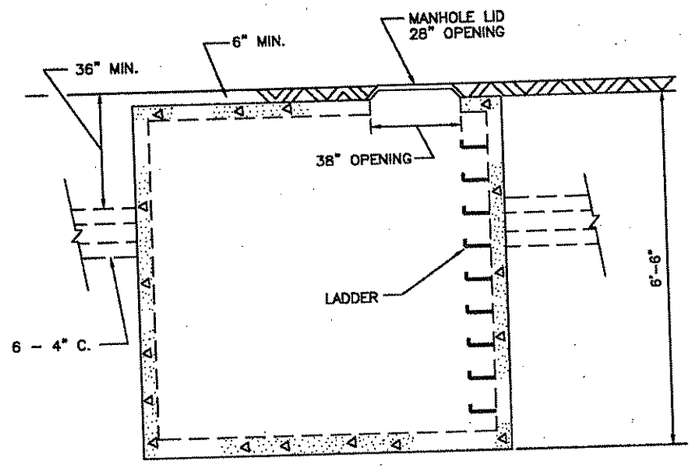

NOTE :

6" WALLS, BASE AND LID

1805EJIW 28" LID MARKED "ELECTRIC" AND BOTTOM FLANGE OPENING OF 38"

PRE-CAST CONCRETE ELECTRIC MANHOLE

NTS

DETAIL

1 / EL002

BURT, HILL SANTANGELO & LINDSAY, INC.
CONSULTING ENGINEERS
650 Smithfield Street Suite 2600 Pittsburgh PA 15222
tel: 412.394.7000 fax: 412.394.7880 www.burthill.com
307 EIGHTH STREET
NEW BRIGHTON, PA 15066
PHONE: (724) 847-0407
FAX: (724) 847-0673

©2005 Burt Hill

NO.	DATE	DESCRIPTION

REVISIONS

THE PREPARATION OF THIS DRAWING HAS BEEN FINANCED, IN PART, THROUGH A GRANT FROM THE U. S. DEPARTMENT OF TRANSPORTATION, FEDERAL TRANSIT ADMINISTRATION UNDER THE URBAN MASS TRANSPORTATION ACT OF 1964, AS AMENDED.

SIGNATURE

DMJM HARRIS | AECOM
FOUR GATEWAY CENTER
20TH FLOOR
PITTSBURGH, PA. 15222

APPROVED — DATE 04/04/08

DESIGNED	GMF
DRAWN	JEM
CHECKED	JVS
IN CHARGE	CML
DATE	4/04/08
SCALE	AS SHOWN

PORT AUTHORITY OF ALLEGHENY COUNTY
PITTSBURGH PENNSYLVANIA

NORTH SHORE CONNECTOR
ALLEGHENY STATION
ELECTRICAL
DETAILS

Port Authority

CONTRACT NO. NSC-012
DWG. NO. EL020 SHT. 185

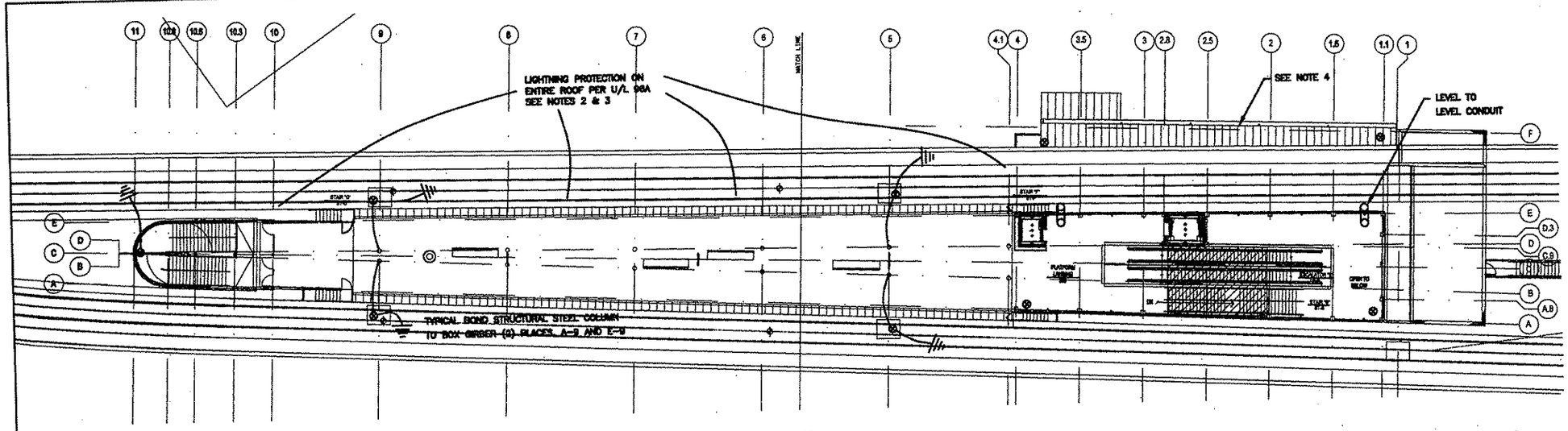

PLATFORM PLAN (A / AR101)
1/16"=1'-0"

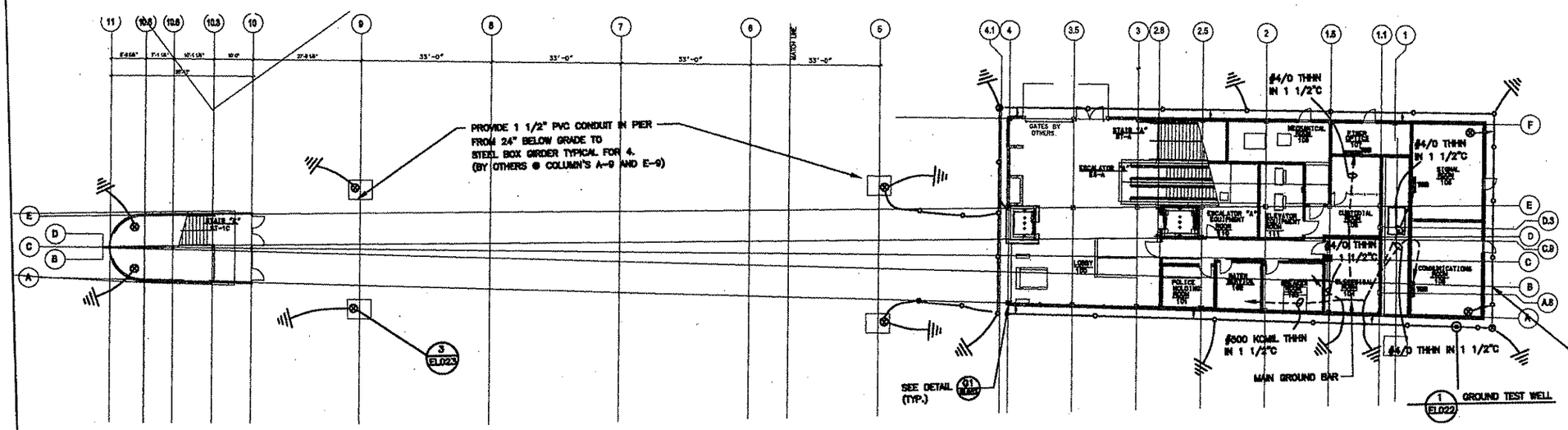

STREET LEVEL PLAN (C / AR101)
1/16"=1'-0"

GROUNDING/LIGHTNING PROTECTION LEGEND:

- #4/0 BARE COPPER CABLE (19 STRAND) BURY 24"-36" DEEP
- 3/4"X10' COPPERCLAD GROUND ROD BOND TO CABLE WITH EXOTHERMIC WELD.
- MAIN GROUND BAR (MGB) 1/4"X4"X36" ON RED SEAL INSULATORS. BOND TO LOOP IN 2 PLACES 6' APART.
- 1 1/2" PVC CONDUIT FROM BELOW GRADE TO THROUGH ROOF, #4/0 BARE COPPER CABLE (19 STRAND). TERMINATE TO 3/4" X10' COPPERCLAD GROUND ROD.
- LEVEL TO LEVEL CONDUIT
- GROUND TEST WELL

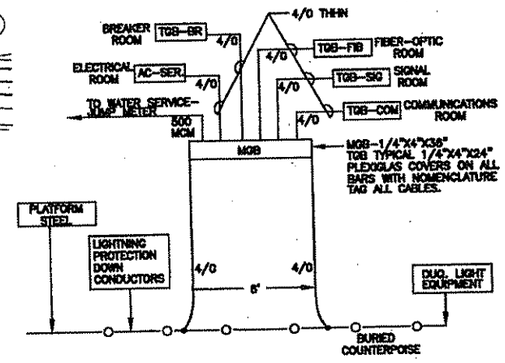

NOTES:

1. PROVIDE #4/0 GREEN THHN CABLE AS SHOWN WITHIN 1 1/2" PVC CONDUIT.
2. TERMINATE TO ALL ROOMS WITH 1/4"X4"X12" COPPER BUS BAR.
3. PROVIDE 500 KCMIL THHN TO WATER SERVICE, JUMP METER.
4. PROVIDE EQUALIZED POTENTIAL ON ALL ELECTRICAL SYSTEMS VIA THIS SINGLE-POINT DESIGN.
5. PROVIDE LABELS ON ALL RUNS.
6. PROVIDE HIGH PRESSURE NEMA SPACED LUGS THROUGHOUT.
7. PROVIDE 1 1/2" PVC CONDUIT FOR SINGLE POINT RUNS AS REQUIRED.

SINGLE LINE GROUNDING DIAGRAM
NTS

GROUNDING/LIGHTNING PROTECTION NOTES:

1. MGB SINGLE POINT CONNECTIONS TO MAIN WATER, ELECTRIC SERVICE, SIGNAL ROOM, COMMUNICATIONS ROOM, FIBER-OPTIC ROOM AND BREAKER ROOM.
2. ASSURE ELECTRICAL CONTINUITY OF ALL STEEL.
3. ON ROOF PROVIDE BIN.[2] BEAM CLAMPS TO CONTINUE THE LIGHTNING PROTECTION.
4. VERIFY FOR AIR-TERMINAL OR CONDUCTIVE PLATES.

BURT, HILL SANTANGELO & LINDSAY, INC.
CONSULTING ENGINEERS
650 Smithfield Street Suite 2600 Pittsburgh PA 15222
tel: 412.394.7000 fax: 412.394.7880 www.burthill.com
307 EIGHTH STREET
NEW BRIGHTON, PA 15066
PHONE: (724) 847-0407
FAX: (724) 847-0673

©2006 Burt Hill

NO.	DATE	DESCRIPTION

REVISIONS

THE PREPARATION OF THIS DRAWING HAS BEEN FINANCED, IN PART, THROUGH A GRANT FROM THE U. S. DEPARTMENT OF TRANSPORTATION, FEDERAL TRANSIT ADMINISTRATION UNDER THE URBAN MASS TRANSPORTATION ACT OF 1964, AS AMENDED.

SIGNATURE

DMJM HARRIS | AECOM
FOUR GATEWAY CENTER
20TH FLOOR
PITTSBURGH, PA. 15222

APPROVED — DATE 04/04/06

DESIGNED	GMF
DRAWN	JEM
CHECKED	JVS
IN CHARGE	GML
DATE	4/04/06
SCALE	AS SHOWN

PORT AUTHORITY OF ALLEGHENY COUNTY
PITTSBURGH PENNSYLVANIA

NORTH SHORE CONNECTOR
ALLEGHENY STATION
GROUNDING/LIGHTNING PROTECTION PLAN

Port Authority

CONTRACT NO. NSC-012
DWG. NO. EL021 SHT. 186

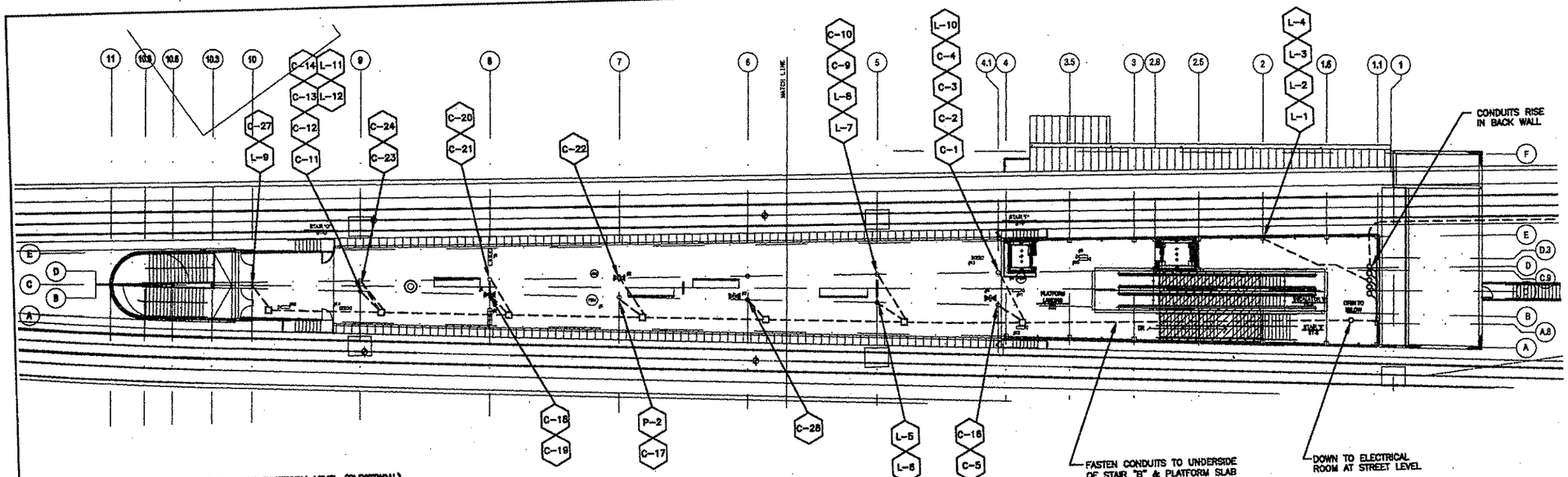

* SEE DETAIL 2 ON THIS SHEET FOR ADDITIONAL INFORMATION

1 / EL022 PLATFORM PLAN
1/16"=1'-0"

NOTES:

1. PROVIDE FOR A MAXIMUM OF 3-90° BENDS BETWEEN PULL/JUNCTION BOXES.
2. REFER TO DRAWINGS EL014 & EL015 FOR LOCATION OF EQUIPMENT AT PLATFORM LEVEL.
3. DATA AND POWER CABLES FOR ALL COMMUNICATION DEVICES SHALL BE ROUTED THROUGH PULL BOXES IN ROOM 103 AND 3" CONDUITS IN PIER 10 TO COMMUNICATIONS ROOM 201. FOR CONTRACT 009
4. USE LIQUIDTIGHT FLEXIBLE METAL CONDUIT WHEN TRANSITIONING FROM THE STATION PLATFORM CONDUIT RUN TO THE RIGID METAL CONDUIT ALONG AERIAL DECK STRUCTURE. REFERENCE CONDUIT L-10, CIRCUIT LCP-20, 24

TO/FROM CONDUIT LIST FOR PLATFORM LEVEL (ELECTRICAL)

CONDUITS	LOAD	# OF CONDUITS	CONDUIT SIZE	DESTINATION	ORIGIN
L-1	EXIT SIGNS & EMERGENCY LIGHTING	1	1 INCH	PLATFORM LEVEL (VIA COLUMN 2E)	ELECTRICAL ROOM 104
L-2 THRU L-9	PLATFORM LIGHTING	8	1 INCH	PLATFORM LEVEL (3 VIA COLUMN 2E, 4 VIA COLUMN 5B & D, 1 VIA COLUMN 10)	ELECTRICAL ROOM 104
L-10 & L-11	PARKING AREA & PIER LIGHTING	2	1 INCH	BENEATH PLATFORM DECK	ELECTRICAL ROOM 104
L-12	SIDEWALK LIGHTING	1	1 INCH	J.B. AT STA. 8052+50.00, LT	ELECTRICAL ROOM 104
P-1, 2	RECEPTACLES	2	1 INCH	PLATFORM LEVEL (1 VIA COLUMN 5B, 1 VIA COLUMN 7B)	ELECTRICAL ROOM 104
C-1, 2	CCTV #9	2	1 INCH	PLATFORM LEVEL (VIA COLUMN 4.1D)	COMMUNICATION ROOM
C-3, 4	CCTV #10	2	1 INCH	PLATFORM LEVEL (VIA COLUMN 4.1D)	COMMUNICATION ROOM
C-5, 6	CCTV #11	2	1 INCH	PLATFORM LEVEL (VIA COLUMN 4.1B)	COMMUNICATION ROOM
C-7, 8	CCTV #12	2	1 INCH	PLATFORM LEVEL (VIA COLUMN 4.1B)	COMMUNICATION ROOM
C-9, 10	CCTV #13	2	1 INCH	PLATFORM LEVEL (VIA COLUMN 5D)	COMMUNICATION ROOM
C-11, 12	CCTV #14	2	1 INCH	PLATFORM LEVEL (VIA COLUMN 9B)	COMMUNICATION ROOM
C-13, 14	CCTV #15	2	1 INCH	PLATFORM LEVEL (VIA COLUMN 9B)	COMMUNICATION ROOM
C-15	SPEAKERS 1-4	1	1 INCH	PLATFORM LEVEL (VIA COLUMN 5B)	COMMUNICATION ROOM
C-16, 17	PASSENGER PHONES	2	1 INCH	PLATFORM LEVEL (1 VIA COLUMN 4B, 1 VIA COLUMN 7D)	COMMUNICATION ROOM
C-18-21	VMS G-1 AND G-2	4	1 INCH	PLATFORM LEVEL (VIA COLUMN 8B & 8D)	COMMUNICATION ROOM
C-22	AMBIENT NOISE SENSORS	1	1 INCH	PLATFORM LEVEL (VIA COLUMN 7D)	COMMUNICATION ROOM
C-23, 24	CCTV #16	2	1 INCH	PIER NO. 8	COMMUNICATION ROOM
C-25, 26	CCTV #17	2	1 INCH	PIER NO. 9	COMMUNICATION ROOM
C-27	SIGNS B-8 & B-9	1	1 INCH	PLATFORM LEVEL (VIA COLUMN 10C)	COMMUNICATION ROOM
C-28	SIGNS B-6 & B-7	1	1 INCH	PLATFORM LEVEL (VIA COLUMN 6B)	COMMUNICATION ROOM
C-29	SIGN B-5	1	1 INCH	PLATFORM LEVEL (VIA COLUMN 4.1B)	COMMUNICATION ROOM

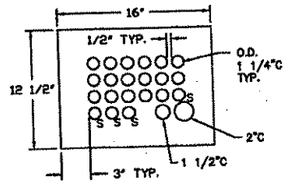

4 / EL022 DETAIL OF CONDUIT FROM ELECTRICAL ROOM TO RM'S. WEST OF PIER 10.
1 1/2"=1'-0"

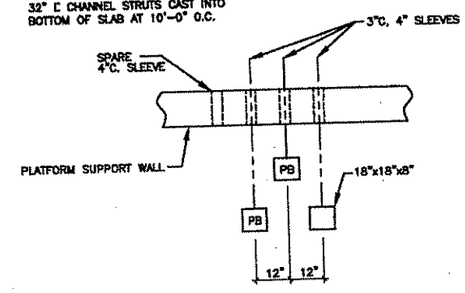

5 / EL022 SLEEVES THROUGH PLATFORM SUPPORT WALL
NTS
REFER TO DETAIL 2 THIS SHEET FOR PULLBOX AND CONDUIT SIZES.

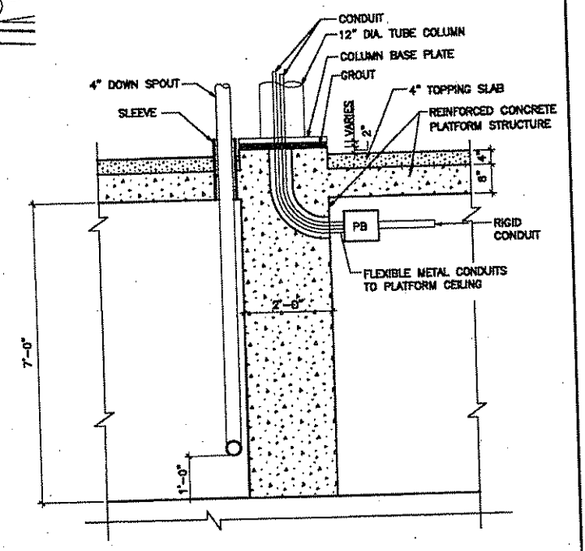

3 / EL022 PLATFORM PENETRATIONS @ COLUMNS
NTS

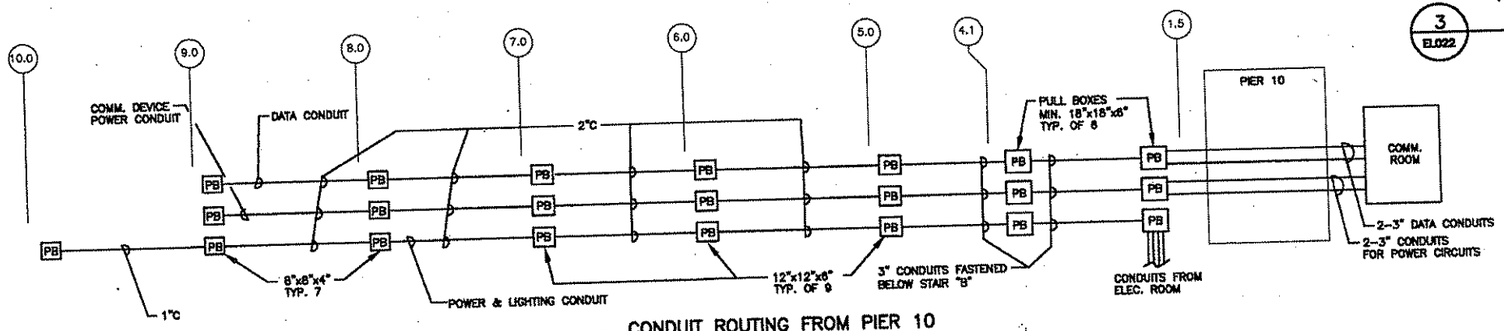

2 / EL022 CONDUIT ROUTING FROM PIER 10 TO PLATFORM SLAB
NTS

BURT, HILL SANTANGELO & LINDSAY, INC.
CONSULTING ENGINEERS
650 Smithfield Street Suite 2600 Pittsburgh PA 15222
tel: 412.394.7000 fax: 412.394.7980 www.burthill.com
307 EIGHTH STREET
NEW BRIGHTON, PA 15066
PHONE: (724) 847-0407
FAX: (724) 847-0673

©2008 Burt Hill

NO.	DATE	DESCRIPTION

REVISIONS

THE PREPARATION OF THIS DRAWING HAS BEEN FINANCED, IN PART, THROUGH A GRANT FROM THE U.S. DEPARTMENT OF TRANSPORTATION, FEDERAL TRANSIT ADMINISTRATION UNDER THE URBAN MASS TRANSPORTATION ACT OF 1964, AS AMENDED.

SIGNATURE

DMJM HARRIS | AECOM
FOUR GATEWAY CENTER
20TH FLOOR
PITTSBURGH, PA. 15222

APPROVED — DATE 04/04/08

DESIGNED	GMF
DRAWN	JEM
CHECKED	JVS
IN CHARGE	CML
DATE	4/04/08
SCALE	AS SHOWN

PORT AUTHORITY OF ALLEGHENY COUNTY
PITTSBURGH PENNSYLVANIA

NORTH SHORE CONNECTOR
ALLEGHENY STATION
CONDUIT-RUN PLAN

Port Authority

CONTRACT NO. NSC-012
DWG. NO. EL024 SHT. 189

SIGN TYPES

A	STATION ID AT PLATFORM
B	DESTINATION DIRECTIONAL, OVERHEAD
C.1	SYSTEM MAP
C.2	VICINITY MAP
D.2	INFORMATIONAL/REGULATORY, WALL MOUNTED
E	BRAILLE/TACTILE ID SIGNS
F.1	STATION ID AT ENTRANCE
G	LED ELECTRONIC DISPLAY (V.M.S.)

SIGN LEGEND

E | 19 — SIGN NUMBER / SIGN TYPE

SIGN LOCATION PLAN IS FOR GENERAL REFERENCE ONLY. TARGETS INDICATE APPROXIMATE SIGN LOCATIONS AND ARE KEYED TO SIGN SCHEDULES. ELEVATIONS, DETAILS AND LAYOUTS ARE LOCATED ELSEWHERE IN THE DRAWINGS, LOCATIONS OF WHICH ARE REFERENCED IN THE SIGN SCHEDULES.

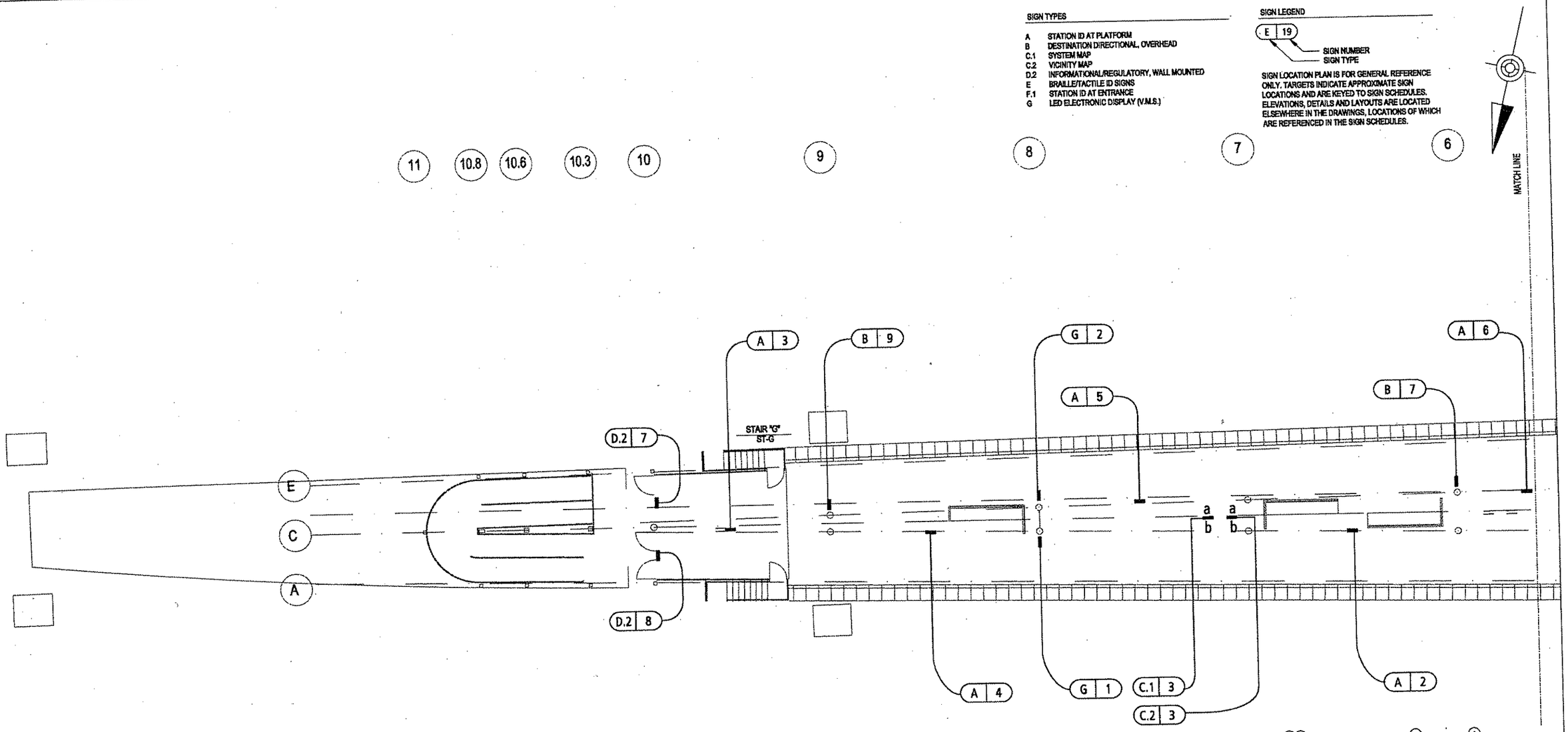

PARTIAL STREET LEVEL SIGN LOCATION PLAN

Scale: 1/8" = 1'-0"

A
SG107

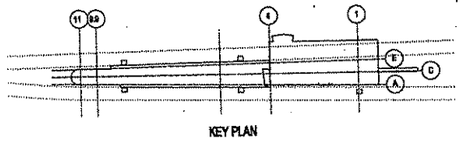

KEY PLAN

BURT, HILL
650 Smithfield Street Suite 2600 Pittsburgh PA 15222
tel: 412.394.7000 fax: 412.394.7880 www.burthill.com
©2006 Burt Hill

Morgner/Kiesel
Visual Communications
319 SW Washington Street
Suite 820
Portland, Oregon 97204
T 503.223.5953
F 503.223.8076

NO.	DATE	DESCRIPTION

REVISIONS

THE PREPARATION OF THIS DRAWING HAS BEEN FINANCED, IN PART, THROUGH A GRANT FROM THE U. S. DEPARTMENT OF TRANSPORTATION, FEDERAL TRANSIT ADMINISTRATION UNDER THE URBAN MASS TRANSPORTATION ACT OF 1964, AS AMENDED.

SIGNATURE

DMJM HARRIS | AECOM
FOUR GATEWAY CENTER
20TH FLOOR
PITTSBURGH, PA. 15222

APPROVED — DATE 04/04/08

DESIGNED	REW
DRAWN	JFC
CHECKED	MDR
IN CHARGE	MDR
DATE	4/04/08
SCALE	0 2' 4' 8' 12'

PORT AUTHORITY OF ALLEGHENY COUNTY
PITTSBURGH PENNSYLVANIA

NORTH SHORE CONNECTOR
ALLEGHENY STATION
PARTIAL PLATFORM LEVEL SIGN LOCATION PLAN

Port Authority

CONTRACT NO.	NSC-012-C
DWG. NO.	SG107
SHT.	139

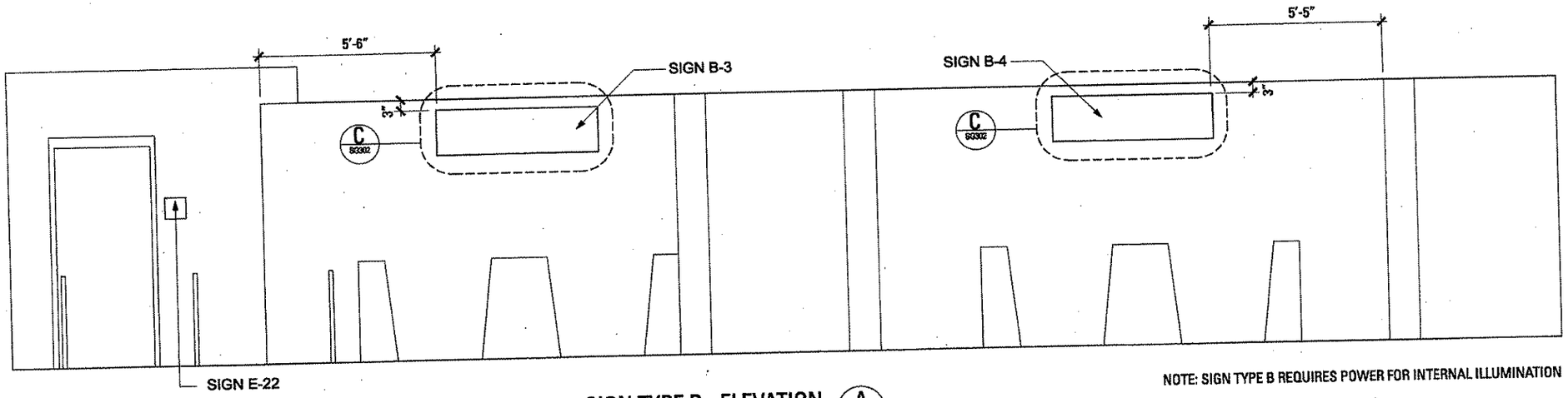

NOTE: SIGN TYPE B REQUIRES POWER FOR INTERNAL ILLUMINATION

SIGN TYPE B - ELEVATION (A / SG204)

Scale: 1/2" = 1'-0"

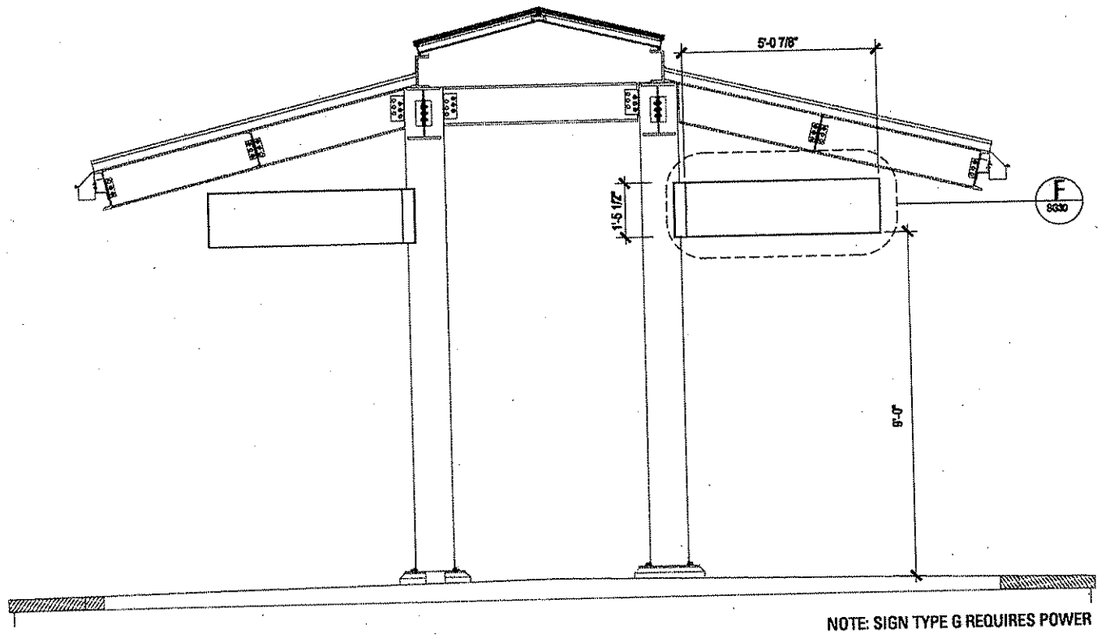

NOTE: SIGN TYPE G REQUIRES POWER

TYPICAL SIGN TYPE G ELEVATION (B / SG204)

Scale: 1/2" = 1'-0"

BURT, HILL
650 Smithfield Street Suite 2600 Pittsburgh PA 15222
tel: 412.394.7000 fax: 412.394.7880 www.burthill.com
©2005 Burt Hill

Morgan/Wood
Visual Communications
319 SW Washington Street
Suite 820
Portland, Oregon 97204
T 503.223.5953
F 503.223.8076

NO.	DATE	DESCRIPTION

REVISIONS

THE PREPARATION OF THIS DRAWING HAS BEEN FINANCED, IN PART, THROUGH A GRANT FROM THE U. S. DEPARTMENT OF TRANSPORTATION, FEDERAL TRANSIT ADMINISTRATION UNDER THE URBAN MASS TRANSPORTATION ACT OF 1964, AS AMENDED.

SIGNATURE

DMJM HARRIS | AECOM
FOUR GATEWAY CENTER
20TH FLOOR
PITTSBURGH, PA. 15222

APPROVED — DATE 04/04/08

DESIGNED	REW
DRAWN	JFC
CHECKED	MDR
IN CHARGE	MDR
DATE	4/04/08
SCALE	0 6" 1' 2' 3'

PORT AUTHORITY OF ALLEGHENY COUNTY
PITTSBURGH PENNSYLVANIA

NORTH SHORE CONNECTOR
ALLEGHENY STATION
SIGN TYPES B+G - ELEVATION

Port Authority

CONTRACT NO. NSC-012-C
DWG. NO. SG204
SHT. 143

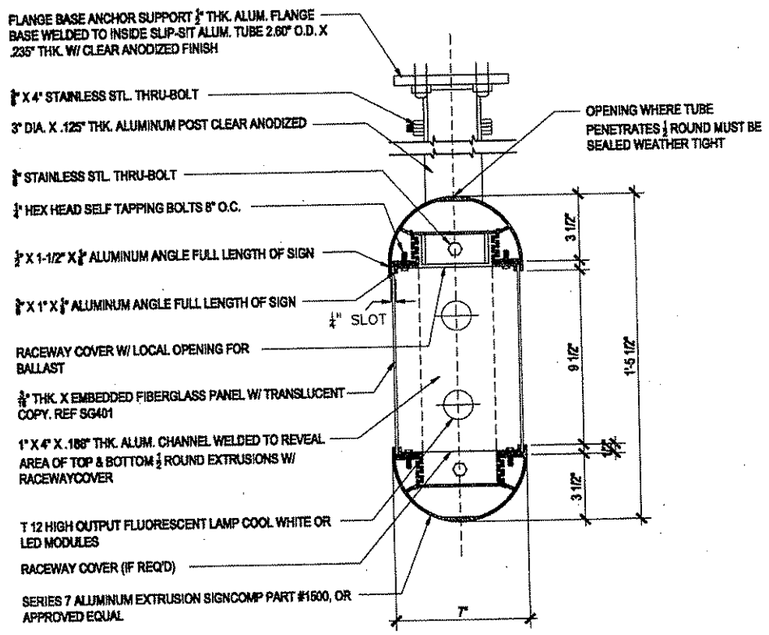

NOTE: PAINT INSIDE OF SIGN BOX GLOSS WHITE

SIGN SECTION (A / SG301)

Scale: 1/4" = 1"

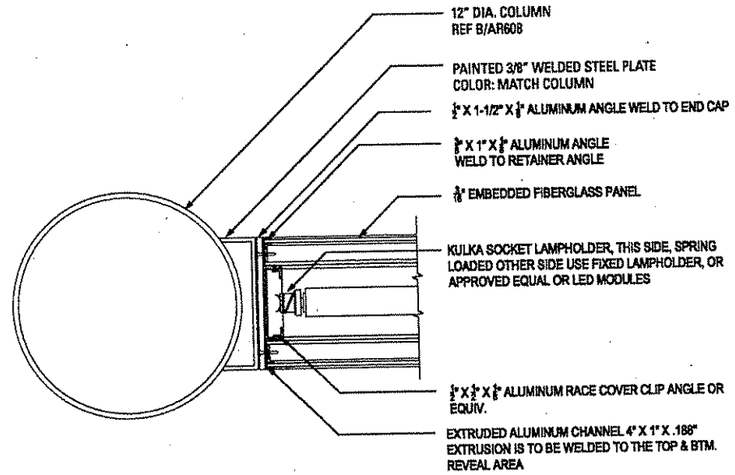

SECTION (D / SG301)

Scale: 1/4" = 1"

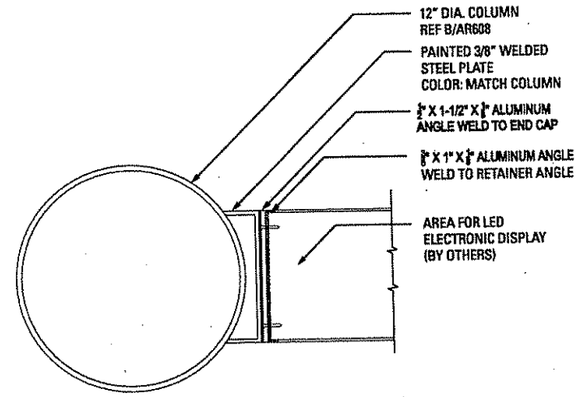

SECTION (E / SG301)

Scale: 1/4" = 1"

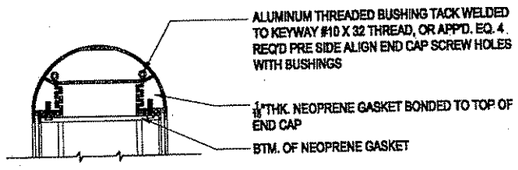

END CAP SECTION (view from side) (B / SG301)

Scale: 1/4" = 1"

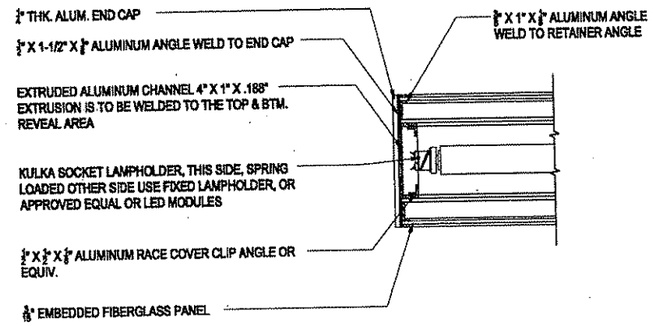

SECTION (C / SG301)

Scale: 1/4" = 1"

BURT, HILL
650 Smithfield Street Suite 2600 Pittsburgh PA 15222
tel: 412.394.2000 fax: 412.394.2880 www.burthill.com

©2008 BurtHill

Mayer/Reed
Visual Communications
319 SW Washington Street
Suite 820
Portland, Oregon 97204
T 503.223.5953
F 503.223.8076

NO.	DATE	DESCRIPTION

REVISIONS

THE PREPARATION OF THIS DRAWING HAS BEEN FINANCED, IN PART, THROUGH A GRANT FROM THE U. S. DEPARTMENT OF TRANSPORTATION, FEDERAL TRANSIT ADMINISTRATION UNDER THE URBAN MASS TRANSPORTATION ACT OF 1964, AS AMENDED.

SIGNATURE

DMJM HARRIS | AECOM
FOUR GATEWAY CENTER
20TH FLOOR
PITTSBURGH, PA. 15222

APPROVED — DATE 04/04/08

DESIGNED	REW
DRAWN	JFC
CHECKED	MDR
IN CHARGE	MDR
DATE	4/04/08
SCALE	AS NOTED

PORT AUTHORITY OF ALLEGHENY COUNTY
PITTSBURGH PENNSYLVANIA

NORTH SHORE CONNECTOR
ALLEGHENY STATION
SIGN DETAILS

Port Authority

CONTRACT NO. NSC-012-C
DWG. NO. SG301 SHT. 145

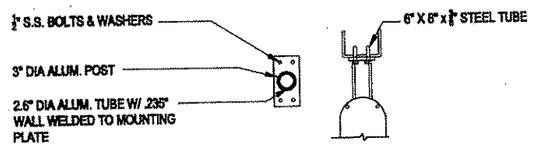

MOUNTING PLATE (A / SG302)

Scale: 1" = 1'-0"

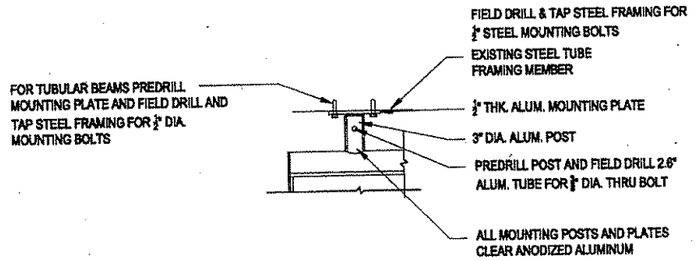

MOUNTING DETAIL (B / SG302)

Scale: 1" = 1'-0"

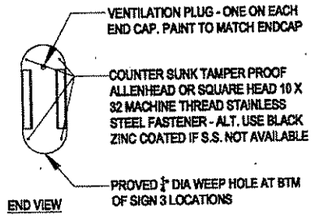

END VIEW (D / SG302)

Scale: 1" = 1'-0"

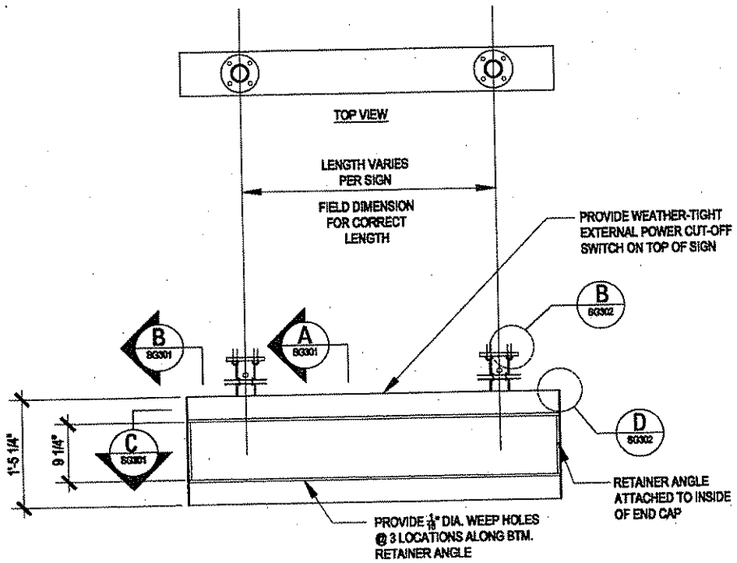

SUSPENDED SIGN DETAIL (C / SG302)

Scale: 1" = 1'-0"

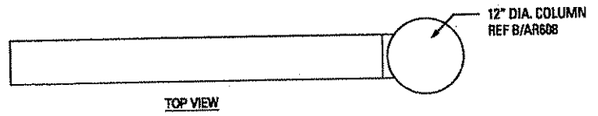

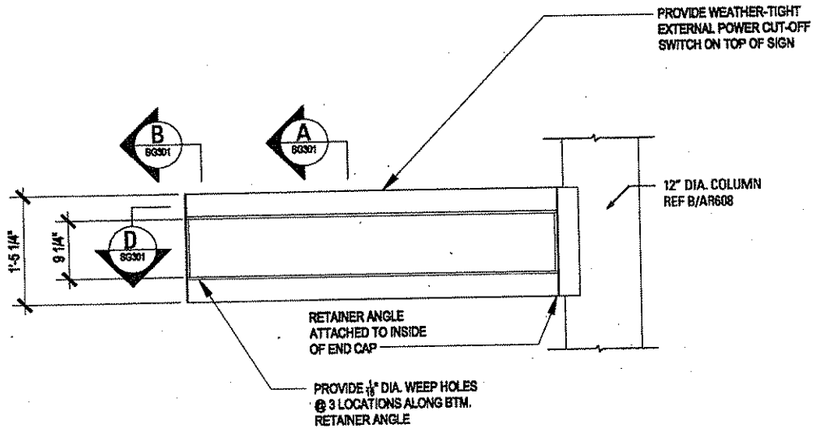

CANTILEVERED SIGN DETAIL (E / SG302)

Scale: 1" = 1'-0"

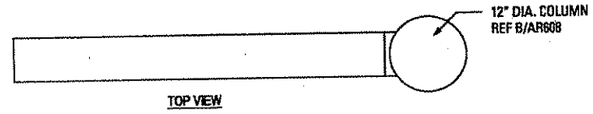

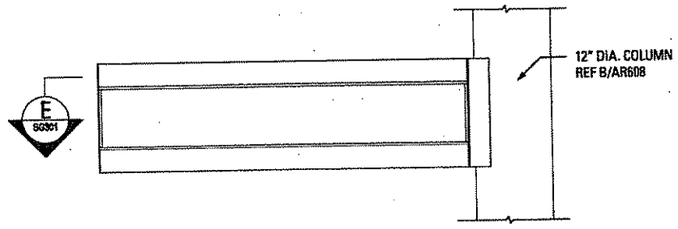

CANTILEVERED LED SIGN DETAIL (F / SG302)

Scale: 1" = 1'-0"

BURT, HILL
650 Smithfield Street Suite 2600 Pittsburgh PA 15222
tel: 412.394.7000 fax: 412.394.7880 www.burthill.com
©2008 Burt Hill

Mayer/Reed
Visual Communications
319 SW Washington Street
Suite 820
Portland, Oregon 97204
T 503.223.5953
F 503.223.8076

NO.	DATE	DESCRIPTION

REVISIONS

THE PREPARATION OF THIS DRAWING HAS BEEN FINANCED, IN PART, THROUGH A GRANT FROM THE U. S. DEPARTMENT OF TRANSPORTATION, FEDERAL TRANSIT ADMINISTRATION UNDER THE URBAN MASS TRANSPORTATION ACT OF 1964, AS AMENDED.

SIGNATURE

DMJM HARRIS | AECOM
FOUR GATEWAY CENTER
20TH FLOOR
PITTSBURGH, PA. 15222

APPROVED — DATE 05/09/08

DESIGNED	REW
DRAWN	JFC
CHECKED	MDR
IN CHARGE	MDR
DATE	4/04/08
SCALE	AS NOTED

PORT AUTHORITY OF ALLEGHENY COUNTY
PITTSBURGH PENNSYLVANIA

NORTH SHORE CONNECTOR
ALLEGHENY STATION
SIGNAGE DETAILS

Port Authority

CONTRACT NO. NSC-012-C
DWG. NO. SG302 SHT. 146

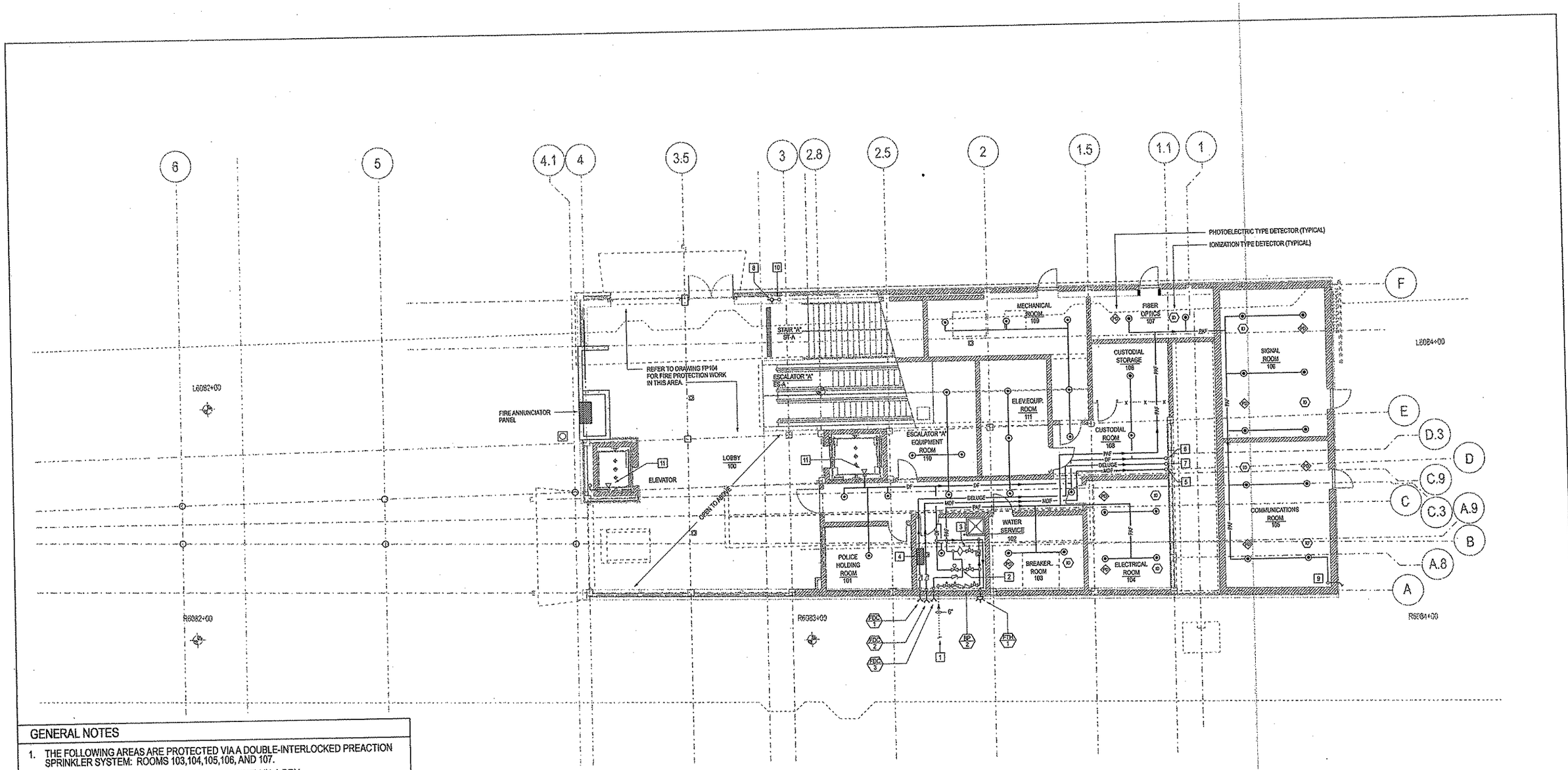

GENERAL NOTES

1. THE FOLLOWING AREAS ARE PROTECTED VIA A DOUBLE-INTERLOCKED PREACTION SPRINKLER SYSTEM: ROOMS 103,104,105,106, AND 107.
2. ALL OTHER SPRINKLERED AREAS ARE PROTECTED VIA A DRY PIPE SPRINKLER SYSTEM.
3. SMOKE DETECTORS IN PRE-ACTION AREAS ARE PROVIDED BY THE FIRE PROTECTION CONTRACTOR.
4. PROVIDE SIGNAGE / IDENTIFICATION OF ALL FIRE DEPARTMENT CONNECTIONS, HOSE VALVES, BACKFLOW PREVENTERS, ETC. IN ACCORDANCE WITH CITY OF PITTSBURGH REQUIREMENTS.
5. ALL FIRE DEPARTMENT CONNECTIONS, HOSE VALVES, ETC. SHALL BE EQUIPPED WITH THREAD DESIGNS IN ACCORDANCE WITH CITY OF PITTSBURGH REQUIREMENTS.

DRAWING NOTES

1. INCOMING 6" FIRE PROTECTION SERVICE.
2. DRY VALVE.
3. PREACTION VALVE.
4. PREACTION SYSTEM CONTROL PANEL.
5. MANUAL DRY STANDPIPE RISER UP.
6. DRY PIPE (SPRINKLER) RISER UP.
7. MANUAL DRY DELUGE (SPRINKLER) RISER UP.

DRAWING NOTES CONT.

8. FIRE DEPARTMENT HOSE CONNECTION AT STANDPIPE.
9. INSPECTORS TEST CONNECTION FOR PREACTION SYSTEM. PROVIDE SHUTOFF VALVE, SIGHT GLASS STATION, AND BALL DRIP AT DROP INSIDE EXTERIOR WALL AND TERMINATE OUTSIDE BUILDING.
10. STANDPIPE DOWN FROM MEZZANINE LEVEL.
11. PROVIDE SPRINKLER PROTECTION IN THE BASE OF THE ELEVATOR SHAFT VIA A SIDEWALL TYPE SPRINKLER IN ACCORDANCE WITH THE REQUIREMENTS OF NFPA.

BURT, HILL
650 Smithfield Street Suite 2600 Pittsburgh PA 15222
tel: 412.394.7000 fax: 412.394.7880 www.burthill.com

©2008 Burt Hill

NO.	DATE	DESCRIPTION

REVISIONS

THE PREPARATION OF THIS DRAWING HAS BEEN FINANCED, IN PART, THROUGH A GRANT FROM THE U. S. DEPARTMENT OF TRANSPORTATION, FEDERAL TRANSIT ADMINISTRATION UNDER THE URBAN MASS TRANSPORTATION ACT OF 1964, AS AMENDED.

COMMONWEALTH OF PENNSYLVANIA REGISTERED PROFESSIONAL ROBERT J. GRAF ENGINEER 054929-E

SIGNATURE

DMJM HARRIS | AECOM
FOUR GATEWAY CENTER
20TH FLOOR
PITTSBURGH, PA. 15222

APPROVED 04/04/08 DATE

DESIGNED	
DRAWN	
CHECKED	
IN CHARGE	
DATE	4/04/08
SCALE	1/8" = 1'-0" (0 2' 4' 8' 12')

PORT AUTHORITY OF ALLEGHENY COUNTY
PITTSBURGH PENNSYLVANIA

NORTH SHORE CONNECTOR

PARTIAL STREET LEVEL
FIRE PROTECTION PLAN - WEST

Port Authority

CONTRACT NO. NSC-012-P
DWG. NO. FP102 SHT. 192

4/11/2008 9:27:44 AM
N:\60062807 CADD\Sheet - Fire Protection\NSFP102.DGN

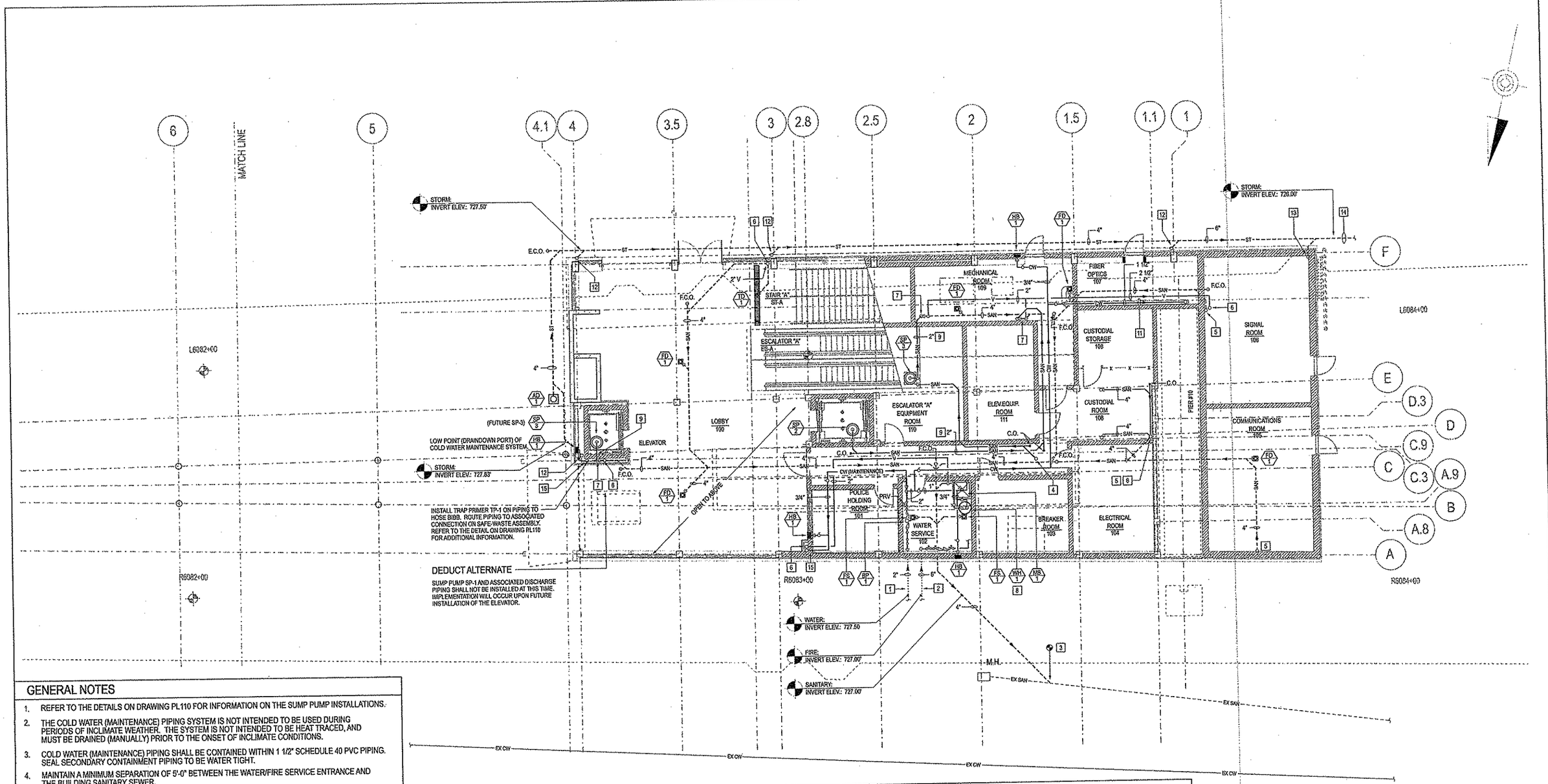

GENERAL NOTES

1. REFER TO THE DETAILS ON DRAWING PL110 FOR INFORMATION ON THE SUMP PUMP INSTALLATIONS.
2. THE COLD WATER (MAINTENANCE) PIPING SYSTEM IS NOT INTENDED TO BE USED DURING PERIODS OF INCLIMATE WEATHER. THE SYSTEM IS NOT INTENDED TO BE HEAT TRACED, AND MUST BE DRAINED (MANUALLY) PRIOR TO THE ONSET OF INCLIMATE CONDITIONS.
3. COLD WATER (MAINTENANCE) PIPING SHALL BE CONTAINED WITHIN 1 1/2" SCHEDULE 40 PVC PIPING. SEAL SECONDARY CONTAINMENT PIPING TO BE WATER TIGHT.
4. MAINTAIN A MINIMUM SEPARATION OF 5'-0" BETWEEN THE WATER/FIRE SERVICE ENTRANCE AND THE BUILDING SANITARY SEWER.

DRAWING NOTES

1. DOMESTIC WATER SERVICE. REFER TO THE SITE UTILITY PLANS FOR CONTINUATION.
2. FIRE PROTECTION SERVICE. REFER TO THE SITE UTILITY PLANS FOR CONTINUATION.
3. BUILDING SANITARY SERVICE. REFER TO THE SITE UTILITY PLANS FOR CONTINUATION.
4. INDIRECT WASTE PIPING FROM ESCALATOR PIT ABOVE. ROUTE TO DISCHARGE IN SUMP OF ESCALATOR BELOW AS INDICATED.
5. SANITARY PIPING DOWN FROM MEZZANINE LEVEL ABOVE.
6. VENT PIPING UP TO MEZZANINE LEVEL ABOVE. REFER TO DRAWING PL104 FOR CONTINUATION.
7. SAFE-WASTE ASSEMBLY. REFER TO THE DETAIL ON DRAWING PL110 FOR ADDITIONAL INFORMATION.

DRAWING NOTES CONT.

8. SUSPENDED WATER HEATER. REFER TO THE DETAIL ON DRAWING PL110 FOR ADDITIONAL INFORMATION.
9. SANITARY FORCE MAIN PIPING. ROUTE TO DISCHARGE ABOVE SAFE-WASTE ASSEMBLY AS INDICATED.
10. CW PIPING UP TO FLOOR HYDRANT ABOVE.
11. DOUBLE-CONTAINED PIPING SYSTEM. REFER TO THE SPECIFICATIONS FOR ADDITIONAL INFORMATION.
12. 3" VERTICAL STORM WATER CONDUCTOR DOWN FROM ABOVE.
13. 4" VERTICAL STORM WATER CONDUCTOR FROM ABOVE.
14. CONNECT TO SITE STORM WATER PIPING. REFER TO THE SITE UTILITY DRAWINGS FOR CONTINUATION.

DRAWING NOTES CONT.

15. COLD WATER (MAINTENANCE) PIPING. REFER TO MEZZANINE LEVEL PLUMBING PLAN (DRAWING PL104) FOR CONTINUATION.

BURT, HILL
650 Smithfield Street Suite 2600 Pittsburgh PA 15222
tel: 412.394.7000 fax: 412.394.7880 www.burthill.com

©2006 Burt Hill

NO.	DATE	DESCRIPTION

REVISIONS

THE PREPARATION OF THIS DRAWING HAS BEEN FINANCED, IN PART, THROUGH A GRANT FROM THE U. S. DEPARTMENT OF TRANSPORTATION, FEDERAL TRANSIT ADMINISTRATION UNDER THE URBAN MASS TRANSPORTATION ACT OF 1964, AS AMENDED.

COMMONWEALTH OF PENNSYLVANIA — REGISTERED PROFESSIONAL — ROBERT J. GRAF — ENGINEER — 054572-E

SIGNATURE

DMJM HARRIS | AECOM
FOUR GATEWAY CENTER
20TH FLOOR
PITTSBURGH, PA. 15222

APPROVED — DATE 04/04/08

DESIGNED	
DRAWN	
CHECKED	
IN CHARGE	
DATE	4/04/08
SCALE	1/8" = 1'-0"

0 2' 4' 8' 12'

PORT AUTHORITY OF ALLEGHENY COUNTY
PITTSBURGH PENNSYLVANIA

NORTH SHORE CONNECTOR

PARTIAL STREET LEVEL PLUMBING PLAN - WEST

Port Authority

CONTRACT NO. NSC-012-P
DWG. NO. PL102 SHT. 157

4/11/2008 9:37:18 AM
N:\06R06007 CADD\Sheet - Plumbing\NSPL102.DGN

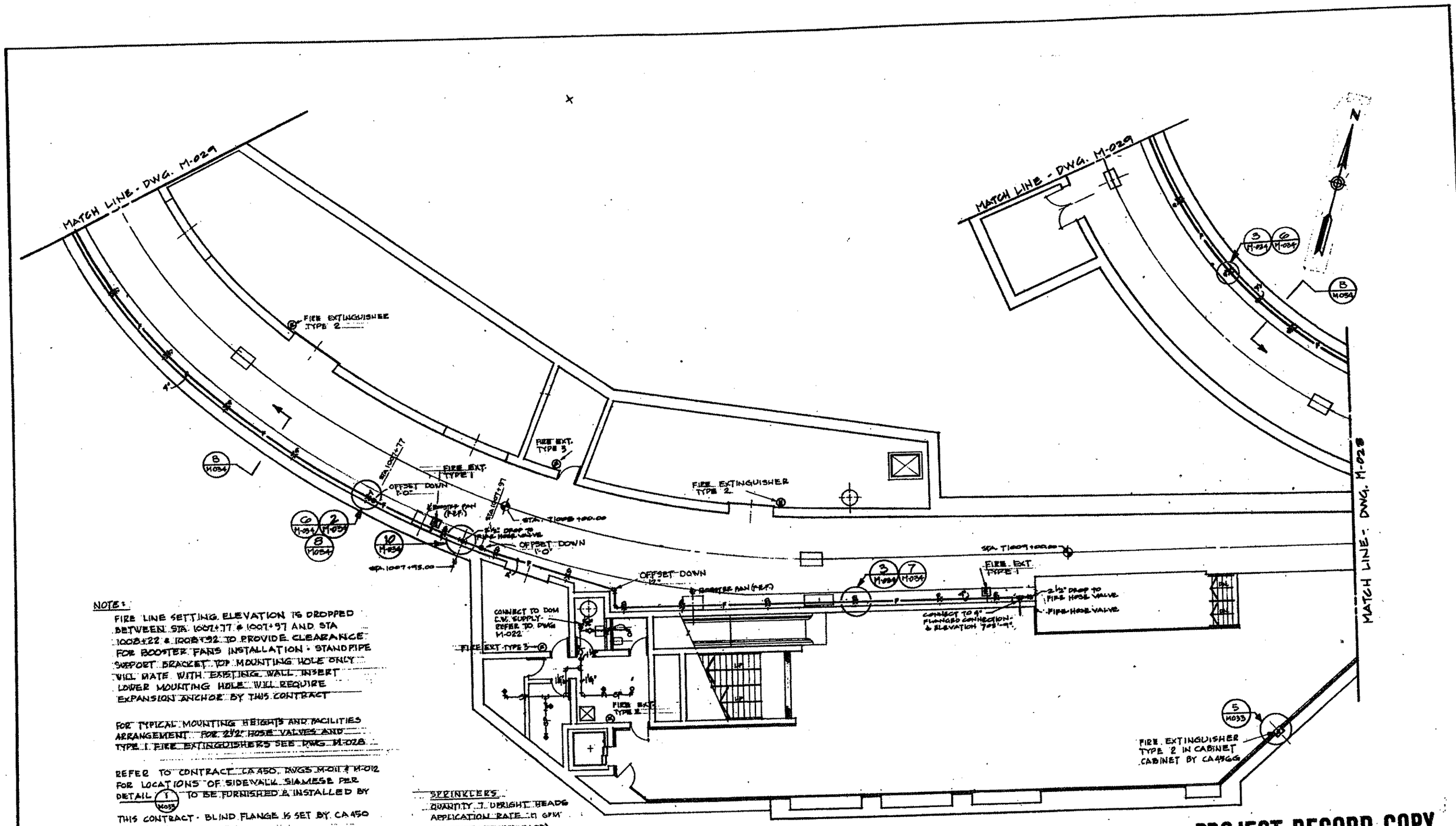

NOTE:

FIRE LINE SETTING ELEVATION IS DROPPED BETWEEN STA. 1007+77 & 1007+97 AND STA 1008+22 & 1008+92 TO PROVIDE CLEARANCE FOR BOOSTER FANS INSTALLATION. STANDPIPE SUPPORT BRACKET TOP MOUNTING HOLE ONLY WILL MATE WITH EXISTING WALL INSERT LOWER MOUNTING HOLE WILL REQUIRE EXPANSION ANCHOR BY THIS CONTRACT

FOR TYPICAL MOUNTING HEIGHTS AND FACILITIES ARRANGEMENT FOR 2½" HOSE VALVES AND TYPE 1 FIRE EXTINGUISHERS SEE DWG M-028

REFER TO CONTRACT CA 450, DWGS M-011 & M-012 FOR LOCATIONS OF SIDEWALL SIAMESE PER DETAIL 1 M033 TO BE FURNISHED & INSTALLED BY THIS CONTRACT. BLIND FLANGE IS SET BY CA 450 CONTRACT

SPRINKLERS
QUANTITY 7 UPRIGHT HEADS
APPLICATION RATE .17 GPM PER SQ FT. (ORD. HAZARD).

PROJECT RECORD COPY

DWG. No	REFERENCE

No.	DATE	DESCRIPTION

REVISIONS

DESIGNED: M.A.P.
DRAWN: S.J.C.
CHECKED: S.J.P.
IN CHARGE: S.J.P.
DATE: JUNE 3, 1983
SCALE: 1/8" = 1'-0"

THE PREPARATION OF THIS DRAWING HAS BEEN FINANCED, IN PART, THROUGH A GRANT FROM THE U. S. DEPARTMENT OF TRANSPORTATION, URBAN MASS TRANSPORTATION ADMINISTRATION UNDER THE URBAN MASS TRANSPORTATION ACT OF 1964, AS AMENDED

PROFESSIONAL ENGINEER ROCCO A. RIZZO

SUBMITTED
DATE

Consulting Engineers
PARSONS BRINCKERHOFF - GIBBS & HILL
APPROVED
DATE

PORT AUTHORITY OF ALLEGHENY COUNTY
PITTSBURGH PENNSYLVANIA

STAGE I LIGHT RAIL TRANSIT SYSTEM
GATEWAY CENTER STATION FINISHES
PLATFORM LEVEL - WEST - FIRE SUPPRESSION

PARSONS BRINCKERHOFF - GIBBS & HILL
A JOINT VENTURE
PITTSBURGH, PENNSYLVANIA

CONTRACT No. CA-456P
DWG. No. M-027-0
SHT.

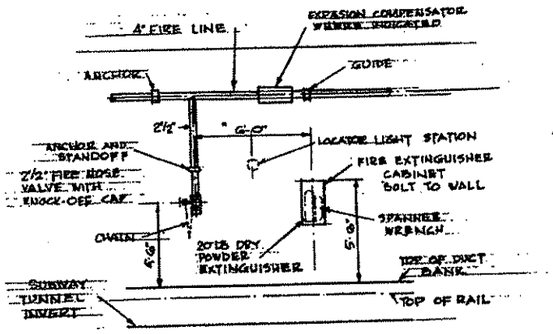

TYPICAL ARRANGEMENT
SUBWAY TUNNEL FIRE SUPPRESSION
FACILITIES - 1/4" = 1'-0"

TYPICAL FOR 2 PLACES - THIS DWG
2 PLACES - DWG M-027
4 PLACES - DWG M-029
3 PLACES - DWG M-030
4 PLACES - DWG M-031

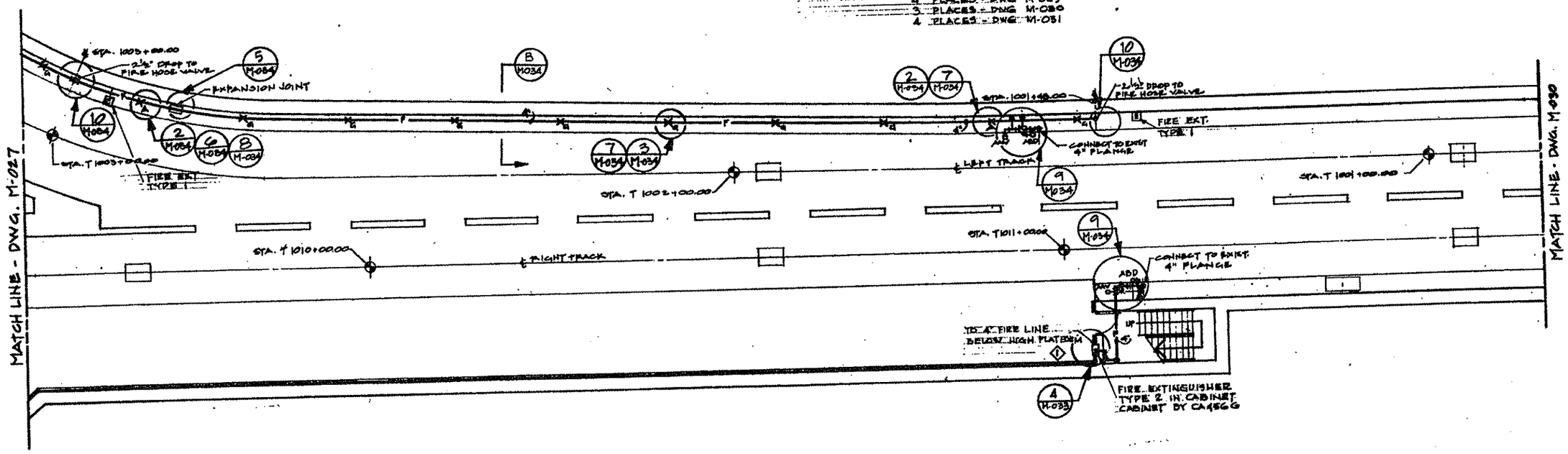

PROJECT RECORD CO

DWG. No.	REFERENCE		
1	2-16-90	AS-BUILT	
NO.	DATE	DESCRIPTION	
		REVISIONS	

DESIGNED: M.A.P.
DRAWN: S.J.C.
CHECKED: S.J.P.
IN CHARGE: S.J.P.
DATE: JUNE 3, 1983
SCALE: 1/8" = 1'-0"

THE PREPARATION OF THIS DRAWING HAS BEEN FINANCED, IN PART, THROUGH A GRANT FROM THE U. S. DEPARTMENT OF TRANSPORTATION, URBAN MASS TRANSPORTATION ADMINISTRATION UNDER THE URBAN MASS TRANSPORTATION ACT OF 1964, AS AMENDED

REGISTERED PROFESSIONAL ENGINEER FOSCO A. RIZZO 30155-E PENNSYLVANIA

SUBMITTED
DATE

Consulting Engineers
PARSONS BRINCKERHOFF - GIBBS & HILL
APPROVED
DATE

PORT AUTHORITY OF ALLEGHENY COU
PITTSBURGH PENNSYL

STAGE I LIGHT RAIL TRANSIT SYSTEM
GATEWAY CENTER STATION FINISHES
PLATFORM LEVEL - EAST - FIRE SUPPRESSIO

PARSONS BRINCKERHOFF - GIBBS & HILL
A JOINT VENTURE
PITTSBURGH, PENNSYLVANIA

CONTRACT NO. CA-456P
DWG. NO. M-028-0

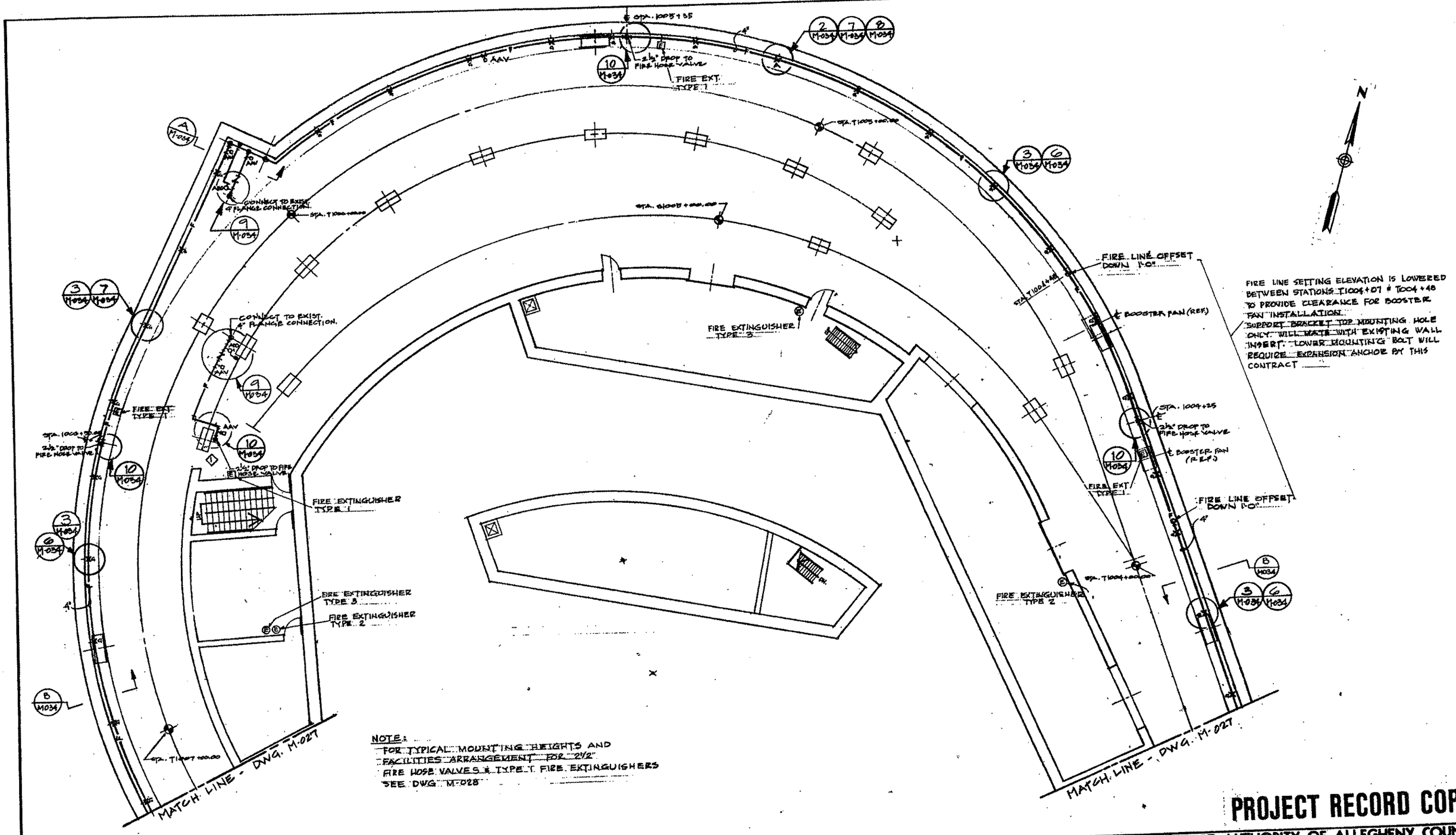

NOTE:
FOR TYPICAL MOUNTING HEIGHTS AND FACILITIES ARRANGEMENT FOR 2½" FIRE HOSE VALVES & TYPE 1 FIRE EXTINGUISHERS SEE DWG. M-028

PROJECT RECORD COP

DWG. No.	REFERENCE

No.	DATE	DESCRIPTION
1	2-16-90	AS-BUILT

REVISIONS

DESIGNED: M.A.P.
DRAWN: S.J.C.
CHECKED: S.J.P.
IN CHARGE: S.J.P.
DATE: JUNE 5, 1983
SCALE: 1/8" = 1'-0"

THE PREPARATION OF THIS DRAWING HAS BEEN FINANCED, IN PART, THROUGH A GRANT FROM THE U. S. DEPARTMENT OF TRANSPORTATION, URBAN MASS TRANSPORTATION ADMINISTRATION UNDER THE URBAN MASS TRANSPORTATION ACT OF 1964, AS AMENDED

COMMONWEALTH OF PENNSYLVANIA REGISTERED PROFESSIONAL ENGINEER ROSARIO A. RIZZO CHOMITZ 201954-E

SUBMITTED
DATE

pbgh Consulting Engineers
PARSONS BRINCKERHOFF - GIBBS & HILL
APPROVED
DATE

PORT AUTHORITY OF ALLEGHENY COUN
PITTSBURGH PENNSYLV

STAGE I LIGHT RAIL TRANSIT SYSTEM
GATEWAY CENTER STATION FINISHES
PLATFORM LEVEL - NORTH - FIRE SUPPRESSI

PARSONS BRINCKERHOFF - GIBBS & HILL
A JOINT VENTURE
PITTSBURGH, PENNSYLVANIA

CONTRACT NO. CA-456P
DWG. NO. M-029-0

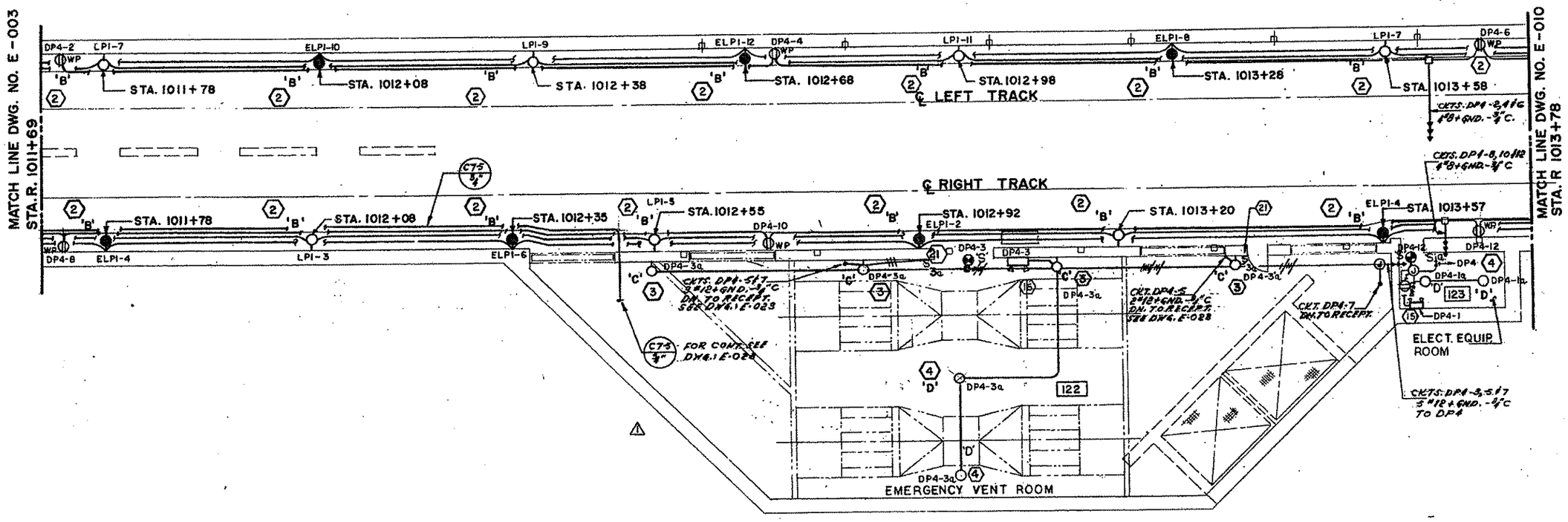

REV. NOTE:
1. ADDED RECEPT'S & INDICATED CKTS. No's & WIRE SIZES

ALL DIMENSIONS AND EXISTING CONDITIONS SHALL BE CHECKED AND VERIFIED BY CONTRACTOR AT THE SITE

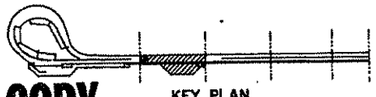

KEY PLAN

PROJECT RECORD COPY

DWG. No.	REFERENCE	NO.	DATE	DESCRIPTION
		2	12/91	GEN'L REVISION & AS BUILT
		1	4-3-84	P.B.G.H. REVISION. (P.C.N.-108)
				SEE REV. NOTE ABOVE

REVISIONS

DESIGNED: DS
DRAWN: TM
CHECKED: DS
IN CHARGE: DS
DATE: 10 MAY 1983
SCALE: 1/8" = 1'-0"

THE PREPARATION OF THIS DRAWING HAS BEEN FINANCED, IN PART, THROUGH A GRANT FROM THE U. S. DEPARTMENT OF TRANSPORTATION, URBAN MASS TRANSPORTATION ADMINISTRATION UNDER THE URBAN MASS TRANSPORTATION ACT OF 1964, AS AMENDED

COMMONWEALTH OF PENNSYLVANIA REGISTERED PROFESSIONAL RAYMOND H. ANTON CLEE

TAP/INPA ARCHITECTS / ENGINEERS

SUBMITTED
3 JUNE 83
DATE

PBGH Consulting Engineers
PARSONS BRINCKERHOFF – GIBBS & HILL

APPROVED
DATE

PORT AUTHORITY OF ALLEGHENY COUNTY
PITTSBURGH PENNSYLVANIA

STAGE I LIGHT RAIL TRANSIT SYSTEM
GATEWAY CENTER STATION FINISHES
LIGHTING PLAN & SECTIONS

PARSONS BRINCKERHOFF – GIBBS & HILL
A JOINT VENTURE
PITTSBURGH, PENNSYLVANIA

CONTRACT No. CA-456-E
DWG. No. E-009-2

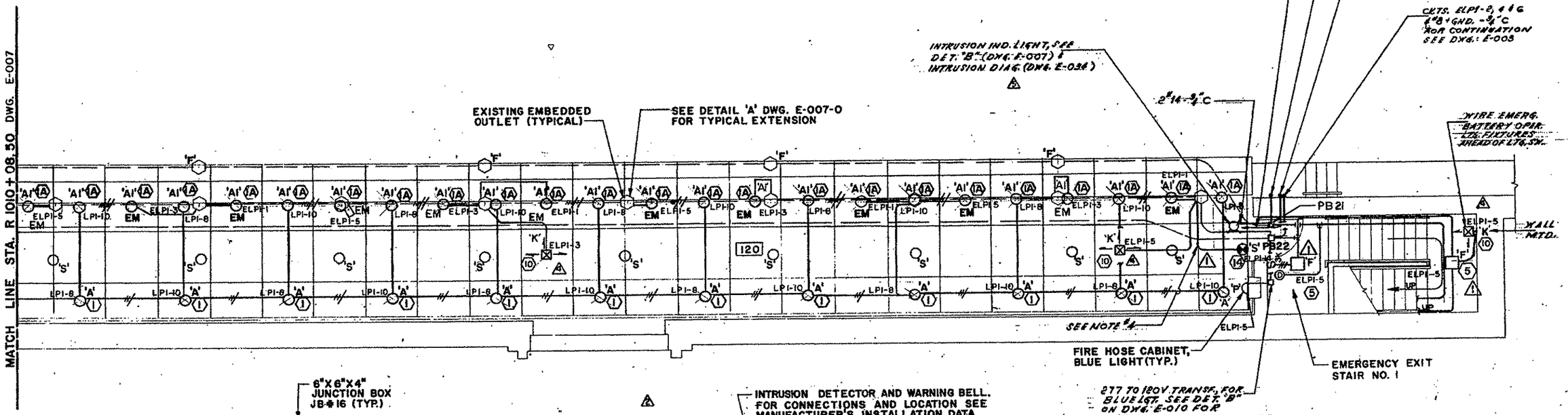

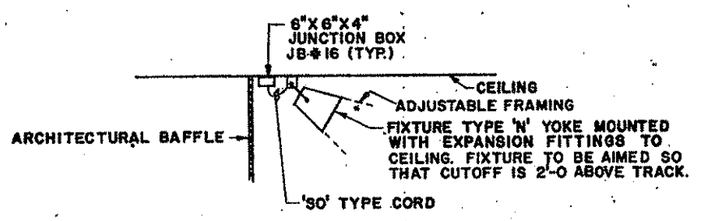

DETAIL 'A'

SCALE: N.T.S.

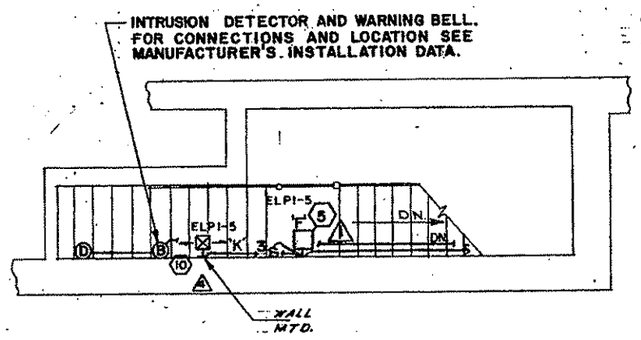

EMERGENCY EXIT STAIR NO. 1

SCALE: 1/4" = 1'-0"

REV. NOTE:
1. CHANGED WIREMOLD TO CONDUIT, INDICATED BRANCH CKT. Nos & WIRE SIZES. CHANGED NOTES #4 & #5

NOTES:

1. 'F' INDICATES SMOKE AND FIRE DETECTION EQUIPMENT.
2. 'S' INDICATES SPEAKER LOCATION, CONDUIT AND WIRE BY OTHERS. NOT IN DA-456E CONTRACT.
3. SMOKE DETECTORS TO BE MOUNTED ON 1'-0" STEM AT CENTER OF BAFFLE
4. EXIT SIGN CKT. ELPI-13 2#12+GND. BACK TO FLASHING CONTROL UNIT IN ROOM #110
5. EM INDICATES LIGHTS ON EMERGENCY CIRCUIT WITH QUARTZ RESTRIKE

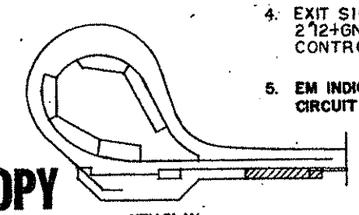

KEY PLAN

ALL DIMENSIONS AND EXISTING CONDITIONS SHALL BE CHECKED ON THE SITE

PROJECT RECORD COPY

No.	DATE	DESCRIPTION
6	12/81	GEN'L REV. & AS BUILT CY-510E
5	5-1-85	ADDED INTRUSION IND. LGTS. CY-510E, CS0-E5 CC
4	8-23-84	ADDED BATTERY OPER. EMERG. LGTS. (P.C.N.-113) CC
3	5-23-84	ADDED NOTE FOR BLUE LGT. (P.C.N.-108)
2	4-3-84	P.B.&.H. REVISION (P.C.N.-108)
		SEE REV. NOTE ABOVE
1	1-18-84	REVISED EXIT CIRCUITING & STAIR LIGHTING

REVISIONS

DWG. No.	REFERENCE

DESIGNED: D.S.
DRAWN: T.M.
CHECKED: D.S.
IN CHARGE: D.S.
DATE: 10 MAY 1983
SCALE: 1/4" = 1'-0

THE PREPARATION OF THIS DRAWING HAS BEEN FINANCED, IN PART, THROUGH A GRANT FROM THE U. S. DEPARTMENT OF TRANSPORTATION, URBAN MASS TRANSPORTATION ADMINISTRATION UNDER THE URBAN MASS TRANSPORTATION ACT OF 1964, AS AMENDED

COMMONWEALTH OF PENNSYLVANIA REGISTERED PROFESSIONAL ENGINEER RAYMOND H. ANTONELLI PE-13190-E

TAP/NPA ARCHITECTS & ENGINEERS

Raymond H. Antonelli
SUBMITTED
3 JUNE 83
DATE

PBGH Consulting Engineers
PARSONS BRINCKERHOFF – GIBBS & HILL
APPROVED
DATE

PORT AUTHORITY OF ALLEGHENY COUNTY
PITTSBURGH PENNSYLVANIA

STAGE I LIGHT RAIL TRANSIT SYSTEM
GATEWAY CENTER STATION FINISHES
LIGHTING PLAN

PARSONS BRINCKERHOFF – GIBBS & HILL A JOINT VENTURE

CONTRACT No. CA-456-E

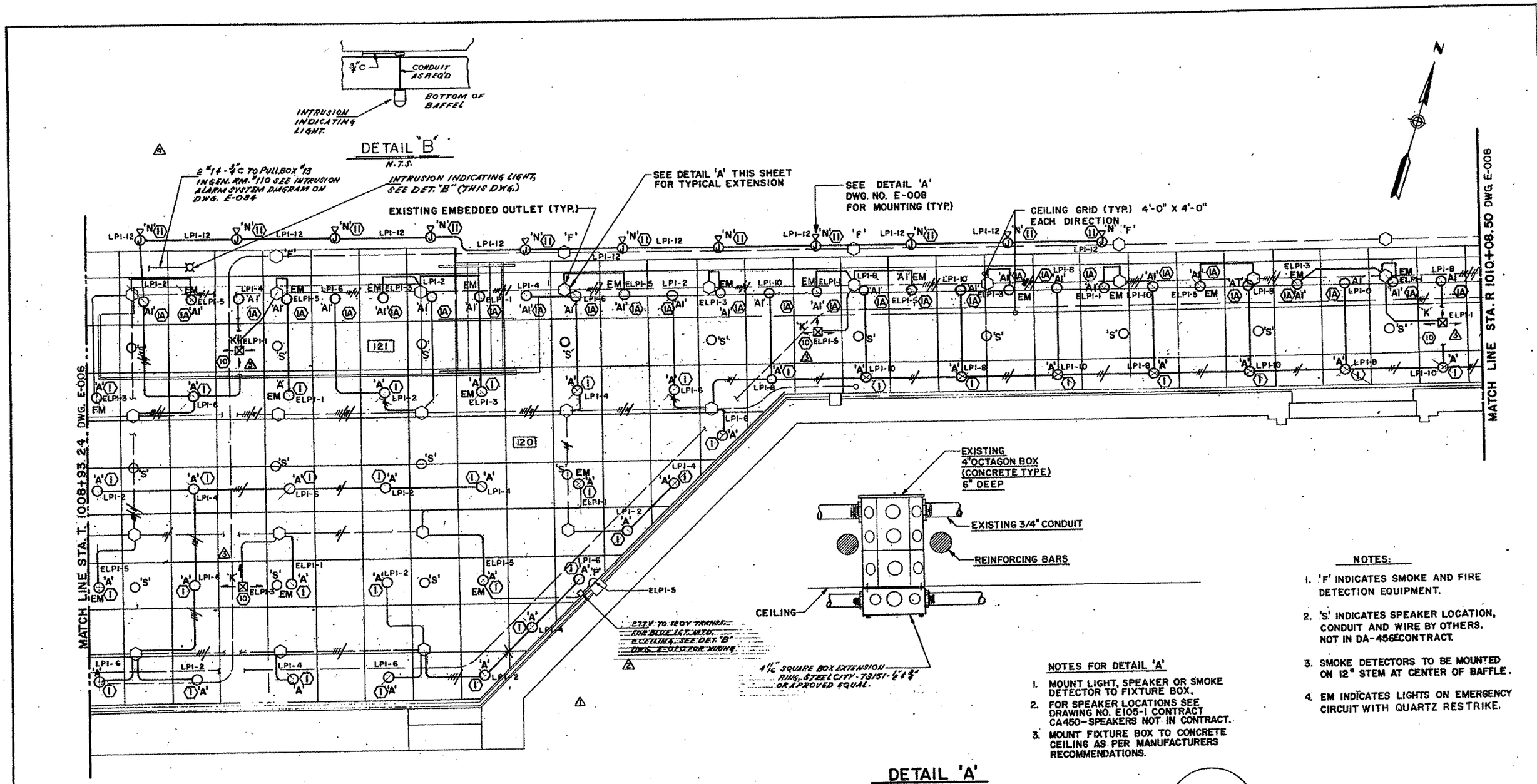

NOTES:

1. 'F' INDICATES SMOKE AND FIRE DETECTION EQUIPMENT.
2. 'S' INDICATES SPEAKER LOCATION, CONDUIT AND WIRE BY OTHERS. NOT IN DA-456E CONTRACT.
3. SMOKE DETECTORS TO BE MOUNTED ON 12" STEM AT CENTER OF BAFFLE.
4. EM INDICATES LIGHTS ON EMERGENCY CIRCUIT WITH QUARTZ RESTRIKE.

NOTES FOR DETAIL 'A'

1. MOUNT LIGHT, SPEAKER OR SMOKE DETECTOR TO FIXTURE BOX.
2. FOR SPEAKER LOCATIONS SEE DRAWING NO. E105-1 CONTRACT CA450-SPEAKERS NOT IN CONTRACT.
3. MOUNT FIXTURE BOX TO CONCRETE CEILING AS PER MANUFACTURERS RECOMMENDATIONS.

REV. NOTE:
1. CHANGED WIREMOLD TO CONDUIT, INDICATED BRANCH CKT. #'S & INDICATED WIRE SIZES.

ALL DIMENSIONS AND EXISTING CONDITIONS SHALL BE CHECKED AND VERIFIED BY CONTRACTOR AT THE SITE.

KEY PLAN

PROJECT RECORD COPY

NO.	DATE	DESCRIPTION
5	12/91	GEN'L REV. & AS BUILT (CY-5101 CSO-83)
4	5-1-85	ADDED INTRUSION LGT. & DET. "B" (CONTR. CY-5101) CC
3	8-23-84	ADDED BATTERY OPER. EMERG. LGTS. (R.C.N.-113) CC
2	5-23-84	ADDED NOTE TO BLUE LGT. (R.C.N.-108) QL
1	1-8-84	P.B.G.H. REVISION (R.C.N.-108)
		SEE REV. NOTE ABOVE

REVISIONS

DWG. No. | REFERENCE

DESIGNED: DS
DRAWN: TM
CHECKED: DS
IN CHARGE: DS
DATE: 10 MAY 1983
SCALE: 1/4" = 1'-0

THE PREPARATION OF THIS DRAWING HAS BEEN FINANCED, IN PART, THROUGH A GRANT FROM THE U. S. DEPARTMENT OF TRANSPORTATION, URBAN MASS TRANSPORTATION ADMINISTRATION UNDER THE URBAN MASS TRANSPORTATION ACT OF 1964, AS AMENDED

COMMONWEALTH OF PENNSYLVANIA — REGISTERED PROFESSIONAL ENGINEER — RAYMOND H. ANTONELLI — PE-13104-E

TAP/NRA ARCHITECTS / ENGINEERS — SUBMITTED 3 JUNE 83 DATE

pbgh Consulting Engineers — PARSONS BRINCKERHOFF - GIBBS & HILL — APPROVED — DATE

PORT AUTHORITY OF ALLEGHENY COUNTY
PITTSBURGH PENNSYLVANIA

STAGE I LIGHT RAIL TRANSIT SYSTEM
GATEWAY CENTER STATION FINISHES
LIGHTING PLAN

PARSONS BRINCKERHOFF - GIBBS & HILL
A JOINT VENTURE
PITTSBURGH, PENNSYLVANIA

CONTRACT NO. CA-456-E
DWG. NO. E-007-5
SHT.

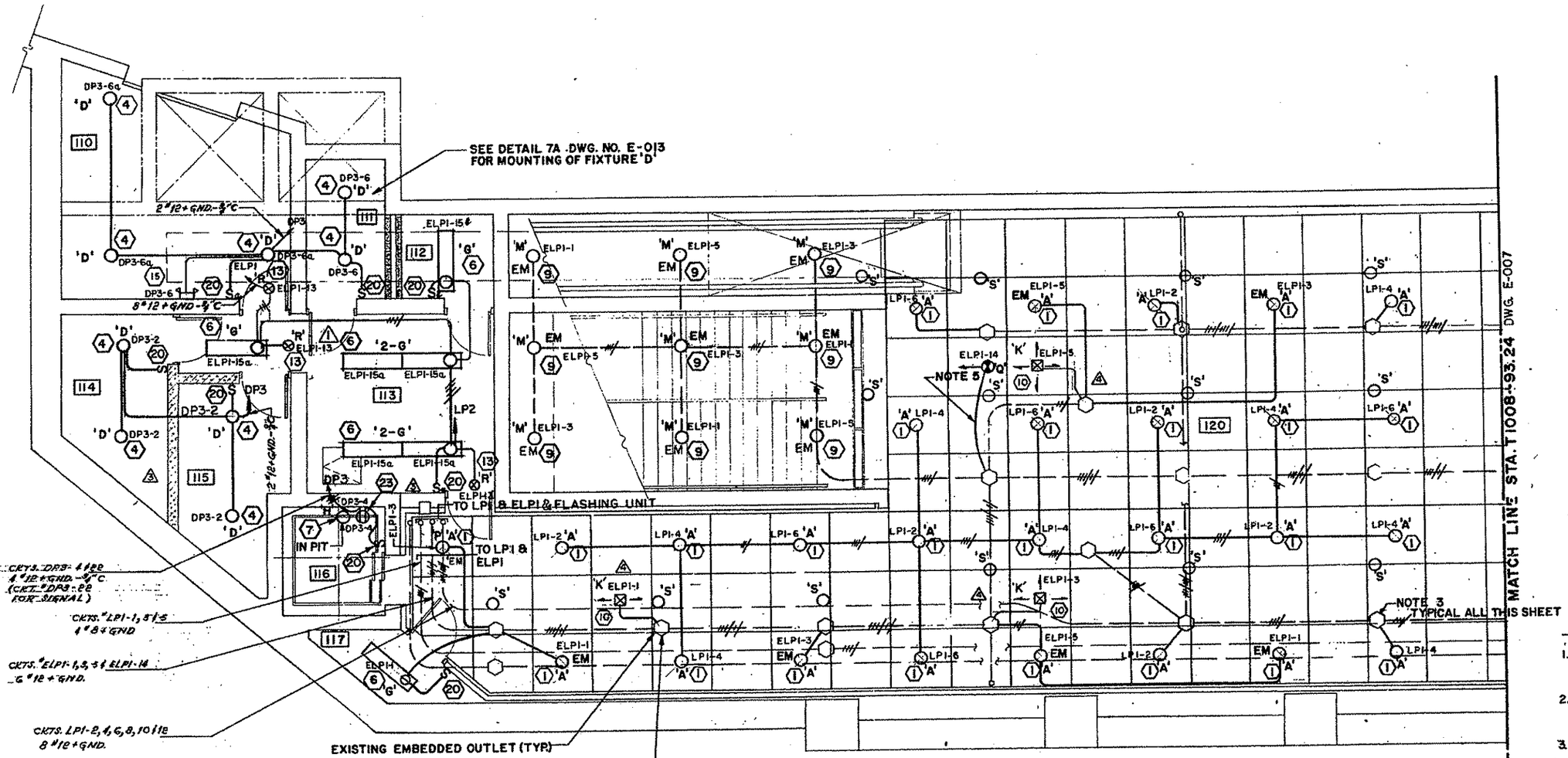

NOTES:

1. CONDUIT SHOWN DASHED IS EXISTING CONDUIT.
2. 'S' INDICATES SPEAKER LOCATION, CONDUIT AND WIRE BY OTHERS. NOT IN DA-456E CONTRACT
3. INDICATES JUNCTION BOX AND EMBEDDED CONDUIT INSTALLED UNDER CONTRACT CA-450, WIRES AND CIRCUITING UNDER THIS CONTRACT.
4. SMOKE DETECTORS TO BE MOUNTED ON 12" STEM AT CENTER OF BAFFLE.

NOTES CONT'D

5. EXIT SIGN CKT. ELP-14, 2 #12+GND. BACK TO FLASHING CONTROL UNIT IN ROOM #110
6. EM IS LIGHT ON EMERGENCY CIRCUIT WITH QUARTZ RESTRIKE.

REV. NOTE:
1. CHANGED WIREMOLD TO CONDUIT, INDICATED BRANCH CKT Nº'S. & WIRE SIZES

ALL DIMENSIONS AND EXISTING CONDITIONS SHALL BE CHECKED AND VERIFIED BY CONTRACTOR AT THE SITE

PROJECT RECORD COPY

KEY PLAN

DWG. No.	REFERENCE

No.	DATE	DESCRIPTION
6	11/91	GEN'L REV. & AS BUILT
5	8-28-84	ADDED BATTERY OPER. EMER. LGTS. (P.C.N.-113) CC
4	5-03-84	CHANGED CIRCUIT Nº'S (P.C.N.-108) QE
3	4-3-84	P.B.G.H. REVISION (P.C.N.-108)
		SEE REV. NOTE ABOVE
1	1-18-84	REVISED EXIT CIRCUITING

REVISIONS

DESIGNED: DS
DRAWN: TM
CHECKED: DS
IN CHARGE: DS
DATE: 10 MAY 1983
SCALE: 1/4" = 1'-0"

THE PREPARATION OF THIS DRAWING HAS BEEN FINANCED, IN PART, THROUGH A GRANT FROM THE U. S. DEPARTMENT OF TRANSPORTATION, URBAN MASS TRANSPORTATION ADMINISTRATION UNDER THE URBAN MASS TRANSPORTATION ACT OF 1964, AS AMENDED

COMMONWEALTH OF PENNSYLVANIA REGISTERED PROFESSIONAL ENGINEER RAYMONDO H. ANTONELLI PE-11194-E

TAP/NRA ARCHITECTS / ENGINEERS
SUBMITTED
3 JUNE 83
DATE

pbgh Consulting Engineers
PARSONS BRINCKERHOFF – GIBBS & HILL
APPROVED
DATE

PORT AUTHORITY OF ALLEGHENY COUNTY
PITTSBURGH PENNSYLVANIA
STAGE I LIGHT RAIL TRANSIT SYSTEM
GATEWAY CENTER STATION FINISHES
LIGHTING PLAN

PARSONS BRINCKERHOFF – GIBBS & HILL
A JOINT VENTURE
PITTSBURGH, PENNSYLVANIA

CONTRACT No. CA-456-E
DWG. No. E-006-5
SHT. 6

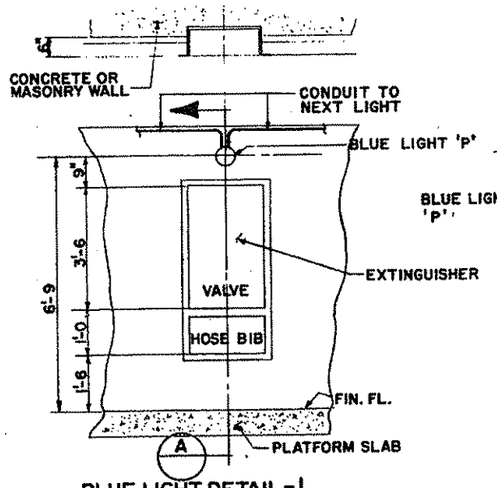

BLUE LIGHT DETAIL-1
EXTINGUISHER, VALVE AND HOSE BIB
N.T.S.

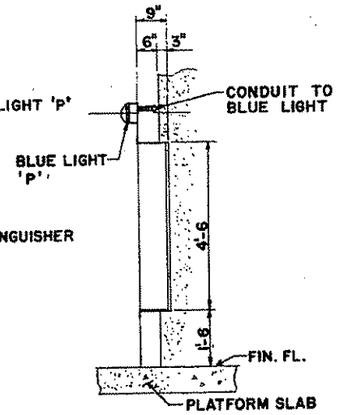

SECTION A
N.T.S.

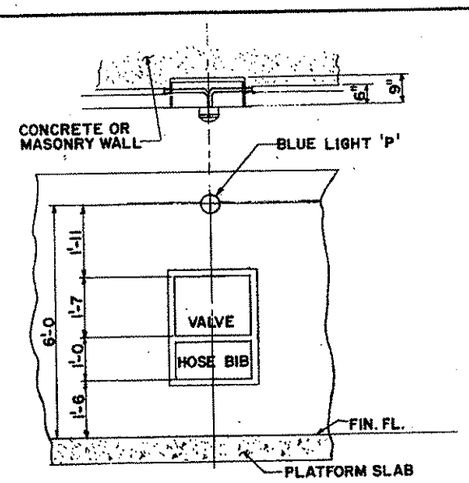

BLUE LIGHT DETAIL-2
VALVE AND HOSE BIB
N.T.S.

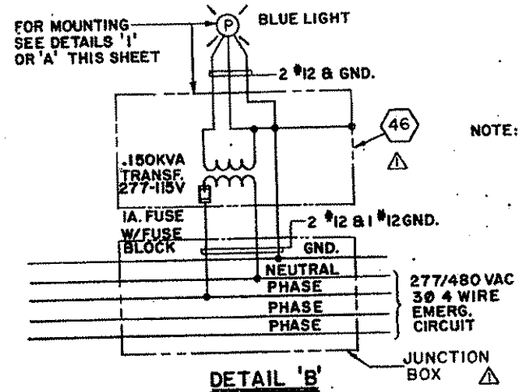

DETAIL 'B'
BLUE LIGHT JUNCTION BOX WIRING DIAGRAM
N.T.S.

NOTE: BLUE LIGHT SHALL BE INSTALLED AT EACH EM PHONE LOCATION THROUGHOUT.

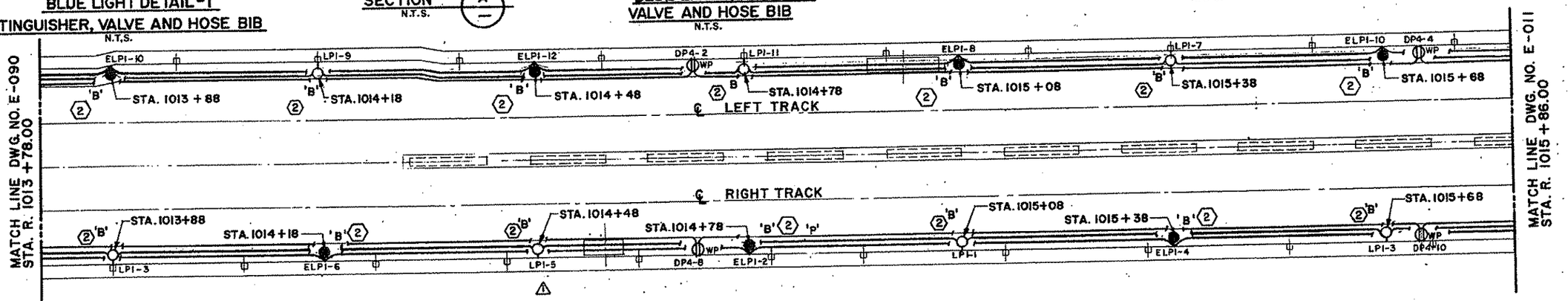

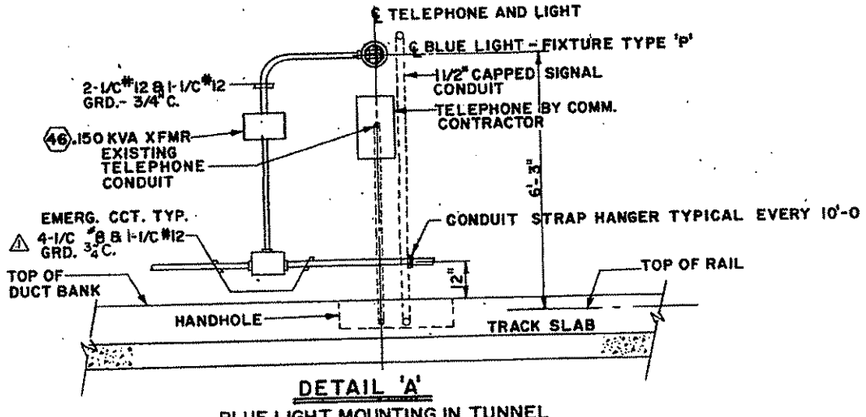

DETAIL 'A'
BLUE LIGHT MOUNTING IN TUNNEL
N.T.S.

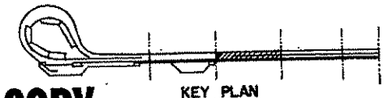

KEY PLAN

ALL DIMENSIONS AND EXISTING CONDITIONS SHALL BE CHECKED BY CONTRACTOR AT THE SITE

REV. NOTE:
1. ADDED RECEPT'S, INDICATED CRT. No's & WIRE SIZES.

PROJECT RECORD COPY

DWG. No.	REFERENCE

No.	DATE	DESCRIPTION
2	12/91	GEN'L. REV. & AS BUILT
1	4-3-84	P.B.G.H. REVISION (P.C.N. 108)
		SEE REV. NOTE ABOVE

REVISIONS

DESIGNED: DS
DRAWN: CF
CHECKED: DS
IN CHARGE: DS
DATE: 10 MAY 1983
SCALE: 1/8" = 1'-0"

THE PREPARATION OF THIS DRAWING HAS BEEN FINANCED, IN PART, THROUGH A GRANT FROM THE U. S. DEPARTMENT OF TRANSPORTATION, URBAN MASS TRANSPORTATION ADMINISTRATION UNDER THE URBAN MASS TRANSPORTATION ACT OF 1964, AS AMENDED

COMMONWEALTH OF PENNSYLVANIA REGISTERED PROFESSIONAL ENGINEER RAYMOND H. APPEL

TAP/NSA ARCHITECTS / ENGINEERS

SUBMITTED
3 JUNE 83
DATE

pbgh Consulting Engineers
PARSONS BRINCKERHOFF - GIBBS & HILL

APPROVED
DATE

PORT AUTHORITY OF ALLEGHENY COUNTY
PITTSBURGH PENNSYLVANIA

STAGE I LIGHT RAIL TRANSIT SYSTEM
GATEWAY CENTER STATION FINISHES
LIGHTING PLAN & SECTIONS

PARSONS BRINCKERHOFF - GIBBS & HILL
A JOINT VENTURE
PITTSBURGH, PENNSYLVANIA

CONTRACT No. CA-456-E
DWG. No. E-010-2
SHT. 7

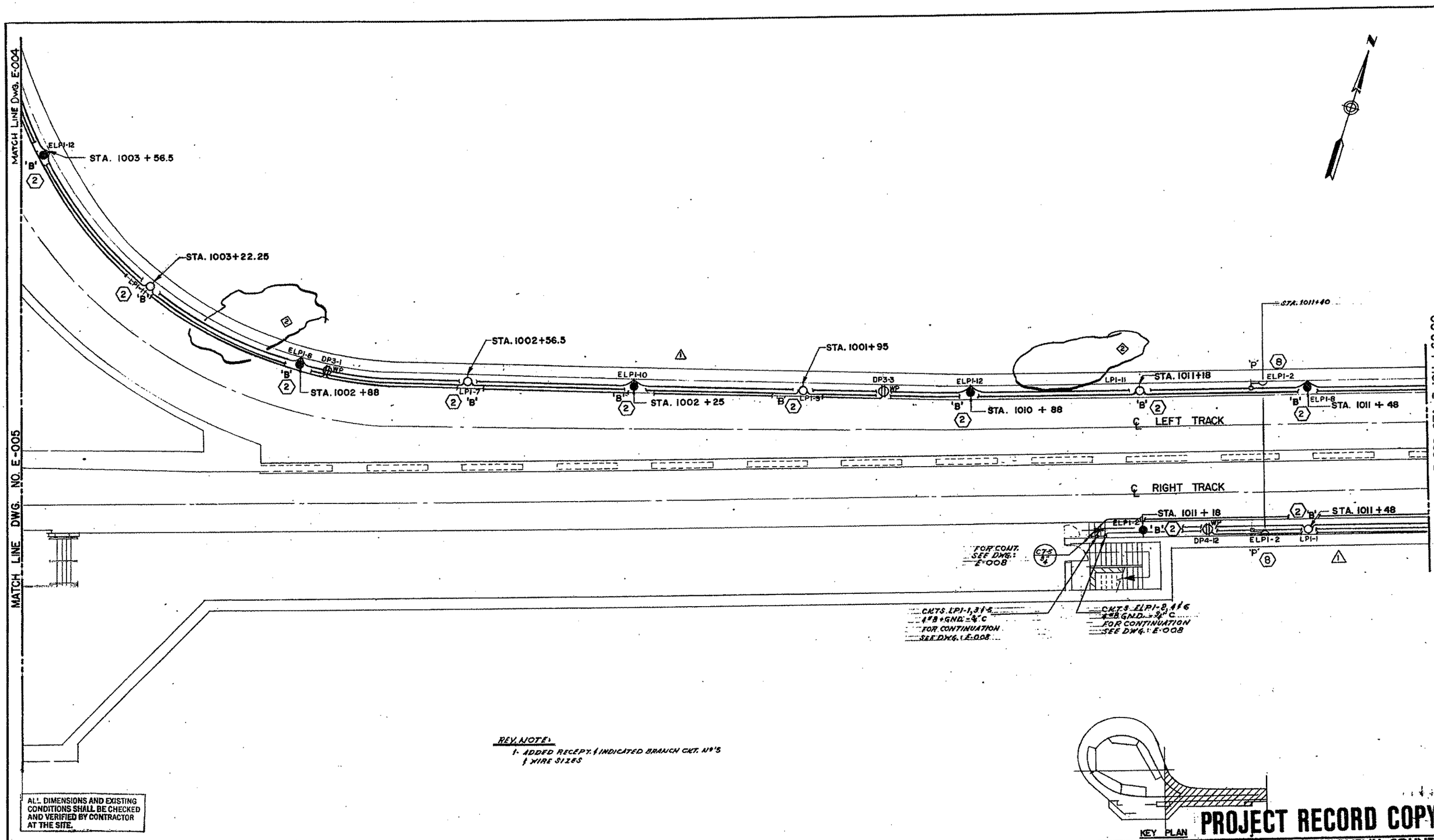

ALL DIMENSIONS AND EXISTING CONDITIONS SHALL BE CHECKED AND VERIFIED BY CONTRACTOR AT THE SITE.

PROJECT RECORD COPY

DWG. No.	REFERENCE

No.	DATE	DESCRIPTION
2	11/91.	REV'D AS SHOWN & AS BUILT
1	4-3-84.	P.B.G.H. REVISION (P.C.N. 108)
		SEE REVISION NOTE ABOVE

REVISIONS

DESIGNED: DS
DRAWN: DEJ
CHECKED: DS
IN CHARGE: DS
DATE: 10 MAY, 1983
SCALE: 1/8"=1'-0'

THE PREPARATION OF THIS DRAWING HAS BEEN FINANCED, IN PART, THROUGH A GRANT FROM THE U. S. DEPARTMENT OF TRANSPORTATION, URBAN MASS TRANSPORTATION ADMINISTRATION UNDER THE URBAN MASS TRANSPORTATION ACT OF 1964, AS AMENDED

COMMONWEALTH OF PENNSYLVANIA — REGISTERED PROFESSIONAL ENGINEER — RAYMOND H. ANTONELLI — PE-13119-E

TAP/NRA ARCHITECTS / ENGINEERS

SUBMITTED
3 JUNE 83
DATE

pbgi Consulting Engineers
PARSONS BRINCKERHOFF – GIBBS & HILL

APPROVED
DATE

PORT AUTHORITY OF ALLEGHENY COUNTY
PITTSBURGH PENNSYLVANIA

STAGE I LIGHT RAIL TRANSIT SYSTEM
GATEWAY CENTER STATION FINISHES
LIGHTING PLAN

PARSONS BRINCKERHOFF – GIBBS & HILL
A JOINT VENTURE
PITTSBURGH, PENNSYLVANIA

CONTRACT No. CA-456-E
DWG. No. E-003-2

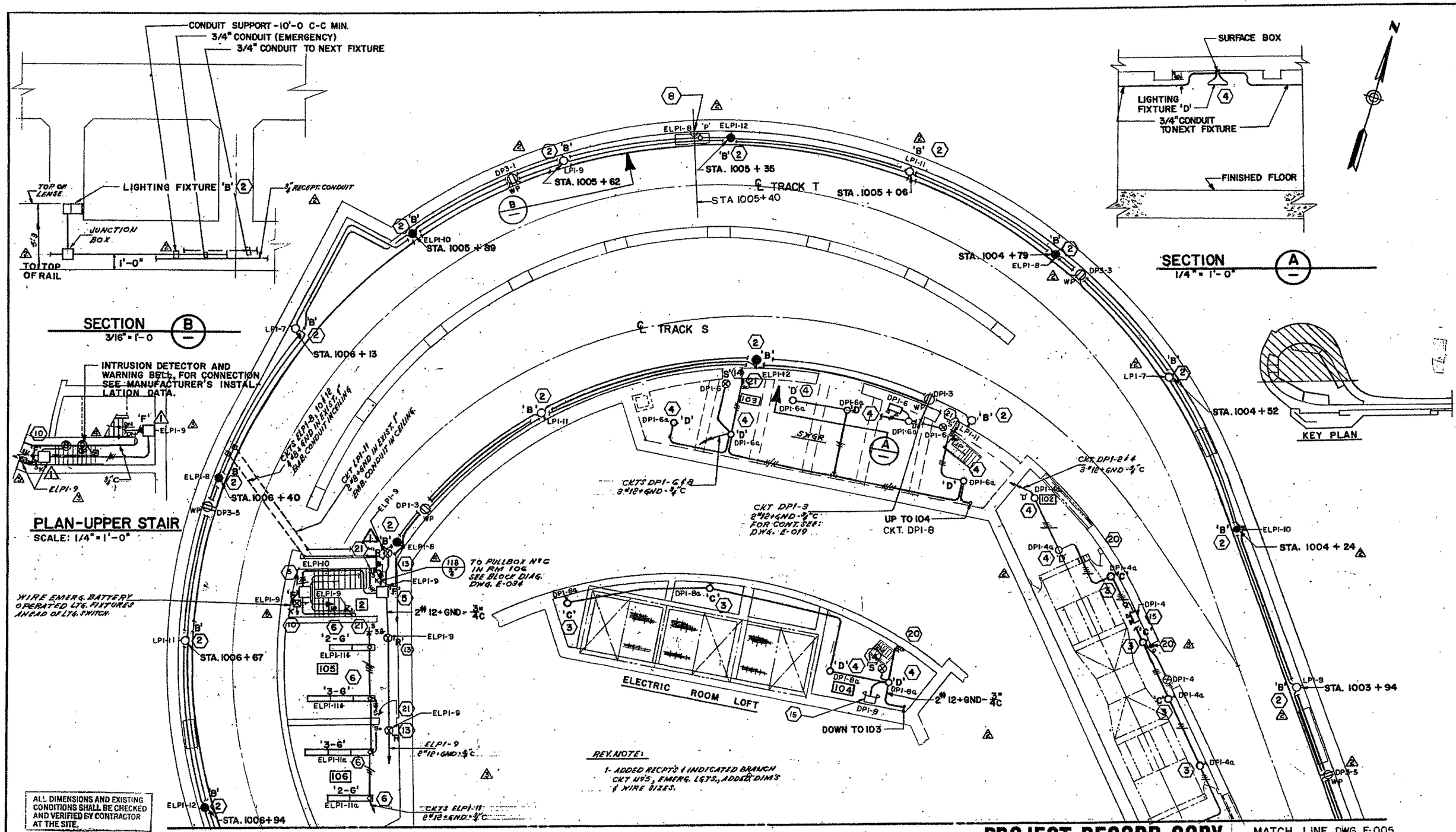

REV. NOTE:
1- ADDED RECPT'S & INDICATED BRANCH CKT NO'S, EMERG. LGTS., ADDED DIM'S & WIRE SIZES.

ALL DIMENSIONS AND EXISTING CONDITIONS SHALL BE CHECKED AND VERIFIED BY CONTRACTOR AT THE SITE.

PROJECT RECORD COPY

No.	DATE	DESCRIPTION	
6	11/91	GEN'L REV. & AS BUILT	
5	8-23-84	ADDED BATTERY FOR EMERG. LGTS. IN STAIRWAY (P.C.N.-113)	CC
4	8-14-84	REVISE INTRUSION ALARM CKTS (P.C.N.-108)	CC
3	5-23-84	ADDED BY-PASS SWITCHES	CC
2	4-3-84	P.B.G.H. REV. (P.C.N.-108)	
		SEE REV. NOTE ABOVE	
1	1-18-84	REVISED STAIR & EXIT LIGHTING	

REVISIONS

DWG. No. | REFERENCE

DESIGNED: DS
DRAWN: TM
CHECKED: DS
IN CHARGE: DS
DATE: 10 MAY 1983
SCALE: 1/8" = 1'-0

THE PREPARATION OF THIS DRAWING HAS BEEN FINANCED, IN PART, THROUGH A GRANT FROM THE U. S. DEPARTMENT OF TRANSPORTATION, URBAN MASS TRANSPORTATION ADMINISTRATION UNDER THE URBAN MASS TRANSPORTATION ACT OF 1964, AS AMENDED

COMMONWEALTH OF PENNSYLVANIA REGISTERED PROFESSIONAL ENGINEER RAYMOND H. ANTONELLI

TAP/NRA ARCHITECTS / ENGINEERS
SUBMITTED
3 JUNE 83
DATE

pbgh Consulting Engineers
PARSONS BRINCKERHOFF - GIBBS & HILL
APPROVED
DATE

PORT AUTHORITY OF ALLEGHENY COUNTY
PITTSBURGH PENNSYLVANIA

STAGE I LIGHT RAIL TRANSIT SYSTEM
GATEWAY CENTER STATION FINISHES
LIGHTING PLAN

PARSONS BRINCKERHOFF - GIBBS & HILL
A JOINT VENTURE
PITTSBURGH, PENNSYLVANIA

CONTRACT No. CA-456-E
DWG. No. E-004-6

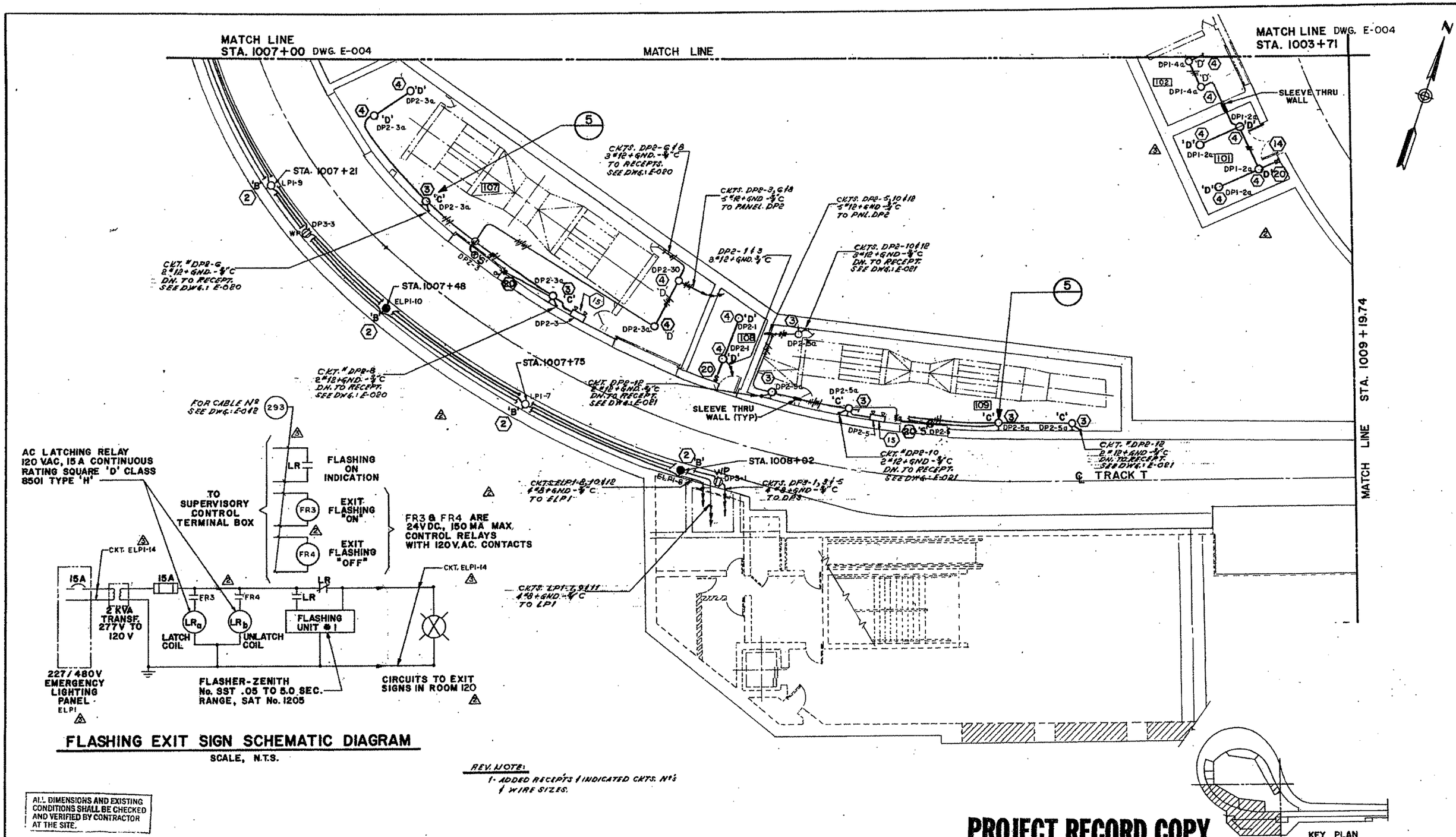

FLASHING EXIT SIGN SCHEMATIC DIAGRAM

SCALE, N.T.S.

REV. NOTE:
1- ADDED RECEPTS & INDICATED CKTS. Nº's & WIRE SIZES.

ALL DIMENSIONS AND EXISTING CONDITIONS SHALL BE CHECKED AND VERIFIED BY CONTRACTOR AT THE SITE.

PROJECT RECORD COPY

DWG. No.	REFERENCE	No.	DATE	REVISIONS	
		6	11/91	AS SHOWN & AS BUILT	
		5	5-23-84	CHANGED CIRCUIT Nº's (P.C.N.-108)	QC
		4	4-3-84	P.B.G.H. REVISION (P.C.N.-108)	
				SEE REV. NOTE ABOVE	
		1	1-18-84	ADD FLASHING EXIT SIGN SCHEMATIC	

DESIGNED: D.S.
DRAWN: D.E.J.
CHECKED: D.S.
IN CHARGE: D.S.
DATE: 10 MAY 1983
SCALE: 1/8" = 1'-0"

THE PREPARATION OF THIS DRAWING HAS BEEN FINANCED, IN PART, THROUGH A GRANT FROM THE U. S. DEPARTMENT OF TRANSPORTATION, URBAN MASS TRANSPORTATION ADMINISTRATION UNDER THE URBAN MASS TRANSPORTATION ACT OF 1964, AS AMENDED

COMMONWEALTH OF PENNSYLVANIA REGISTERED PROFESSIONAL ENGINEER RAYMOND H. ANTONELLI PE-13119-E

TAP/NRA ARCHITECTS / ENGINEERS
SUBMITTED 3 JUNE 83 DATE

pbgh Consulting Engineers
PARSONS BRINCKERHOFF – GIBBS & HILL
APPROVED
DATE

PORT AUTHORITY OF ALLEGHENY COUNTY
PITTSBURGH PENNSYLVANIA
STAGE I LIGHT RAIL TRANSIT SYSTEM
GATEWAY CENTER STATION FINISHES
LIGHTING PLAN

PARSONS BRINCKERHOFF – GIBBS & HILL
A JOINT VENTURE
PITTSBURGH, PENNSYLVANIA

CONTRACT No. CA-456-E
DWG. No. E-005-4

PAAC OCC BLOCK DIAGRAM

Contract - LRS-98-05-R

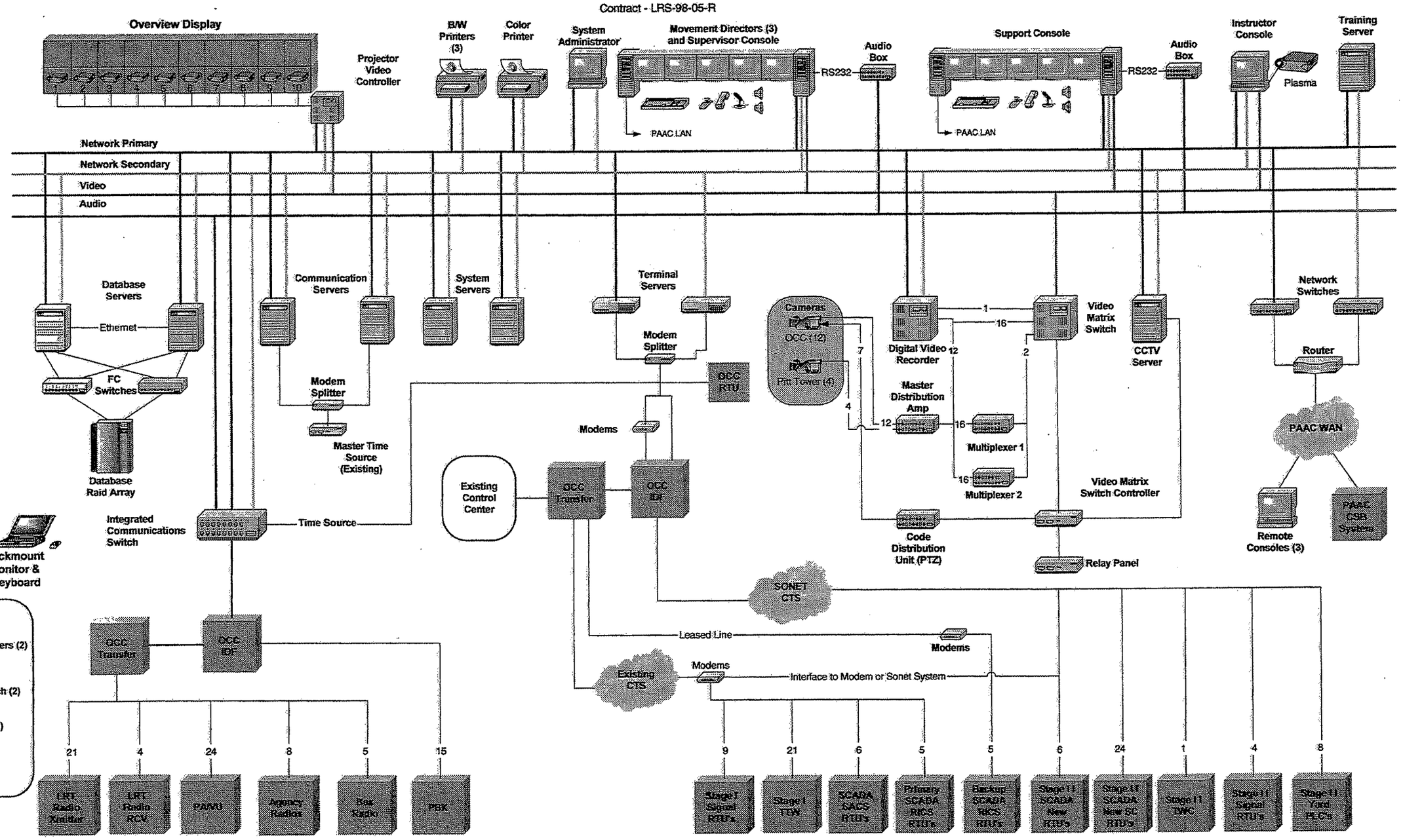

NO.	DATE	DESCRIPTION
1.02	01/07/03	Update per customer comments

THIS DOCUMENT AND ITS CONTENTS HAVE BEEN PREPARED BY UNION SWITCH & SIGNAL INC. OWNERSHIP AND OTHER RIGHTS WITH RESPECT TO THE DOCUMENT ARE DETERMINED BY THE APPLICABLE PROVISIONS OF PORT AUTHORITY OF ALLEGHENY COUNTY CONTRACT NO. LRS-98-05-R (HEREAFTER "THE CONTRACT"). THIS DOCUMENT HAS BEEN FURNISHED TO YOU ON THE FOLLOWING CONDITION: OTHER THAN WHAT IS SPECIFICALLY PROVIDED FOR IN THE CONTRACT, NO RIGHT OR LICENSE IN RESPECT TO THIS DOCUMENT OR ITS CONTENTS IS GIVEN OR WAIVED IN SUPPLYING THE DOCUMENT TO YOU. THIS DOCUMENT OR ITS CONTENTS ARE NOT TO BE USED OR TREATED IN ANY MANNER INCONSISTENT WITH THE RIGHTS OR INTERESTS OF UNION SWITCH & SIGNAL INC.

WARNING

PRIOR TO PLACING THE CIRCUIT SET FORTH ON THIS DRAWING INTO REVENUE SERVICE, THE CIRCUIT AND THE COMPLETE SYSTEM OF WHICH THIS CIRCUIT IS A PART MUST BE TESTED AS FOLLOWS: (A) CIRCUIT SOLICITOR BREAKDOWN TEST (B) SERVICE (OPERATION) TEST

UNION SWITCH & SIGNAL INC.
PITTSBURGH, PA 15219

DESIGNED	HCB	07/03/02 DATE
DRAWN	HCB	07/03/02 DATE
CHECKED	RGF	07/03/02 DATE
APPROVED BY	FLS	01/07/03 DATE

PORT AUTHORITY OF ALLEGHENY COUNTY
STAGE II LIGHT RAIL TRANSIT SYSTEM
OCC Block Diagram

CONTRACT NO.	DRAWING NO.	SHEET NO.	LATEST REVISION
LRS-98-05	CC0010	10	1.02

PORT AUTHORITY OF ALLEGHENY COUNTY

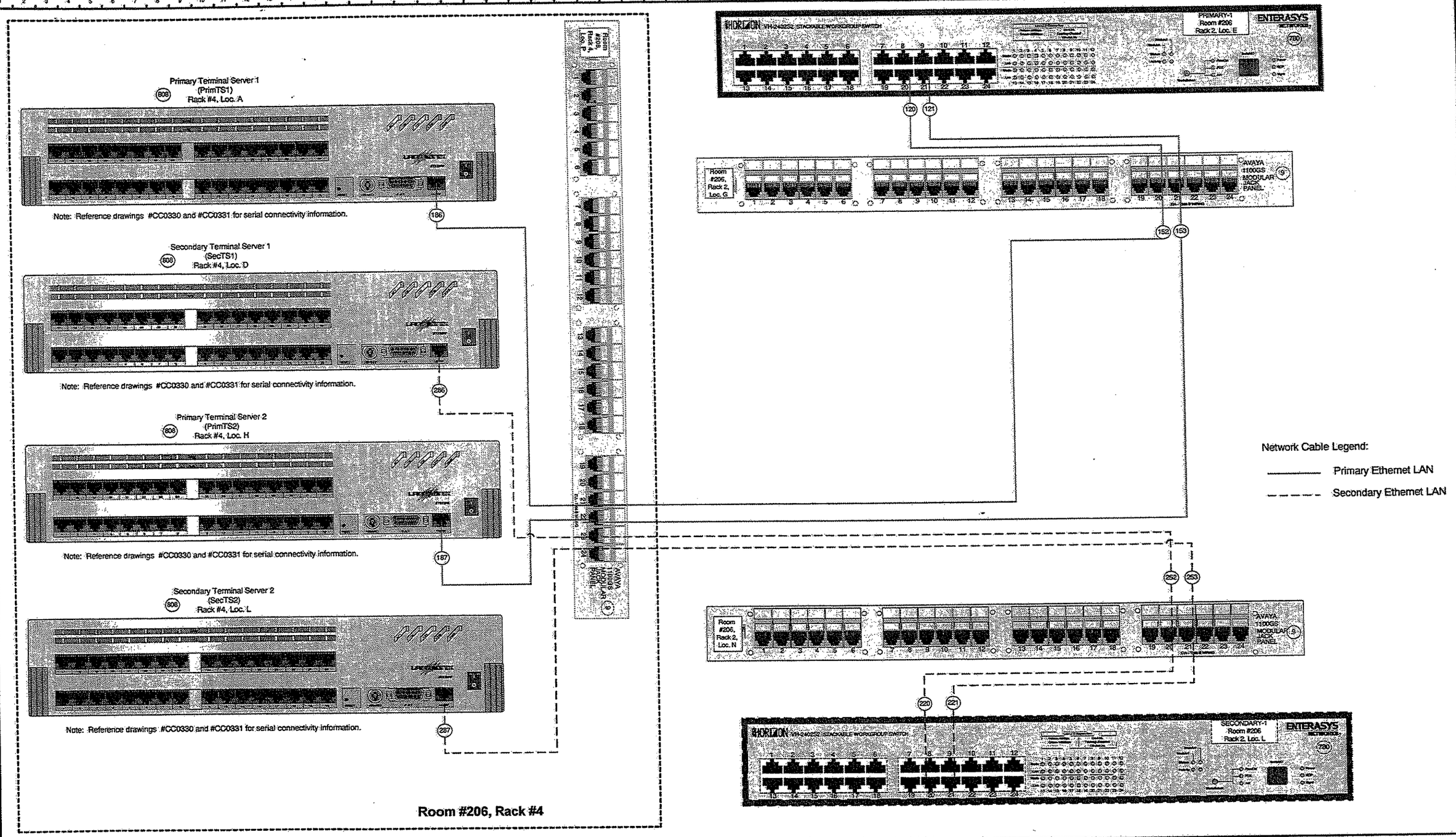

NO.	DATE	DESCRIPTION
1.02	12-10-02	Updated per PAAC Comments

THIS DOCUMENT AND ITS CONTENTS HAVE BEEN PREPARED BY UNION SWITCH & SIGNAL INC. OWNERSHIP AND OTHER RIGHTS WITH RESPECT TO THE DOCUMENT ARE DETERMINED BY THE APPLICABLE PROVISIONS OF PORT AUTHORITY OF ALLEGHENY COUNTY CONTRACT NO. LRS-98-05-R (HEREINAFTER "THE CONTRACT"). THE DOCUMENT HAS BEEN FURNISHED TO YOU ON THE FOLLOWING CONDITION: OTHER THAN WHAT IS SPECIFICALLY PROVIDED FOR IN THE CONTRACT, NO RIGHT OR LICENSE IN RESPECT TO THE DOCUMENT OR ITS CONTENTS IS GIVEN OR WAIVED IN SUPPLYING THE DOCUMENT TO YOU. THE DOCUMENT OR ITS CONTENTS ARE NOT TO BE USED OR TREATED IN ANY MANNER INCONSISTENT WITH THE RIGHTS OR INTERESTS OF UNION SWITCH & SIGNAL INC.

WARNING

PRIOR TO PLACING THE CIRCUIT SET FORTH ON THIS DRAWING INTO REVENUE SERVICE, THE CIRCUIT AND THE COMPLETE SYSTEM OF WHICH THIS CIRCUIT IS A PART MUST BE TESTED AS FOLLOWS:
(1) CIRCUIT SELECTION (BREAKDOWN) TEST
(2) SERVICE (OPERATION) TEST

UNION SWITCH & SIGNAL INC.
PITTSBURGH, PA 15219

		DATE
DESIGNED	MRW	09/18/02
DRAWN	MRW	09/18/02
CHECKED	HCB	09/30/02
APPROVED BY	FLS	12/16/02

PORT AUTHORITY OF ALLEGHENY COUNTY
STAGE II LIGHT RAIL TRANSIT SYSTEM

PAAC OCC Network Diagram
Rack 4 Terminal Server Connections

CONTRACT NO.	DRAWING NO.	SHEET NO.	LATEST REVISION
LRS-98-05-R	CC0208	208	1.02

PORT AUTHORITY OF ALLEGHENY COUNTY

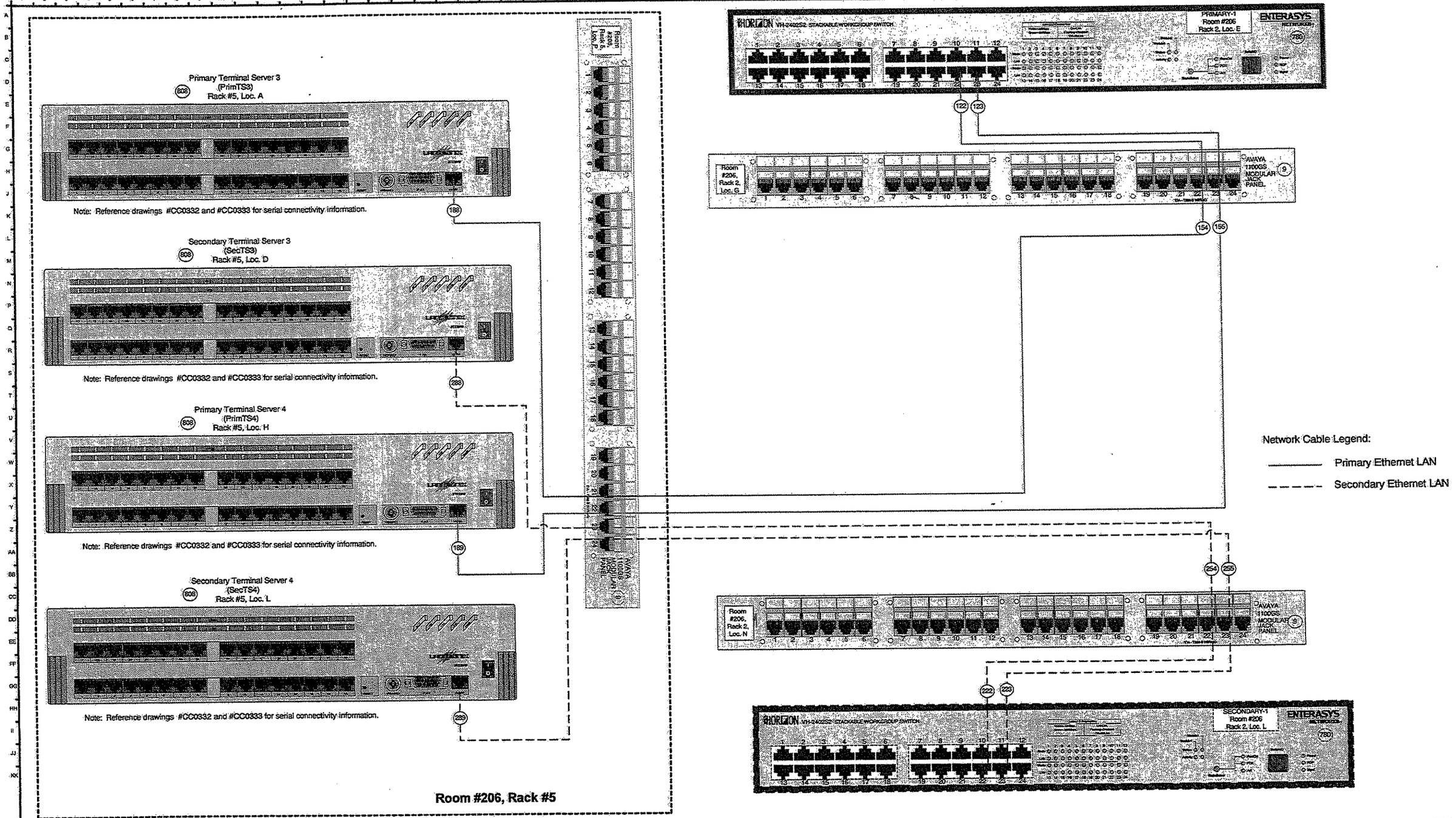

NO.	DATE	DESCRIPTION
1.02	12-10-02	Updated per PAAC Comments

THIS DOCUMENT AND ITS CONTENTS HAVE BEEN PROVIDED BY UNION SWITCH & SIGNAL INC. OWNERSHIP AND OTHER RIGHTS WITH RESPECT TO THE DOCUMENT ARE DETERMINED BY THE APPLICABLE PROVISIONS OF PORT AUTHORITY OF ALLEGHENY COUNTY CONTRACT NO. LRS-98-05-R (HEREAFTER "THE CONTRACT"). THIS DOCUMENT HAS BEEN FURNISHED TO YOU ON THE FOLLOWING CONDITION: OTHER THAN WHAT IS SPECIFICALLY PROVIDED FOR IN THE CONTRACT, NO RIGHT OR LICENSE IN RESPECT TO THIS DOCUMENT OR ITS CONTENTS IS GIVEN OR WAIVED IN SUPPLYING THE DOCUMENT TO YOU. THIS DOCUMENT OR ITS CONTENTS ARE NOT TO BE USED OR TREATED IN ANY MANNER INCONSISTENT WITH THE RIGHTS OR INTERESTS OF UNION SWITCH & SIGNAL INC.

WARNING

PRIOR TO PLACING THE CIRCUIT SET FORTH ON THIS DRAWING INTO PERSONAL SERVICE, THE CIRCUIT AND THE COMPLETE SYSTEM OF WHICH THIS CIRCUIT IS A PART MUST BE TESTED AS FOLLOWS:
(A) CIRCUIT SELECTION (BREAKDOWN) TEST
(B) DEMOC (OPERATION) TEST

UNION SWITCH & SIGNAL INC.
PITTSBURGH, PA 15219

DESIGNED	MRW	09/18/02 DATE
DRAWN	MRW	09/18/02 DATE
CHECKED	HCB	09/30/02 DATE
APPROVED BY	FLS	12/16/02 DATE

PORT AUTHORITY OF ALLEGHENY COUNTY
STAGE II LIGHT RAIL TRANSIT SYSTEM

PAAC OCC Network Diagram
Rack 5 Terminal Server Connections

CONTRACT NO.	DRAWING NO.	SHEET NO.	LATEST REVISION
LRS-98-05-R	CC0209	209	1.02

PORT AUTHORITY OF ALLEGHENY COUNTY

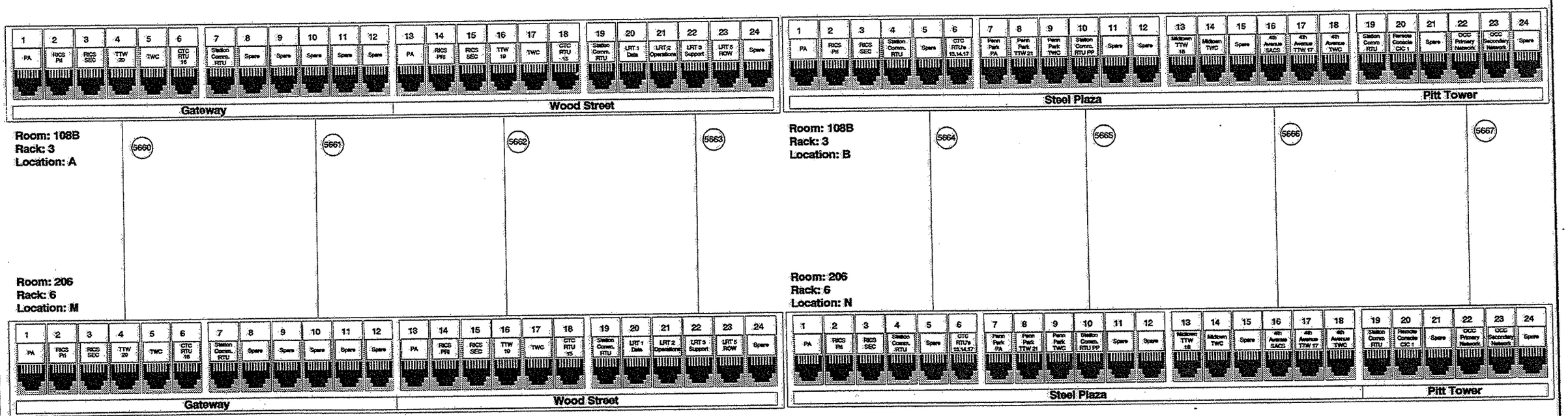

NO.	DATE	DESCRIPTION
1.02	12/12/02	Changed Remote CIC

THIS DOCUMENT AND ITS CONTENTS HAVE BEEN PREPARED BY UNION SWITCH & SIGNAL INC. OWNERSHIP AND OTHER RIGHTS WITH RESPECT TO THE DOCUMENT ARE DETERMINED BY THE APPLICABLE PROVISIONS OF PORT AUTHORITY OF ALLEGHENY COUNTY CONTRACT NO. LRS-98-05-R (HEREAFTER "THE CONTRACT"). THIS DOCUMENT HAS BEEN FURNISHED TO YOU ON THE FOLLOWING CONDITION: OTHER THAN WHAT IS SPECIFICALLY PROVIDED FOR IN THE CONTRACT, NO RIGHT OR LICENSE IN RESPECT TO THIS DOCUMENT OR ITS CONTENTS IS GIVEN OR WAIVED IN SUPPLYING THE DOCUMENT TO YOU. THIS DOCUMENT OR ITS CONTENTS ARE NOT TO BE USED OR TREATED IN ANY MANNER INCONSISTENT WITH THE RIGHTS OR INTERESTS OF UNION SWITCH & SIGNAL INC.

WARNING

PRIOR TO PLACING THE CIRCUIT BEZ FORTH ON THIS DRAWING INTO REVENUE SERVICE, THE CIRCUIT AND THE COMPLETE SYSTEM OF WHICH THIS CIRCUIT IS A PART MUST BE TESTED AS FOLLOWS:
(a) CIRCUIT SELECTION (BREAKDOWN TEST
(b) SERVICE (OPERATION) TEST

UNION SWITCH & SIGNAL INC.
PITTSBURGH, PA 15219

DESIGNED	HCB	08/29/02 DATE
DRAWN	HCB	08/29/02 DATE
CHECKED	RGF	08/29/02 DATE
APPROVED BY	FLS	12/12/02 DATE

PORT AUTHORITY OF ALLEGHENY COUNTY
STAGE II LIGHT RAIL TRANSIT SYSTEM

IDF 1st Floor to 2nd Floor Wiring (1 of 8)

CONTRACT NO.	DRAWING NO.	SHEET NO.	LATEST REVISION
LRS-98-05	CC321	321	1.02

PORT AUTHORITY OF ALLEGHENY COUNTY

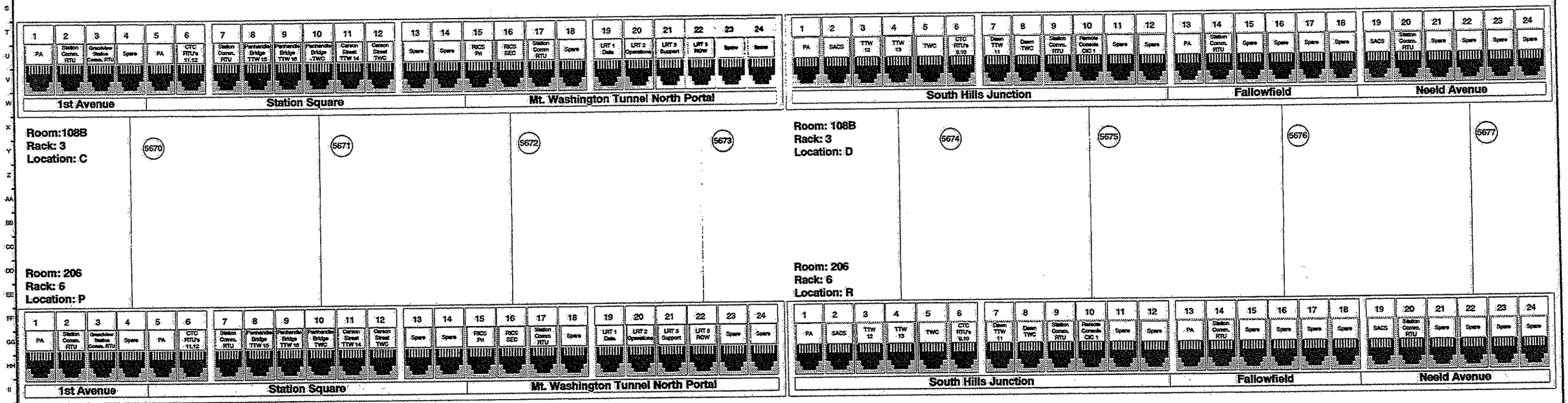

NO.	DATE	DESCRIPTION
1.02	12/12/02	Changed Remote CIC

THIS DOCUMENT AND ITS CONTENTS HAVE BEEN PREPARED BY UNION SWITCH & SIGNAL INC. OWNERSHIP AND OTHER RIGHTS WITH RESPECT TO THE DOCUMENT ARE DETERMINED BY THE APPLICABLE PROVISIONS OF PORT AUTHORITY OF ALLEGHENY COUNTY CONTRACT NO. LRS-98-05R (HEREAFTER "THE CONTRACT"). THIS DOCUMENT HAS BEEN FURNISHED TO YOU ON THE FOLLOWING CONDITION: OTHER THAN WHAT IS SPECIFICALLY PROVIDED FOR IN THE CONTRACT, NO RIGHT OR LICENSE IN RESPECT TO THIS DOCUMENT OR ITS CONTENTS IS GIVEN OR IMPLIED IN SUPPLYING THE DOCUMENT TO YOU. THIS DOCUMENT OR ITS CONTENTS ARE NOT TO BE USED OR TREATED IN ANY MANNER INCONSISTENT WITH THE RIGHTS OR INTERESTS OF UNION SWITCH & SIGNAL INC.

WARNING

PRIOR TO PLACING THE CIRCUIT BEY FORTH ON THIS DRAWING INTO REVENUE SERVICE, THE CIRCUIT AND THE COMPLETE SYSTEM OF WHICH THIS CIRCUIT IS A PART MUST BE TESTED AS FOLLOWS:
(1) CIRCUIT SELECTION (BREAKDOWN) TEST
(2) SERVICE (OPERATION) TEST

UNION SWITCH & SIGNAL INC.
PITTSBURGH, PA 15219

DESIGNED	HCB	08/29/02 DATE
DRAWN	HCB	08/29/02 DATE
CHECKED	RGF	08/29/02 DATE
APPROVED BY	FLS	12/12/02 DATE

PORT AUTHORITY OF ALLEGHENY COUNTY
STAGE II LIGHT RAIL TRANSIT SYSTEM

IDF 1st Floor to 2nd Floor Wiring (2 of 8)

CONTRACT NO.	DRAWING NO.	SHEET NO.	LATEST REVISION
LRS-98-05	CC322	322	1.02

PORT AUTHORITY OF ALLEGHENY COUNTY

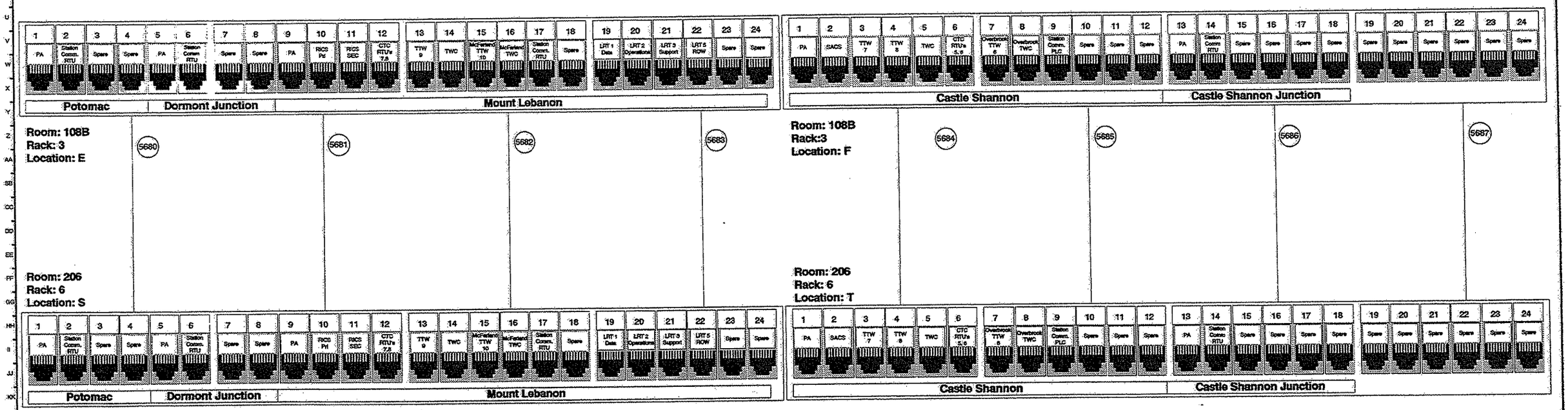

NO.	DATE	DESCRIPTION
1.02	12/12/02	Updated CTC RTU Number

THIS DOCUMENT AND ITS CONTENTS HAVE BEEN PREPARED BY UNION SWITCH & SIGNAL INC. OWNERSHIP AND OTHER RIGHTS WITH RESPECT TO THE DOCUMENT ARE DETERMINED BY THE APPLICABLE PROVISIONS OF PORT AUTHORITY OF ALLEGHENY COUNTY CONTRACT NO. LRS-98-05 (HEREAFTER THE CONTRACT). THIS DOCUMENT HAS BEEN FURNISHED TO YOU ON THE FOLLOWING CONDITION: OTHER THAN WHAT IS SPECIFICALLY PROVIDED FOR IN THE CONTRACT, NO RIGHT OR LICENSE IN RESPECT TO THIS DOCUMENT OR ITS CONTENTS IS GIVEN OR WAIVED IN SUPPLYING THE DOCUMENT TO YOU. THIS DOCUMENT OR ITS CONTENTS ARE NOT TO BE USED OR TREATED IN ANY MANNER INCONSISTENT WITH THE RIGHTS OR INTERESTS OF UNION SWITCH & SIGNAL INC.

WARNING

PRIOR TO PLACING THE CIRCUIT SET FORTH ON THIS DRAWING INTO INDIVIDUAL SERVICE, THE CIRCUIT AND THE COMPLETE SYSTEM OF WHICH THIS CIRCUIT IS A PART MUST BE TESTED AS FOLLOWS:
(1) CIRCUIT INSULATION (BREAKDOWN) TEST
(2) SERVICE (OPERATION) TEST

UNION SWITCH & SIGNAL INC.
PITTSBURGH, PA 15219

DESIGNED	HCB	08/29/02 DATE
DRAWN	HCB	08/29/02 DATE
CHECKED	RGF	08/29/02 DATE
APPROVED BY	FLS	12/12/02 DATE

PORT AUTHORITY OF ALLEGHENY COUNTY
STAGE II LIGHT RAIL TRANSIT SYSTEM

IDF 1st Floor to 2nd Floor Wiring (3 of 8)

CONTRACT NO.	DRAWING NO.	SHEET NO.	LATEST REVISION
LRS-98-05	CC323	323	1.02

PORT AUTHORITY OF ALLEGHENY COUNTY

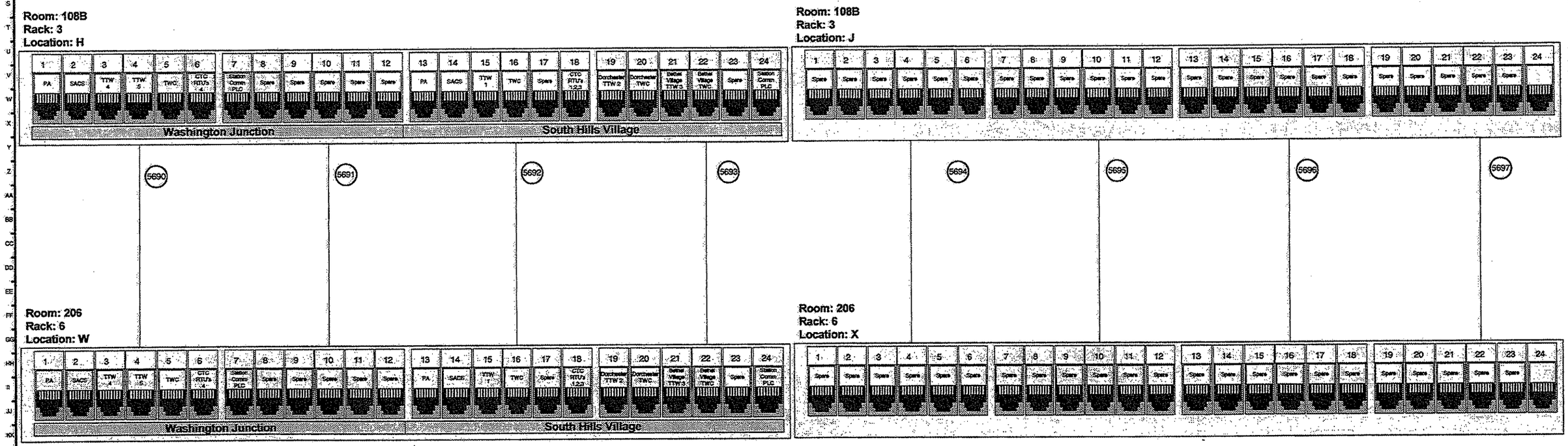

NO.	DATE	DESCRIPTION

THIS DOCUMENT AND ITS CONTENTS HAVE BEEN PREPARED BY UNION SWITCH & SIGNAL INC. OWNERSHIP AND OTHER RIGHTS WITH RESPECT TO THE DOCUMENT ARE DETERMINED BY THE APPLICABLE PROVISIONS OF PORT AUTHORITY OF ALLEGHENY COUNTY CONTRACT NO. LRS-98-05-R (HEREINAFTER "THE CONTRACT"). THIS DOCUMENT HAS BEEN FURNISHED TO YOU ON THE FOLLOWING CONDITION: OTHER THAN WHAT IS SPECIFICALLY PROVIDED FOR IN THE CONTRACT, NO RIGHT OR LICENSE IN RESPECT TO THIS DOCUMENT OR ITS CONTENTS IS GIVEN OR WAIVED IN SUPPLYING THE DOCUMENT TO YOU. THIS DOCUMENT OR ITS CONTENTS ARE NOT TO BE USED OR TREATED IN ANY MANNER INCONSISTENT WITH THE RIGHTS OR INTERESTS OF UNION SWITCH & SIGNAL INC.

WARNING

PRIOR TO PLACING THE CIRCUIT SET FORTH ON THIS DRAWING INTO REVENUE SERVICE, THE CIRCUIT AND THE COMPLETE SYSTEM OF WHICH THIS CIRCUIT IS A PART MUST BE TESTED AS FOLLOWS:
(a) CIRCUIT SELECTION (BREAKDOWN) TEST
(b) SERVICE (OPERATION) TEST

UNION SWITCH & SIGNAL INC.
PITTSBURGH, PA 15219

DESIGNED	HCB	08/23/02 DATE
DRAWN	HCB	08/23/02 DATE
CHECKED	RGF	08/23/02 DATE
APPROVED BY	FLS	01/06/03 DATE

PORT AUTHORITY OF ALLEGHENY COUNTY
STAGE II LIGHT RAIL TRANSIT SYSTEM

IDF 1st Floor to 2nd Floor Wiring (4 of 8)

CONTRACT NO.	DRAWING NO.	SHEET NO.	LATEST REVISION
LRS-98-05	CC324	324	

PORT AUTHORITY OF ALLEGHENY COUNTY

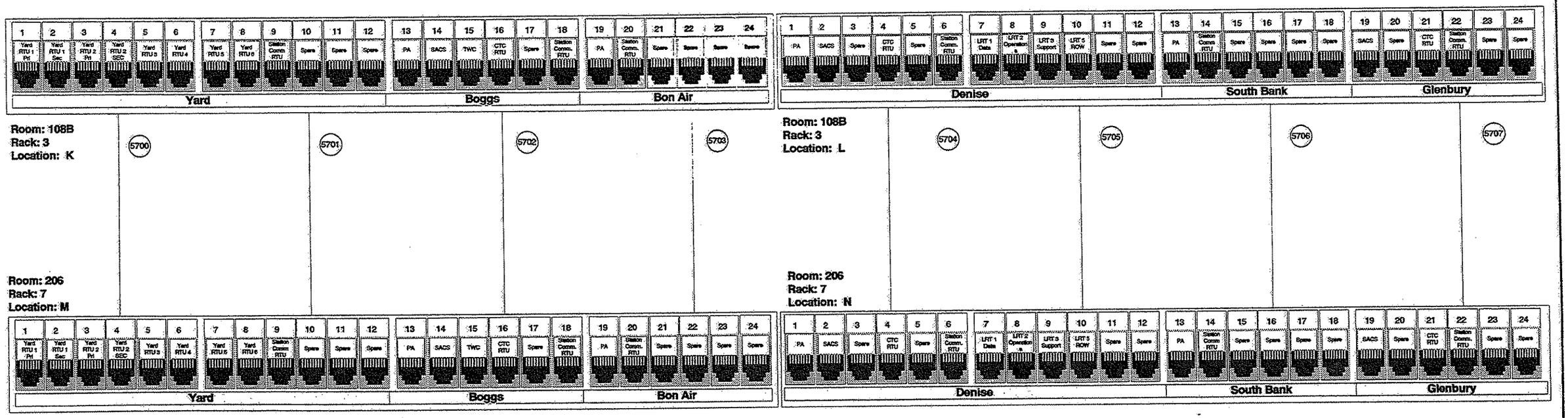

NO.	DATE	DESCRIPTION
1.02	12/12/02	Remove TWC Denise, Glenbury

THIS DOCUMENT AND ITS CONTENTS HAVE BEEN PREPARED BY UNION SWITCH & SIGNAL INC. OWNERSHIP AND OTHER RIGHTS WITH RESPECT TO THE DOCUMENT ARE DETERMINED BY THE APPLICABLE PROVISIONS OF PORT AUTHORITY OF ALLEGHENY COUNTY CONTRACT NO. LRS-98-05-R (HEREINAFTER "THE CONTRACT"). THIS DOCUMENT HAS BEEN FURNISHED TO YOU ON THE FOLLOWING CONDITION: OTHER THAN WHAT IS SPECIFICALLY PROVIDED FOR IN THE CONTRACT, NO RIGHT OR LICENSE IN RESPECT TO THIS DOCUMENT OR ITS CONTENTS IS GIVEN OR WAIVED IN SUPPLYING THE DOCUMENT TO YOU. THIS DOCUMENT OR ITS CONTENTS ARE NOT TO BE USED OR TREATED IN ANY MANNER INCONSISTENT WITH THE RIGHTS OR INTERESTS OF UNION SWITCH & SIGNAL INC.

WARNING

PRIOR TO PLACING THE CIRCUIT SET FORTH ON THIS DRAWING INTO REVENUE SERVICE, THE CIRCUIT AND THE COMPLETE SYSTEM OF WHICH THIS CIRCUIT IS A PART MUST BE TESTED AS FOLLOWS:
(1) CIRCUIT SELECTION (BREAKDOWN) TEST
(2) SERVICE OPERATION TEST

UNION SWITCH & SIGNAL INC.
PITTSBURGH, PA 15219

DESIGNED	HCB	08/29/02 DATE
DRAWN	HCB	08/29/02 DATE
CHECKED	RGF	08/29/02 DATE
APPROVED BY	FLS	12/12/02 DATE

PORT AUTHORITY OF ALLEGHENY COUNTY
STAGE II LIGHT RAIL TRANSIT SYSTEM

IDF 1st Floor to 2nd Floor Wiring (5 of 8)

CONTRACT NO.	DRAWING NO.	SHEET NO.	LATEST REVISION
LRS-98-05	CC325	325	1.02

PORT AUTHORITY OF ALLEGHENY COUNTY

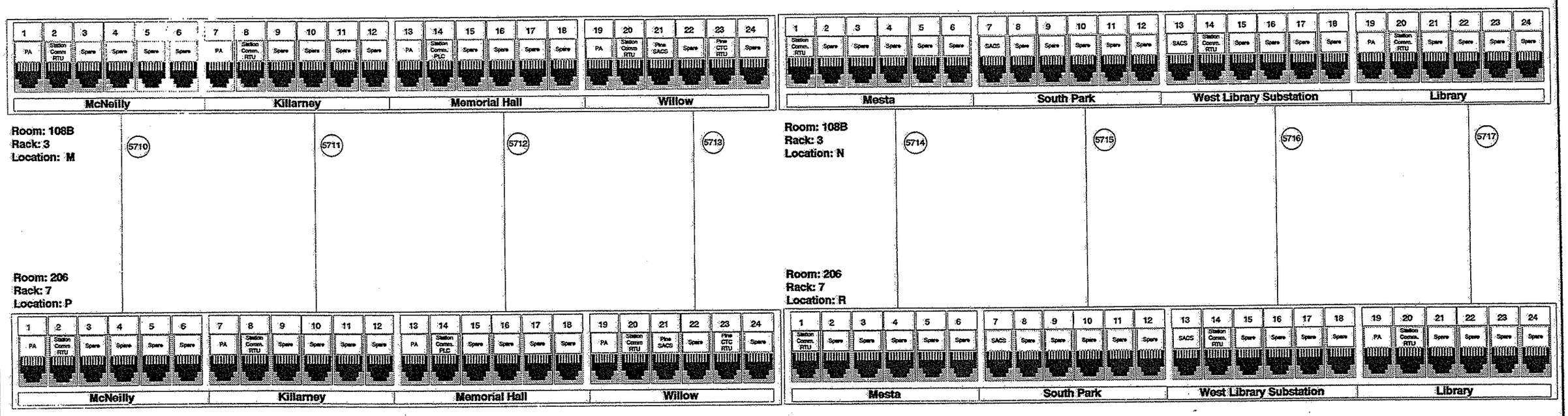

NO.	DATE	DESCRIPTION
1.02	12/16/02	Remove Pine TWC

THIS DOCUMENT AND ITS CONTENTS HAVE BEEN PREPARED BY UNION SWITCH & SIGNAL INC. OWNERSHIP AND OTHER RIGHTS WITH RESPECT TO THE DOCUMENT ARE DETERMINED BY THE APPLICABLE PROVISIONS OF PORT AUTHORITY OF ALLEGHENY COUNTY CONTRACT NO. LRS-98-05-R (HEREAFTER THE CONTRACT). THIS DOCUMENT HAS BEEN FURNISHED TO YOU ON THE FOLLOWING CONDITION. OTHER THAN WHAT IS SPECIFICALLY PROVIDED FOR IN THE CONTRACT, NO RIGHT OR LICENSE IN RESPECT TO THIS DOCUMENT OR ITS CONTENTS IS GIVEN OR WAIVED IN SUPPLYING THE DOCUMENT TO YOU. THIS DOCUMENT OR ITS CONTENTS ARE NOT TO BE USED OR TREATED IN ANY MANNER INCONSISTENT WITH THE RIGHTS OR INTERESTS OF UNION SWITCH & SIGNAL INC.

WARNING

PRIOR TO PLACING THE CIRCUIT SET FORTH ON THIS DRAWING INTO REVENUE SERVICE, THE CIRCUIT AND THE COMPLETE SYSTEM OF WHICH THIS CIRCUIT IS A PART MUST BE TESTED AS FOLLOWS:
(1) CIRCUIT SELECTION BREAKDOWN TEST
(2) SERVICE OPERATION TEST

UNION SWITCH & SIGNAL INC.
PITTSBURGH, PA 15219

DESIGNED	HCB	08/29/02 DATE
DRAWN	HCB	08/29/02 DATE
CHECKED	RGF	08/29/02 DATE
APPROVED BY	FLS	12/12/02 DATE

PORT AUTHORITY OF ALLEGHENY COUNTY
STAGE II LIGHT RAIL TRANSIT SYSTEM

IDF 1st Floor to 2nd Floor Wiring (6 of 8)

CONTRACT NO.	DRAWING NO.	SHEET NO.	LATEST REVISION
LRS-98-05	CC326	326	1.02

PORT AUTHORITY OF ALLEGHENY COUNTY

$$$$INSERT$$$$DESIGN$$$$FILE$$$$NAME$$$$01234567890 INSERT TITLE/DATE

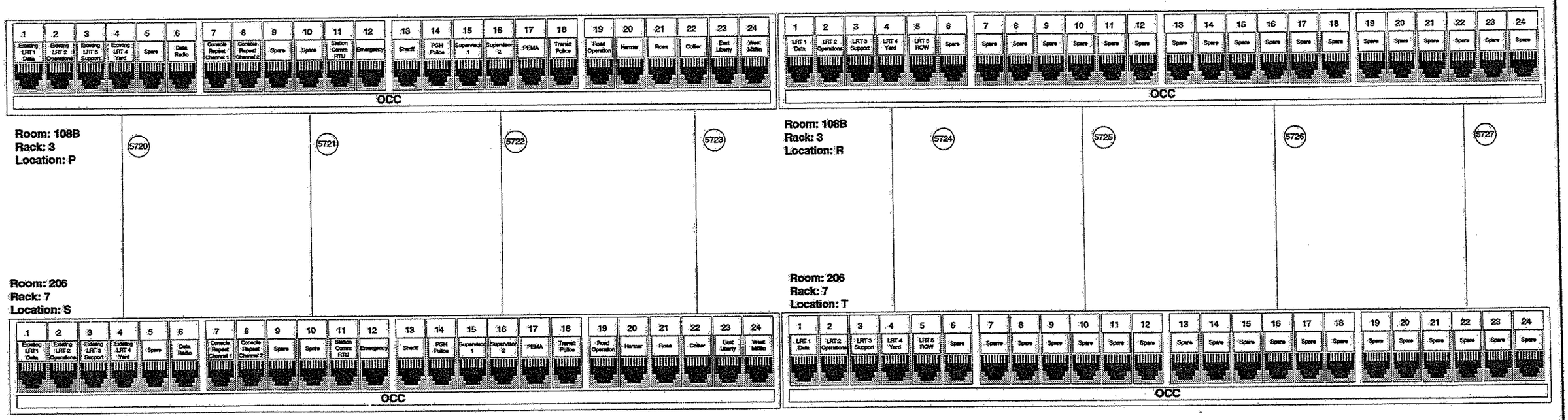

NO.	DATE	DESCRIPTION
1.02	12/16/02	Delete BTO and Dispatcher Intercomm

THIS DOCUMENT AND ITS CONTENTS HAVE BEEN PREPARED BY UNION SWITCH & SIGNAL INC. OWNERSHIP AND OTHER RIGHTS WITH RESPECT TO THE DOCUMENT ARE DETERMINED BY THE APPLICABLE PROVISIONS OF PORT AUTHORITY OF ALLEGHENY COUNTY CONTRACT NO. LRS-98-05-R (HEREAFTER "THE CONTRACT"). THIS DOCUMENT HAS BEEN FURNISHED TO YOU ON THE FOLLOWING CONDITION: OTHER THAN WHAT IS SPECIFICALLY PROVIDED FOR IN THE CONTRACT, NO RIGHT OR LICENSE IN RESPECT TO THIS DOCUMENT OR ITS CONTENTS IS GIVEN OR WAIVED IN SUPPLYING THE DOCUMENT TO YOU. THIS DOCUMENT OR ITS CONTENTS ARE NOT TO BE USED OR TREATED IN ANY MANNER INCONSISTENT WITH THE RIGHTS OR INTERESTS OF UNION SWITCH & SIGNAL INC.
WARNING
PRIOR TO PLACING THE CIRCUIT SET FORTH ON THIS DRAWING INTO REVENUE SERVICE, THE CIRCUIT AND THE COMPLETE SYSTEM OF WHICH THIS CIRCUIT IS A PART MUST BE TESTED AS FOLLOWS: (1) CIRCUIT SELECTION (BREAKDOWN) TEST (2) SERVICE (OPERATION) TEST

UNION SWITCH & SIGNAL INC.
PITTSBURGH, PA 15219

DESIGNED	HCB	08/29/02 DATE
DRAWN	HCB	08/29/02 DATE
CHECKED	RGF	08/29/02 DATE
APPROVED BY	FLS	12/12/02 DATE

PORT AUTHORITY OF ALLEGHENY COUNTY
STAGE II LIGHT RAIL TRANSIT SYSTEM

IDF 1st Floor to 2nd Floor Wiring (7 of 8)

CONTRACT NO.	DRAWING NO.	SHEET NO.	LATEST REVISION
LRS-98-05	CC327	327	1.02

PORT AUTHORITY OF ALLEGHENY COUNTY

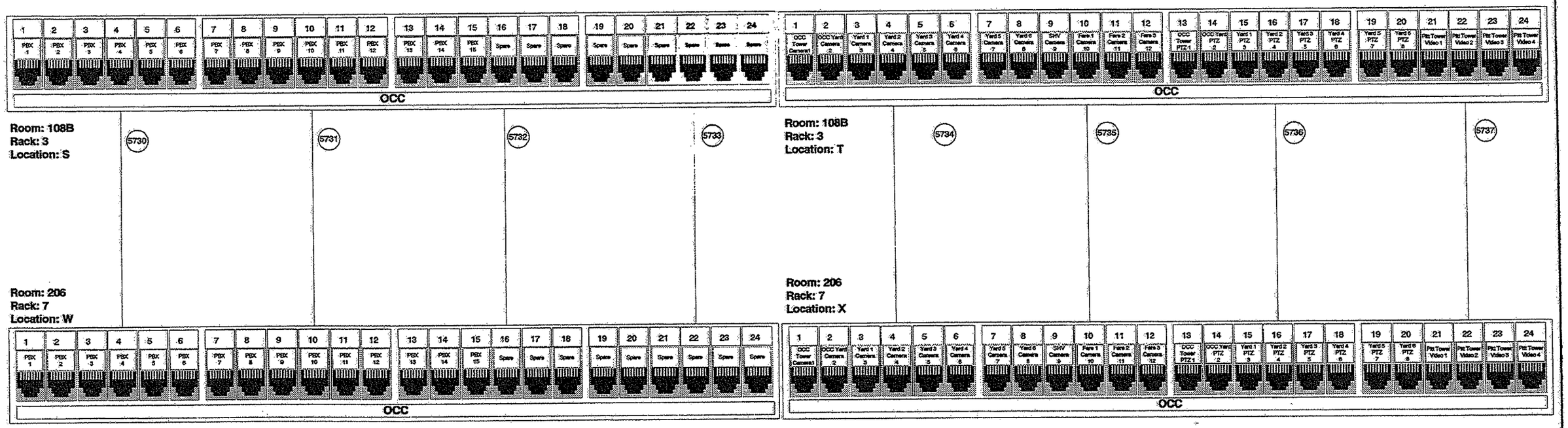

NO.	DATE	DESCRIPTION
1.02	12/16/02	Remove Pitt Tower Slowscan

THIS DOCUMENT AND ITS CONTENTS HAVE BEEN PREPARED BY UNION SWITCH & SIGNAL INC. OWNERSHIP AND OTHER RIGHTS WITH RESPECT TO THE DOCUMENT ARE DETERMINED BY THE APPLICABLE PROVISIONS OF PORT AUTHORITY OF ALLEGHENY COUNTY CONTRACT NO. LRS-98-05-R (HEREAFTER "THE CONTRACT"). THIS DOCUMENT WAS SUCH FURNISHED TO YOU ON THE FOLLOWING CONDITION: EXCEPT THAT WHAT IS SPECIFICALLY PROVIDED FOR IN THE CONTRACT, NO RIGHT OR LICENCE IN RESPECT TO THIS DOCUMENT OR ITS CONTENTS IS GIVEN OR WAIVED IN SUPPLYING THE DOCUMENT TO YOU. THIS DOCUMENT OR ITS CONTENTS ARE NOT TO BE USED OR TREATED IN ANY MANNER INCONSISTENT WITH THE RIGHTS OR INTERESTS OF UNION SWITCH & SIGNAL INC.

WARNING

PRIOR TO PLACING THE CIRCUIT SET FORTH ON THIS DRAWING INTO REVENUE SERVICE, THE CIRCUIT AND THE COMPLETE SYSTEM OF WHICH THIS CIRCUIT IS A PART MUST BE TESTED AS FOLLOWS: (1) CIRCUIT SELECTION (BREAKDOWN) TEST (2) SERVICE (OPERATION) TEST

UNION SWITCH & SIGNAL INC.
PITTSBURGH, PA 15219

		DATE
DESIGNED	HCB	08/29/02
DRAWN	HCB	08/29/02
CHECKED	RGF	08/29/02
APPROVED BY	FLS	12/12/02

PORT AUTHORITY OF ALLEGHENY COUNTY
STAGE II LIGHT RAIL TRANSIT SYSTEM

IDF 1st Floor to 2nd Floor Wiring (8 of 8)

CONTRACT NO.	DRAWING NO.	SHEET NO.	LATEST REVISION
LRS-98-05	CC328	328	1.02

PORT AUTHORITY OF ALLEGHENY COUNTY

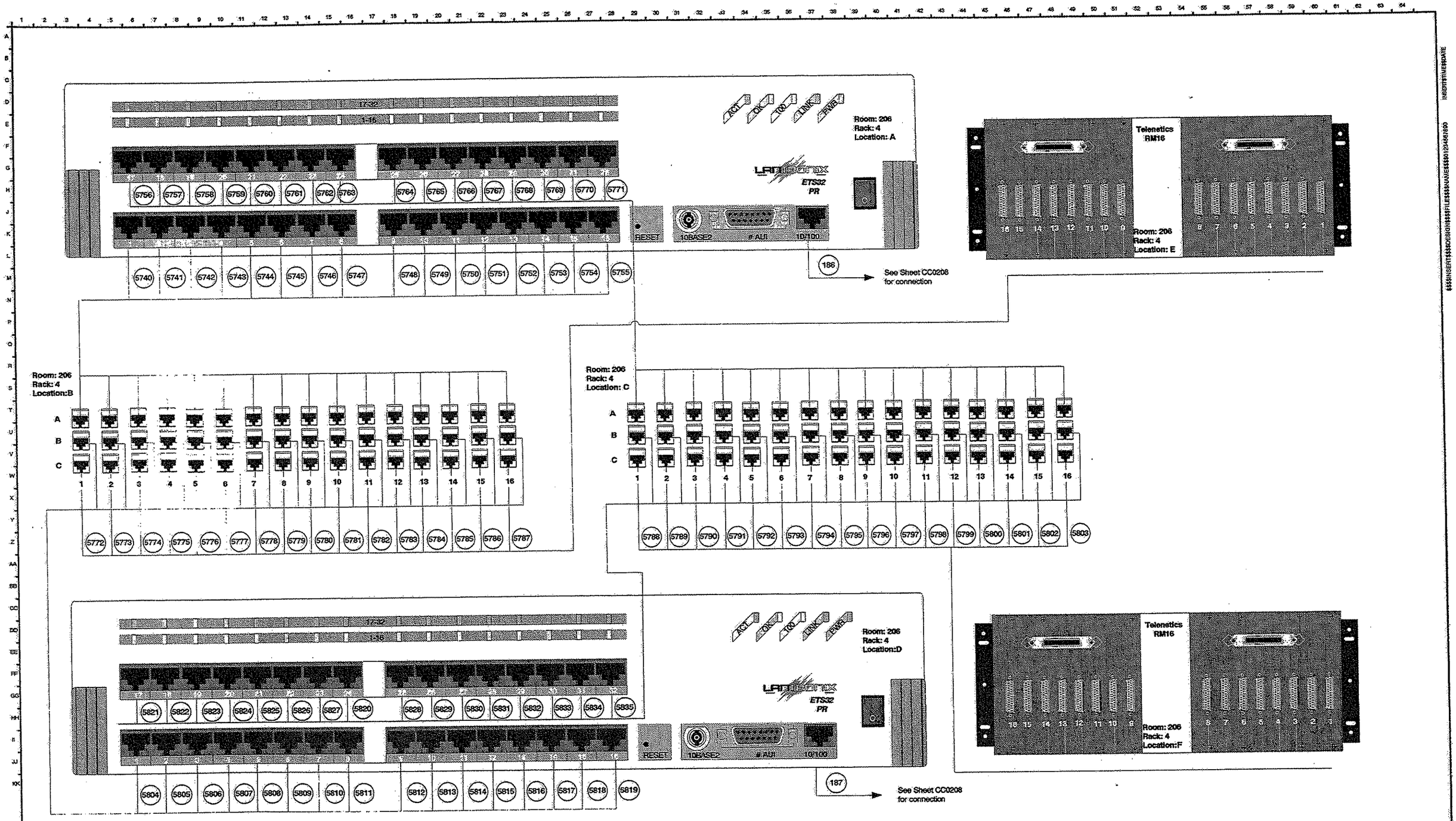

NO.	DATE	DESCRIPTION

THIS DOCUMENT AND ITS CONTENTS HAVE BEEN PREPARED BY UNION SWITCH & SIGNAL INC. OWNERSHIP AND OTHER RIGHTS WITH RESPECT TO THE DOCUMENT ARE DETERMINED BY THE APPLICABLE PROVISIONS OF PORT AUTHORITY OF ALLEGHENY COUNTY CONTRACT NO. LRS-98-05-R (HEREAFTER "THE CONTRACT"). THIS DOCUMENT HAS BEEN FURNISHED TO YOU ON THE FOLLOWING CONDITION: OTHER THAN WHAT IS SPECIFICALLY PROVIDED FOR IN THE CONTRACT, NO RIGHT OR LICENSE IN RESPECT TO THIS DOCUMENT OR ITS CONTENTS IS GIVEN OR WAIVED IN SUPPLYING THE DOCUMENT TO YOU. THIS DOCUMENT OR ITS CONTENTS ARE NOT TO BE USED OR TREATED IN ANY MANNER INCONSISTENT WITH THE RIGHTS OR INTERESTS OF UNION SWITCH & SIGNAL INC.

WARNING

PRIOR TO PLACING THE CIRCUIT SET FORTH ON THIS DRAWING INTO REVENUE SERVICE, THE CIRCUIT AND THE COMPLETE SYSTEM OF WHICH THIS CIRCUIT IS A PART MUST BE TESTED AS FOLLOWS:
(1) CIRCUIT SELECTION (BREAKDOWN) TEST
(2) SERVICE (OPERATION) TEST

UNION SWITCH
& SIGNAL INC.
PITTSBURGH, PA 15219

DESIGNED	HCB	08/29/02 DATE
DRAWN	HCB	08/29/02 DATE
CHECKED	RGF	08/29/02 DATE
APPROVED BY	FLS	12/12/02 DATE

PORT AUTHORITY OF ALLEGHENY COUNTY
STAGE II LIGHT RAIL TRANSIT SYSTEM

Terminal Server Wiring (1 of 4)

CONTRACT NO.	DRAWING NO.	SHEET NO.	LATEST REVISION
LRS-98-05	CC330	330	

PORT AUTHORITY OF ALLEGHENY COUNTY

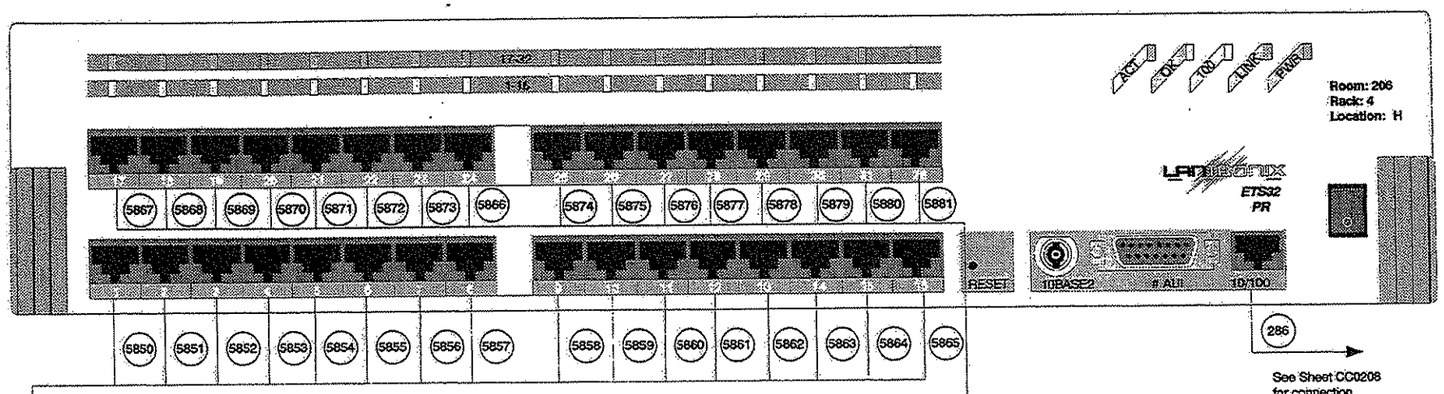

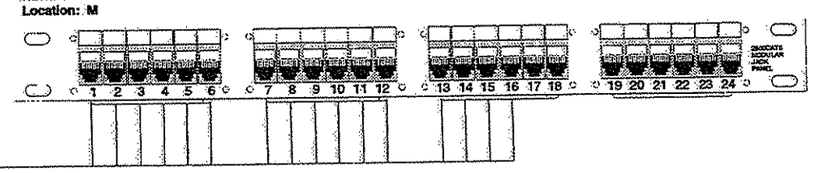

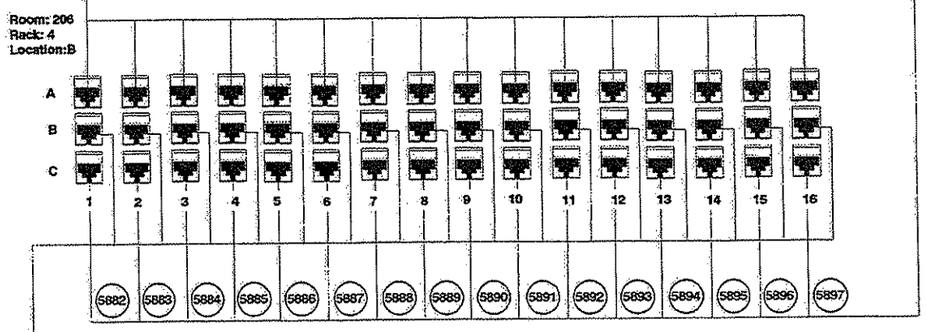

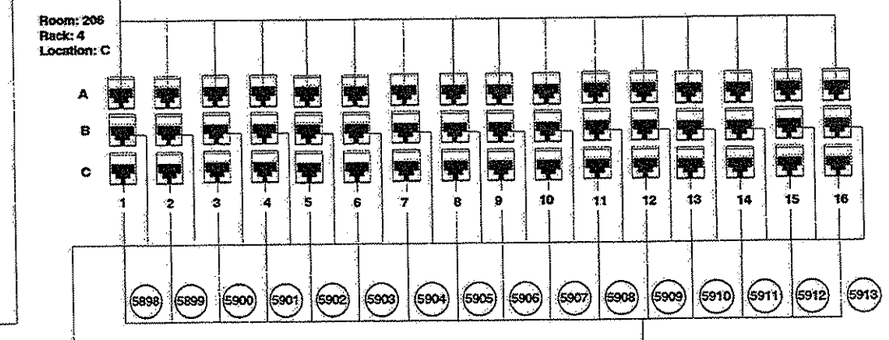

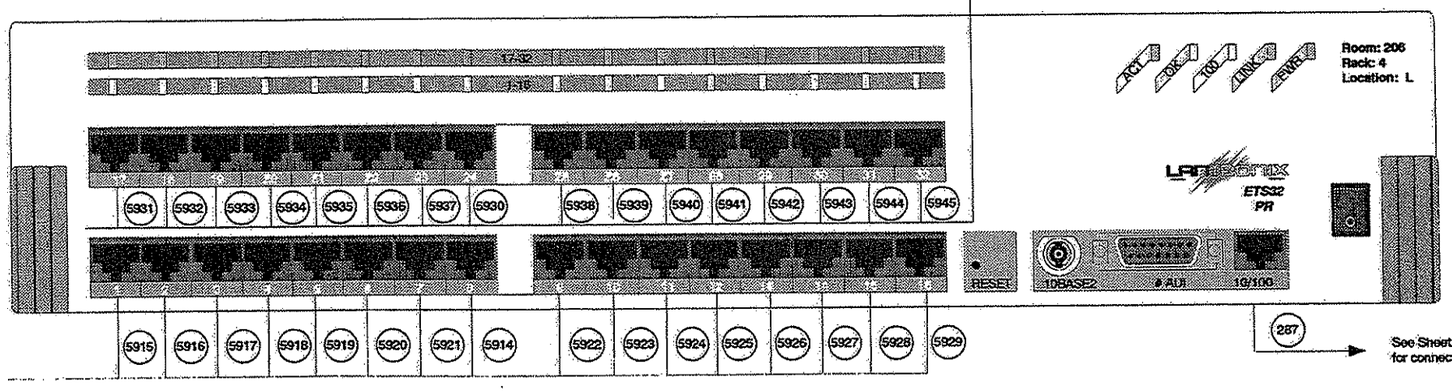

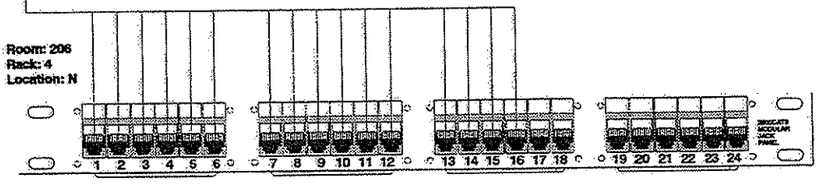

NO.	DATE	DESCRIPTION

THIS DOCUMENT AND ITS CONTENTS HAVE BEEN PREPARED BY UNION SWITCH & SIGNAL INC. OWNERSHIP AND OTHER RIGHTS WITH RESPECT TO THE DOCUMENT ARE DETERMINED BY THE APPLICABLE PROVISIONS OF PORT AUTHORITY OF ALLEGHENY COUNTY CONTRACT NO. LRS-98-05 (HEREINAFTER "THE CONTRACT"). THIS DOCUMENT HAS BEEN FURNISHED TO YOU ON THE FOLLOWING CONDITION: OTHER THAN WHAT IS SPECIFICALLY PROVIDED FOR IN THE CONTRACT, NO RIGHT OR LICENSE IN RESPECT TO THIS DOCUMENT OR ITS CONTENTS IS GIVEN OR WAIVED IN SUPPLYING THE DOCUMENT TO YOU. THIS DOCUMENT OR ITS CONTENTS ARE NOT TO BE USED OR TREATED IN ANY MANNER INCONSISTENT WITH THE RIGHTS OR INTERESTS OF UNION SWITCH & SIGNAL INC.

WARNING

PRIOR TO PLACING THE CIRCUIT SET FORTH ON THIS DRAWING INTO REVENUE SERVICE, THE CIRCUIT AND THE COMPLETE SYSTEM OF WHICH THIS CIRCUIT IS A PART MUST BE TESTED AS FOLLOWS:
(c) CIRCUIT SELECTION (SPEAKDOWN) TEST
(D) SERVICE (OPERATION) TEST

UNION SWITCH
& SIGNAL INC.
PITTSBURGH, PA 15219

DESIGNED	HCB	08/29/02 DATE
DRAWN	HCB	08/29/02 DATE
CHECKED	RGF	08/29/02 DATE
APPROVED BY	FLS	12/12/02 DATE

PORT AUTHORITY OF ALLEGHENY COUNTY
STAGE II LIGHT RAIL TRANSIT SYSTEM

Terminal Server Wiring (2 of 4)

CONTRACT NO.	DRAWING NO.	SHEET NO.	LATEST REVISION
LRS-98-05	CC331	331	

PORT AUTHORITY OF ALLEGHENY COUNTY

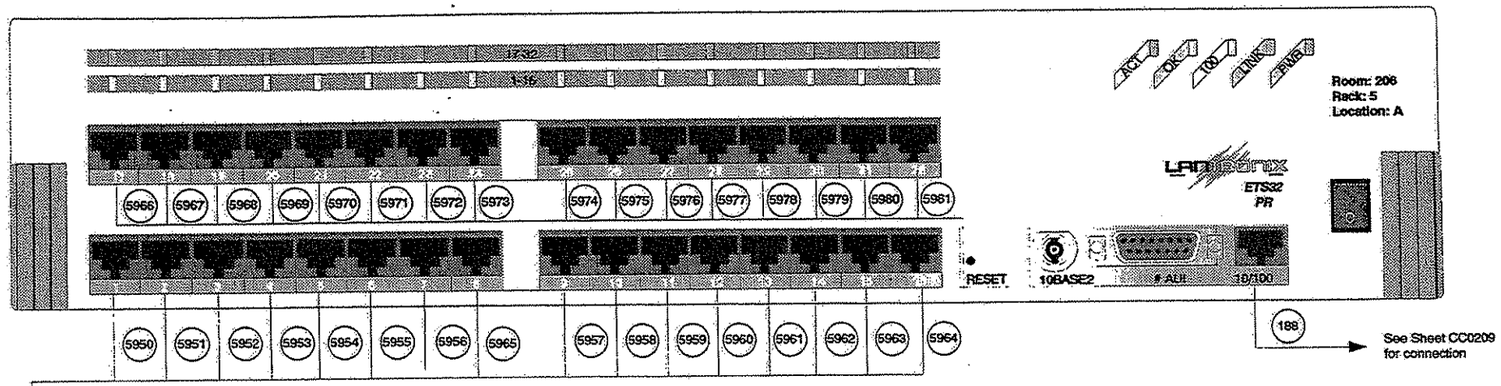

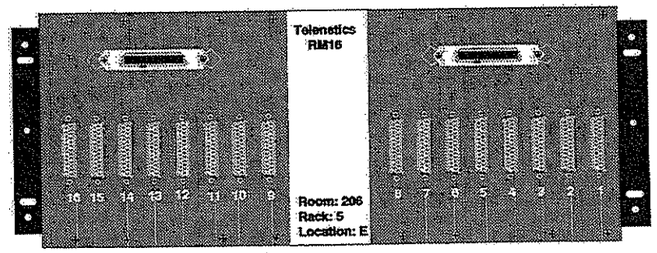

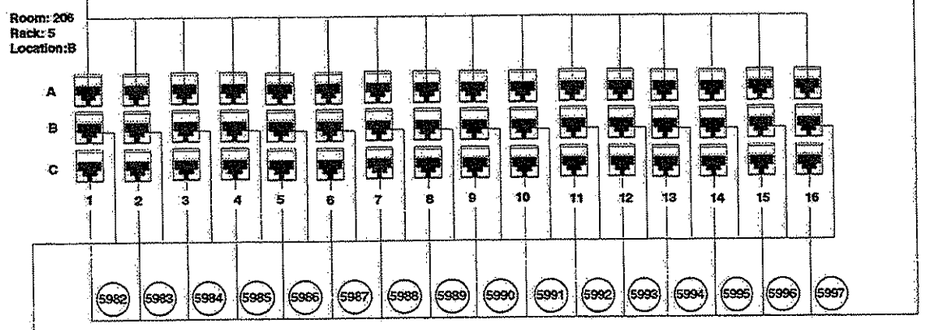

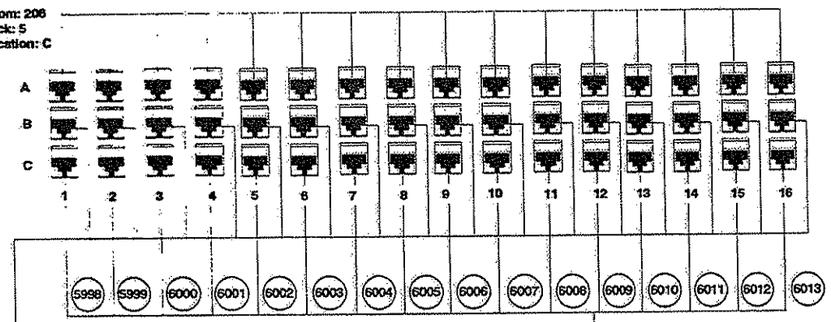

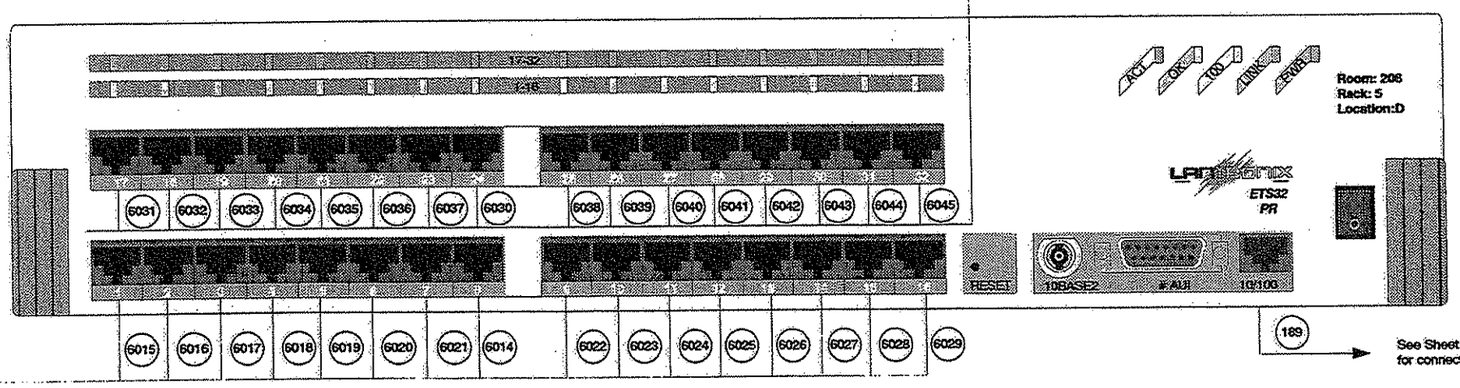

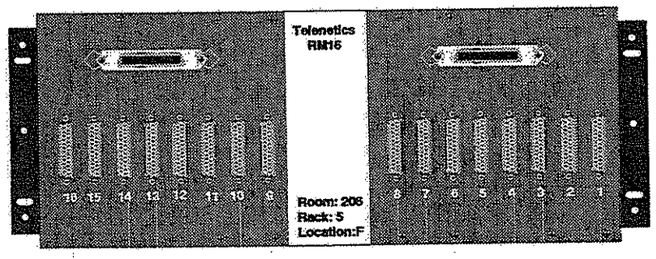

NO.	DATE	DESCRIPTION

THIS DOCUMENT AND ITS CONTENTS HAVE BEEN PREPARED BY UNION SWITCH & SIGNAL INC. OWNERSHIP AND OTHER RIGHTS WITH RESPECT TO THE DOCUMENT ARE DETERMINED BY THE APPLICABLE PROVISIONS OF PORT AUTHORITY OF ALLEGHENY COUNTY CONTRACT NO. LRS-98-05-R (HEREAFTER "THE CONTRACT"). THIS DOCUMENT HAS BEEN FURNISHED TO YOU ON THE FOLLOWING CONDITION: OTHER THAN WHAT IS SPECIFICALLY PROVIDED FOR IN THE CONTRACT, NO RIGHT OR LICENSE IN RESPECT TO THIS DOCUMENT OR ITS CONTENTS IS GRANTED OR WAIVED IN SUPPLYING THE DOCUMENT TO YOU. THIS DOCUMENT OR ITS CONTENTS ARE NOT TO BE USED OR TREATED IN ANY MANNER INCONSISTENT WITH THE RIGHTS OR INTERESTS OF UNION SWITCH & SIGNAL INC.
WARNING
PRIOR TO PLACING THE CIRCUIT SET FORTH ON THIS DRAWING INTO REVENUE SERVICE, THE CIRCUIT AND THE COMPLETE SYSTEM OF WHICH THIS CIRCUIT IS A PART MUST BE TESTED AS FOLLOWS:
(A) CIRCUIT SELECTION BREAKDOWN TEST
(B) SERVICE OPERATING TEST

UNION SWITCH
& SIGNAL INC.
PITTSBURGH, PA 15219

DESIGNED	HCB	08/29/02 DATE
DRAWN	HCB	08/29/02 DATE
CHECKED	RGF	08/29/02 DATE
APPROVED BY	FLS	12/12/02 DATE

PORT AUTHORITY OF ALLEGHENY COUNTY
STAGE II LIGHT RAIL TRANSIT SYSTEM

Terminal Server Wiring (3 of 4)

CONTRACT NO.	DRAWING NO.	SHEET NO.	LATEST REVISION
LRS-98-05	CC332	332	

PORT AUTHORITY OF ALLEGHENY COUNTY

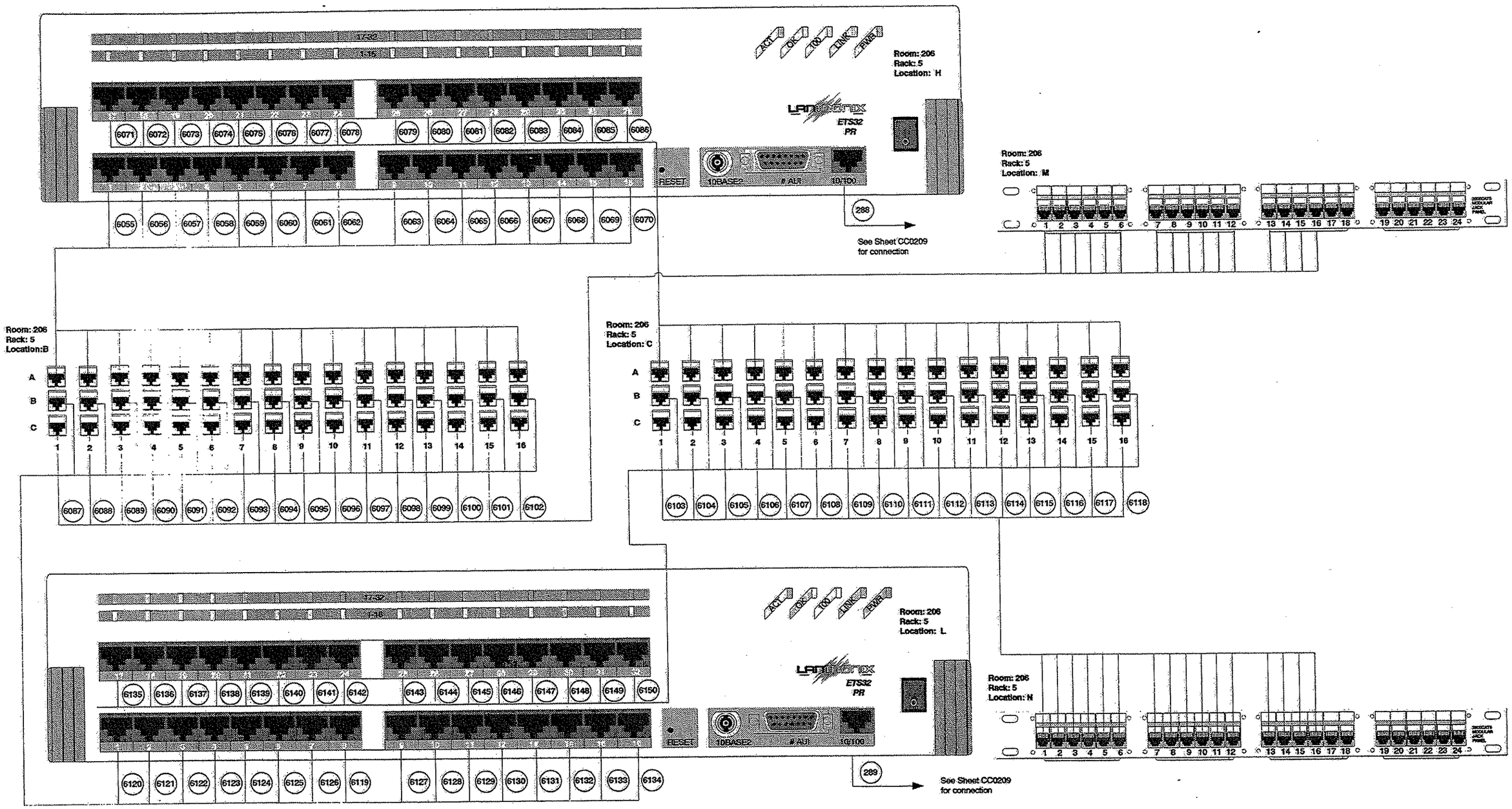

NO.	DATE	DESCRIPTION

THIS DOCUMENT AND ITS CONTENTS HAVE BEEN PREPARED BY UNION SWITCH & SIGNAL INC. OWNERSHIP AND OTHER RIGHTS WITH RESPECT TO THE DOCUMENT ARE DETERMINED BY THE APPLICABLE PROVISIONS OF PORT AUTHORITY OF ALLEGHENY COUNTY CONTRACT NO. LRS-98-05-R (HEREAFTER "THE CONTRACT"). THIS DOCUMENT HAS BEEN FURNISHED TO YOU ON THE FOLLOWING CONDITION: OTHER THAN WHAT IS SPECIFICALLY PROVIDED FOR IN THE CONTRACT, NO RIGHT OR LICENSE IN RESPECT TO THIS DOCUMENT OR ITS CONTENTS IS GIVEN OR WAIVED IN SUPPLYING THE DOCUMENT TO YOU. THIS DOCUMENT OR ITS CONTENTS ARE NOT TO BE USED OR TREATED IN ANY MANNER INCONSISTENT WITH THE RIGHTS OR INTERESTS OF UNION SWITCH & SIGNAL INC.

WARNING

PRIOR TO PLACING THE CIRCUIT SET FORTH ON THIS DRAWING INTO REVENUE SERVICE, THE CIRCUIT AND THE COMPLETE SYSTEM OF WHICH THIS CIRCUIT IS A PART MUST BE TESTED AS FOLLOWS:
(A) CIRCUIT SELECTION (BREAKDOWN) TEST
(B) SERVICE (OPERATION) TEST

UNION SWITCH & SIGNAL INC.
PITTSBURGH, PA 15219

DESIGNED	HCB	08/29/02 DATE
DRAWN	HCB	08/29/02 DATE
CHECKED	RGF	08/29/02 DATE
APPROVED BY	FLS	12/12/02 DATE

PORT AUTHORITY OF ALLEGHENY COUNTY
STAGE II LIGHT RAIL TRANSIT SYSTEM

Terminal Server Wiring (4 of 4)

CONTRACT NO.	DRAWING NO.	SHEET NO.	LATEST REVISION
LRS-98-05	CC333	333	

PORT AUTHORITY OF ALLEGHENY COUNTY

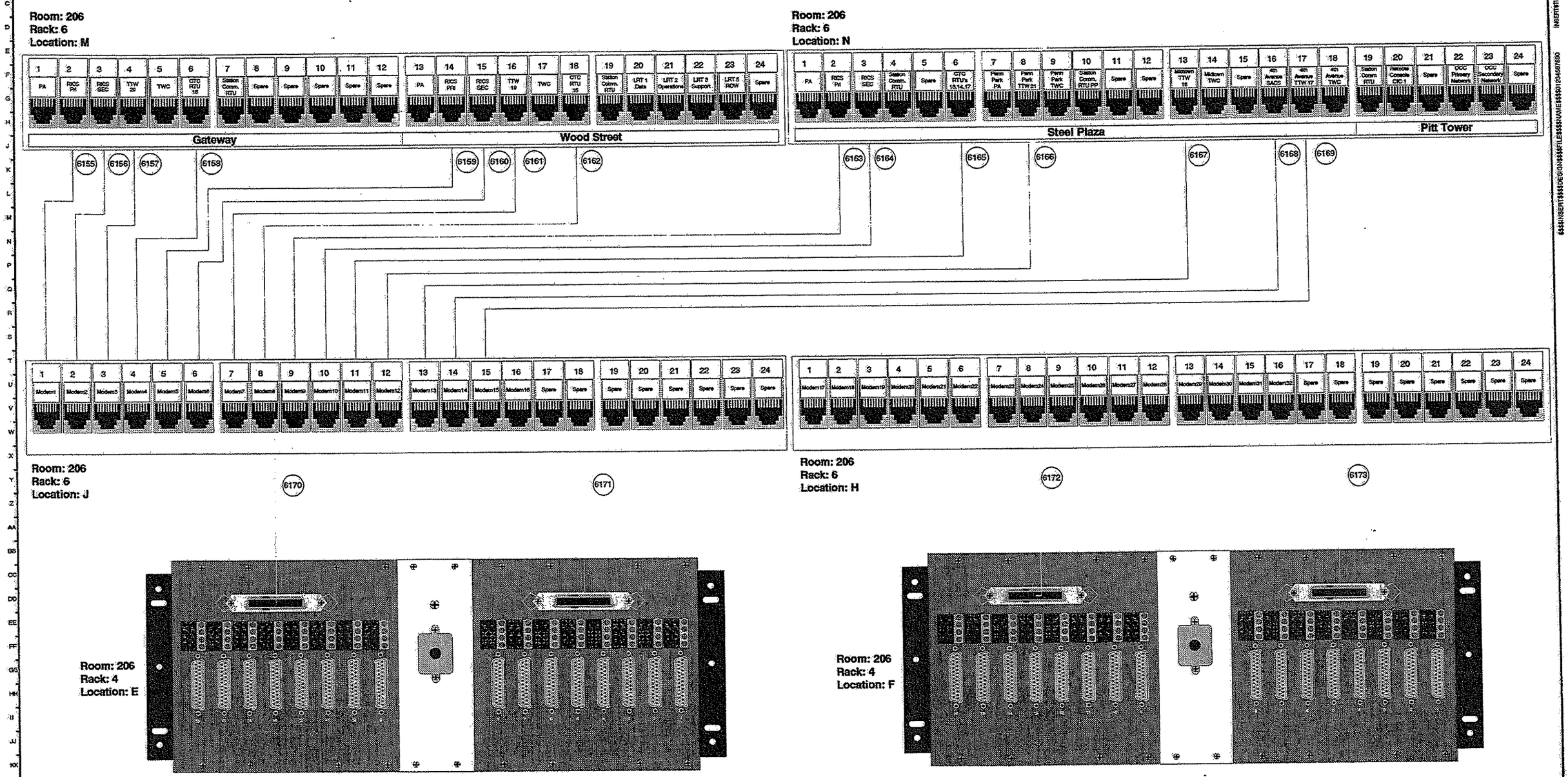

NO.	DATE	DESCRIPTION
1.02	12/16/02	Changed Remote CIC

THIS DOCUMENT AND ITS CONTENTS HAVE BEEN PREPARED BY UNION SWITCH & SIGNAL INC. OWNERSHIP AND OTHER RIGHTS WITH RESPECT TO THE DOCUMENT ARE DETERMINED BY THE APPLICABLE PROVISIONS OF PORT AUTHORITY OF ALLEGHENY COUNTY CONTRACT NO. LRS-98-05 R (HEREAFTER "THE CONTRACT"). THIS DOCUMENT HAS BEEN FURNISHED TO YOU ON THE FOLLOWING CONDITION: OTHER THAN WHAT IS SPECIFICALLY PROVIDED FOR IN THE CONTRACT, NO RIGHT OR LICENSE IN RESPECT TO THIS DOCUMENT OR ITS CONTENTS IS GIVEN OR WAIVED IN SUPPLYING THE DOCUMENT TO YOU. THIS DOCUMENT OR ITS CONTENTS ARE NOT TO BE USED OR TREATED IN ANY MANNER INCONSISTENT WITH THE RIGHTS OR INTERESTS OF UNION SWITCH & SIGNAL INC.

WARNING

PRIOR TO PLACING THE CIRCUIT SET FORTH ON THIS DRAWING INTO REVENUE SERVICE, THE CIRCUIT AND THE COMPLETE SYSTEM OF WHICH THIS CIRCUIT IS A PART MUST BE TESTED AS FOLLOWS:
(1) CIRCUIT SELECTION (BREAKDOWN) TEST
(2) SERVICE (OPERATION) TEST

UNION SWITCH & SIGNAL INC.
PITTSBURGH, PA 15219

DESIGNED	HCB	08/29/02 DATE
DRAWN	HCB	08/29/02 DATE
CHECKED	RGF	08/29/02 DATE
APPROVED BY	FLS	12/12/02 DATE

PORT AUTHORITY OF ALLEGHENY COUNTY
STAGE II LIGHT RAIL TRANSIT SYSTEM

Modem IDF Wiring (1 of 6)

CONTRACT NO.	DRAWING NO.	SHEET NO.	LATEST REVISION
LRS-98-05	CC340	340	1.02

PORT AUTHORITY OF ALLEGHENY COUNTY

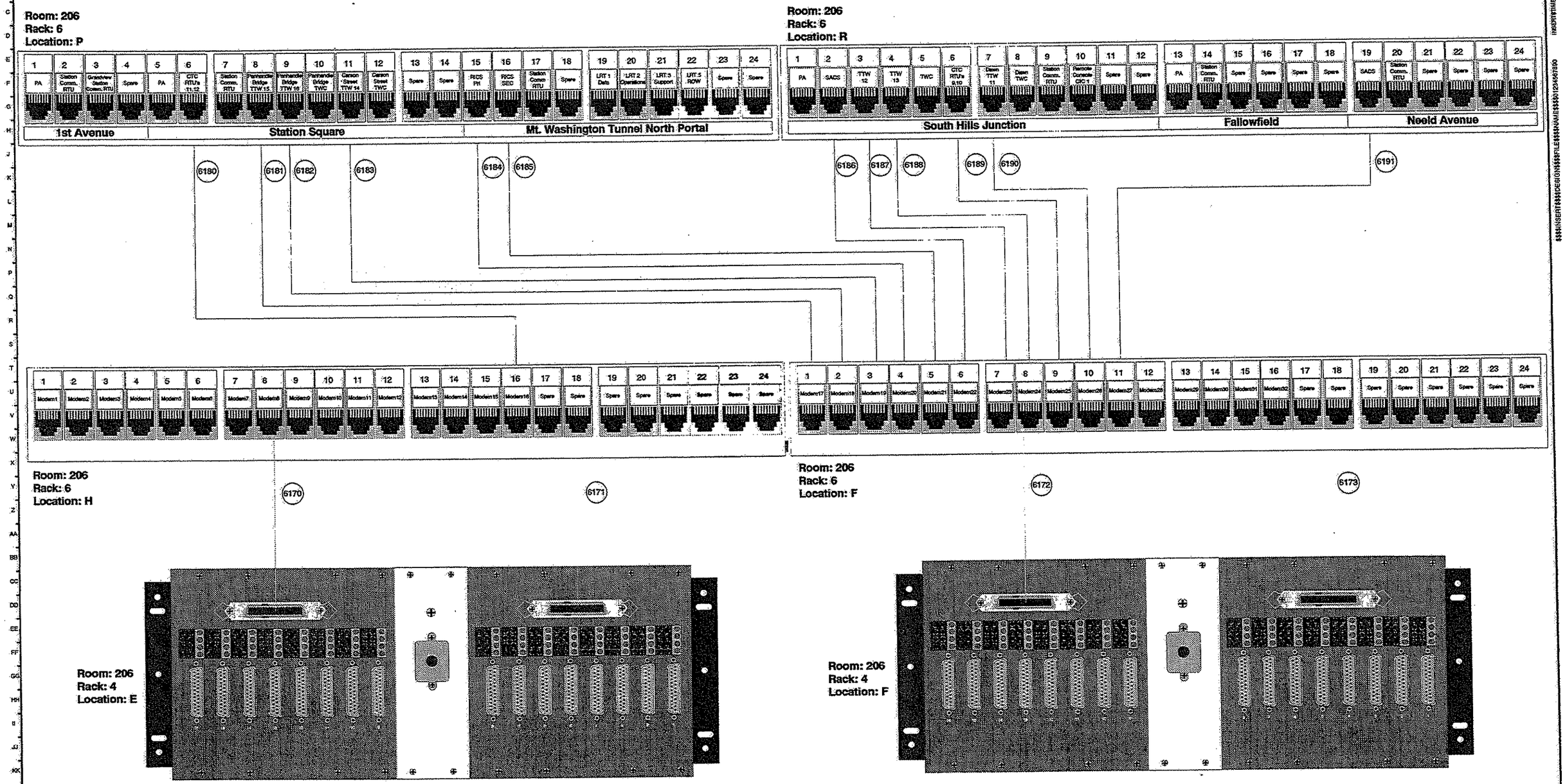

NO.	DATE	DESCRIPTION
1.02	12/16/02	Changed Remote Console

THIS DOCUMENT AND ITS CONTENTS HAVE BEEN PROVIDED BY UNION SWITCH & SIGNAL INC. OWNERSHIP AND OTHER RIGHTS WITH RESPECT TO THE DOCUMENT ARE DETERMINED BY THE APPLICABLE PROVISIONS OF PORT AUTHORITY OF ALLEGHENY COUNTY CONTRACT NO. LRS-98-05 R (HEREAFTER "THE CONTRACT"). THIS DOCUMENT HAS BEEN FURNISHED TO YOU ON THE FOLLOWING CONDITION: OTHER THAN WHAT IS SPECIFICALLY PROVIDED FOR IN THE CONTRACT, NO RIGHT OR LICENSE IN RESPECT TO THIS DOCUMENT OR ITS CONTENTS IS GIVEN OR WAIVED IN SUPPLYING THE DOCUMENT TO YOU. THIS DOCUMENT OR ITS CONTENTS ARE NOT TO BE USED OR REPRODUCED IN ANY MANNER INCONSISTENT WITH THE RIGHTS OR INTERESTS OF UNION SWITCH & SIGNAL INC.

WARNING

PRIOR TO PLACING THE CIRCUIT SET FORTH ON THIS DRAWING INTO REVENUE SERVICE, THE CIRCUIT AND THE COMPLETE SYSTEM OF WHICH THIS CIRCUIT IS A PART MUST BE TESTED AS FOLLOWS:
(1) CIRCUIT SELECTION (BREAKDOWN) TEST
(2) SERVICE EXPERIENCE TEST

UNION SWITCH & SIGNAL INC.
PITTSBURGH, PA 15219

DESIGNED	HCB	08/29/02 DATE
DRAWN	HCB	08/29/02 DATE
CHECKED	RGF	08/29/02 DATE
APPROVED BY	FLS	12/16/02 DATE

PORT AUTHORITY OF ALLEGHENY COUNTY
STAGE II LIGHT RAIL TRANSIT SYSTEM

Modem IDF Wiring (2 of 6)

CONTRACT NO.	DRAWING NO.	SHEET NO.	LATEST REVISION
LRS-98-05	CC341	341	1.02

PORT AUTHORITY OF ALLEGHENY COUNTY

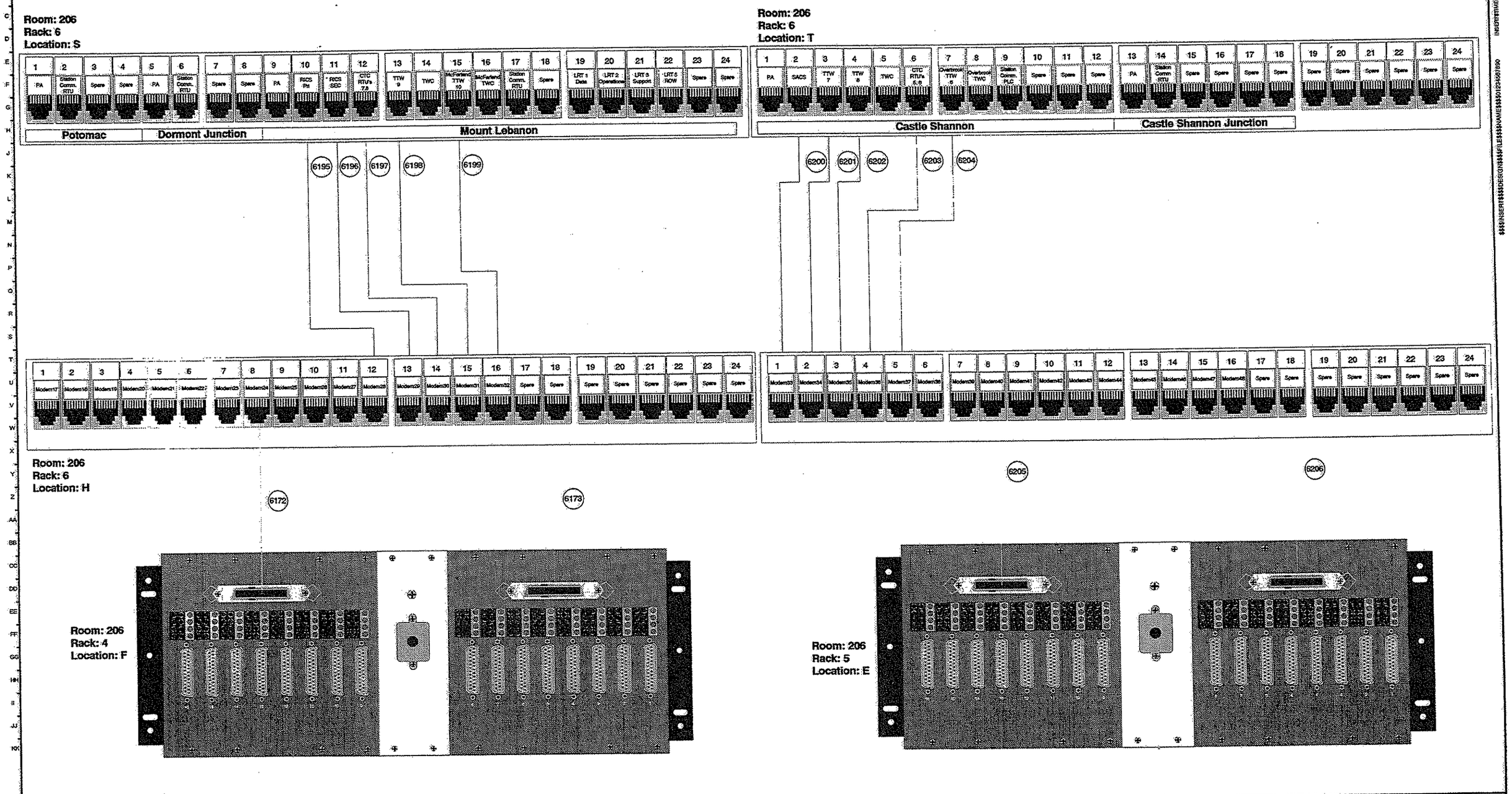

NO.	DATE	DESCRIPTION
1.02	12/16/02	Updated CTC RTU Number

THIS DOCUMENT AND ITS CONTENTS HAVE BEEN PREPARED BY UNION SWITCH & SIGNAL INC. OWNERSHIP AND OTHER RIGHTS WITH RESPECT TO THE DOCUMENT ARE DETERMINED BY THE APPLICABLE PROVISIONS OF PORT AUTHORITY OF ALLEGHENY COUNTY CONTRACT NO. LRS-98-05-R (HEREAFTER "THE CONTRACT"). THIS DOCUMENT HAS BEEN FURNISHED TO YOU ON THE FOLLOWING CONDITION: OTHER THAN WHAT IS SPECIFICALLY PROVIDED FOR IN THE CONTRACT, NO RIGHT OR LICENSE IN RESPECT TO THIS DOCUMENT OR ITS CONTENTS IS GIVEN OR WAIVED IN SUPPLYING THE DOCUMENT TO YOU. THIS DOCUMENT OR ITS CONTENTS ARE NOT TO BE USED OR TREATED IN ANY MANNER INCONSISTENT WITH THE RIGHTS OR INTERESTS OF UNION SWITCH & SIGNAL INC. _____ WARNING _____ PRIOR TO PLACING THE CIRCUIT SET FORTH ON THIS DRAWING INTO REVENUE SERVICE, THE CIRCUIT AND THE COMPLETE SYSTEM OF WHICH THIS CIRCUIT IS A PART MUST BE TESTED AS FOLLOWS: (1) CIRCUIT SELECTION (BREAKDOWN) TEST (2) SERVICE (OPERATION) TEST

UNION SWITCH & SIGNAL INC.
PITTSBURGH, PA 15219

DESIGNED	HCB	08/29/02 DATE
DRAWN	HCB	08/29/02 DATE
CHECKED	RGF	08/29/02 DATE
APPROVED BY	FLS	12/13/02 DATE

PORT AUTHORITY OF ALLEGHENY COUNTY
STAGE II LIGHT RAIL TRANSIT SYSTEM

Modem IDF Wiring (3 of 6)

CONTRACT NO.	DRAWING NO.	SHEET NO.	LATEST REVISION
LRS-98-05	CC342	342	1.02

PORT AUTHORITY OF ALLEGHENY COUNTY

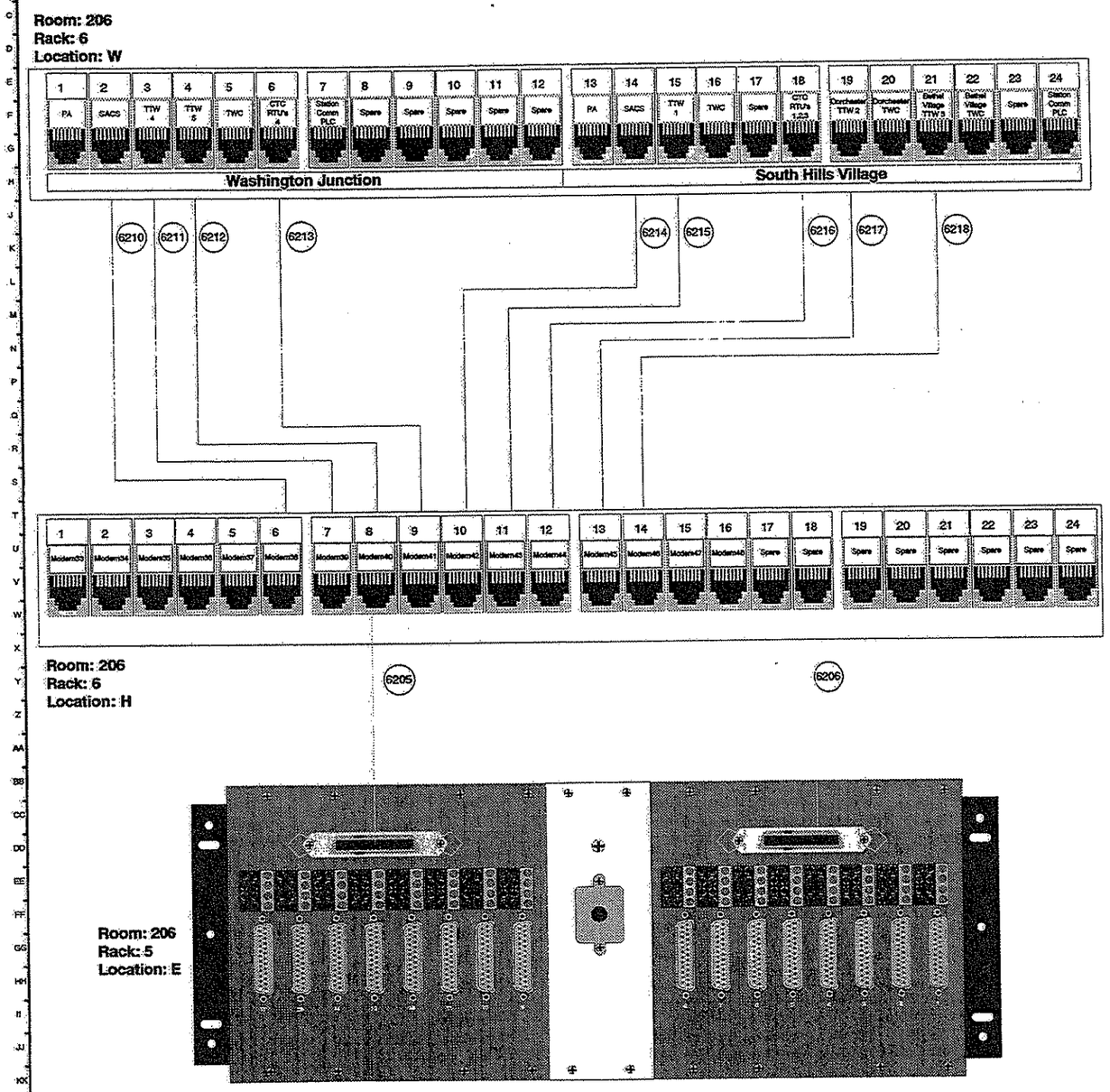

NO.	DATE	DESCRIPTION

THIS DOCUMENT AND ITS CONTENTS HAVE BEEN PREPARED BY UNION SWITCH & SIGNAL INC. OWNERSHIP AND OTHER RIGHTS WITH RESPECT TO THE DOCUMENT ARE DETERMINED BY THE APPLICABLE PROVISIONS OF PORT AUTHORITY OF ALLEGHENY COUNTY CONTRACT NO. LRS-98-05-R (HEREAFTER "THE CONTRACT"). THIS DOCUMENT HAS BEEN FURNISHED TO YOU ON THE FOLLOWING CONDITION: OTHER THAN WHAT IS SPECIFICALLY PROVIDED FOR IN THE CONTRACT, NO RIGHT OR LICENSE IN RESPECT TO THIS DOCUMENT OR ITS CONTENTS IS GIVEN OR INFERRED IN SUPPLYING THE DOCUMENT TO YOU. THIS DOCUMENT OR ITS CONTENTS ARE NOT TO BE USED OR TREATED IN ANY MANNER INCONSISTENT WITH THE RIGHTS OR INTERESTS OF UNION SWITCH & SIGNAL INC.

WARNING

PRIOR TO PLACING THE CIRCUIT SET FORTH ON THIS DRAWING INTO REVENUE SERVICE, THE CIRCUIT AND THE COMPLETE SYSTEM OF WHICH THIS CIRCUIT IS A PART MUST BE TESTED AS FOLLOWS:
(a) CIRCUIT SELECTION (BREAKDOWN) TEST
(b) SERVICE (OPERATIONS) TEST

UNION SWITCH & SIGNAL INC.
PITTSBURGH, PA 15219

DESIGNED	HCB	08/29/02 DATE
DRAWN	HCB	08/29/02 DATE
CHECKED	RGF	08/29/02 DATE
APPROVED BY	FLS	12/16/02 DATE

PORT AUTHORITY OF ALLEGHENY COUNTY
STAGE II LIGHT RAIL TRANSIT SYSTEM

Modem IDF Wiring (4 of 6)

CONTRACT NO.	DRAWING NO.	SHEET NO.	LATEST REVISION
LRS-98-05	CC343	343	

PORT AUTHORITY OF ALLEGHENY COUNTY

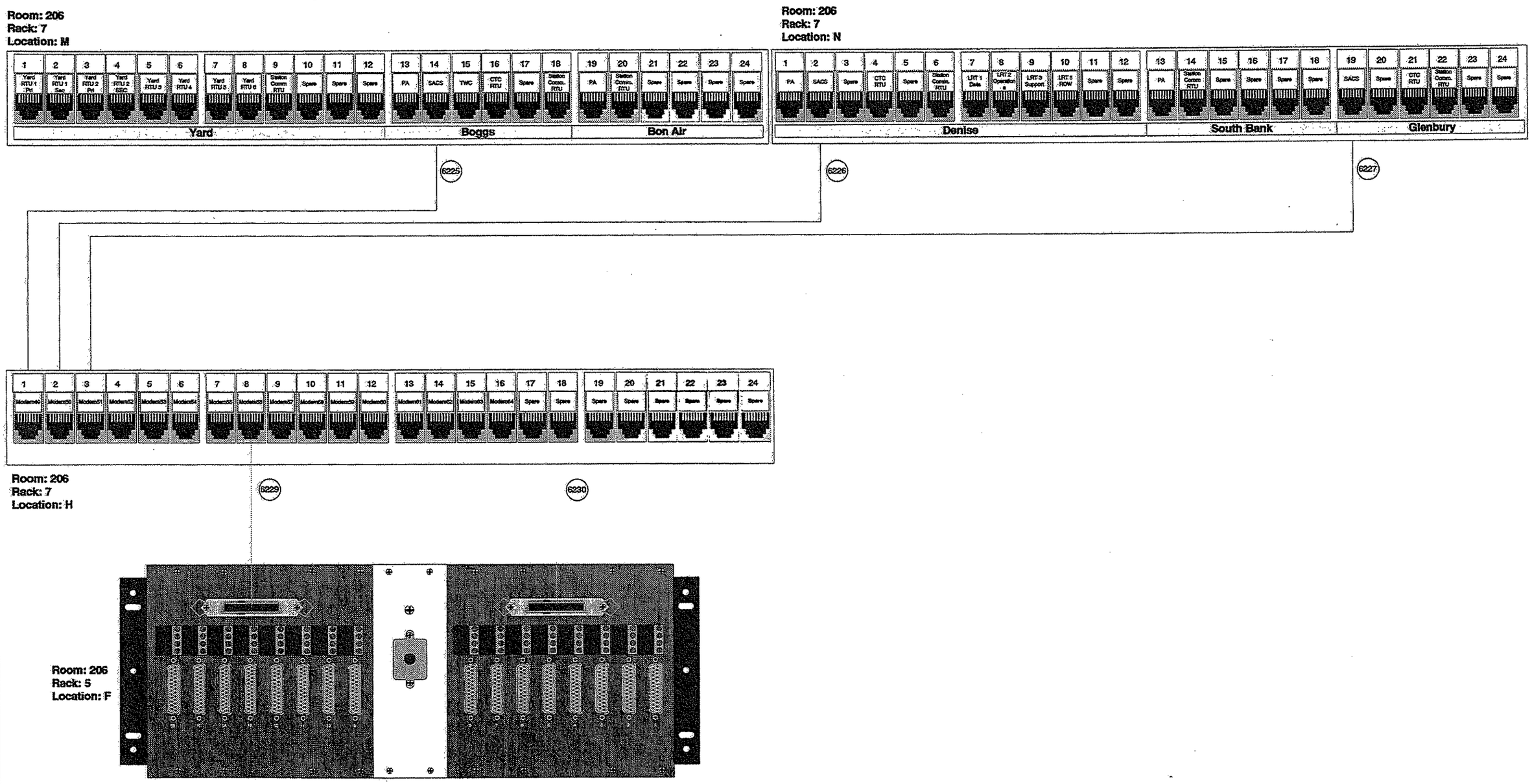

NO.	DATE	DESCRIPTION
1.02	12/17/02	Removed TWC at Denise and Glenbury

THIS DOCUMENT AND ITS CONTENTS HAVE BEEN PREPARED BY UNION SWITCH & SIGNAL INC. OWNERSHIP AND OTHER RIGHTS WITH RESPECT TO THE DOCUMENT ARE DETERMINED BY THE APPLICABLE PROVISIONS OF PORT AUTHORITY OF ALLEGHENY COUNTY CONTRACT NO. LRS-98-05-R (HEREAFTER "THE CONTRACT"). THIS DOCUMENT HAS BEEN FURNISHED TO YOU ON THE FOLLOWING CONDITION: OTHER THAN WHAT IS SPECIFICALLY PROVIDED FOR IN THE CONTRACT, NO RIGHT OR LICENSE IN RESPECT TO THIS DOCUMENT OR ITS CONTENTS IS GRANTED OR IMPLIED TO THE DOCUMENT TO YOU. THIS DOCUMENT OR ITS CONTENTS ARE NOT TO BE USED OR TRADED IN ANY MANNER INCONSISTENT WITH THE RIGHTS OR INTERESTS OF UNION SWITCH & SIGNAL INC.

___WARNING___

PRIOR TO PLACING THE CIRCUIT SET FORTH ON THIS DRAWING INTO REVENUE SERVICE, THE CIRCUIT AND THE COMPLETE SYSTEM OF WHICH THIS CIRCUIT IS A PART MUST BE TESTED AS FOLLOWS: (A) CIRCUIT SELECTION BREAKDOWN TEST (B) SERVICE (OPERATION) TEST

UNION SWITCH & SIGNAL INC.
PITTSBURGH, PA 15219

DESIGNED	HCB	08/29/02 DATE
DRAWN	HCB	08/29/02 DATE
CHECKED	RGF	08/29/02 DATE
APPROVED BY	FLS	12/17/02 DATE

PORT AUTHORITY OF ALLEGHENY COUNTY
STAGE II LIGHT RAIL TRANSIT SYSTEM

Modem IDF Wiring (5 of 6)

CONTRACT NO.	DRAWING NO.	SHEET NO.	LATEST REVISION
LRS-98-05	CC344	344	1.02

PORT AUTHORITY OF ALLEGHENY COUNTY

Room: 206
Rack: 7
Location: P

McNeilly						Killarney						Memorial Hall						Willow					
1	2	3	4	5	6	7	8	9	10	11	12	13	14	15	16	17	18	19	20	21	22	23	24
PA	Station Comm. RTU	Spare	Spare	Spare	Spare	PA	Station Comm. RTU	Spare	Spare	Spare	Spare	PA	Station Comm. PLC	Spare	Spare	Spare	Spare	PA	Station Comm. RTU	Pine SACS	Spare	Pine CTC RTU	Spare

Room: 206
Rack: 7
Location: R

Mesta						South Park						West Library Substation						Library					
1	2	3	4	5	6	7	8	9	10	11	12	13	14	15	16	17	18	19	20	21	22	23	24
Station Comm. RTU	Spare	Spare	Spare	Spare	Spare	SACS	Spare	Spare	Spare	Spare	Spare	SACS	Station Comm. RTU	Spare	Spare	Spare	Spare	PA	Station Comm. RTU	Spare	Spare	Spare	Spare

6235 6236 6237

1	2	3	4	5	6	7	8	9	10	11	12	13	14	15	16	17	18	19	20	21	22	23	24
Modem49	Modem50	Modem51	Modem52	Modem53	Modem54	Modem55	Modem56	Modem57	Modem58	Modem59	Modem60	Modem61	Modem62	Modem63	Modem64	Spare	Spare	Spare	Spare	Spare	Spare	Spare	Spare

Room: 206
Rack: 7
Location: H

6229 6230

Room: 206
Rack: 5
Location: F

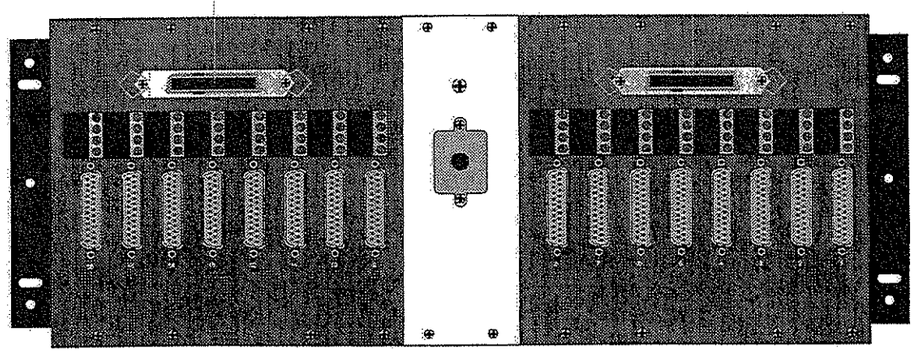

NO.	DATE	DESCRIPTION
1.02	12/17/02	Remove Pine TWC

THIS DOCUMENT AND ITS CONTENTS HAVE BEEN PREPARED BY UNION SWITCH & SIGNAL INC. OWNERSHIP AND OTHER RIGHTS WITH RESPECT TO THE DOCUMENT ARE DETERMINED BY THE APPLICABLE PROVISIONS OF PORT AUTHORITY OF ALLEGHENY COUNTY CONTRACT NO. LRS-98-05-R (HEREINAFTER "THE CONTRACT"). THIS DOCUMENT HAS BEEN FURNISHED TO YOU ON THE FOLLOWING CONDITION: OTHER THAN WHAT IS SPECIFICALLY PROVIDED FOR IN THE CONTRACT, NO RIGHT OR LICENSE IN RESPECT TO THIS DOCUMENT OR ITS CONTENTS IS GIVEN OR WARRANTED IN SUPPLYING THE DOCUMENT TO YOU. THIS DOCUMENT OR ITS CONTENTS ARE NOT TO BE USED OR TRADED IN ANY MANNER INCONSISTENT WITH THE RIGHTS OR INTERESTS OF UNION SWITCH & SIGNAL INC.

WARRANTY

PRIOR TO PLACING THE CIRCUIT SET FORTH ON THIS DRAWING INTO REVENUE SERVICE, THE CIRCUIT AND THE COMPLETE SYSTEM OF WHICH THIS CIRCUIT IS A PART MUST BE TESTED AS FOLLOWS:
(A) CIRCUIT SELECTION BREAKDOWN TEST
(B) SERVICE OPERATION TEST

UNION SWITCH & SIGNAL INC.
PITTSBURGH, PA 15219

DESIGNED	HCB	08/29/02 DATE
DRAWN	HCB	08/29/02 DATE
CHECKED	RGF	08/29/02 DATE
APPROVED BY	FLS	12/16/02 DATE

PORT AUTHORITY OF ALLEGHENY COUNTY
STAGE II LIGHT RAIL TRANSIT SYSTEM

Modem IDF Wiring (6 of 6)

CONTRACT NO.	DRAWING NO.	SHEET NO.	LATEST REVISION
LRS-98-05	CC345	345	1.02

PORT AUTHORITY OF ALLEGHENY COUNTY

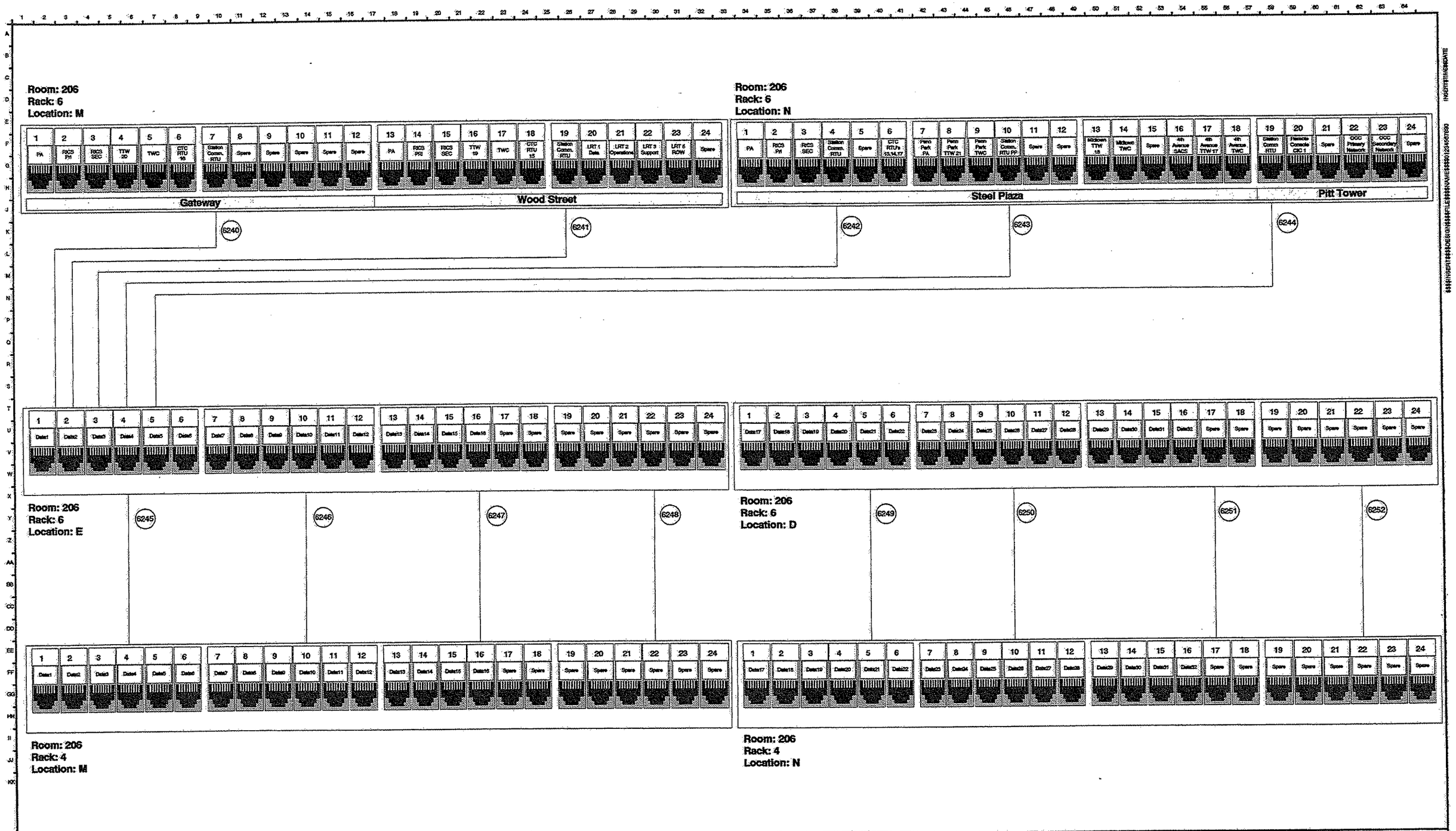

NO.	DATE	DESCRIPTION
1.02	12/17/02	Removed Remote CIC

THIS DOCUMENT AND ITS CONTENTS HAVE BEEN PROVIDED BY UNION SWITCH & SIGNAL INC. OWNERSHIP AND OTHER RIGHTS WITH RESPECT TO THE DOCUMENT ARE DETERMINED BY THE APPLICABLE PROVISIONS OF PORT AUTHORITY OF ALLEGHENY COUNTY CONTRACT NO. LRS-98-05-R (HEREAFTER "THE CONTRACT"). THIS DOCUMENT HAS BEEN PURVEYED TO YOU ON THE FOLLOWING CONDITIONS: OTHER THAN WHAT IS SPECIFICALLY PROVIDED FOR IN THE CONTRACT, NO RIGHT OR LICENSE IN RESPECT TO THIS DOCUMENT OR ITS CONTENTS IS GIVEN OR WAIVED IN SUPPLYING THE DOCUMENT TO YOU. THIS DOCUMENT OR ITS CONTENTS ARE NOT TO BE USED OR TREATED IN ANY MANNER INCONSISTENT WITH THE RIGHTS OR INTERESTS OF UNION SWITCH & SIGNAL INC.

WARNING

PRIOR TO PLACING THE CIRCUIT SET FORTH ON THIS DRAWING INTO REVENUE SERVICE, THE CIRCUIT AND THE COMPLETE SYSTEM OF WHICH THIS CIRCUIT IS A PART MUST BE TESTED AS FOLLOWS:
(1) CIRCUIT SELECTION (BREAKDOWN) TEST
(2) SERVICE (OPERATION) TEST

UNION SWITCH & SIGNAL INC.
PITTSBURGH, PA 15219

DESIGNED	HCB	08/29/02 DATE
DRAWN	HCB	08/29/02 DATE
CHECKED	RGF	08/29/02 DATE
APPROVED BY	FLS	12/16/02 DATE

PORT AUTHORITY OF ALLEGHENY COUNTY
STAGE II LIGHT RAIL TRANSIT SYSTEM

Data IDF Wiring (1 of 7)

CONTRACT NO.	DRAWING NO.	SHEET NO.	LATEST REVISION
LRS-98-05	CC350	350	1.02

PORT AUTHORITY OF ALLEGHENY COUNTY

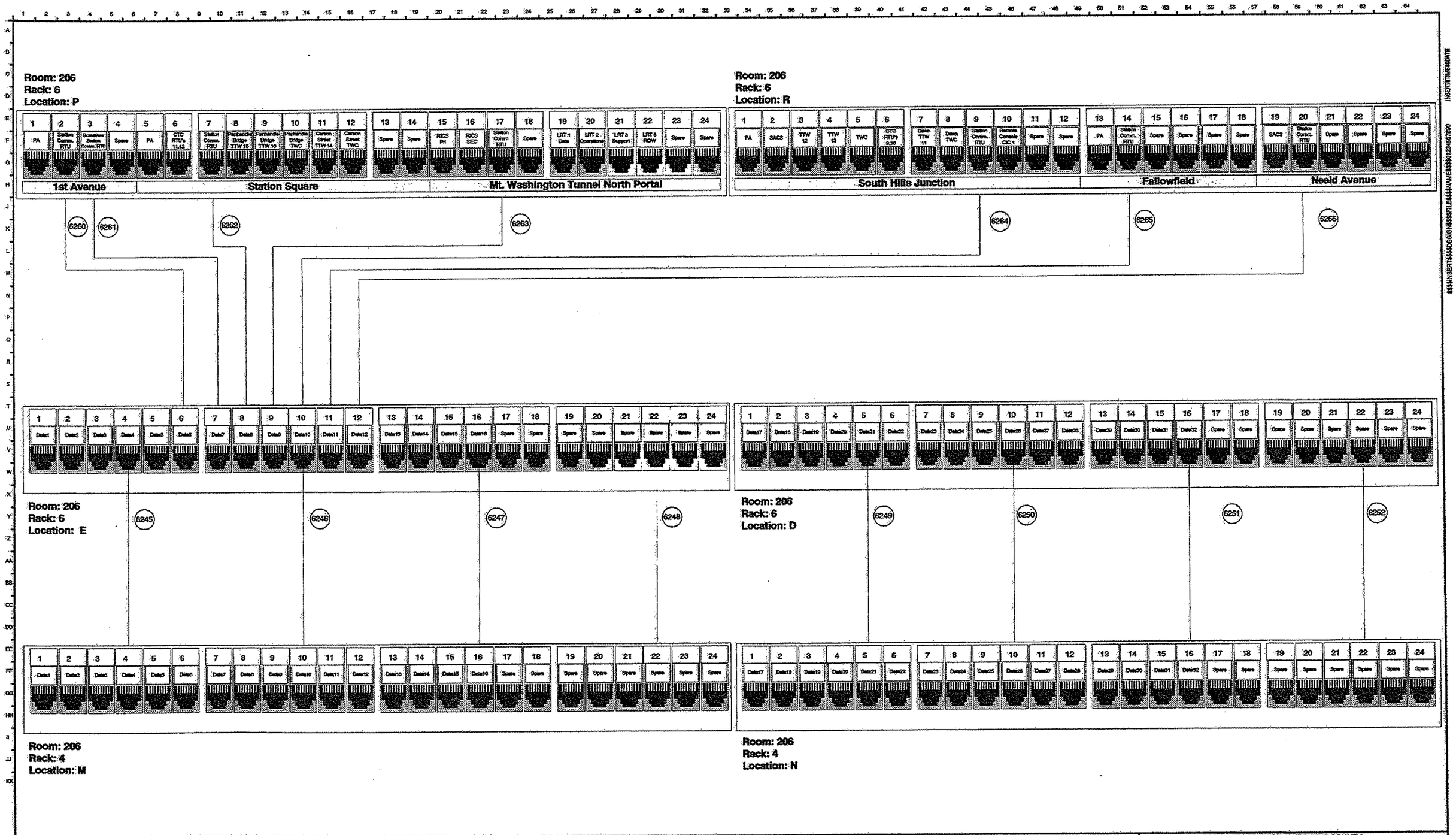

NO.	DATE	DESCRIPTION
1.02	12/17/02	Removed Remote CIC

THIS DOCUMENT AND ITS CONTENTS HAVE BEEN PREPARED BY UNION SWITCH & SIGNAL INC. OWNERSHIP AND OTHER RIGHTS WITH RESPECT TO THE DOCUMENT ARE DETERMINED BY THE APPLICABLE PROVISIONS OF PORT AUTHORITY OF ALLEGHENY COUNTY CONTRACT NO. LRS-98-05 (HEREINAFTER "THE CONTRACT"). THIS DOCUMENT HAS BEEN FURNISHED TO YOU ON THE FOLLOWING CONDITION: OTHER THAN WHAT IS SPECIFICALLY PROVIDED FOR IN THE CONTRACT, NO RIGHT OR LICENSE IN RESPECT TO THIS DOCUMENT OR ITS CONTENTS IS GIVEN OR WAIVED IN SUPPLYING THE DOCUMENT TO YOU. THIS DOCUMENT OR ITS CONTENTS ARE NOT TO BE USED OR TREATED IN ANY MANNER INCONSISTENT WITH THE RIGHTS OR INTERESTS OF UNION SWITCH & SIGNAL INC.

WARNING

PRIOR TO PLACING THE CIRCUIT SET FORTH ON THIS DRAWING INTO REVENUE SERVICE, THE CIRCUIT AND THE COMPLETE SYSTEM OF WHICH THIS CIRCUIT IS A PART MUST BE TESTED AS FOLLOWS:
(1) CIRCUIT SELECTION (BREAKDOWN TEST)
(2) SERVICE (OPERATION) TEST

UNION SWITCH & SIGNAL INC.
PITTSBURGH, PA 15219

DESIGNED	HCB	08/29/02 DATE
DRAWN	HCB	08/29/02 DATE
CHECKED	RGF	08/29/02 DATE
APPROVED BY	FLS	12/16/02 DATE

PORT AUTHORITY OF ALLEGHENY COUNTY
STAGE II LIGHT RAIL TRANSIT SYSTEM

Data IDF Wiring (2 of 7)

CONTRACT NO.	DRAWING NO.	SHEET NO.	LATEST REVISION
LRS-98-05	CC351	351	1.02

PORT AUTHORITY OF ALLEGHENY COUNTY

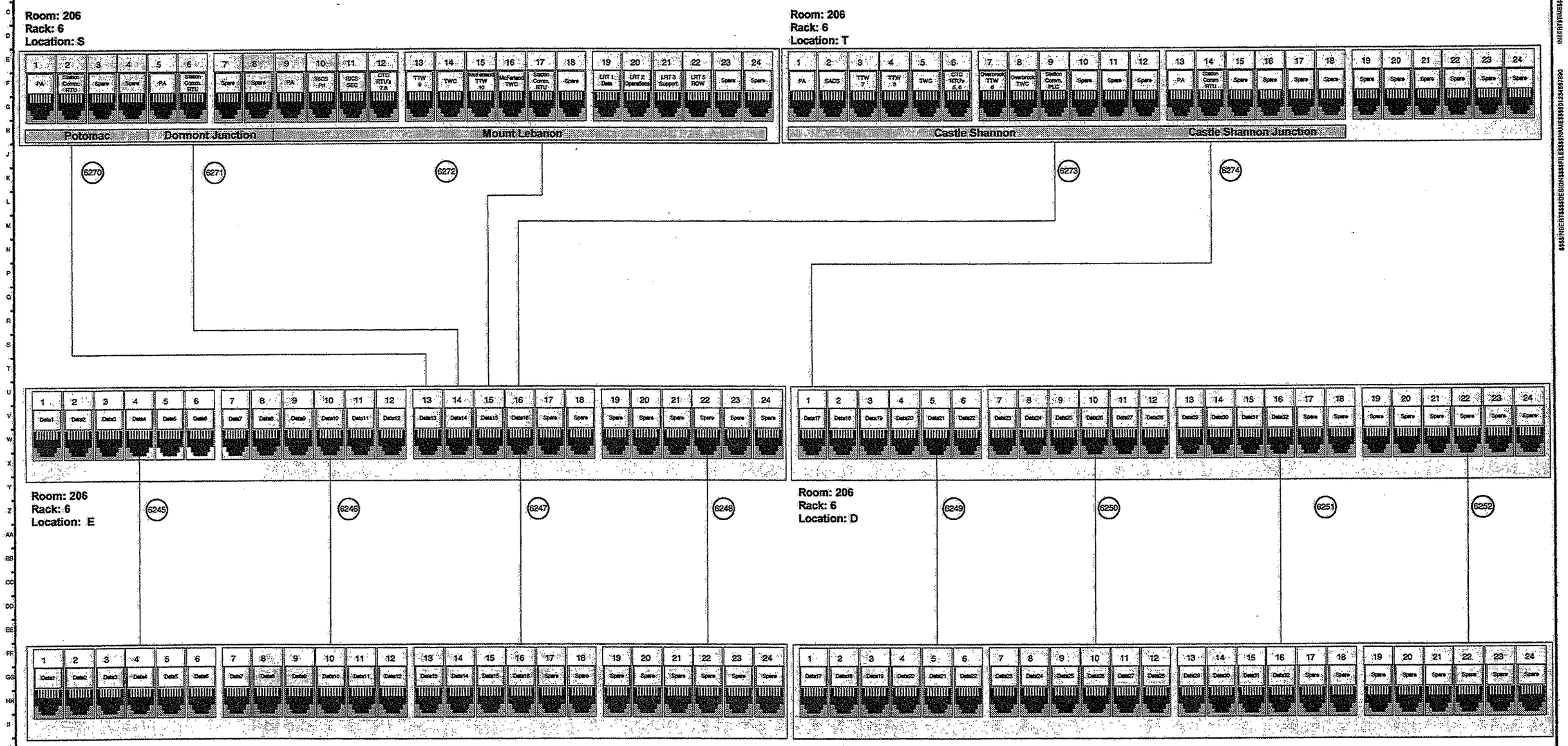

NO.	DATE	DESCRIPTION
1.02	01/06/03	Updated CTC RTU Number

THIS DOCUMENT AND ITS CONTENTS HAVE BEEN PREPARED BY UNION SWITCH & SIGNAL INC. OWNERSHIP AND OTHER RIGHTS WITH RESPECT TO THE DOCUMENT ARE DETERMINED BY THE APPLICABLE PROVISIONS OF PORT AUTHORITY OF ALLEGHENY COUNTY CONTRACT NO. LRS-98-04-R (HEREAFTER "THE CONTRACT"). THIS DOCUMENT HAS BEEN FURNISHED TO YOU ON THE FOLLOWING CONDITION: OTHER THAN WHAT IS SPECIFICALLY PROVIDED FOR IN THE CONTRACT, NO RIGHT OR LICENSE IN RESPECT TO THIS DOCUMENT OR ITS CONTENTS IS GIVEN OR WAIVED IN SUPPLYING THE DOCUMENT TO YOU. THIS DOCUMENT OR ITS CONTENTS ARE NOT TO BE USED OR TREATED IN ANY MANNER INCONSISTENT WITH THE RIGHTS OR INTERESTS OF UNION SWITCH & SIGNAL INC.

WARNING

PRIOR TO PLACING THE CIRCUIT SET FORTH ON THIS DRAWING INTO REVENUE SERVICE, THE CIRCUIT AND THE COMPLETE SYSTEM OF WHICH THIS CIRCUIT IS A PART MUST BE TESTED AS FOLLOWS: (a) CIRCUIT SELECTION (BREAKDOWN) TEST (b) SERVICE (OPERATION) TEST

UNION SWITCH & SIGNAL INC.
PITTSBURGH, PA 15219

DESIGNED	HCB	08/29/02 DATE
DRAWN	HCB	08/29/02 DATE
CHECKED	RGF	08/29/02 DATE
APPROVED BY	FLS	01/06/03 DATE

PORT AUTHORITY OF ALLEGHENY COUNTY
STAGE II LIGHT RAIL TRANSIT SYSTEM

Data IDF Wiring (3 of 7)

CONTRACT NO.	DRAWING NO.	SHEET NO.	LATEST REVISION
LRS-98-05	CC352	352	1.02

PORT AUTHORITY OF ALLEGHENY COUNTY

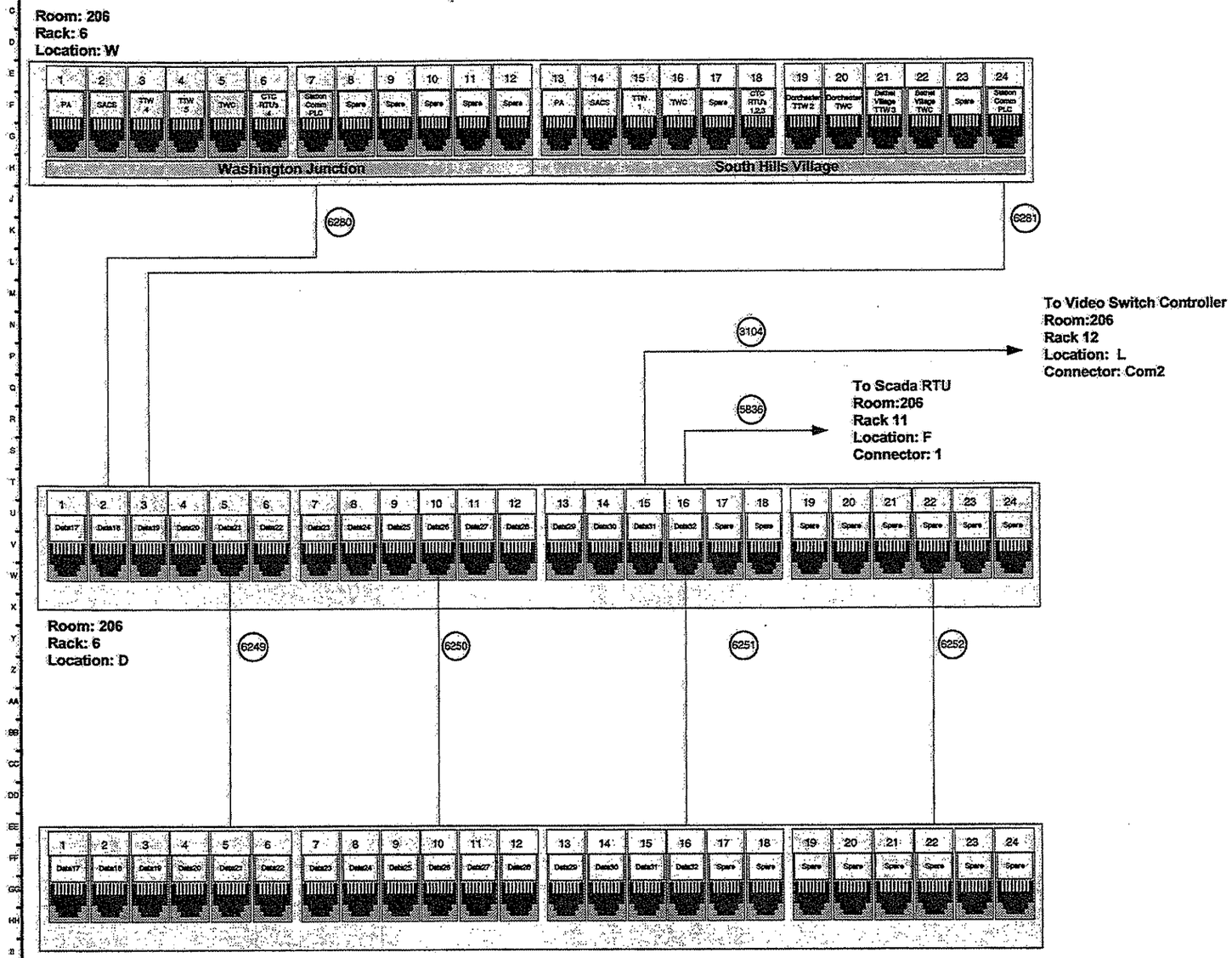

NO.	DATE	DESCRIPTION
1.02	12/20/02	Added Port for Video Switch Controller

THIS DOCUMENT AND ITS CONTENTS HAVE BEEN PREPARED BY UNION SWITCH & SIGNAL INC. OWNERSHIP AND OTHER RIGHTS WITH RESPECT TO THE DOCUMENT ARE DETERMINED BY THE APPLICABLE PROVISIONS OF PORT AUTHORITY OF ALLEGHENY COUNTY CONTRACT NO. LRS-98-05 (HEREAFTER "THE CONTRACT"). THIS DOCUMENT HAS BEEN FURNISHED TO YOU ON THE FOLLOWING CONDITION: OTHER THAN WHAT IS SPECIFICALLY PROVIDED FOR IN THE CONTRACT, NO RIGHT OR LICENSE IN RESPECT TO THIS DOCUMENT OR ITS CONTENTS IS GIVEN OR IMPLIED IN SUPPLYING THE DOCUMENT TO YOU. THIS DOCUMENT OR ITS CONTENTS ARE NOT TO BE USED OR TREATED IN ANY MANNER INCONSISTENT WITH THE RIGHTS OR INTERESTS OF UNION SWITCH & SIGNAL INC.

WARNING

PRIOR TO PLACING THE CIRCUIT SET FORTH ON THIS DRAWING INTO REVENUE SERVICE, THE CIRCUIT AND THE COMPLETE SYSTEM OF WHICH THIS CIRCUIT IS A PART MUST BE TESTED AS FOLLOWS: (1) CIRCUIT SELECTION (BREAKDOWN) TEST (2) SERVICE (OPERATION) TEST

UNION SWITCH & SIGNAL INC.
PITTSBURGH, PA 15219

DESIGNED	HCB	08/29/02 DATE
DRAWN	HCB	08/29/02 DATE
CHECKED	RGF	08/29/02 DATE
APPROVED BY	FLS	12/20/02 DATE

PORT AUTHORITY OF ALLEGHENY COUNTY
STAGE II LIGHT RAIL TRANSIT SYSTEM

Data IDF Wiring (4 of 7)

CONTRACT NO.	DRAWING NO.	SHEET NO.	LATEST REVISION
LRS-98-05	CC353	353	1.02

PORT AUTHORITY OF ALLEGHENY COUNTY

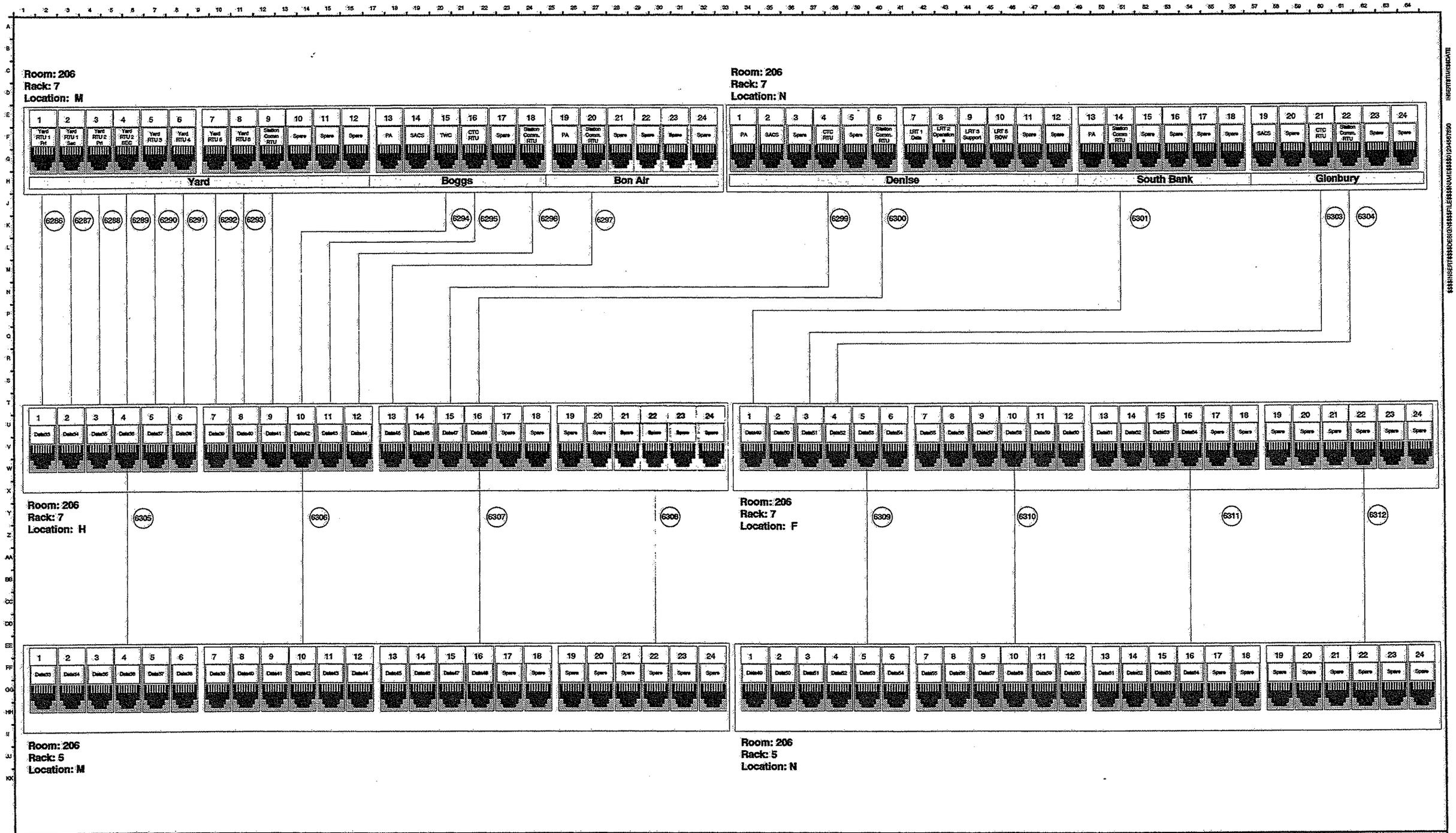

NO.	DATE	DESCRIPTION
1.02	12/17/02	Removed Denise and Glenbury TWC

THIS DOCUMENT AND ITS CONTENTS HAVE BEEN PREPARED BY UNION SWITCH & SIGNAL INC. OWNERSHIP AND OTHER RIGHTS WITH RESPECT TO THE DOCUMENT ARE DETERMINED BY THE APPLICABLE PROVISIONS OF PORT AUTHORITY OF ALLEGHENY COUNTY CONTRACT NO. LRS-98-05-R (HEREINAFTER "THE CONTRACT"). THIS DOCUMENT HAS BEEN FURNISHED TO YOU ON THE FOLLOWING CONDITION: OTHER THAN WHAT IS SPECIFICALLY PROVIDED FOR IN THE CONTRACT, NO RIGHT OR LICENSE IN RESPECT TO THIS DOCUMENT OR ITS CONTENTS IS GIVEN OR WAIVED IN SUPPLYING THE DOCUMENT TO YOU. THIS DOCUMENT OR ITS CONTENTS ARE NOT TO BE USED OR TREATED IN ANY MANNER INCONSISTENT WITH THE RIGHTS OR INTERESTS OF UNION SWITCH & SIGNAL INC.

WARNING

PRIOR TO PLACING THE CIRCUIT SET FORTH ON THIS DRAWING INTO REVENUE SERVICE, THE CIRCUIT AND THE COMPLETE SYSTEM OF WHICH THIS CIRCUIT IS A PART MUST BE TESTED AS FOLLOWS:
- (a) CIRCUIT SELECTION (BREAKDOWN) TEST
- (b) SERVICE (OPERATION) TEST

UNION SWITCH & SIGNAL INC.
PITTSBURGH, PA 15219

DESIGNED	HCB	08/29/02 DATE
DRAWN	HCB	08/29/02 DATE
CHECKED	RGF	08/29/02 DATE
APPROVED BY	FLS	12/16/02 DATE

PORT AUTHORITY OF ALLEGHENY COUNTY
STAGE II LIGHT RAIL TRANSIT SYSTEM

Data IDF Wiring (5 of 7)

CONTRACT NO.	DRAWING NO.	SHEET NO.	LATEST REVISION
LRS-98-05	CC354	354	1.02

PORT AUTHORITY OF ALLEGHENY COUNTY

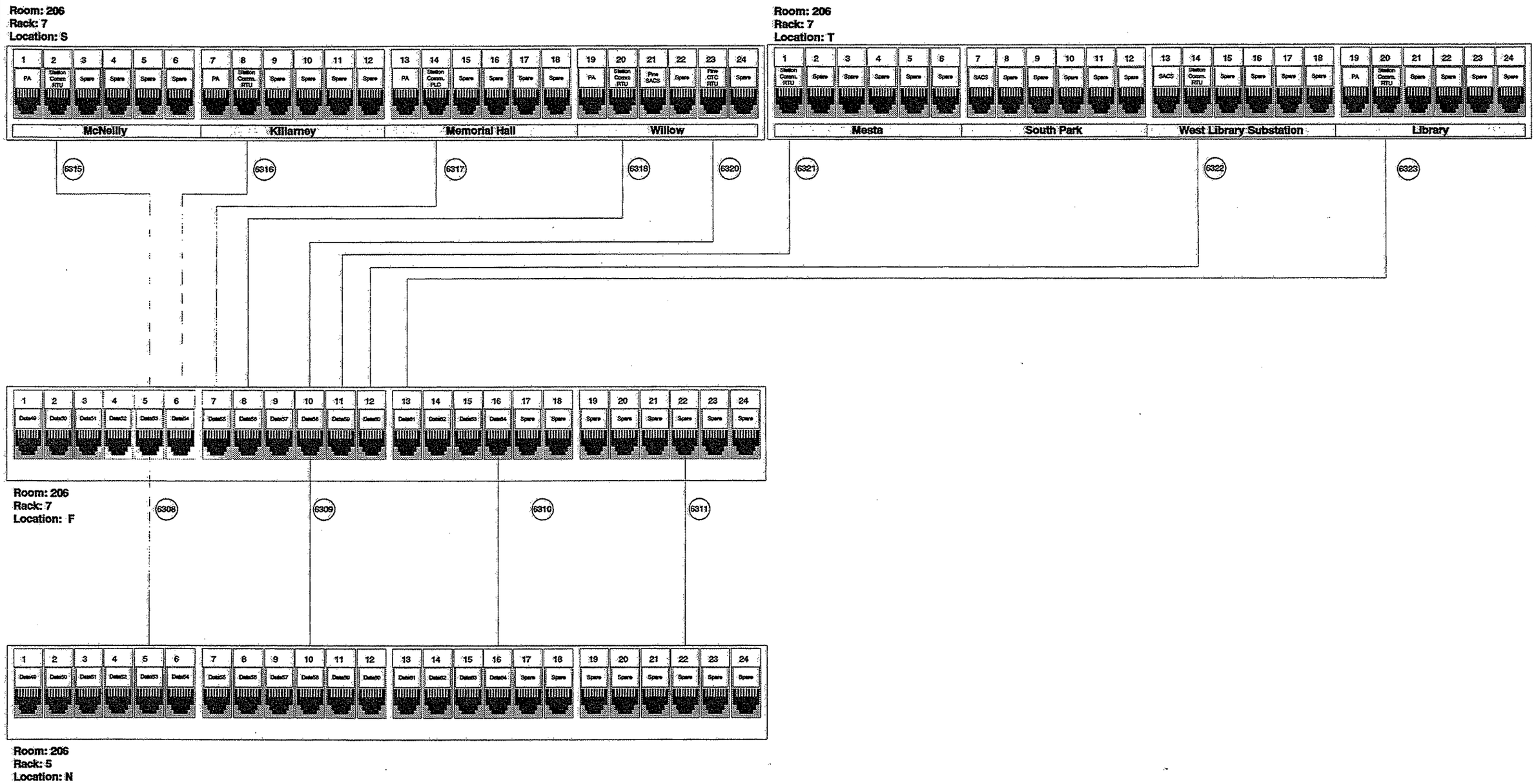

NO.	DATE	DESCRIPTION
1.02	12/17/02	Removed Pine TWC

THIS DOCUMENT AND ITS CONTENTS HAVE BEEN PREPARED BY UNION SWITCH & SIGNAL INC. OWNERSHIP AND OTHER RIGHTS WITH RESPECT TO THE DOCUMENT ARE DETERMINED BY THE APPLICABLE PROVISIONS OF PORT AUTHORITY OF ALLEGHENY COUNTY CONTRACT NO. LRS-98-05 (HEREAFTER "THE CONTRACT"). THIS DOCUMENT HAS BEEN FURNISHED TO YOU ON THE FOLLOWING CONDITION: OTHER THAN WHAT IS SPECIFICALLY PROVIDED FOR IN THE CONTRACT, NO RIGHT OR LICENSE IN RESPECT TO THIS DOCUMENT OR ITS CONTENTS IS GIVEN OR WAIVED IN SUPPLYING THE DOCUMENT TO YOU. THIS DOCUMENT OR ITS CONTENTS ARE NOT TO BE USED OR TREATED IN ANY MANNER INCONSISTENT WITH THE RIGHTS OR INTERESTS OF UNION SWITCH & SIGNAL INC.
WARNING
PRIOR TO PLACING THE CIRCUIT SET FORTH ON THIS DRAWING INTO REVENUE SERVICE, THE CIRCUIT AND THE COMPLETE SYSTEM OF WHICH THIS CIRCUIT IS A PART MUST BE TESTED AS FOLLOWS: (1) CIRCUIT SELECTION BREAKDOWN TEST
(2) SERVICE (OPERATION) TEST

UNION SWITCH & SIGNAL INC.
PITTSBURGH, PA 15219

DESIGNED	HCB	08/29/02 DATE
DRAWN	HCB	08/29/02 DATE
CHECKED	RGF	08/29/02 DATE
APPROVED BY	FLS	12/16/02 DATE

PORT AUTHORITY OF ALLEGHENY COUNTY
STAGE II LIGHT RAIL TRANSIT SYSTEM

Data IDF Wiring (6 of 7)

CONTRACT NO.	DRAWING NO.	SHEET NO.	LATEST REVISION
LRS-98-05	CC355	355	1.02

PORT AUTHORITY OF ALLEGHENY COUNTY

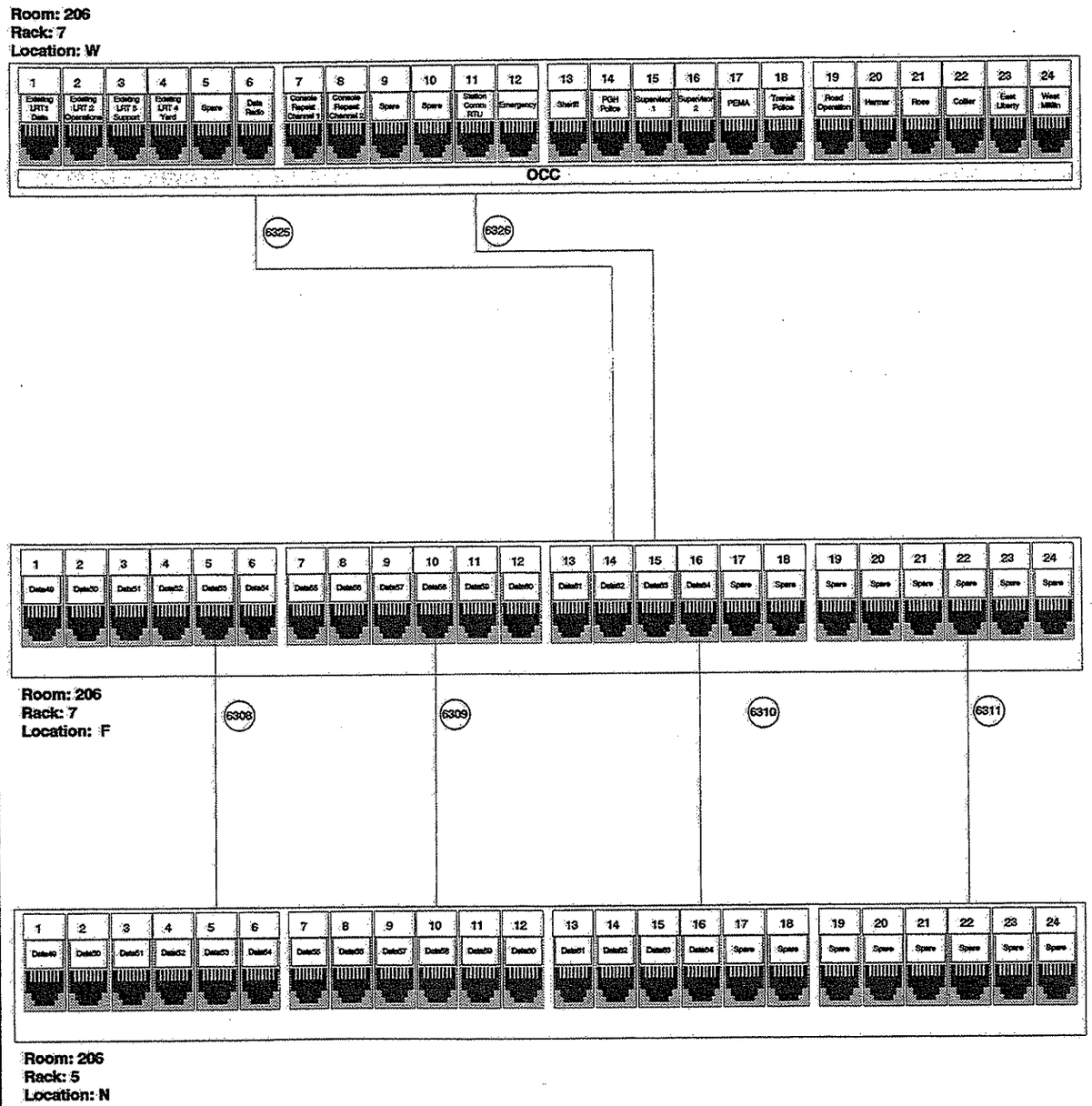

NO.	DATE	DESCRIPTION

THIS DOCUMENT AND ITS CONTENTS HAVE BEEN PREPARED BY UNION SWITCH & SIGNAL INC. OWNERSHIP AND OTHER RIGHTS WITH RESPECT TO THE DOCUMENT ARE DETERMINED BY THE APPLICABLE PROVISIONS OF PORT AUTHORITY OF ALLEGHENY COUNTY CONTRACT NO. LRS-98-05-R (HEREAFTER "THE CONTRACT"). THIS DOCUMENT HAS BEEN FURNISHED TO YOU ON THE FOLLOWING CONDITION: OTHER THAN WHAT IS SPECIFICALLY PROVIDED FOR IN THE CONTRACT, NO RIGHT OR LICENSE IN RESPECT TO THIS DOCUMENT OR ITS CONTENTS IS GIVEN OR IMPLIED IN SUPPLYING THE DOCUMENT TO YOU. THIS DOCUMENT OR ITS CONTENTS ARE NOT TO BE USED OR TREATED IN ANY MANNER INCONSISTENT WITH THE RIGHTS OR INTERESTS OF UNION SWITCH & SIGNAL INC.
WARNING
PRIOR TO PLACING THE CIRCUIT SET FORTH ON THIS DRAWING INTO REVENUE SERVICE, THE CIRCUIT AND THE COMPLETE SYSTEM OF WHICH THIS CIRCUIT IS A PART MUST BE TESTED AS FOLLOWS:
(A) CIRCUIT REJECTION (BREAKDOWN) TEST
(B) SERVICE (OPERATION) TEST

UNION SWITCH & SIGNAL INC.
PITTSBURGH, PA 15219

DESIGNED	HCB	08/29/02 DATE
DRAWN	HCB	08/29/02 DATE
CHECKED	RGF	08/29/02 DATE
APPROVED BY	FLS	12/16/02 DATE

PORT AUTHORITY OF ALLEGHENY COUNTY
STAGE II LIGHT RAIL TRANSIT SYSTEM

Data IDF Wiring (7 of 7)

CONTRACT NO.	DRAWING NO.	SHEET NO.	LATEST REVISION
LRS-98-05	CC356	356	

PORT AUTHORITY OF ALLEGHENY COUNTY

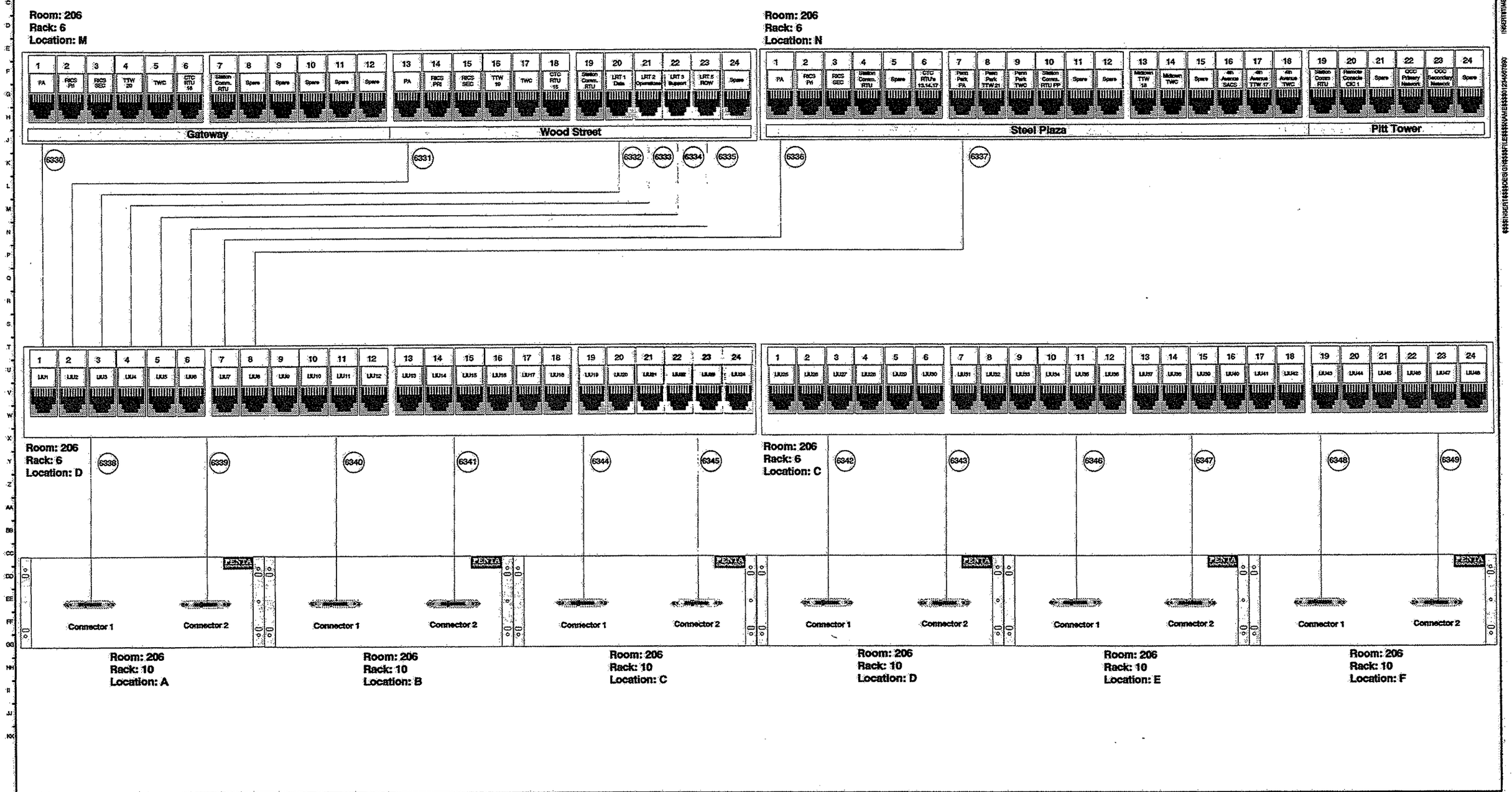

NO.	DATE	DESCRIPTION
1.02	12/17/02	Removed Remote CIC

THIS DOCUMENT AND ITS CONTENTS HAVE BEEN PREPARED BY UNION SWITCH & SIGNAL INC. OWNERSHIP AND OTHER RIGHTS WITH RESPECT TO THE DOCUMENT ARE DETERMINED BY THE APPLICABLE PROVISIONS OF PORT AUTHORITY OF ALLEGHENY COUNTY CONTRACT NO. LRS98-05 (HEREAFTER "THE CONTRACT"). THIS DOCUMENT HAS BEEN FURNISHED TO YOU ON THE FOLLOWING CONDITION: OTHER THAN WHAT IS SPECIFICALLY PROVIDED FOR IN THE CONTRACT, NO RIGHT OR LICENSE IN RESPECT TO THIS DOCUMENT OR ITS CONTENTS IS GIVEN OR WAIVED IN SUPPLYING THE DOCUMENT TO YOU. THIS DOCUMENT OR ITS CONTENTS ARE NOT TO BE USED OR TREATED IN ANY MANNER INCONSISTENT WITH THE RIGHTS OR INTERESTS OF UNION SWITCH & SIGNAL INC. WARNING: PRIOR TO PLACING THE CIRCUIT NOT FORTH ON THIS DRAWING INTO REVENUE SERVICE, THE CIRCUIT AND THE COMPLETE SYSTEM OF WHICH THIS CIRCUIT IS A PART MUST BE TESTED AS FOLLOWS: (1) CIRCUIT SELECTION (SPEAKERPHONE) TEST (2) SERVICE (OPERATION) TEST

UNION SWITCH & SIGNAL INC.
PITTSBURGH, PA 15219

DESIGNED	HCB	08/29/02 DATE
DRAWN	HCB	08/29/02 DATE
CHECKED	RGF	08/29/02 DATE
APPROVED BY	FLS	12/16/02 DATE

PORT AUTHORITY OF ALLEGHENY COUNTY
STAGE II LIGHT RAIL TRANSIT SYSTEM

VCS IDF Wiring (1 of 8)

CONTRACT NO.	DRAWING NO.	SHEET NO.	LATEST REVISION
LRS-98-05	CC360	360	1.02

PORT AUTHORITY OF ALLEGHENY COUNTY

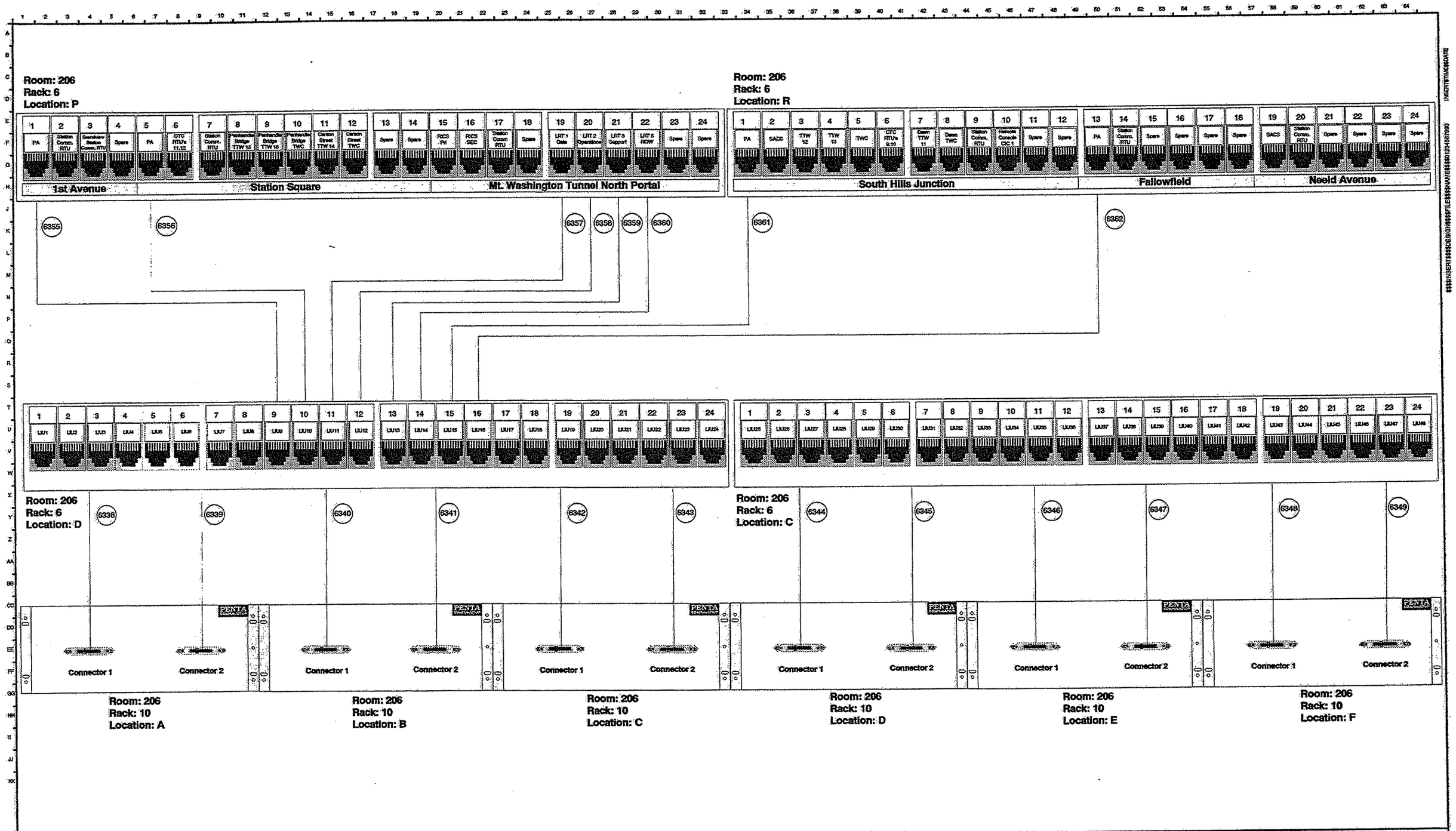

NO.	DATE	DESCRIPTION
1.02	12/17/02	Removed Remote CIC

THIS DOCUMENT AND ITS CONTENTS HAVE BEEN PREPARED BY UNION SWITCH & SIGNAL INC. OWNERSHIP AND OTHER RIGHTS WITH RESPECT TO THE DOCUMENT ARE DETERMINED BY THE APPLICABLE PROVISIONS OF PORT AUTHORITY OF ALLEGHENY COUNTY CONTRACT NO. LRS-98-05-R (HEREINAFTER "THE CONTRACT"). THIS DOCUMENT HAS BEEN FURNISHED TO YOU ON THE FOLLOWING CONDITION: OTHER THAN WHAT IS SPECIFICALLY PROVIDED FOR IN THE CONTRACT, NO RIGHT OR LICENSE IN RESPECT TO THIS DOCUMENT OR ITS CONTENTS IS GIVEN OR WAIVED IN SUPPLYING THE DOCUMENT TO YOU. THIS DOCUMENT OR ITS CONTENTS ARE NOT TO BE USED OR TREATED IN ANY MANNER INCONSISTENT WITH THE RIGHTS OR INTERESTS OF UNION SWITCH & SIGNAL INC.
WARNING
PRIOR TO PLACING THE CIRCUIT SET FORTH ON THIS DRAWING INTO REVENUE SERVICE, THE CIRCUIT AND THE COMPLETE SYSTEM OF WHICH THIS CIRCUIT IS A PART MUST BE TESTED AS FOLLOWS:
(A) CIRCUIT SELECTION (BREAKDOWN) TEST
(B) SERVICE (OPERATION) TEST

UNION SWITCH & SIGNAL INC.
PITTSBURGH, PA 15219

DESIGNED	HCB	08/29/02 DATE
DRAWN	HCB	08/29/02 DATE
CHECKED	RGF	08/29/02 DATE
APPROVED BY	FLS	12/16/02 DATE

PORT AUTHORITY OF ALLEGHENY COUNTY
STAGE II LIGHT RAIL TRANSIT SYSTEM

VCS IDF Wiring (2 of 8)

CONTRACT NO.	DRAWING NO.	SHEET NO.	LATEST REVISION
LRS-98-05	CC361	361	1.02

PORT AUTHORITY OF ALLEGHENY COUNTY

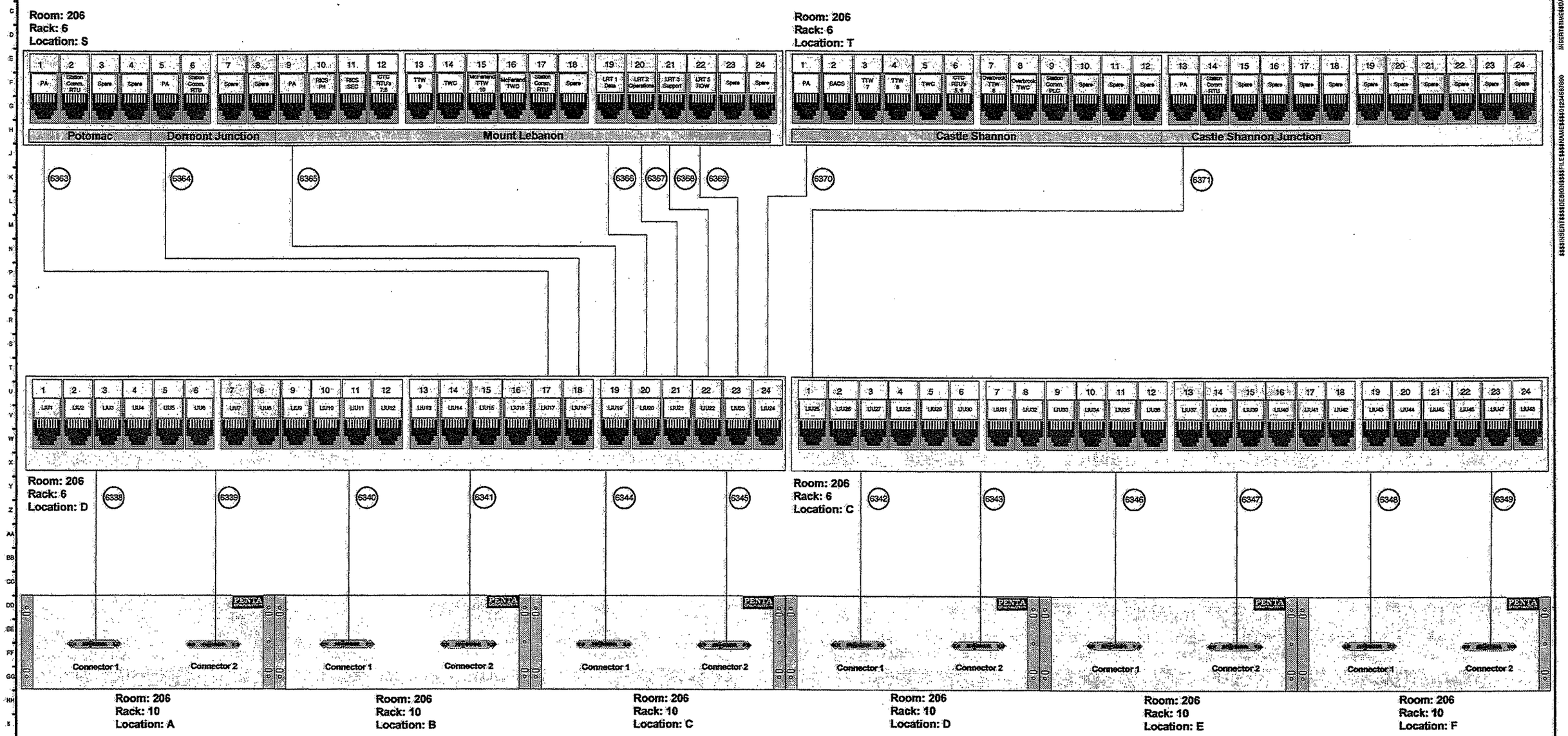

NO.	DATE	DESCRIPTION
1.02	01/06/03	Updated CTC RTU Number

THIS DOCUMENT AND ITS CONTENTS HAVE BEEN PREPARED BY UNION SWITCH & SIGNAL INC. OWNERSHIP AND OTHER RIGHTS WITH RESPECT TO THE DOCUMENT ARE DETERMINED BY THE APPLICABLE PROVISIONS OF PORT AUTHORITY OF ALLEGHENY COUNTY CONTRACT NO. LRS-98-05-R (HEREAFTER "THE CONTRACT"). THIS DOCUMENT HAS BEEN FURNISHED TO YOU ON THE FOLLOWING CONDITION: OTHER THAN WHAT IS SPECIFICALLY PROVIDED FOR IN THE CONTRACT, NO RIGHT OR LICENSE IN RESPECT TO THIS DOCUMENT OR ITS CONTENTS IS GIVEN OR WAIVED IN SUPPLYING THE DOCUMENT TO YOU. THIS DOCUMENT OR ITS CONTENTS ARE NOT TO BE USED OR TREATED IN ANY MANNER INCONSISTENT WITH THE RIGHTS OR INTERESTS OF UNION SWITCH & SIGNAL INC.

WARNING

PRIOR TO PLACING THE CIRCUIT SET FORTH ON THIS DRAWING INTO REVENUE SERVICE, THE CIRCUIT AND THE COMPLETE SYSTEM OF WHICH THIS CIRCUIT IS A PART MUST BE TESTED AS FOLLOWS:
(A) CIRCUIT SELECTION (BREAKDOWN) TEST
(B) SERVICE (OPERATION) TEST

UNION SWITCH & SIGNAL INC.
PITTSBURGH, PA 15219

DESIGNED	HCB	08/29/02 DATE
DRAWN	HCB	08/29/02 DATE
CHECKED	RGF	08/29/02 DATE
APPROVED BY	FLS	01/06/03 DATE

PORT AUTHORITY OF ALLEGHENY COUNTY
STAGE II LIGHT RAIL TRANSIT SYSTEM

VCS IDF Wiring (3 of 8)

CONTRACT NO.	DRAWING NO.	SHEET NO.	LATEST REVISION
LRS-98-05	CC362	362	1.02

PORT AUTHORITY OF ALLEGHENY COUNTY

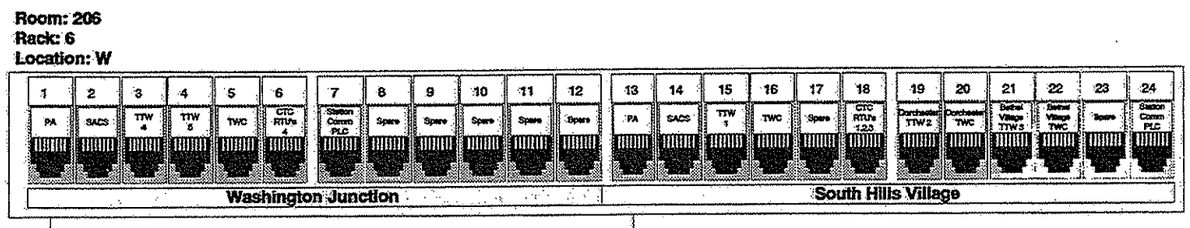

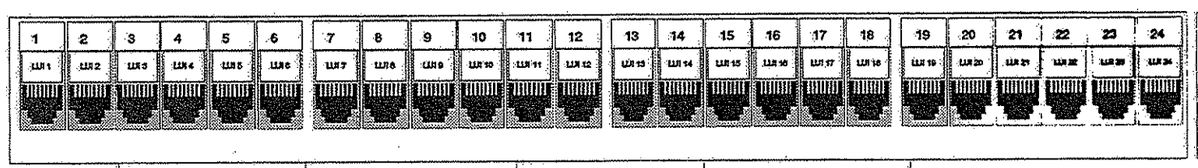

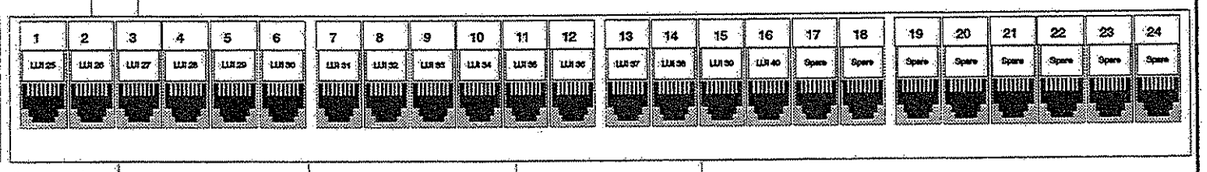

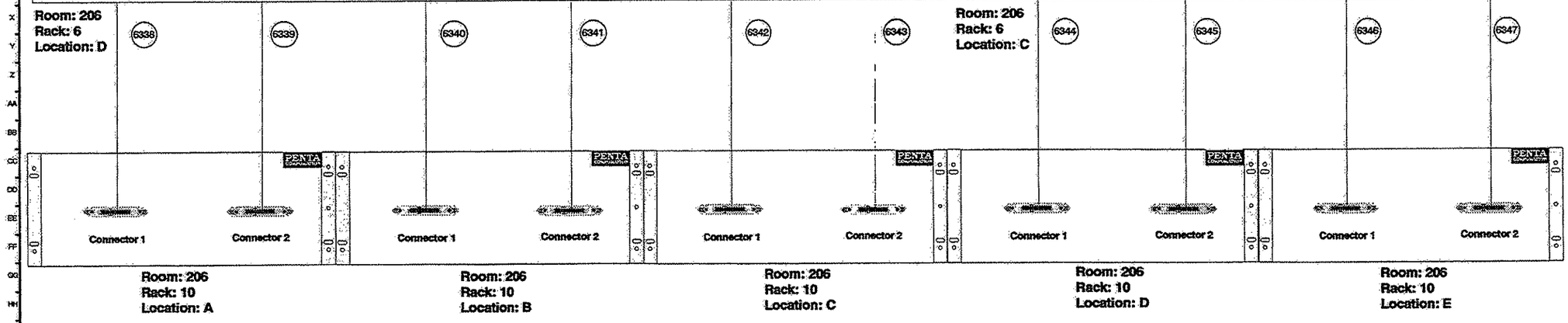

NO.	DATE	DESCRIPTION

THIS DOCUMENT AND ITS CONTENTS HAVE BEEN PREPARED BY UNION SWITCH & SIGNAL INC. OWNERSHIP AND OTHER RIGHTS WITH RESPECT TO THE DOCUMENT ARE DETERMINED BY THE APPLICABLE PROVISIONS OF PORT AUTHORITY OF ALLEGHENY COUNTY CONTRACT NO. LRS-98-05 (HEREINAFTER "THE CONTRACT"). THIS DOCUMENT HAS BEEN FURNISHED TO YOU ON THE FOLLOWING CONDITION: OTHER THAN WHAT IS SPECIFICALLY PROVIDED FOR IN THE CONTRACT, NO RIGHT OR LICENSE IN RESPECT TO THIS DOCUMENT OR ITS CONTENTS IS GIVEN OR IMPLIED IN SUPPLYING THE DOCUMENT TO YOU. THIS DOCUMENT OR ITS CONTENTS ARE NOT TO BE USED OR EXECUTED IN ANY MANNER INCONSISTENT WITH THE RIGHTS OR INTERESTS OF UNION SWITCH & SIGNAL INC.

WARNING

PRIOR TO PLACING THE CIRCUIT SET FORTH ON THIS DRAWING INTO REVENUE SERVICE, THE CIRCUIT AND THE COMPLETE SYSTEM OF WHICH THIS CIRCUIT IS A PART MUST BE TESTED AS FOLLOWS:
(a) CIRCUIT SELECTION (PRE/NO CORN) TEST
(b) SERVICE (OPERATION) TEST

UNION SWITCH & SIGNAL INC.
PITTSBURGH, PA 15219

DESIGNED	HCB	08/29/02 DATE
DRAWN	HCB	08/29/02 DATE
CHECKED	RGF	08/29/02 DATE
APPROVED BY	FLS	12/16/02 DATE

PORT AUTHORITY OF ALLEGHENY COUNTY
STAGE II LIGHT RAIL TRANSIT SYSTEM

VCS IDF Wiring (4 of 8)

CONTRACT NO.	DRAWING NO.	SHEET NO.	LATEST REVISION
LRS-98-05	CC363	363	

PORT AUTHORITY OF ALLEGHENY COUNTY

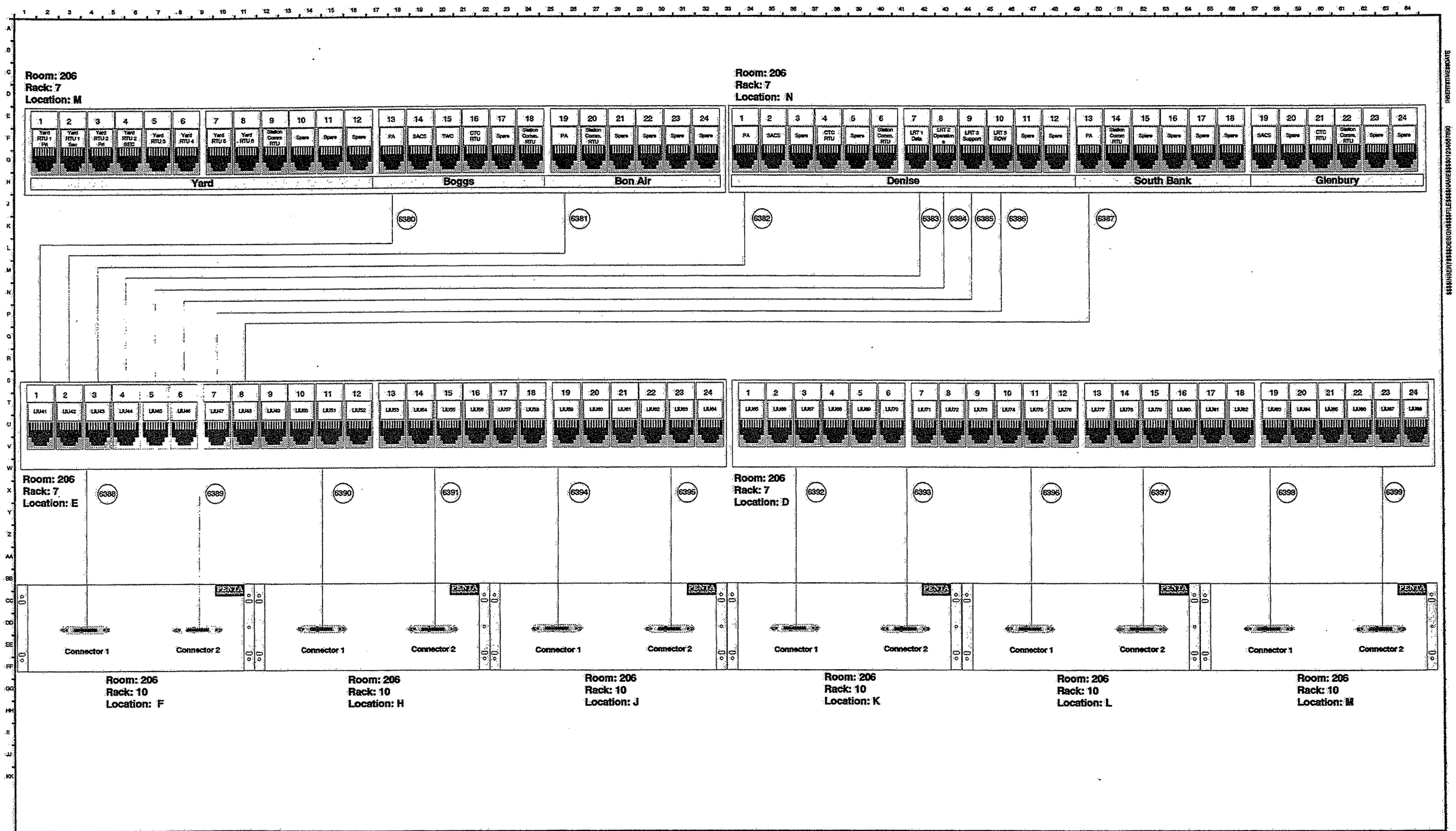

NO.	DATE	DESCRIPTION
1.02	12/17/02	Removed Denise and Glenbury TWC

THIS DOCUMENT AND ITS CONTENTS HAVE BEEN PREPARED BY UNION SWITCH & SIGNAL INC. OWNERSHIP AND OTHER RIGHTS WITH RESPECT TO THE DOCUMENT ARE DETERMINED BY THE APPLICABLE PROVISIONS OF PORT AUTHORITY OF ALLEGHENY COUNTY CONTRACT NO. LRS-98-05 (HEREAFTER "THE CONTRACT"). THIS DOCUMENT HAS BEEN FURNISHED TO YOU ON THE FOLLOWING CONDITION: OTHER THAN WHAT IS SPECIFICALLY PROVIDED FOR IN THE CONTRACT, NO RIGHT OR LICENSE IN RESPECT TO THIS DOCUMENT OR ITS CONTENTS IS GIVEN OR WAIVED IN SUPPLYING THE DOCUMENT TO YOU. THIS DOCUMENT OR ITS CONTENTS ARE NOT TO BE USED OR TREATED IN ANY MANNER INCONSISTENT WITH THE RIGHTS OR INTERESTS OF UNION SWITCH & SIGNAL INC.
WARNING
PRIOR TO PLACING THE CIRCUIT SET FORTH ON THIS DRAWING INTO PRIMARY SERVICE, THE CIRCUIT AND THE COMPLETE SYSTEM OF WHICH THIS CIRCUIT IS A PART MUST BE TESTED AS FOLLOWS: (A) CIRCUIT SELECTION (BREAKDOWN) TEST (B) SERVICE (OPERATION) TEST

UNION SWITCH & SIGNAL INC.
PITTSBURGH, PA 15219

DESIGNED	HCB	08/29/02 DATE
DRAWN	HCB	08/29/02 DATE
CHECKED	RGF	08/29/02 DATE
APPROVED BY	FLS	12/16/02 DATE

PORT AUTHORITY OF ALLEGHENY COUNTY
STAGE II LIGHT RAIL TRANSIT SYSTEM

VCS IDF Wiring (5 of 8)

CONTRACT NO.	DRAWING NO.	SHEET NO.	LATEST REVISION
LRS-98-05	CC354	364	1.02

PORT AUTHORITY OF ALLEGHENY COUNTY

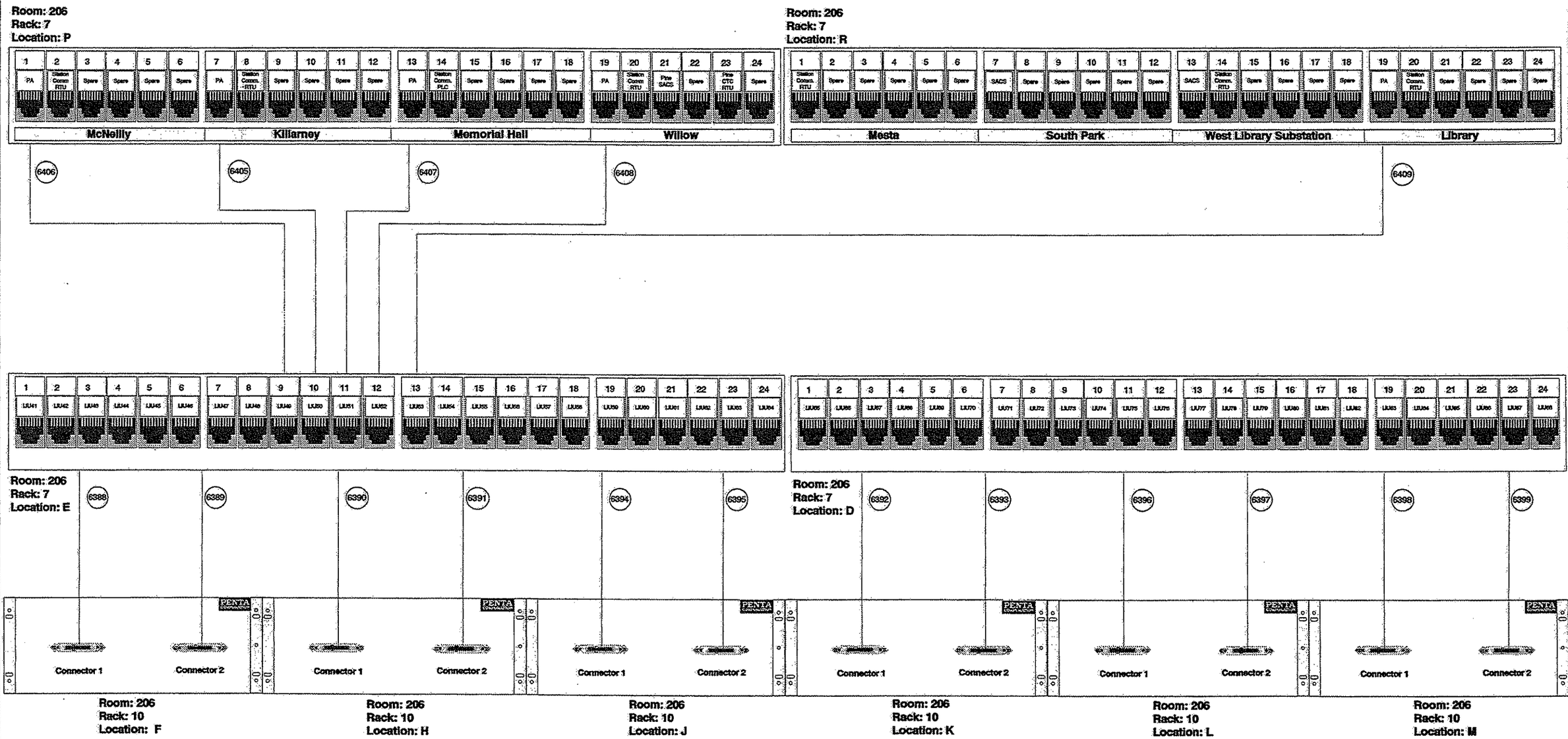

NO.	DATE	DESCRIPTION
1.02	12/17/02	Removed Pine TWC

THIS DOCUMENT AND ITS CONTENTS HAVE BEEN PREPARED BY UNION SWITCH & SIGNAL INC. OWNERSHIP AND OTHER RIGHTS WITH RESPECT TO THE DOCUMENT ARE DETERMINED BY THE APPLICABLE PROVISIONS OF PORT AUTHORITY OF ALLEGHENY COUNTY CONTRACT NO. LRS-98-05 (HEREAFTER "THE CONTRACT"). THIS DOCUMENT HAS BEEN FURNISHED TO YOU ON THE FOLLOWING CONDITION: EXCEPT THAT WHICH IS SPECIFICALLY PROVIDED FOR IN THE CONTRACT, NO RIGHT OR LICENSE IN RESPECT TO THIS DOCUMENT OR ITS CONTENTS IS GIVEN OR WAIVED IN SUPPLYING THE DOCUMENT TO YOU. THIS DOCUMENT OR ITS CONTENTS ARE NOT TO BE USED OR TREATED IN ANY MANNER INCONSISTENT WITH THE RIGHTS OR INTERESTS OF UNION SWITCH & SIGNAL INC.

WARNING

PRIOR TO PLACING THE CIRCUIT SET FORTH ON THIS DRAWING INTO REVENUE SERVICE, THE CIRCUIT AND THE COMPLETE SYSTEM OF WHICH THIS CIRCUIT IS A PART MUST BE TESTED AS FOLLOWS:
(1) CIRCUIT SELECTION (BREAKDOWN) TEST
(2) SERVICE (OPERATION) TEST

UNION SWITCH & SIGNAL INC.
PITTSBURGH, PA 15219

DESIGNED	HCB	08/29/02 DATE
DRAWN	HCB	08/29/02 DATE
CHECKED	RGF	08/29/02 DATE
APPROVED BY	FLS	12/16/02 DATE

PORT AUTHORITY OF ALLEGHENY COUNTY
STAGE II LIGHT RAIL TRANSIT SYSTEM

VCS IDF Wiring (6 of 8)

CONTRACT NO.	DRAWING NO.	SHEET NO.	LATEST REVISION
LRS-98-05	CC365	365	1.02

PORT AUTHORITY OF ALLEGHENY COUNTY

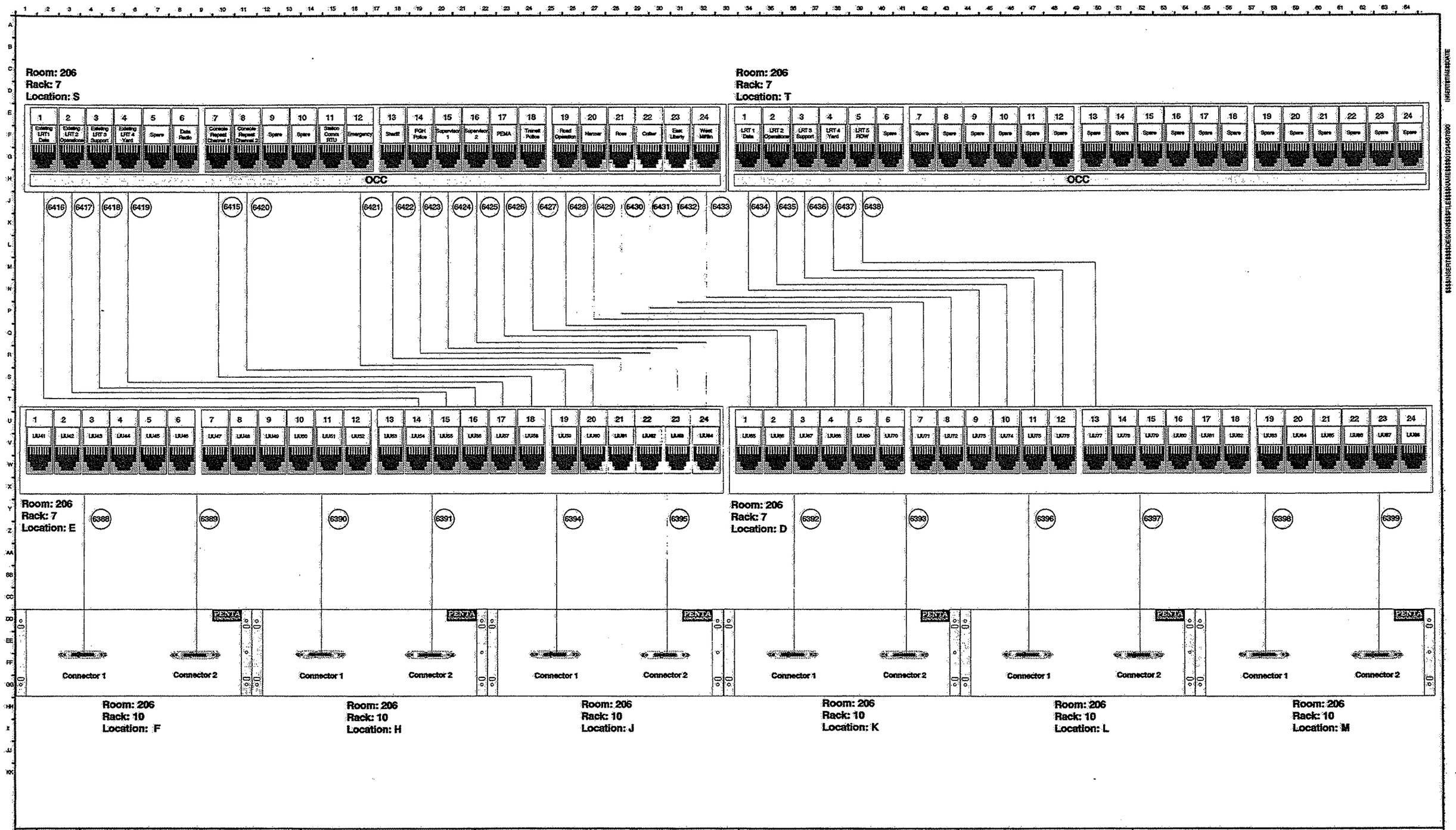

NO.	DATE	DESCRIPTION
1.02	12/17/02	Delete BTO and Dispatcher Intercomm

THIS DOCUMENT AND ITS CONTENTS HAVE BEEN PREPARED BY UNION SWITCH & SIGNAL INC. OWNERSHIP AND OTHER RIGHTS WITH RESPECT TO THE DOCUMENT ARE DETERMINED BY THE APPLICABLE PROVISIONS OF PORT AUTHORITY OF ALLEGHENY COUNTY CONTRACT NO. LRS-98-05-R (HEREAFTER "THE CONTRACT"). THIS DOCUMENT HAS BEEN FURNISHED TO YOU ON THE FOLLOWING CONDITION: EXCEPT FOR WHAT IS SPECIFICALLY PROVIDED FOR IN THE CONTRACT, NO RIGHT OR LICENSE IN RESPECT TO THIS DOCUMENT OR ITS CONTENTS IS GIVEN OR WAIVED IS SUPPLIED THE DOCUMENT TO YOU. THIS DOCUMENT OR ITS CONTENTS ARE NOT TO BE USED OR TRADED IN ANY MANNER INCONSISTENT WITH THE RIGHTS OR INTERESTS OF UNION SWITCH & SIGNAL INC.
WARNING
PRIOR TO PLACING THE CIRCUIT SET FORTH ON THIS DRAWING INTO REVENUE SERVICE, THE CIRCUIT AND THE COMPLETE SYSTEM OF WHICH THIS CIRCUIT IS A PART MUST BE TESTED AS FOLLOWS:
(1) CIRCUIT SELECTION (BREAKDOWN) TEST
(2) SIGNAL (OPERATION) TEST

UNION SWITCH & SIGNAL INC.
PITTSBURGH, PA 15219

DESIGNED	HCB	08/29/02 DATE
DRAWN	HCB	08/29/02 DATE
CHECKED	RGF	08/29/02 DATE
APPROVED BY	FLS	12/16/02 DATE

PORT AUTHORITY OF ALLEGHENY COUNTY
STAGE II LIGHT RAIL TRANSIT SYSTEM

VCS IDF Wiring (7 of 8)

CONTRACT NO.	DRAWING NO.	SHEET NO.	LATEST REVISION
LRS-98-05	CC366	366	1.02

PORT AUTHORITY OF ALLEGHENY COUNTY

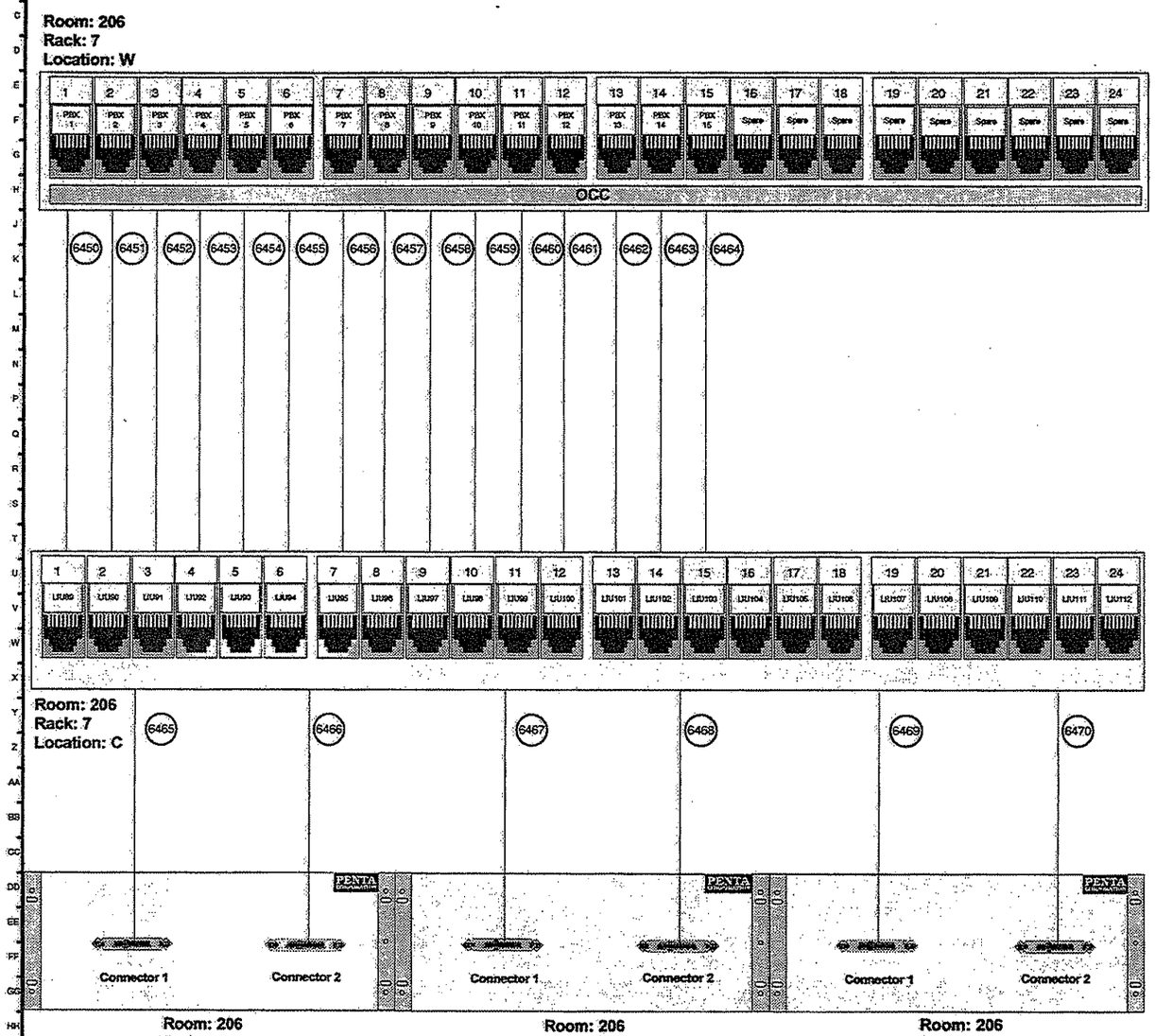

NO.	DATE	DESCRIPTION

THIS DOCUMENT AND ITS CONTENTS HAVE BEEN PREPARED BY UNION SWITCH & SIGNAL INC. OWNERSHIP AND OTHER RIGHTS WITH RESPECT TO THE DOCUMENT ARE DETERMINED BY THE APPLICABLE PROVISIONS OF PORT AUTHORITY OF ALLEGHENY COUNTY CONTRACT NO. LRS-98-05-R (HEREINAFTER "THE CONTRACT"). THIS DOCUMENT HAS BEEN FURNISHED TO YOU ON THE FOLLOWING CONDITION: OTHER THAN WHAT IS SPECIFICALLY PROVIDED FOR IN THE CONTRACT, NO RIGHT OR LICENSE IN RESPECT TO THIS DOCUMENT OR ITS CONTENTS IS GIVEN OR INFERRED IN SUPPLYING THE DOCUMENT TO YOU. THIS DOCUMENT OR ITS CONTENTS ARE NOT TO BE USED OR TREATED IN ANY MANNER INCONSISTENT WITH THE RIGHTS OR INTERESTS OF UNION SWITCH & SIGNAL INC.

WARNING

PRIOR TO PLACING THE CIRCUIT SET FORTH ON THIS DRAWING INTO REVENUE SERVICE, THE CIRCUIT AND THE COMPLETE SYSTEM OF WHICH THIS CIRCUIT IS A PART MUST BE TESTED AS FOLLOWS: (A) CIRCUIT SELECTION (BREAKDOWN) TEST (B) SERVICE (OPERATION) TEST

UNION SWITCH & SIGNAL INC.
PITTSBURGH, PA 15219

DESIGNED	HCB	08/29/02 DATE
DRAWN	HCB	08/29/02 DATE
CHECKED	RGF	08/29/02 DATE
APPROVED BY	FLS	12/20/02 DATE

PORT AUTHORITY OF ALLEGHENY COUNTY
STAGE II LIGHT RAIL TRANSIT SYSTEM

VCS IDF Wiring (8 of 8)

CONTRACT NO.	DRAWING NO.	SHEET NO.	LATEST REVISION
LRS-98-05	CC367	367	

PORT AUTHORITY OF ALLEGHENY COUNTY

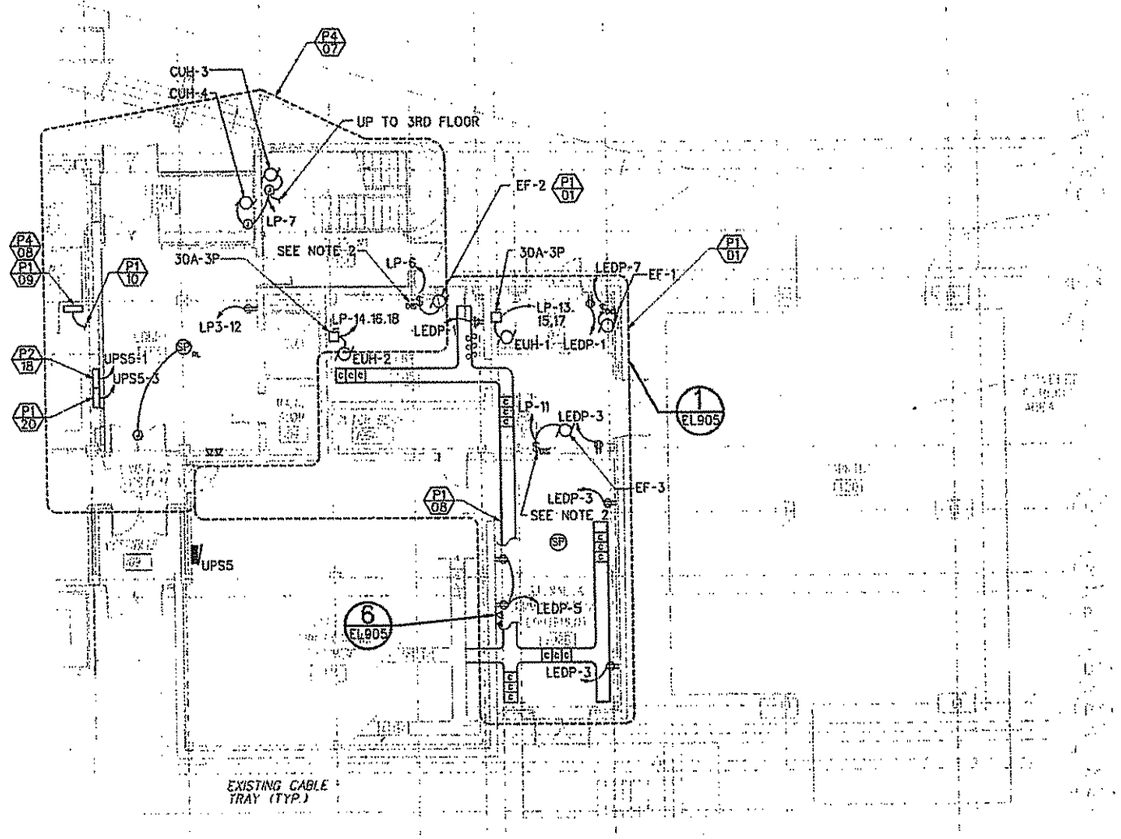

POWER/SYSTEMS PLAN - GROUND FLOOR (2)

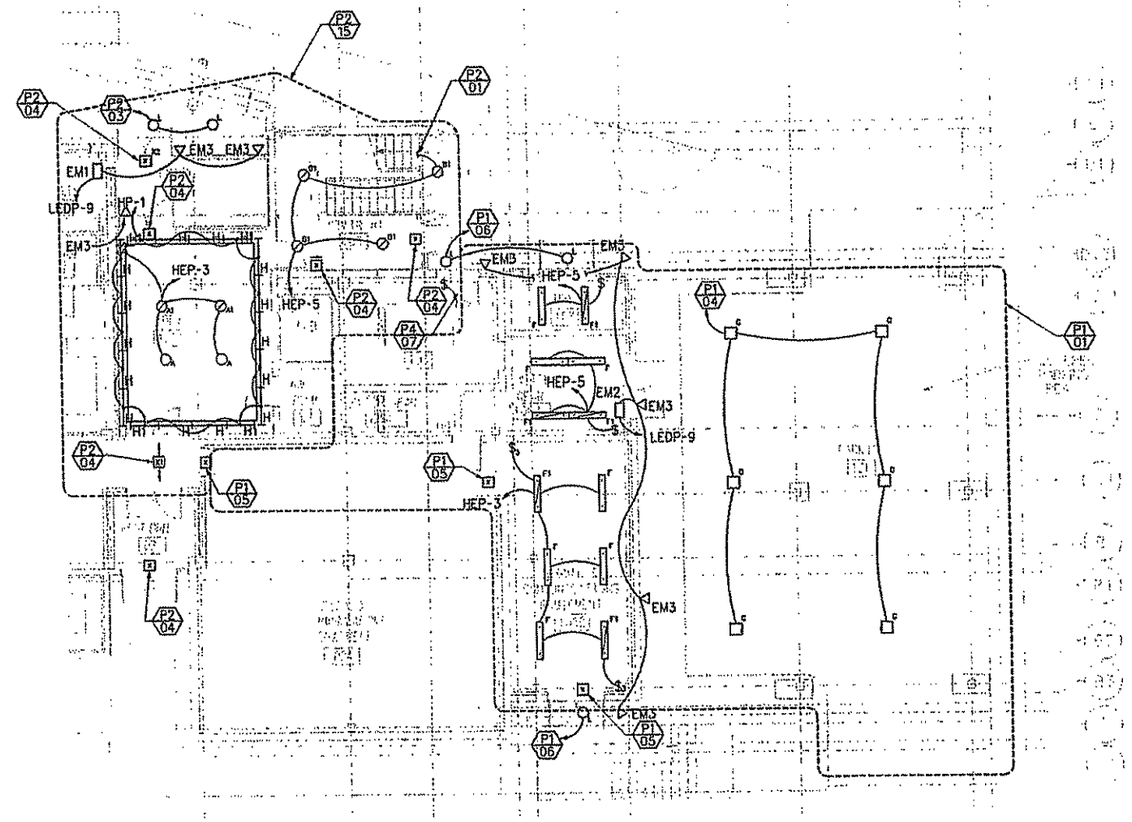

LIGHTING PLAN - GROUND FLOOR (1)

BLDG. NORTH

NOTES:
1 REFER TO DRAWING EL911 FOR PHASING & CONSTRUCTION NOTES
2 LOCATE FAN DISCONNECT SWITCH 5'-0" AFF
3 REFER TO DRAWINGS PH901 THRU PH910 FOR LIMITS OF CONSTRUCTION BY PHASE

DWG NO.	DESCRIPTION	NO.	DATE	DESCRIPTION
REFERENCE		REVISIONS		

THE PREPARATION OF THIS DRAWING HAS BEEN FINANCED, IN PART, THROUGH A GRANT FROM THE U.S. DEPARTMENT OF TRANSPORTATION, FEDERAL TRANSIT ADMINISTRATION ACT OF 1964, AS AMENDED

COMMONWEALTH OF PENNSYLVANIA — REGISTERED PROFESSIONAL ENGINEER

SUBMITTED 5/19/99 DATE

GAEC
DE LEUW- CATHER/URS GREINER/CDM
A JOINT VENTURE
APPROVED 5/19/99 DATE

DESIGNED	RMA/LMM
DRAWN	MMM
CHECKED	LMM
IN CHARGE	LMM
DATE	MAY 19, 1999
SCALE	0 2' 4' 8' 16'

PORT AUTHORITY OF ALLEGHENY COUNTY
PITTSBURGH PENNSYLVANIA

STAGE II LIGHT RAIL TRANSIT SYSTEM
OPERATIONS CONTROL CENTER FACILITY
GROUND FLOOR POWER/SYSTEMS & LIGHTING PLAN

CONTRACT NO. LRS-98-02-E
DWG. NO. EL901 SHT. 86

$USERNAME$
$TIME$
$DATE$
$FILE$

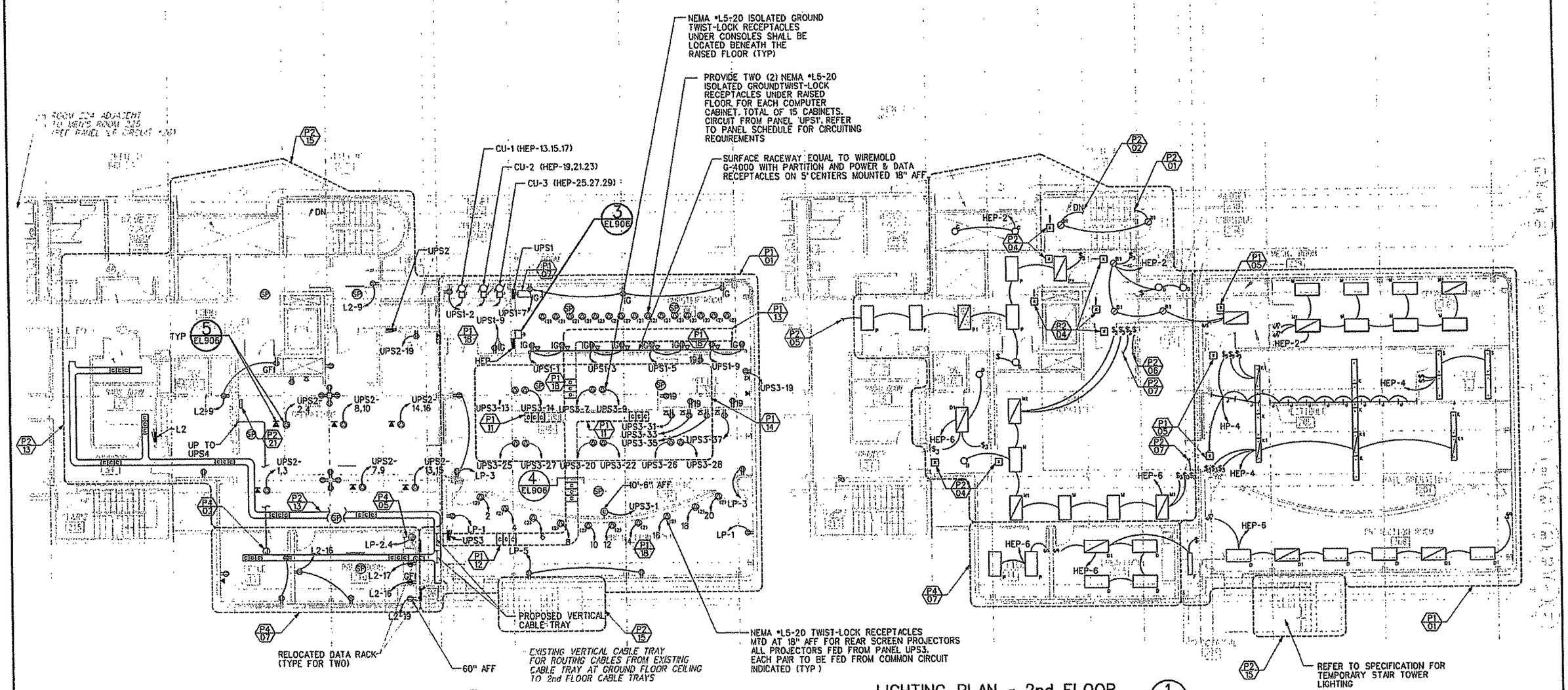

POWER/SYSTEMS PLAN - 2nd FLOOR (2)

NOTE: SYMBOL ⊕ INDICATES 20 AMPERE TWIST-LOCK RECEPTACLE. 120V. 2 POLE, 3-WIRE GROUNDING TYPE NEMA L5-20 SUBSCRIPT DENOTES QUANTITY

LIGHTING PLAN - 2nd FLOOR (1)

NOTES:

1 REFER TO DRAWING EL911 FOR PHASING & CONSTRUCTION NOTES

2 REFER TO DRAWINGS PH901 THRU PH910 FOR LIMITS OF CONSTRUCTION BY PHASE

DWG. NO.	DESCRIPTION	NO.	DATE	DESCRIPTION
REFERENCE		REVISIONS		

THE PREPARATION OF THIS DRAWING HAS BEEN FINANCED, IN PART, THROUGH A GRANT FROM THE U.S. DEPARTMENT OF TRANSPORTATION, FEDERAL TRANSIT ADMINISTRATION ACT OF 1964, AS AMENDED

COMMONWEALTH OF PENNSYLVANIA — REGISTERED PROFESSIONAL — LAWRENCE M. MOREHOUSE — LICENSED — No. 18-18-1

SUBMITTED 5/14/99 DATE

GAEC DE LEUW, CATHER/URS GREINER/CDM A JOINT VENTURE

APPROVED 5/14/99 DATE

DESIGNED	RMA/LMM
DRAWN	MMM
CHECKED	LMM
IN CHARGE	LMM
DATE	MAY 19, 1999
SCALE	0 2' 4' 8' 16'

PORT AUTHORITY OF ALLEGHENY COUNTY
PITTSBURGH PENNSYLVANIA

STAGE II LIGHT RAIL TRANSIT SYSTEM

OPERATIONS CONTROL CENTER FACILITY

SECOND FLOOR POWER/SYSTEMS & LIGHTING PLAN

CONTRACT NO. LRS-98-02-E

DWG. NO. EL902 SHT. 87

$USERNAME$ $TIME$ $DATE$ $FILE$

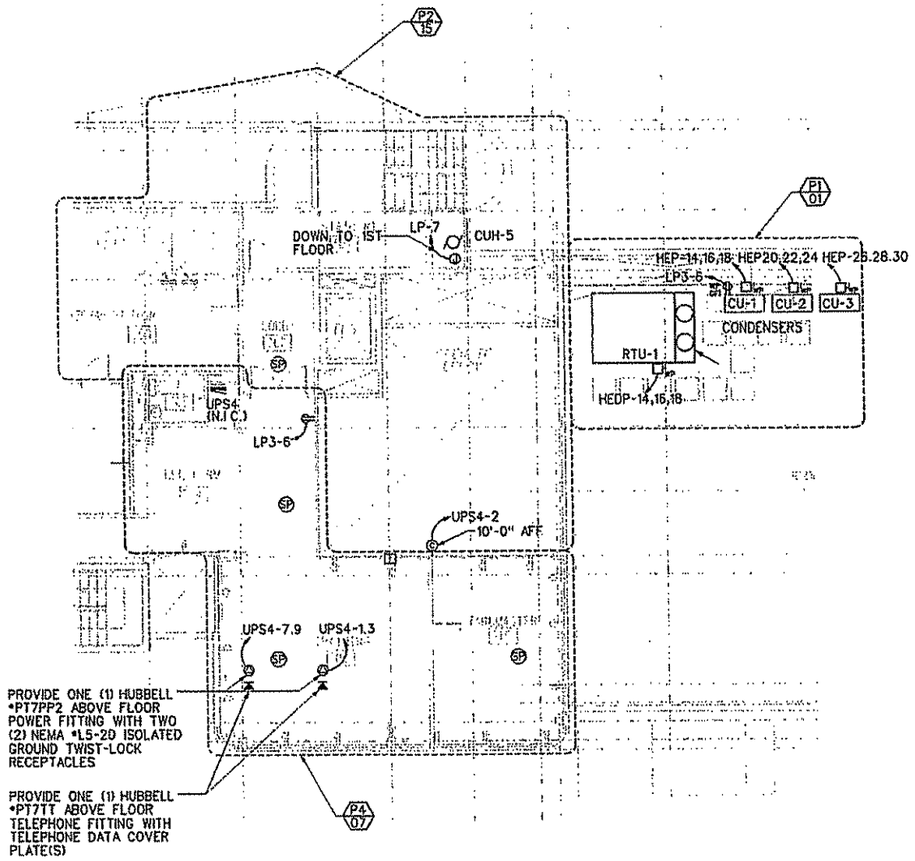

POWER/SYSTEMS PLAN - 3rd FLOOR (2)

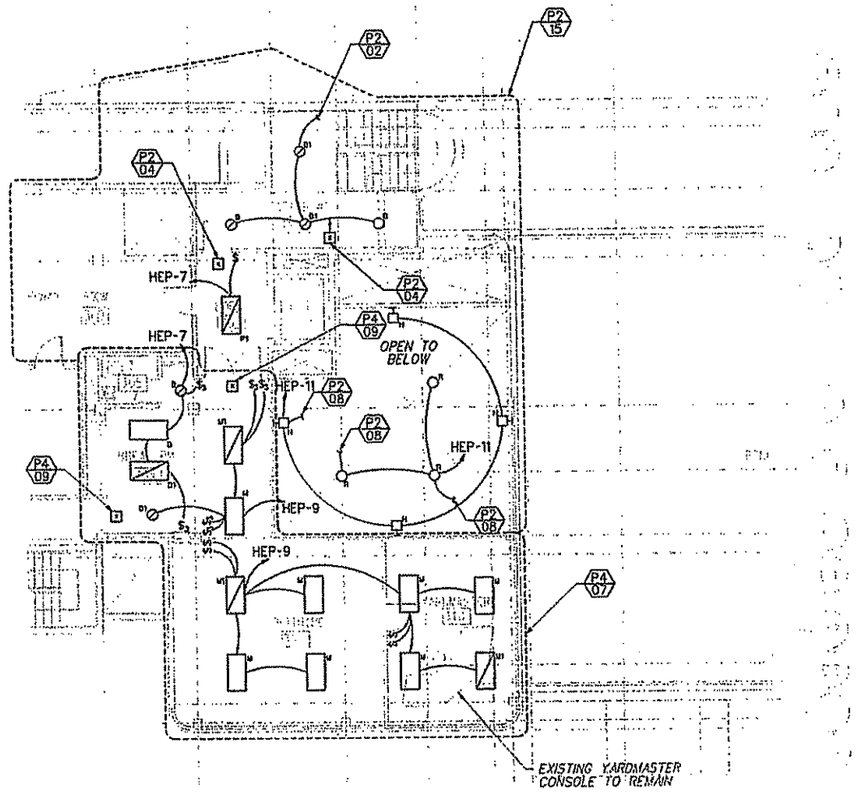

LIGHTING PLAN - 3rd FLOOR (1)

NOTES:
1 REFER TO DRAWING EL911 FOR PHASING & CONSTRUCTION NOTES
2 LOCATE FAN DISCONNECT SWITCH 5'-0" AFF
3 REFER TO DRAWINGS PH901 THRU PH910 FOR LIMITS OF CONSTRUCTION BY PHASE

DWG. NO	DESCRIPTION	NO.	DATE	DESCRIPTION
REFERENCE		REVISIONS		

THE PREPARATION OF THIS DRAWING HAS BEEN FINANCED, IN PART, THROUGH A GRANT FROM THE U.S. DEPARTMENT OF TRANSPORTATION, FEDERAL TRANSIT ADMINISTRATION ACT OF 1964, AS AMENDED

COMMONWEALTH OF PENNSYLVANIA REGISTERED PROFESSIONAL ENGINEER LAWRENCE M. MOREHOUSE

SUBMITTED 5/14/99 DATE

GAEC
DE LEUW, CATHER/URS GREINER/CDM
A JOINT VENTURE
APPROVED DATE 5/14/99

DESIGNED	RMA/LMM
DRAWN	MMM
CHECKED	LMM
IN CHARGE	LMM
DATE	MAY 19, 1999
SCALE	0 2' 4' 8' 16'

PORT AUTHORITY OF ALLEGHENY COUNTY
PITTSBURGH PENNSYLVANIA
STAGE II LIGHT RAIL TRANSIT SYSTEM
OPERATIONS CONTROL CENTER FACILITY
THIRD FLOOR POWER SYSTEMS & LIGHTING PLAN

CONTRACT NO. LRS-98-02-E
DWG. NO. EL903 SHT. 88

$DATE$ $TIME$ $USERNAME$
$FILE$

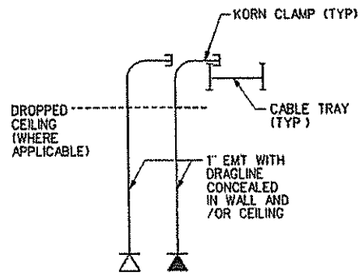

VOICE/DATA OUTLET (TYP.) 6 EL901
NTS

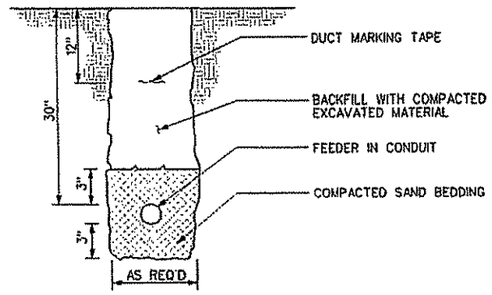

RADIO TOWER ANTENNA 7 EL900
NTS

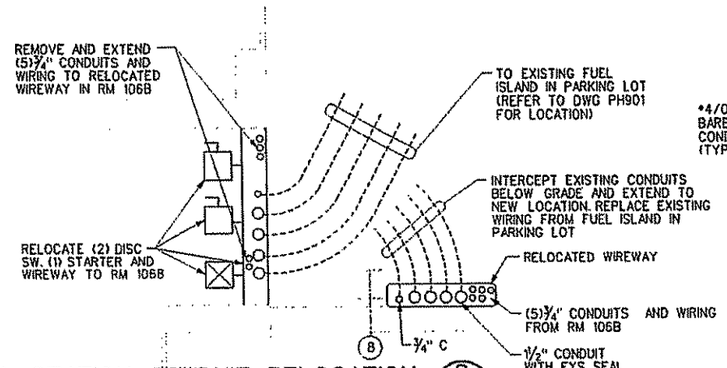

P1 D1 FUEL STATION CONDUIT RELOCATION 8
0 .5' 1' 2' 4'

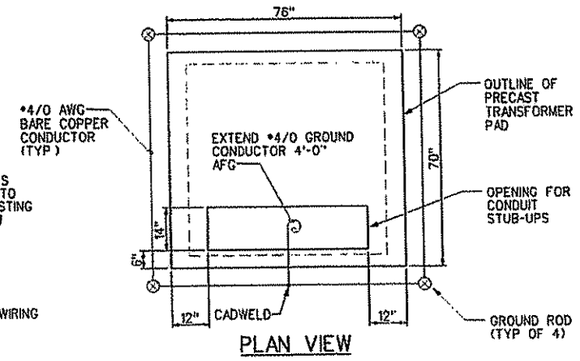

PLAN VIEW

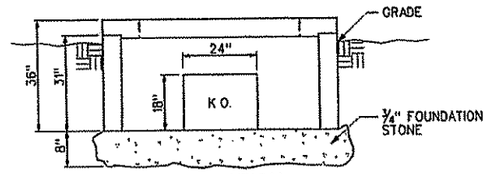

ELEVATION

PRE-CAST TRANSFORMER PAD DETAILS 2 EL900
0 1' 2' 4'

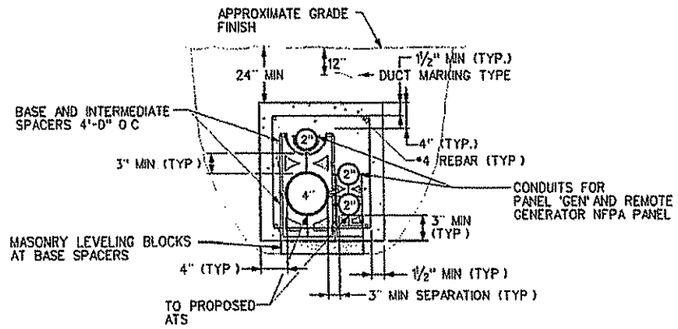

NOTE: ALL CONCRETE ENCASED DUCT BANKS SHALL BE FORMED ON SIDES AND COORDINATED WITH EXISTING AND NEW UNDERGROUND UTILITIES AND GRADE BEAMS SLEEVE GRADE BEAMS AS REQUIRED

DUCTBANK SECTION 5 EL900 EL906
NTS

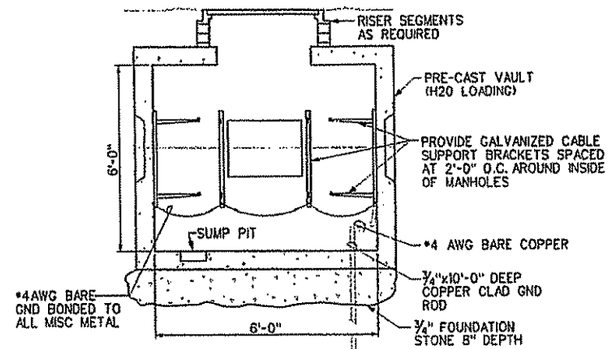

END VIEW

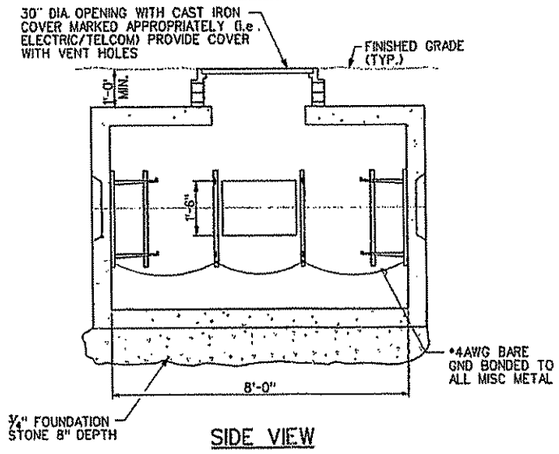

SIDE VIEW

PRE-CAST COMMUNICATIONS MANHOLE DETAILS 3 EL900
NTS

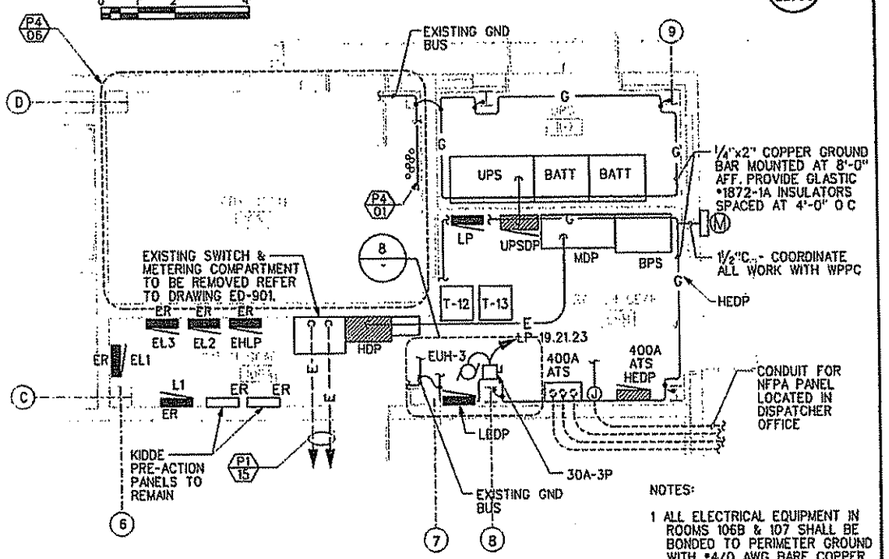

P1 D1 PARTIAL PLAN 1 EL901
0 1' 2' 4' 8'

NOTES:

1 ALL ELECTRICAL EQUIPMENT IN ROOMS 106B & 107 SHALL BE BONDED TO PERIMETER GROUND WITH *4/0 AWG BARE COPPER UTILIZING COMPRESSION LUGS AND BRONZE BOLTS AND HEX NUTS

2. REFER TO DRAWING ED901 FOR ADDITIONAL INFORMATION

3 REFER TO DRAWINGS PH901 THRU PH910 FOR LIMITS OF CONSTRUCTION BY PHASE.

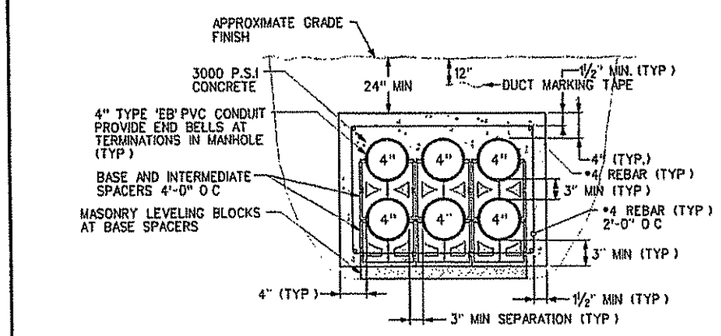

NOTE: ALL CONCRETE ENCASED DUCT BANKS SHALL BE FORMED ON SIDES AND COORDINATED WITH EXISTING AND NEW UNDERGROUND UTILITIES AND GRADE BEAMS SLEEVE GRADE BEAMS AS REQUIRED

DUCTBANK SECTION 4 EL900
NTS

DWG. NO.	DESCRIPTION	NO.	DATE	DESCRIPTION
REFERENCE		REVISIONS		

THE PREPARATION OF THIS DRAWING HAS BEEN FINANCED, IN PART, THROUGH A GRANT FROM THE U.S. DEPARTMENT OF TRANSPORTATION, FEDERAL TRANSIT ADMINSTRATION ACT OF 1964, AS AMENDED

COMMONWEALTH OF PENNSYLVANIA REGISTERED PROFESSIONAL LAWRENCE M. MOREHOUSE ENGINEER

SUBMITTED 5/14/99 DATE

GAEC DE LEUW, CATHER/URS GREINER/CDM A JOINT VENTURE
APPROVED 5/14/99 DATE

DESIGNED	RMA/LMM
DRAWN	JGR
CHECKED	LMM
IN CHARGE	LMM
DATE	MAY 19, 1999
SCALE	AS NOTED

PORT AUTHORITY OF ALLEGHENY COUNTY
PITTSBURGH PENNSYLVANIA

STAGE II LIGHT RAIL TRANSIT SYSTEM

OPERATIONS CONTROL CENTER FACILITY
ENLARGED PLANS & DETAILS

CONTRACT NO. LRS-98-02-E
DWG. NO. EL905 SHT. 90

$USERNAME$ $TIME$ $DATE$ $FILE$

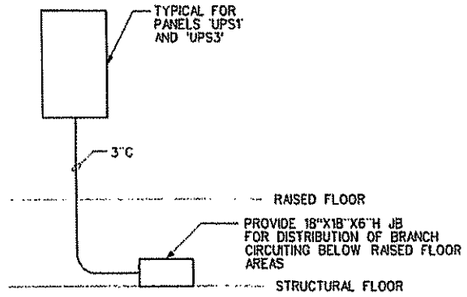

UNDER FLOOR BRANCH CIRCUIT DISTRIBUTION SCHEME (7)

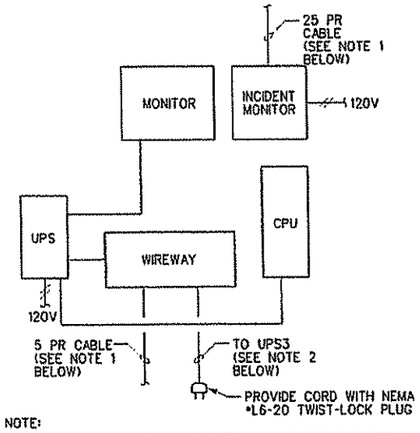

NOTE:

1 EXTEND EXISTING SIGNAL CABLES FROM EXISTING ROADWAY CONSOLE LOCATIONS

2 UTILIZE POWER CIRCUITS DESIGNATED FOR RAIL CONSOLES IN PANEL UPS3 FOR TEMPORARY POWER TO ROADWAY CONSOLES WHILE BUS OPERATIONS IS BEING RE-MODELED

3 REFER TO DETAIL 5/EL906 FOR ADDITIONAL INFORMATION

(P2/15) ROADWAY DISPATCH CONSOLE BLOCK DIAGRAM (TYP OF 6) (6)

RAISED FLOOR AND GENERAL GROUNDING SYSTEM NOTES

A PROVIDE AN INTERIOR GROUND SYSTEM (#2 AWG, 7 STRAND, ANNEALED COPPER CONDUCTOR) CONNECTING THE FRAME WORK OF ALL SYSTEMS EQUIPMENT IN RAIL OPS, PROJECTION ROOM, COMPUTER ROOM, GROUND LEVEL COMMUNICATIONS ROOM AND THIRD FLOOR TRAINING ROOM. SUPPORT WITH 3" INSULATED STAND-OFFS AT 3'-0" INTERVALS BELOW RAISED FLOOR AND IN CEILING SPACES MINIMUM BENDING RADIUS = 12"

B BOND INTERIOR GROUND SYSTEM TO SERVICE GROUND ONLY TAKING CARE TO AVOID GROUND LOOPS

C BOND EVERY OTHER FLOOR PEDESTRAL WITH #6 AWG (7 STRAND, ANNEALED COPPER CONDUCTOR) BONDING JUMPERS LOOP FROM PEDESTAL TO PEDESTAL & CONNECT TO INTERIOR GROUND SYSTEM AT ONE (1) POINT ONLY

D ALL CONNECTIONS OF BONDING JUMPERS TO INTERIOR GROUND SYSTEM & PEDESTALS SHALL BE MADE WITH APPROVED MECHANICAL GROUNDING CLAMPS

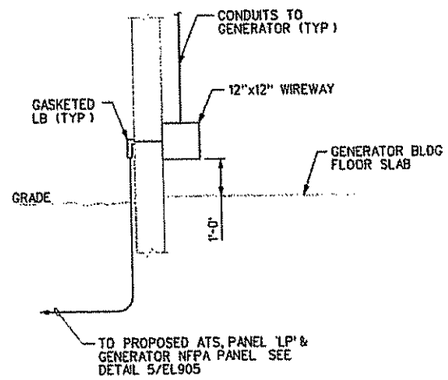

PARTIAL SECTION (2)

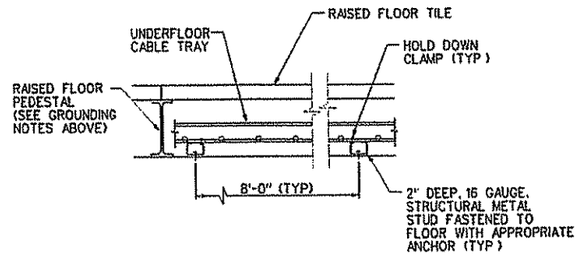

RAISED FLOOR AND UNDER FLOOR CABLE TRAY SECTION DETAIL (4) EL902

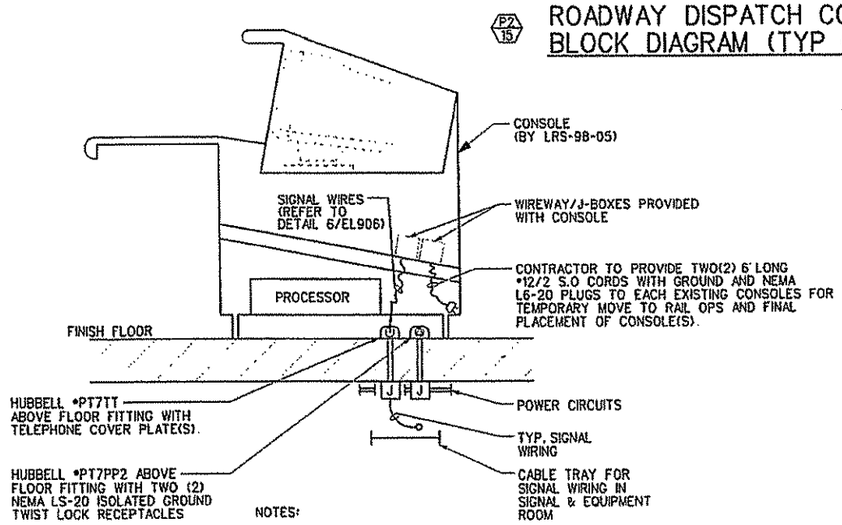

NOTES:

1 EXISTING CONSOLES TO BE TEMPORARY RELOCATED DURING PHASE 1 AND RE-INSTALLED PER THIS DETAIL AFTER AREA IS RE-MODELED

2 REFER TO DETAIL 6/EL906 FOR ADDITIONAL INFORMATION

TYPICAL ROADWAY DISPATCH CONSOLE WIRING DETAIL (5) EL902

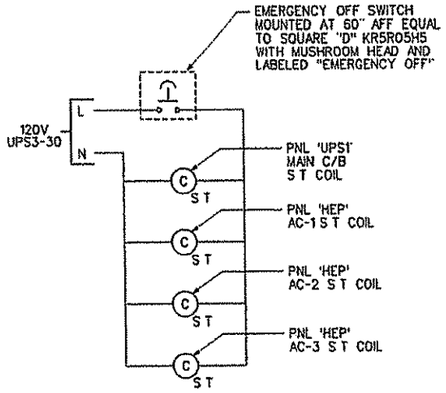

NOTE:
ALL WIRING TO BE #12AWG IN 3/4" C

COMPUTER ROOM POWER AND A/C EMERG. SHUT-OFF CIRCUIT (3) EL902

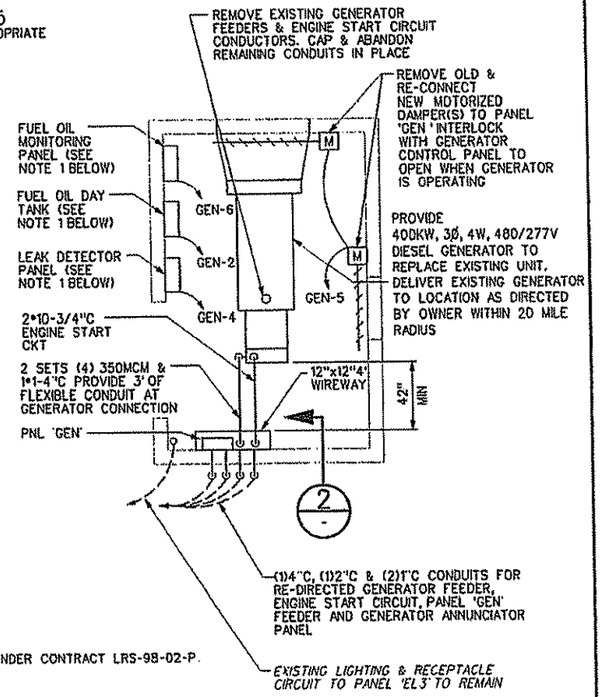

NOTE:

1 PROVIDED UNDER CONTRACT LRS-98-02-P.

(P1/01) EXISTING GENERATOR BUILDING MODIFICATIONS (1) EL900

DWG. NO	DESCRIPTION	NO.	DATE	DESCRIPTION
REFERENCE		REVISIONS		

THE PREPARATION OF THIS DRAWING HAS BEEN FINANCED, IN PART, THROUGH A GRANT FROM THE U.S DEPARTMENT OF TRANSPORTATION, FEDERAL TRANSIT ADMINISTRATION ACT OF 1964, AS AMENDED

COMMONWEALTH OF PENNSYLVANIA — PROFESSIONAL ENGINEER — LAWRENCE M. MORENDUST

SUBMITTED 5/14/99 DATE

GAEC
DE LEUW, CATHER/URS GREINER/CDM
A JOINT VENTURE
APPROVED 5/17/99 DATE

DESIGNED	RMA/LMM
DRAWN	JGR
CHECKED	LMM
IN CHARGE	LMM
DATE	MAY 19, 1999
SCALE	NTS

PORT AUTHORITY OF ALLEGHENY COUNTY
PITTSBURGH PENNSYLVANIA

STAGE II LIGHT RAIL TRANSIT SYSTEM
OPERATIONS CONTROL CENTER FACILITY
ENLARGED PLANS & DETAILS

CONTRACT NO. LRS-98-02-E
DWG. NO. EL906 SHT. 91

$DATE$ $TIME$ $USERNAME$ $FILE$

ONE-LINE RISER DIAGRAM NOTES ⑩ (P1/01)

1 (5) SETS OF (4) #400 MCM. 4"C PLUS (1) SPARE 4"C

2 (2) SETS OF (4) #500 MCM& (1) #1. 4"C

3 2 SETS (4) #350 MCM. (1) #1G. 4"C

4 30A-3P NON FUSED DISCONNECT SWITCH. PROVIDE LOAD SIDE CONNECTION FROM DISCONNECT TO UNIT

5 (3) #3. (1) #8 G - 1¼"C

6 2#10. 1"C FOR START CIRCUIT

7 ONE (1) 1" CONDUIT AND WIRING AS REQUIRED BY GENERATOR SUPPLIER. EXTEND TO DISPATCH ROOM ON GROUND FLOOR FOR GENERATOR REMOTE ANNUNCIATOR PANEL

8 60A-3P NON FUSED DISCONNECT SWITCH PROVIDE LOAD SIDE CONNECTION FROM DISCONNECT TO UNIT

9 1" GRC (EMPTY) FOR CONTROL WIRING TO RESPECTIVE AC UNIT (WIRING FURNISHED UNDER DIVISION 15)

10 FEEDER TO PANEL 'GEN'

11 REFER TO PANEL SCHEDULES FOR FEEDER AND BRANCH CIRCUITING WHERE NOT SHOWN ON THIS DIAGRAM

12 REMOVE ALL CONDUIT AND WIRING TO AND FROM EQUIPMENT BEING REMOVED

13 (4) #1/0, (1)#6G-2"C

14 600A AUTOMATIC TRANSFER SWITCH

15 MAIN GROUNDING ELECTRODE - 1 #3/0 AWG. CONNECT TO WATER SERVICE AND BUILDING STEEL AS REQUIRED BY CODE

16 HVAC EQUIPMENT PROVIDED UNDER CONTRACT LRS-98-02-H

TRANSFORMER SCHEDULE

XFMR	DESCRIPTION	VOLTAGE PRI	VOLTAGE SEC	COMMENTS
T1	EXIST 45 KVA TRANSFORMER TO REMAIN	480V	120/208V	-
T2	EXIST 15 KVA TRANSFORMER TO REMAIN	480V	120/208V	-
T3	EXIST 3 KVA TRANSFORMER TO REMAIN	480V	120/208V	-
T4	EXIST 3 KVA ATTIC LIGHT BLDG	480V	120/208V	-
T-10	EXIST 500 KVA UTILITY TRANSFORMER TO BE REMOVED	13.8 KV	480/277V	-
T-11	UTILITY PAD MOUNTED TRANSFORMER	13.8 KV	480/277V	-
T-12	45KVA	480V	120/208V	FLOOR MOUNTED
T-13	30KVA	480V	120/208V	WALL MOUNTED OVER T-12
T-14	EXIST 37.5 KVA XFMR TO BE REMOVED	480V	120/208V	PHASE 4, N.I.C.
T-15	EXIST 50 KVA XFMR TO BE REMOVED	480V	120/208V	PHASE 4, N.I.C.

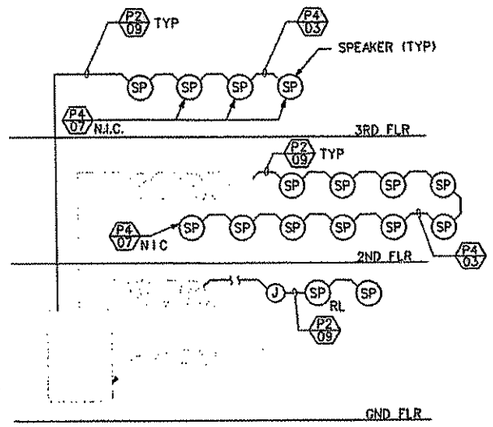

DRAWING NOTES

1 REFER TO DRAWING ED905 FOR PHASING AND DEMOLITION NOTES

2 REFER TO DRAWING EL911 FOR PHASING NOTES

PAGING SYSTEM RISER DIAGRAM (2)

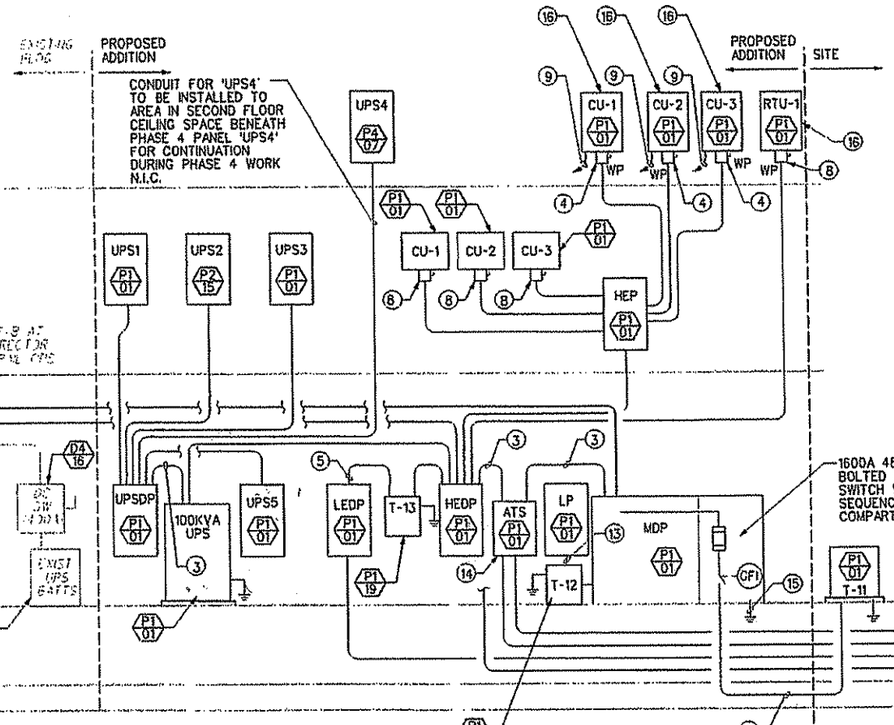

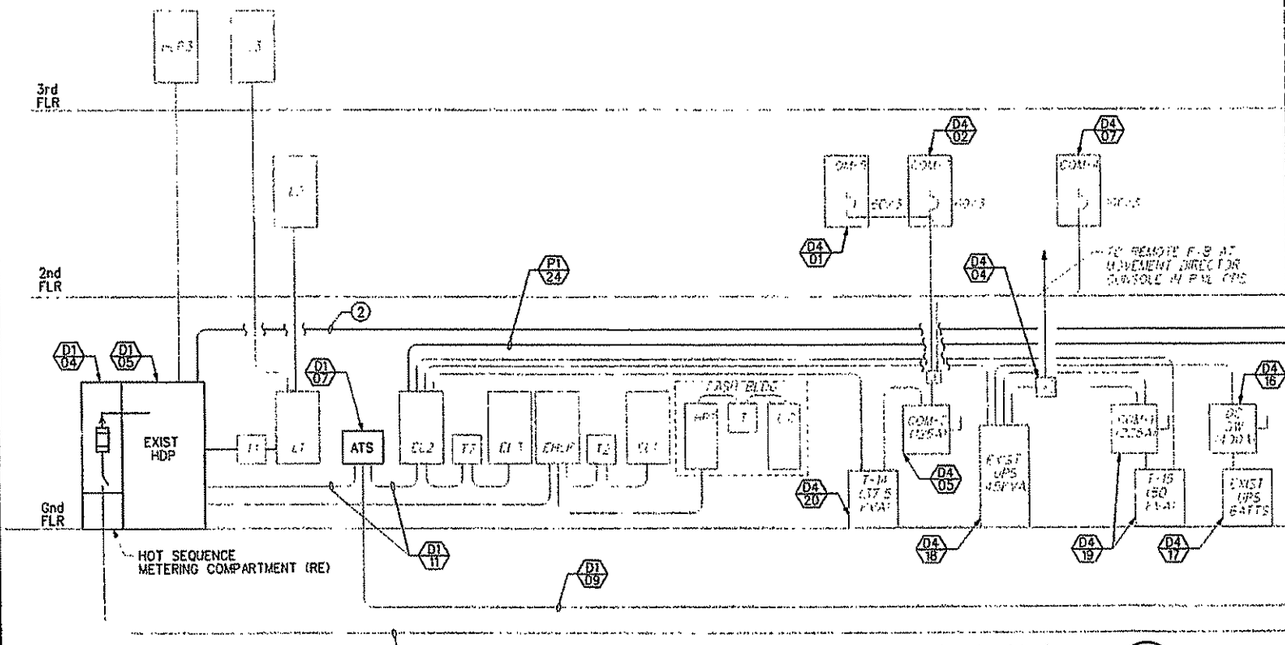

POWER ONE-LINE DIAGRAM ⑪ (1)

DWG. NO	DESCRIPTION	NO.	DATE	DESCRIPTION
REFERENCE		REVISIONS		

THE PREPARATION OF THIS DRAWING HAS BEEN FINANCED, IN PART, THROUGH A GRANT FROM THE U.S. DEPARTMENT OF TRANSPORTATION, FEDERAL TRANSIT ADMINISTRATION ACT OF 1964, AS AMENDED

COMMONWEALTH OF PENNSYLVANIA PROFESSIONAL ENGINEER LAWRENCE M. MOREHOUSE

SUBMITTED 5/14/99 DATE

GAEC DE LEUW, CATHER/URS GREINER/CDM A JOINT VENTURE APPROVED DATE

DESIGNED	RMA/LMM
DRAWN	MMM
CHECKED	LMM
IN CHARGE	LMM
DATE	MAY 19, 1999
SCALE	NTS

PORT AUTHORITY OF ALLEGHENY COUNTY
PITTSBURGH PENNSYLVANIA

STAGE II LIGHT RAIL TRANSIT SYSTEM

OPERATIONS CONTROL CENTER FACILITY

RISER DIAGRAMS, NOTES AND SCHEDULES

CONTRACT NO. LRS-98-02-E

DWG. NO. EL907 SHT. 92

$USERNAME$ $TIME$ $DATE$ FILE$ $DGN

SCHEDULE OF PANEL 'UPSDP' (RM. 106B)

A.I.C. 14K
SURFACE MTD

208Y/120V-3Ø,4W — 400 MCB — I-LINE

CKT NO	BREAKER TRIP	BREAKER POLES	WIRING NO	WIRING SIZE	WIRING COND	LOAD SERVED	LOAD (KW) ØA	LOAD (KW) ØB	LOAD (KW) ØC	LOAD SERVED	BREAKER TRIP	BREAKER POLES	WIRING NO	WIRING SIZE	WIRING COND	CKT NO
1	200	3	4/1	3/0/6	2 5	PANEL UPS1	13.9			PANEL UPS4	100	3	4/1	3/8	1 25	2
							0.6									
3	-	-	-/-	-/-	-	-		14.2		-	-	-	-/-	-/-	-	4
								1.0								
5	-	-	-/-	-/-	-	-			12.0	-	-	-	-/-	-/-	-	6
									0.5							
7	100	3	4/1	3/8	1 25	PANEL UPS2	3.4			PANEL UPS5 (LOADS SHOWN ARE ALLOWANCES)	100	3	4/1	3/8	1 25	8
							6.0									
9	-	-	-/-	-/-	-	-		4.0			-	-	-/-	-/-	-	10
								6.0								
11	-	-	-/-	-/-	-	-			0.2	-	-	-	-/-	-/-	-	12
									6.0							
13	100	3	4/1	3/8	1 25	PANEL UPS3	9.2			SPACE	-	-	-/-	-/-	-	14
							-									
15	-	-	-/-	-/-	-	-		7.2		SPACE	-	-	-/-	-/-	-	16
								-								
17	-	-	-/-	-/-	-	-			5.2	SPACE	-	-	-/-	-/-	-	18
									-							
						TOTALS	33 1	32 4	23 9							

a - PROVIDE PANEL WITH INSULATED NEUTRAL & GROUND

SCHEDULE OF PANEL 'UPS3' (RM. 208)

A.I.C. 14K
SURFACE MTD

208Y/120V-3Ø,4W — 100A MCB

CKT NO	BREAKER TRIP	BREAKER POLES	WIRING NO.	WIRING SIZE	WIRING COND	LOAD SERVED	LOAD (KW) ØA	LOAD (KW) ØB	LOAD (KW) ØC	LOAD SERVED	BREAKER TRIP	BREAKER POLES	WIRING NO	WIRING SIZE	WIRING COND	CKT NO
1	20	1	2/1	12/12	¾	CLOCK RECEPT - ROOM 208	0.1			PROJECTOR *1 &1A	20	1	2/1	12/12	¾	2
							1.4									
3	20	1	-/-	-/-	-	SPARE		-		PROJECTOR *2 &2A	20	1	2/1	12/12	¾	4
								1.4								
5	20	1	-/-	-/-	-	SPARE			-	PROJECTOR *3 &3A	20	1	2/1	12/12	¾	6
									1.4							
7	20	1	2/1	12/12	¾	SUPERVISOR CONSOLE RM 207	0.5			PROJECTOR *4 &4A	20	1	2/1	12/12	¾	8
							1.4									
9	20	1	2/1	12/12	¾	SUPERVISOR CONSOLE RM 207		0.5		PROJECTOR *5 &5A	20	1	2/1	12/12	¾	10
								1.4								
11	20	1	-/-	-/-	-	SPARE			-	PROJECTOR *6 &6A	20	1	2/1	12/12	¾	12
									1.4							
13	20	1	2/1	12/12	¾	DIRECTOR *1 CONSOLE RM 207	0.5			PROJECTOR *7 &7A	20	1	2/1	12/12	¾	14
							1.4									
15	20	1	2/1	12/12	¾	DIRECTOR *1 CONSOLE RM 207		0.5		PROJECTOR *8 &8A	20	1	2/1	12/12	¾	16
								1.4								
17	20	1	-/-	-/-	-	SPARE			-	PROJECTOR *9 &9A	20	1	2/1	12/12	¾	18
									1.4							
19	20	1	2/1	12/12	¾	MANAGER OFFICE CONSOLE RM 232				PROJECTOR *10 &10A	20	1	2/1	12/12	¾	20
							1.4									
21	20	1	2/1	12/12	¾	SPARE				OPTIONAL CONSOLE *2 ROOM 207	20	1	2/1	12/12	¾	22
								0.5								
23	20	1	-/-	-/-	-	SPARE			-	OPTIONAL CONSOLE *2 ROOM 207	20	1	2/1	12/12	¾	24
									0.5							
25	20	1	2/1	12/12	¾	OPTIONAL CONSOLE *1 RM 207	0.5			OPTIONAL CONSOLE *3 ROOM 207	20	1	2/1	12/12	¾	26
							0.5									
27	20	1	2/1	12/12	¾	OPTIONAL CONSOLE *1 RM 207		0.5		OPTIONAL CONSOLE *3 ROOM 207	20	1	2/1	12/12	¾	28
								0.5								
29	20	1	-/-	-/-	-	SPARE			-	UPS1 MCB. AC1, AC2 & AC3 S.T. COILS	20	1	2/1	12/12	¾	30
									-							
31	20	1	2/1	12/12	¾	NETWORK PRINTER *1	0.5			SPARE	20	1	-/-	-/-	-	32
33	20	1	2/1	12/12	¾	NETWORK PRINTER *2		0.5		SPARE	20	1	-/-	-/-	-	34
35	20	1	2/1	12/12	¾	NETWORK PRINTER *3			0.5	SPARE	20	1	-/-	-/-	-	36
									-							
37	20	1	2/1	12/12	¾	NETWORK COLOR PRINTER	0.5			SPARE	20	1	-/-	-/-	-	38
39	20	1	-/-	-/-	-	SPARE				SPARE	20	1	-/-	-/-	-	40
41	20	1	-/-	-/-	-	SPARE				SPARE	20	1	-/-	-/-	-	42
						TOTALS	9 2	7 2	5 2							

1. REFER TO DETAIL 8/EL906 FOR BRANCH CIRCUITING OF UNDER FLOOR RECEPTACLES
a - PROVIDE PANEL WITH INSULATED NEUTRAL & GROUND

SCHEDULE OF PANEL 'UPS1' (RM. 206)

A.I.C. 14K
FLUSH MTD

208Y/120V-3Ø,4W — 200A MCB (SHUNT TRIP-120V)

CKT NO	BREAKER TRIP	BREAKER POLES	WIRING NO	WIRING SIZE	WIRING COND	LOAD SERVED	LOAD (KW) ØA	LOAD (KW) ØB	LOAD (KW) ØC	LOAD SERVED	BREAKER TRIP	BREAKER POLES	WIRING NO	WIRING SIZE	WIRING COND	CKT NO
1	20	1	2/1	12/12	¾	RECEPTACLES - ROOM 208	1.2			WATER ALERT	20	1	2/1	12/12	¾	2
							0.1									
3	20	1	2/1	12/12	¾	RECEPTACLES - ROOM 208		1.2		COMPU. RACK	20	1	2/1	12/12	¾	4
								-								
5	20	1	2/1	12/12	¾	RECEPTACLES - ROOM 206			1.2	COMPU. RACK	20	1	2/1	12/12	¾	6
									1.2							
7	20	1	2/1	12/12	¾	RECEPTACLES - ROOM 206	0.6			COMPU. RACK	20	1	2/1	12/12	¾	8
							1.2									
9	20	1	2/1	12/12	¾	RECEPTACLES - ROOMS 205 & 206		1.0		COMPU. RACK	20	1	2/1	12/12	¾	10
								1.2								
11	20	1	-/-	-/-	-	SPARE			-	COMPU. RACK	20	1	2/1	12/12	¾	12
									1.2							
13	20	1	2/1	12/12	¾	COMPU. RACK	1.2			COMPU. RACK	20	1	2/1	12/12	¾	14
							1.2									
15	20	1	2/1	12/12	¾	COMPU. RACK		1.2		COMPU. RACK	20	1	2/1	12/12	¾	16
								1.2								
17	20	1	2/1	12/12	¾	COMPU. RACK			1.2	COMPU. RACK	20	1	2/1	12/12	¾	18
									1.2							
19	20	1	2/1	12/12	¾	COMPU. RACK	1.2			COMPU. RACK	20	1	2/1	12/12	¾	20
							1.2									
21	20	1	2/1	12/12	¾	COMPU. RACK		1.2		COMPU. RACK	20	1	2/1	12/12	¾	22
								1.2								
23	20	1	2/1	12/12	¾	COMPU. RACK			1.2	COMPU. RACK	20	1	2/1	12/12	¾	24
									1.2							
25	20	1	2/1	12/12	¾	COMPU. RACK	1.2			COMPU. RACK	20	1	2/1	12/12	¾	26
							1.2									
27	20	1	2/1	12/12	¾	COMPU. RACK		1.2		COMPU. RACK	20	1	2/1	12/12	¾	28
								1.2								
29	20	1	2/1	12/12	¾	COMPU. RACK			1.2	COMPU. RACK	20	1	2/1	12/12	¾	30
									1.2							
31	20	1	2/1	12/12	¾	COMPU. RACK	1.2			COMPU. RACK	20	1	2/1	12/12	¾	32
							1.2									
33	20	1	2/1	12/12	¾	COMPU. RACK		1.2		COMPU. RACK	20	1	2/1	12/12	¾	34
								1.2								
35	20	1	2/1	12/12	¾	COMPU. RACK			1.2	SPARE	20	1	-/-	-/-	-	36
									-							
37	20	1	2/1	12/12	¾	COMPU. RACK	1.2			SPARE	20	1	-/-	-/-	-	38
							-									
39	20	1	2/1	12/12	¾	COMPU. RACK		1.2		SPARE	20	1	-/-	-/-	-	40
								-								
41	20	1	-/-	-/-	-	SPARE			-	SPARE	20	1	-/-	-/-	-	42
									-							
						TOTALS	13 9	14 2	12 0							

1 REFER TO DETAIL 8/EL906 FOR BRANCH CIRCUITING OF UNDER FLOOR RECEPTACLES
a - PROVIDE PANEL WITH INSULATED NEUTRAL & GROUND

(P4 07) SCHEDULE OF PANEL 'UPS4' (RM. 303) (N.I.C.)

A.I.C. 14K
FLUSH MTD

208Y/120V-3Ø,4W — 100A MCB

CKT NO.	BREAKER TRIP	BREAKER POLES	WIRING NO	WIRING SIZE	WIRING COND	LOAD SERVED	LOAD (KW) ØA	LOAD (KW) ØB	LOAD (KW) ØC	LOAD SERVED	BREAKER TRIP	BREAKER POLES	WIRING NO	WIRING SIZE	WIRING COND	CKT NO
1	20	1	2/1	12/12	b	SUPPORT CONSOLE ROOM 303	0.5			CLOCK RECEPT. ROOM 209	20	1	2/1	12/12	¾	2
							0.1									
3	20	1	2/1	12/12	b	SUPPORT CONSOLE ROOM 303		0.5		ADMIN. CONSOLE ROOM 303	20	1	2/1	12/12	¾	4
								0.5								
5	20	-	-/-	-/-	-	SPARE			0.5	ADMIN. CONSOLE ROOM 303	20	1	2/1	12/12	¾	6
7	20	-	-/-	-/-	-	SPARE	-			SPARE	20	1	-/-	-/-	-	8
9	20	-	-/-	-/-	-	SPARE		-		SPARE	20	1	-/-	-/-	-	10
11	20	-	-/-	-/-	-	SPARE			-	SPARE	20	1	-/-	-/-	-	12
13	-	-	-/-	-/-	-	SPACE	-			SPACE	-	-	-/-	-/-	-	14
15	-	-	-/-	-/-	-	SPACE		-		SPACE	-	-	-/-	-/-	-	16
17	-	-	-/-	-/-	-	SPACE			-	SPACE	-	-	-/-	-/-	-	18
						TOTALS	0 6	1 0	0 5							

a - PROVIDE PANEL WITH INSULATED NEUTRAL & GROUND.
b - CIRCUIT RUN IN COMMON 1" CONDUIT TO IDENTIFIED CONSOLE.

SCHEDULE OF PANEL 'UPS2' (RM. 209)

A.I.C. 14K
FLUSH MTD

208Y/120V-3Ø,4W — 100A MCB

CKT NO	BREAKER TRIP	BREAKER POLES	WIRING NO	WIRING SIZE	WIRING COND	LOAD SERVED	LOAD (KW) ØA	LOAD (KW) ØB	LOAD (KW) ØC	LOAD SERVED	BREAKER TRIP	BREAKER POLES	WIRING NO	WIRING SIZE	WIRING COND	CKT NO
1	20	1	2/1	12/12	b	CONSOLE *1 - ROOM 209	0.5			CONSOLE *4 - ROOM 209	20	1	2/1	12/12	b	2
							0.5									
3	20	1	2/1	12/12	b	CONSOLE *1 - ROOM 209		0.5		CONSOLE *4 - ROOM 209	20	1	2/1	12/12	b	4
								0.5								
5	20	1	-/-	-/-	-	SPARE			-	SPARE	20	1	-/-	-/-	-	6
									-							
7	20	1	2/1	12/12	b	CONSOLE *2 - ROOM 209	0.5			CONSOLE *5 - ROOM 209	20	1	2/1	12/12	b	8
							0.5									
9	20	1	2/1	12/12	b	CONSOLE *2 - ROOM 209		0.5		CONSOLE *5 - ROOM 209	20	1	2/1	12/12	b	10
								0.5								
11	20	1	-/-	-/-	-	SPARE			-	SPARE	20	1	-/-	-/-	-	12
									-							
13	20	1	2/1	12/12	b	CONSOLE *3 - ROOM 209	0.5			CONSOLE *6 - ROOM 209	20	1	2/1	12/12	b	14
							0.5									
15	20	1	2/1	12/12	b	CONSOLE *3 - ROOM 209		0.5		CONSOLE *6 - ROOM 209	20	1	2/1	12/12	b	16
								0.5								
17	20	1	-/-	-/-	-	SPARE			-	SPARE	20	1	-/-	-/-	-	18
									-							
19	20	1	2/1	12/12	¾	RECEPTACLE - ROOM 209	0.2			EXIST. CCTV RECORDER CONSOLE	20	1	2/1	12/12	b	20
							0.2									
21	20	1	2/1	12/12	¾	EXIST. CCTV CAMERAS		0.5		EXIST. TELEHONE COMPUTER (PBX)	20	1	2/1	12/12	b	22
								0.5								
23	20	1	2/1	12/12	¾	EXIST. DICTAPHONE			0.2	SPARE	20	1	-/-	-/-	-	24
									0.2							
25	20	1	-/-	-/-	-	SPARE	-			SPARE	20	1	-/-	-/-	-	26
							-									
27	20	1	-/-	-/-	-	SPARE		-		SPARE	20	1	-/-	-/-	-	28
								-								
29	20	1	-/-	-/-	-	SPARE			-	SPARE	20	1	-/-	-/-	-	30
									-							
						TOTALS	3 4	4 0	0 2							

b - CIRCUIT RUN IN COMMON 1" CONDUIT TO IDENTIFIED CONSOLE
a - PROVIDE PANEL WITH INSULATED NEUTRAL & GROUND

SCHEDULE OF PANEL 'UPS5' (RM. 108A)

A.I.C. 14K
SURFACE MTD

208Y/120V-3Ø,4W — 100A MCB

CKT NO	BREAKER TRIP	BREAKER POLES	WIRING NO.	WIRING SIZE	WIRING COND	LOAD SERVED	LOAD (KW) ØA	LOAD (KW) ØB	LOAD (KW) ØC	LOAD SERVED	BREAKER TRIP	BREAKER POLES	WIRING NO	WIRING SIZE	WIRING COND	CKT NO
1	20	1	2/1	12/12	¾	DISPATCHER WATER ALERT ANNUN.	0.1			EXIST. P.A. CABINET AND PANELS	20	1	2/1	12/12	¾	2
							0.2									
3	20	1	2/1	12/12	¾	GENERATOR REMOTE ANNUN.		0.1		SPARE	20	1	-/-	-/-	-	4
								-								
5	20	1	-/-	-/-	-	SPARE			-	SPARE	20	1	-/-	-/-	-	6
									-							
7	20	1	-/-	-/-	-	SPARE	-			SPARE	20	1	-/-	-/-	-	8
							-									
9	20	1	-/-	-/-	-	SPARE		-		SPARE	20	1	-/-	-/-	-	10
								-								
11	20	1	-/-	-/-	-	SPARE			-	SPARE	20	1	-/-	-/-	-	12
									-							
13	20	1	-/-	-/-	-	SPARE	-			SPARE	20	1	-/-	-/-	-	14
							-									
15	-	-	-/-	-/-	-	SPACE		-		SPACE	-	-	-/-	-/-	-	16
								-								
17	-	-	-/-	-/-	-	SPACE			-	SPACE	-	-	-/-	-/-	-	18
									-							
19	-	-	-/-	-/-	-	SPACE	-			SPACE	-	-	-/-	-/-	-	20
							-									
21	-	-	-/-	-/-	-	SPACE		-		SPACE	-	-	-/-	-/-	-	22
								-								
23	-	-	-/-	-/-	-	SPACE			-	SPACE	-	-	-/-	-/-	-	24
									-							
25	-	-	-/-	-/-	-	SPACE	-			SPACE	-	-	-/-	-/-	-	26
							-									
27	-	-	-/-	-/-	-	SPACE		-		SPACE	-	-	-/-	-/-	-	28
								-								
29	-	-	-/-	-/-	-	SPACE			-	SPACE	-	-	-/-	-/-	-	30
									-							
						TOTALS	0 3	0.1	0 0							

a - PROVIDE PANEL WITH INSULATED NEUTRAL & GROUND

DWG NO	DESCRIPTION	NO.	DATE	DESCRIPTION
	REFERENCE			REVISIONS

THE PREPARATION OF THIS DRAWING HAS BEEN FINANCED, IN PART, THROUGH A GRANT FROM THE U.S. DEPARTMENT OF TRANSPORTATION, FEDERAL TRANSIT ADMINSTRATION ACT OF 1964, AS AMENDED

COMMONWEALTH OF PENNSYLVANIA — REGISTERED PROFESSIONAL ENGINEER — LAWRENCE M. MORONSKI

SUBMITTED 6/14/99 DATE

GAEC
DE LEUW, CATHER/URS GREINER/CDM
A JOINT VENTURE
APPROVED DATE

DESIGNED	RMA/LMM
DRAWN	MMM
CHECKED	LMM
IN CHARGE	LMM
DATE	MAY 19, 1999
SCALE	NONE

PORT AUTHORITY OF ALLEGHENY COUNTY
PITTSBURGH PENNSYLVANIA

STAGE II LIGHT RAIL TRANSIT SYSTEM
OPERATIONS CONTROL CENTER FACILITY
PANELBOARD SCHEDULES

CONTRACT NO. LRS-98-02-E
DWG. NO. EL908 SHT. 93

$USERNAME$ $TIME$ $DATE$ $FILE$

SCHEDULE OF PANEL 'HEP' (COR. 204)

A.I.C. 22K FLUSH. MTD

480Y/277V-3Ø,4W — 200A MCB

CKT NO	BREAKER TRIP	BREAKER POLES	WIRING NO	WIRING SIZE	WIRING COND	LOAD SERVED	LOAD (KW) ØA	LOAD (KW) ØB	LOAD (KW) ØC	LOAD SERVED	BREAKER TRIP	BREAKER POLES	WIRING NO	WIRING SIZE	WIRING COND	CKT NO
1	20	1	2/1	12/12	¾	LIGHTS 1st FLOOR	0.9			LIGHTS 2nd FLOOR	20	1	2/1	12/12	¾	2
3	20	1	2/1	12/12	¾	LIGHTS 1st FLOOR	1.4			LIGHTS 2nd FLOOR	20	1	2/1	12/12	¾	4
5	20	1	2/1	12/12	¾	LIGHTS 1st FLOOR		0.5		LIGHTS 2nd FLOOR	20	1	2/1	12/12	¾	6
7	20	1	2/1	12/12	¾	LIGHTS 3rd FLOOR		1.6		EXIT SIGNS	20	1	2/1	12/12	¾	8
9	20	1	2/1	12/12	¾	LIGHTS 3rd FLOOR			0.7	SPARE	20	1	-/-	-/-	-	10
11	20	1	2/1	12/12	¾	LIGHTS 3rd FLOOR			1.5	SPARE	20	1	-/-	-/-	-	12
* 13	40	3	3/1	8/10	10	AC-1	0.3			CU-1	20	3	3/1	12/12	¾	14
15	-	-	-/-	-/-	-	-	3.2			-	-	-	-/-	-/-	-	16
17	-	-	-/-	-/-	-	-		9.2		-	-	-	-/-	-/-	-	18
* 19	40	3	3/1	8/10	10	AC-2		3.2		CU-2	20	3	3/1	12/12	¾	20
21	-	-	-/-	-/-	-	-			9.2	-	-	-	-/-	-/-	-	22
23	-	-	-/-	-/-	-	-			3.2	-	-	-	-/-	-/-	-	24
* 25	40	3	3/1	8/10	10	AC-3 (REDUNDANT)	-			CU-3	20	3	3/1	12/12	¾	26
27	-	-	-/-	-/-	-	-	-			-	-	-	-/-	-/-	-	28
29	-	-	-/-	-/-	-	-		-		-	-	-	-/-	-/-	-	30
31	20	1	-/-	-/-	-	SPARE			-	SPARE	20	1	-/-	-/-	-	32
33	20	1	-/-	-/-	-	SPARE				SPARE	20	1	-/-	-/-	-	34
35	20	1	-/-	-/-	-	SPARE				SPARE	20	1	-/-	-/-	-	36
37	-	-	-/-	-/-	-	SPACE				SPACE	-	-	-/-	-/-	-	38
39	-	-	-/-	-/-	-	SPACE				SPACE	-	-	-/-	-/-	-	40
41	-	-	-/-	-/-	-	SPACE				SPACE	-	-	-/-	-/-	-	42
						TOTALS	28 0	27 9	27 9							

* ONLY TWO (2) OF THE THREE (3) AC/CU UNITS WILL OPERATE CONCURRENTLY AC-1, AC-2 & AC-3 C/B'S TO BE SHUNT-TRIP (120V COIL).

SCHEDULE OF PANEL 'GEN' (GENERATOR BUILDING)

A.I.C. 10K SURFACE MTD

120Y/208V-3Ø,4W — 40A MCB

CKT NO.	BREAKER TRIP	BREAKER POLES	WIRING NO.	WIRING SIZE	WIRING COND	LOAD SERVED	LOAD (KW) ØA	LOAD (KW) ØB	LOAD (KW) ØC	LOAD SERVED	BREAKER TRIP	BREAKER POLES	WIRING NO	WIRING SIZE	WIRING COND	CKT NO
1	20	2	2/1	12/12	¾	GEN. BLOCK HEATER	1.3			FUEL OIL DAY TANK	20	1	2/1	12/12	¾	2
3	-	-	-/-	-/-	-	-	0.9			LEAK DET. PANEL	20	1	2/1	12/12	¾	4
5	20	1	2/1	12/12	¾	INTAKE/EXH DAMPER		1.3		FUEL OIL MONITOR PANEL	20	1	2/1	12/12	¾	6
7	20	1	-/-	-/-	-	SPARE		0.1		SPARE	20	1	-/-	-/-	-	8
9	-	-	-/-	-/-	-	SPACE			0.2	SPACE	-	-	-/-	-/-	-	10
11	-	-	-/-	-/-	-	SPACE			0.1	SPACE	-	-	-/-	-/-	-	12
						TOTALS	2 2	1 4	0 3							

SCHEDULE OF PANEL 'LP' (RM. 106B)

A.I.C. 14K SURFACE MTD

120Y/208V-3Ø,4W — 150A MCB

CKT NO	BREAKER TRIP	BREAKER POLES	WIRING NO	WIRING SIZE	WIRING COND	LOAD SERVED	LOAD (KW) ØA	LOAD (KW) ØB	LOAD (KW) ØC	LOAD SERVED	BREAKER TRIP	BREAKER POLES	WIRING NO	WIRING SIZE	WIRING COND	CKT NO
1	20	1	2/1	12/12	¾	RECEPTACLES - ROOM 208	0.4			INSTANT WATER HEATER (DIV. 15)	30	2	2/1	8/10	10	2
3	20	1	2/1	12/12	¾	RECEPTACLES - ROOM 207	3.0			-	-	-	-/-	-/-	-	4
5	20	1	2/1	12/12	¾	RECEPTACLES - ROOM 208		0.6		EXHAUST FAN-EF-2	20	1	2/1	12/12	3/4-	6
7	20	1	2/1	12/12	¾	CUH-3, 4 AND 5		3.0		SPARE	20	1	-/-	-/-	-	8
9	20	-	-/-	-/-	-	SPARE	0.9			SPARE	20	1	-/-	-/-	-	10
11	20	1	2/1	12/12	¾	EXHAUST FAN-EF-3		-		SPARE	20	1	/	/		12
13	20	3	3/1	12/12	¾	EUH-1			0.7	EUH-2	20	3	3/1	12/12	¾	14
15	-	-	-/-	-/-	-	-	1.2			-	-	-	-/-	-/-	-	16
17	-	-	-/-	-/-	-	-	1.2			-	-	-	-/-	-/-	-	18
19	20	3	3/1	12/12	¾	EUH-3		1.2		SPARE	20	1	-/-	-/-	-	20
21	-	-	-/-	-/-	-	-	0.4			SPARE	20	1	-/-	-/-	-	22
23	-	-	-/-	-/-	-	-		1.2		SPARE	20	1	-/-	-/-	-	24
25	20	1	-/-	-/-	-	SPARE		0.4		EXIST. A/C UNIT ROOM 224	20	1	2/1	12/12	¾	26
27	20	1	-/-	-/-	-	SPARE	1.5			SPARE	20	1	-/-	-/-	-	28
29	-	-	-/-	-/-	-	SPARE		-		-	-	-	-/-	-/-	-	30
31	-	-	-/-	-/-	-	SPACE			-	-	-	-	-/-	-/-	-	32
33	-	-	-/-	-/-	-	SPACE				SPACE	-	-	-/-	-/-	-	34
35	-	-	-/-	-/-	-	SPACE				SPACE	-	-	-/-	-/-	-	36
						TOTALS	9 8	7 6	5 8							

SCHEDULE OF 'MDP' (RM. 106B)

A.I.C. 35K SURFACE MTD

480Y/277V-3Ø,4W — 1600A MLO SQ.D I-LINE (OR EQUAL)

CKT NO	BREAKER TRIP	BREAKER POLES	WIRING NO	WIRING SIZE	WIRING COND	LOAD SERVED	LOAD (KW) ØA	LOAD (KW) ØB	LOAD (KW) ØC	LOAD SERVED	BREAKER TRIP	BREAKER POLES	WIRING NO	WIRING SIZE	WIRING COND	CKT NO
1	800	3	4/1	500/1/0	2/4"	PANEL 'HDP' (EXG)	170.0			SPARE	100	3	-/-	-/-	-	2
3	-	-	-/-	-/-	-	-		170.0		-	-	-	-/-	-/-	-	4
5	-	-	-/-	-/-	-	-			170.0	-	-	-	-/-	-/-	-	6
7	100	-	-/-	-/-	-	SPARE	-			SPARE	100	3	-/-	-/-	-	8
9	-	-	-/-	-/-	-	-		-		-	-	-	-/-	-/-	-	10
11	-	-	-/-	-/-	-	-			-	-	-	-	-/-	-/-	-	12
13	60	3	3/1	6/10	10	TRANSFORMER 'T-12' TO PANEL 'LP'	12.0			SPARE	100	3	-/-	-/-	-	14
15	-	-	-/-	-/-	-	-		9.0		-	-	-	-/-	-/-	-	16
17	-	-	-/-	-/-	-	-			6.1	-	-	-	-/-	-/-	-	18
19	-	-	-/-	-/-	-	SPACE	-			ATS (PNL 'HEDP')	600	3	-/-	-/-	-	20 *
21	-	-	-/-	-/-	-	SPACE		98.2		-	-	-	-/-	-/-	-	22
23	-	-	-/-	-/-	-	SPACE			97.6	-	-	-	-/-	-/-	-	24
						TOTALS	260.2	276.8	263.4							

* REFER TO RISER DIAGRAM FOR FEEDER SIZES

SCHEDULE OF PANEL 'HEDP' (RM. 106B)

A.I.C. 22K SURFACE MTD

480Y/277V-3Ø,4W — 600A MCB — I-LINE

CKT NO	BREAKER TRIP	BREAKER POLES	WIRING NO	WIRING SIZE	WIRING COND	LOAD SERVED	LOAD (KW) ØA	LOAD (KW) ØB	LOAD (KW) ØC	LOAD SERVED	BREAKER TRIP	BREAKER POLES	WIRING NO	WIRING SIZE	WIRING COND	CKT NO
1	200	3	4/1	3/0/6	2 5	UPS (100 KW)	33.1			PANEL 'HEP'	200	3	4/1	3/0/6	2 5	2
3	-	-	-/-	-/-	-	-	28.0			-	-	-	-/-	-/-	-	4
5	-	-	-/-	-/-	-	-		32.9		-	-	-	-/-	-/-	-	6
7	25	3	3/1	8/10	¾	TRANSFORMER T-13 TO PANEL 'LEDP'		27.9		SPACE	100	-	-/-	-/-	-	8
9	-	-	-/-	-/-	-	-	5.0			-	-	-	-/-	-/-	-	10
11	-	-	-/-	-/-	-	-		-		-	-	-	-/-	-/-	-	12
13	150	3	3/1	1/0/6	2 0	EXISTING PANEL 'EL2'	19.6			RTU-1	50	3	3/1	6/10	10	14
15	-	-	-/-	-/-	-	-	12.5			-	-	-	-/-	-/-	-	16
17	-	-	-/-	-/-	-	-		19.3		-	-	-	-/-	-/-	-	18
19	-	-	-/-	-/-	-	SPACE		12.5		SPACE	-	-	-/-	-/-	-	20
21	-	-	-/-	-/-	-	SPACE			18.0	SPACE	-	-	-/-	-/-	-	22
23	-	-	-/-	-/-	-	SPACE			12.5	SPACE	-	-	-/-	-/-	-	24
						TOTALS	98 2	97 6	87 3							

SCHEDULE OF PANEL 'LEDP' (RM. 106B)

A.I.C. 14K SURFACE MTD

208Y/120V-3Ø,4W — 100A MCB

CKT NO	BREAKER TRIP	BREAKER POLES	WIRING NO.	WIRING SIZE	WIRING COND	LOAD SERVED	LOAD (KW) ØA	LOAD (KW) ØB	LOAD (KW) ØC	LOAD SERVED	BREAKER TRIP	BREAKER POLES	WIRING NO.	WIRING SIZE	WIRING COND	CKT NO
1	20	1	2/1	12/12	¾	RECEPTACLES - ROOMS 105 & 107	0.4			PBX SYSTEM (FUTURE)	20	1	-/-	-/-	-	2
3	20	1	2/1	12/12	¾	RECEPTACLES - ROOMS 108B & 106B	-	0.6		PBX SYSTEM (FUTURE)	20	1	-/-	-/-	-	4
5	20	1	2/1	12/12	¾	RECEPTACLES - ROOM 108B		-	0.4	PBX SYSTEM (FUTURE)	20	1	-/-	-/-	-	6
7	20	1	2/1	12/12	¾	EXHAUST FAN EF-1	0.7			DRY PIPE SPRINKLER PIPE COMPRESSOR	20	3	3/1	12/12	¾	8
9	20	1	-/-	-/-	-	EMERG. LIGHTING	-	0.1		PANEL 'GEN.'	40	3	3/1	6/8	2	10
11	20	1	-/-	-/-	-	SPARE		1.4		-	-	-	-/-	-/-	-	12
13	20	1	-/-	-/-	-	SPARE	-		0.3	-	-	-	-/-	-/-	-	14
15	20	1	-/-	-/-	-	SPARE	2.2			SPARE	20	1	-/-	-/-	-	16
17	-	-	-/-	-/-	-	SPACE		-		SPACE	-	-	-/-	-/-	-	18
19	-	-	-/-	-/-	-	SPACE	-		-	SPACE	-	-	-/-	-/-	-	20
21	-	-	-/-	-/-	-	SPACE		-		SPACE	-	-	-/-	-/-	-	22
23	-	-	-/-	-/-	-	SPACE	-			SPACE	-	-	-/-	-/-	-	24
25	-	-	-/-	-/-	-	SPACE		-		SPACE	-	-	-/-	-/-	-	26
27	-	-	-/-	-/-	-	SPACE	-			SPACE	-	-	-/-	-/-	-	28
29	-	-	-/-	-/-	-	SPACE		-		SPACE	-	-	-/-	-/-	-	30
						TOTALS	3 3	2 1	0 7							

DWG. NO	DESCRIPTION	NO.	DATE	DESCRIPTION
REFERENCE		REVISIONS		

THE PREPARATION OF THIS DRAWING HAS BEEN FINANCED, IN PART, THROUGH A GRANT FROM THE U.S. DEPARTMENT OF TRANSPORTATION, FEDERAL TRANSIT ADMINISTRATION ACT OF 1964, AS AMENDED

COMMONWEALTH OF PENNSYLVANIA — REGISTERED PROFESSIONAL ENGINEER — LAWRENCE A. MOREHOUSE

SUBMITTED — 5/14/99 DATE

GAEC — DE LEUW, CATHER/URS GREINER/CDM A JOINT VENTURE — APPROVED / DATE

DESIGNED	RMA/LMM
DRAWN	MMM
CHECKED	LMM
IN CHARGE	LMM
DATE	MAY 19, 1999
SCALE	NONE

PORT AUTHORITY OF ALLEGHENY COUNTY
PITTSBURGH — PENNSYLVANIA

STAGE II LIGHT RAIL TRANSIT SYSTEM
OPERATIONS CONTROL CENTER FACILITY
PANELBOARD SCHEDULES

CONTRACT NO. LRS-98-02-E
DWG. NO. EL909 SHT. 94

$DATE$ $TIME$ $USERNAME$ $FILE$

SCHEDULE OF EXISTING PANEL 'COM3' (2ND FLOOR STORAGE ROOM)

SURF MTD

120Y/208V-3Ø,4W — 60A MCB

	CKT NO.	BREAKER TRIP	BREAKER POLES	WIRING NO.	WIRING SIZE	WIRING COND	LOAD SERVED	LOAD (KW) ØA	LOAD (KW) ØB	LOAD (KW) ØC	LOAD SERVED	BREAKER TRIP	BREAKER POLES	WIRING NO	WIRING SIZE	WIRING COND	CKT NO	
a	1	15	1	-	-	-	MONITOR RECEIVER	-			YARD RADIO	15	1	-	-	-	2	a
*	3	15	1	-	-	-	PA CABINET AND PANELS		-									
	5	15	1	-	-	-				-	EDC CONSOLE *1	15	1	-	-	-	4	a
							SPARE			-	DISPATCHER CONSOLE *4	15	1	-	-	-	6	a
a	7	15	1	-	-	-	DISPATCHER CONSOLE *3	-			DISPATCHER CONSOLE *2	15	1	-	-	-	8	a
a	9	15	1	-	-	-	DISPATCHER CONSOLE *1		-									
a	11	20	1	-	-	-	EDC CONSOLE *2			-	SPARE	15	1	-	-	-	10	
										-	CTS POWER SUPLY	20	1	-	-	-	12	a
a	13	15	1	-	-	-	SIGNAL	-			SIGNAL	15	1	-	-	-	14	a
a	15	20	1	-	-	-	TRAFFIC RADIO CONTROL STA *3		-									
	17	-	-	-	-	-				-	SPACE	-	-	-	-	-	16	
							SPACE			-	SPACE	-	-	-	-	-	18	
	19	-	-	-	-	-		-										
							SPACE				SPACE	-	-	-	-	-	20	
	21	-	-	-	-	-			-									
							SPACE			-	SPACE	-	-	-	-	-	22	
	23	-	-	-	-	-				-								
							SPACE				SPACE	-	-	-	-	-	24	
	25	-	-	-	-	-		-										
							SPACE				SPACE	-	-	-	-	-	26	
	27	-	-	-	-	-			-									
							SPACE			-	SPACE	-	-	-	-	-	28	
	29	-	-	-	-	-				-								
							SPACE				SPACE	-	-	-	-	-	30	
							TOTALS	-	-	-								

* EXISTING CIRCUIT TO BE RECONNECTED TO NEW UPS SYSTEM PANEL 'UPS2'
a EXISTING CIRCUIT TO BE REMOVED UNDER RENOVATION

SCHEDULE OF EXISTING PANEL 'COM4' (2ND FLOOR COMPUTER ROOM)

FLUSH MTD

120Y/208V-3Ø,4W — 100A MCB

	CKT NO	BREAKER TRIP	BREAKER POLES	WIRING NO.	WIRING SIZE	WIRING COND	LOAD SERVED	LOAD (KW) ØA	LOAD (KW) ØB	LOAD (KW) ØC	LOAD SERVED	BREAKER TRIP	BREAKER POLES	WIRING NO	WIRING SIZE	WIRING COND	CKT NO	
a	1	20	1	-	-	-	SPARE	-			PRINTER COMPUTER	15	1	-	-	-	2	a
a	3	20	1	-	-	-	SUPV. CONSOLE RICS/SACS		-		UPS ALARM SYSTEM	15	1	-	-	-	4	a
a	5	20	1	-	-	-	MOV DIR.CONSOLE RICS/SACS			-	SPARE	15	1	-	-	-	6	
a	7	20	1	-	-	-	SIGNAL CPU *1	-			SIGNAL DISC *1	15	1	-	-	-	8	a
*	9	15	1	-	-	-	CCTV CAMERAS		-		SPARE	15	1	-	-	-	10	
	11	15	1	-	-	-	SPARE			-	TELE. POWER STRIP	20	1	-	-	-	12	a
a	13	15	1	-	-	-	SPARE	-			CPU UNIT *2	20	1	-	-	-	14	a
a	15	15	1	-	-	-	CPU UNIT *1		-		CPU UNIT *2	15	1	-	-	-	16	a
a	17	20	1	-	-	-	CPU UNIT *1			-	TELE KEY SETS	15	1	-	-	-	18	a
a	19	20	1	-	-	-	CTS POWER SUPPLY *2	-			TELE. COMPUTER (PBX)	10	1	-	-	-	20	*
a	21	20	1	-	-	-	SIGNAL I/O *1		-		SIGNAL CKT 1, 2, 3, 4	15	1	-	-	-	22	a
a	23	15	1	-	-	-	SIGNAL PRINTER			-	SPARE	20	1	-	-	-	24	a
	25	-	-	-	-	-	SPACE	-			SPACE	-	-	-	-	-	26	a
	27	-	-	-	-	-	SPACE		-		SIGNAL CPU *2	20	1	-	-	-	28	a
a	29	15	1	-	-	-	SIGNAL DISC *2			-	SIGNAL I/O *2	20	1	-	-	-	30	a
a	31	15	1	-	-	-	CPU *1 RICS/SACS	-			CIU *1	20	1	-	-	-	32	a
a	33	15	1	-	-	-	CPU *2 RICS/SACS		-		R-14	15	1	-	-	-	34	a
a	35	15	1	-	-	-	CIU *2			-	SPARE	15	1	-	-	-	36	a
	37	20	1	-	-	-	SPARE	-			SPARE	15	1	-	-	-	38	a
	39	-	-	-	-	-	SPACE		-		SPACE	-	-	-	-	-	40	a
	41	-	-	-	-	-	SPACE			-	CIR. *5 RECEP SUPV. CONSOLE	20	1	-	-	-	42	a
							TOTALS	-	-	-								

* EXISTING CIRCUIT TO BE RECONNECTED TO NEW UPS SYSTEM PANEL 'UPS2'
a EXISTING CIRCUIT TO BE REMOVED UNDER RENOVATION.

SCHEDULE OF EXISTING PANEL 'COM5' (2ND FLOOR STORAGE ROOM)

SURF MTD

120Y/208V-3Ø,4W — 60A MCB

	CKT NO	BREAKER TRIP	BREAKER POLES	WIRING NO.	WIRING SIZE	WIRING COND	LOAD SERVED	LOAD (KW) ØA	LOAD (KW) ØB	LOAD (KW) ØC	LOAD SERVED	BREAKER TRIP	BREAKER POLES	WIRING NO	WIRING SIZE	WIRING COND	CKT NO	
*	1	15	1	-	-	-	DICTAPHONE RECORDER	-			DICTAPHONE RECORDER	15	1	-	-	-	2	*
*	3	15	1	-	-	-	CCTV RECORDER CONSOLE		-									
	5	15	1	-	-	-				-	RICS/SACS MISC.	15	1	-	-	-	4	a
							SPARE			-	MOV. DIR. CONSOLE AC STRIP	15	1	-	-	-	6	a
a	7	15	1	-	-	-	SUPVR. CONSOLE AC STRIP	-			SUPVR CONSOLE CCTV PANELS	15	1	-	-	-	8	a
a	9	15	1	-	-	-	LRT RADIO AUX PWR MDC		-									
										-	WIREMOLD STRIP	15	1	-	-	-	10	a
a	11	15	1	-	-	-	LRT RADIO AUX PWR SC			-	RICS (AUX PWR/CONSOLE)	15	1	-	-	-	12	a
a	13	15	1	-	-	-	SACS (AUX PWR/CONSOLE)	-			SACS MIMIC BOARD	15	1	-	-	-	14	a
	15	15	1	-	-	-	SPARE		-		SPARE	20	1	-	-	-	16	
*	17	20	1	-	-	-	A.C. UNIT RM. 224			-	SPARE	20	1	-	-	-	18	
	19	20	1	-	-	-	SPARE	-			SPARE	20	1	-	-	-	20	
	21	20	1	-	-	-	SPARE		-		SPARE	20	1	-	-	-	22	
	23	20	1	-	-	-	SPARE			-	SPARE	20	1	-	-	-	24	
	25	-	-	-	-	-	SPACE	-			SPACE	-	-	-	-	-	26	
	27	-	-	-	-	-	SPACE		-		SPACE	-	-	-	-	-	28	
	29	-	-	-	-	-	SPACE			-	SPACE	-	-	-	-	-	30	
							TOTALS	-	-	-								

* EXISTING CIRCUIT TO BE RECONNECTED TO NEW UPS SYSTEM PANEL 'UPS2'
a EXISTING CIRCUIT TO BE REMOVED UNDER RENOVATION.

SCHEDULE OF EXISTING PANEL 'EL-2' (RM. 106A)

SURF. MTD

480Y/277V-3Ø,4W — 100A MCB

	CKT NO	BREAKER TRIP	BREAKER POLES	WIRING NO.	WIRING SIZE	WIRING COND	LOAD SERVED	LOAD (KW) ØA	LOAD (KW) ØB	LOAD (KW) ØC	LOAD SERVED	BREAKER TRIP	BREAKER POLES	WIRING NO	WIRING SIZE	WIRING COND	CKT NO	
b	1	20	1	-	-	-	EMERGENCY LIGHTS	1.6			UPS SYSTEM	75	3	-	-	-	2	a
								15.0										
b	3	20	1	-	-	-	EMERGENCY/EXIT LIGHTS		1.3		-	-	-	-	-	-	4	
									15.0									
	5	20	1	-	-	-	SPARE			-	-	-	-	-	-	-	6	
										15.0								
	7	20	1	-	-	-	SPARE	-			AC-1 & AC-2	20	3	-	-	-	8	a
								1.7										
	9	20	1	-	-	-	SPACE		-		-	-	-	-	-	-	10	
									1.7									
	11	20	1	-	-	-	SPACE			-	-	-	-	-	-	-	12	
										1.7								
	13	-	-	-	-	-	SPACE	-			COMM & SIGNAL EQUIPMENT (RM10BA)	75	3	-	-	-	14	*
								15.0										
	15	-	-	-	-	-	SPARE		-		-	-	-	-	-	-	16	
									15.0									
	17	-	-	-	-	-	SPACE			-	-	-	-	-	-	-	18	
										15.0								
	19	-	-	-	-	-	SPACE	-			TRANSFORMER TO PANEL EL-3	20	3	-	-	-	20	*
								3.0										
	21	-	-	-	-	-	SPACE		-		-	-	-	-	-	-	22	
									3.0									
	23	-	-	-	-	-	SPARE			-	-	-	-	-	-	-	24	
										3.0								
	25	-	-	-	-	-	SPACE	-			SPACE	-	-	-	-	-	26	
									-									
	27	-	-	-	-	-	SPACE			-	SPACE	-	-	-	-	-	28	
										-								
	29	-	-	-	-	-	SPACE				SPACE	-	-	-	-	-	30	
							TOTALS	19.6	19.3	18.0	(AFTER REMOVAL OF UPS. AC1 & AC2)							

* EXISTING CIRCUITS TO BE MAINTAINED
a EXISTING LOAD AND ASSOCIATED CIRCUITING TO BE REMOVED UNDER RENOVATION
b EXISTING LOAD TO BE MODIFIED UNDER RENOVATION

NOTE:
CONTRACTOR SHALL COORDINATE WITH PHASE WORK AND AUTHORITY PRIOR TO DISCONNECTING ANY EXISTING CIRCUIT NOTED ON THIS DRAWING

SCHEDULE OF EXISTING PANEL 'EL-3' (RM. 106A)

SURF MTD

120Y/208V-3Ø,4W — 60A MCB

	CKT NO.	BREAKER TRIP	BREAKER POLES	WIRING NO	WIRING SIZE	WIRING COND	LOAD SERVED	LOAD (KW) ØA	LOAD (KW) ØB	LOAD (KW) ØC	LOAD SERVED	BREAKER TRIP	BREAKER POLES	WIRING NO	WIRING SIZE	WIRING COND	CKT NO	
*	1	20	1	-	-	-	DISPATCH ROOM PA SYSTEM	0.5			FIRE EXTINGUISHER LIGHTS	20	1	-	-	-	2	*
								0.2										
*	3	20	1	-	-	-	FIRE ALARM CONTROL PANEL		0.5		EXG UPS ROOM FAN "EF-2"	20	1	-	-	-	4	*
									0.7									
*	5	20	1	-	-	-	EXG UPS ROOM FAN "EF-2A"			0.7	ELECTRIC DOOR BUTTONS	20	1	-	-	-	6	*
										0.2								
*	7	20	1	-	-	-	GENERATOR ROOM LIGHTS	1.2			SPARE	20	1	-	-	-	8	
								-										
	9	20	1	-	-	-	SPARE		-		SPARE	20	1	-	-	-	10	
	11	20	1	-	-	-	SPARE			-	SPARE	20	1	-	-	-	12	
	13	-	-	-	-	-	SPACE	-			SPACE	-	-	-	-	-	14	
								-										
	15	-	-	-	-	-	SPACE		-		SPACE	-	-	-	-	-	16	
	17	-	-	-	-	-	SPACE			-	SPACE	-	-	-	-	-	18	
	19	-	-	-	-	-	SPACE	-			SPACE	-	-	-	-	-	20	
								-										
	21	-	-	-	-	-	SPACE		-		SPACE	-	-	-	-	-	22	
	23	-	-	-	-	-	SPACE			-	SPACE	-	-	-	-	-	24	
							TOTALS	1.9	1.2	0.9								

* EXISTING CIRCUITS TO BE MAINTAINED

DWG. NO	DESCRIPTION	NO.	DATE	DESCRIPTION
REFERENCE		REVISIONS		

THE PREPARATION OF THIS DRAWING HAS BEEN FINANCED, IN PART, THROUGH A GRANT FROM THE U.S. DEPARTMENT OF TRANSPORTATION, FEDERAL TRANSIT ADMINISTRATION ACT OF 1964, AS AMENDED

COMMONWEALTH OF PENNSYLVANIA — REGISTERED PROFESSIONAL ENGINEER — LAWRENCE M. MOREHOUSE

SUBMITTED — 5/14/99 DATE

GAEC
DE LEUW- CATHER/URS GREINER/COM
A JOINT VENTURE
APPROVED — DATE

DESIGNED	RMA/LMM
DRAWN	MMM
CHECKED	LMM
IN CHARGE	LMM
DATE	MAY 19, 1999
SCALE	NONE

PORT AUTHORITY OF ALLEGHENY COUNTY
PITTSBURGH — PENNSYLVANIA

STAGE II LIGHT RAIL TRANSIT SYSTEM
OPERATIONS CONTROL CENTER FACILITY
EXISTING PANELBOARD SCHEDULES

CONTRACT NO. LRS-98-02-E
DWG. NO. EL910 — SHT. 95

$USERNAME$ $TIME$ $DATE$ $FILE$

S:\micros_1\FM-06-EC-119.dgn 01/28/2004 08:34:13 AM

SYSTEM DESIGN (FIBER OPTIC) BY NODE LOCATIONS

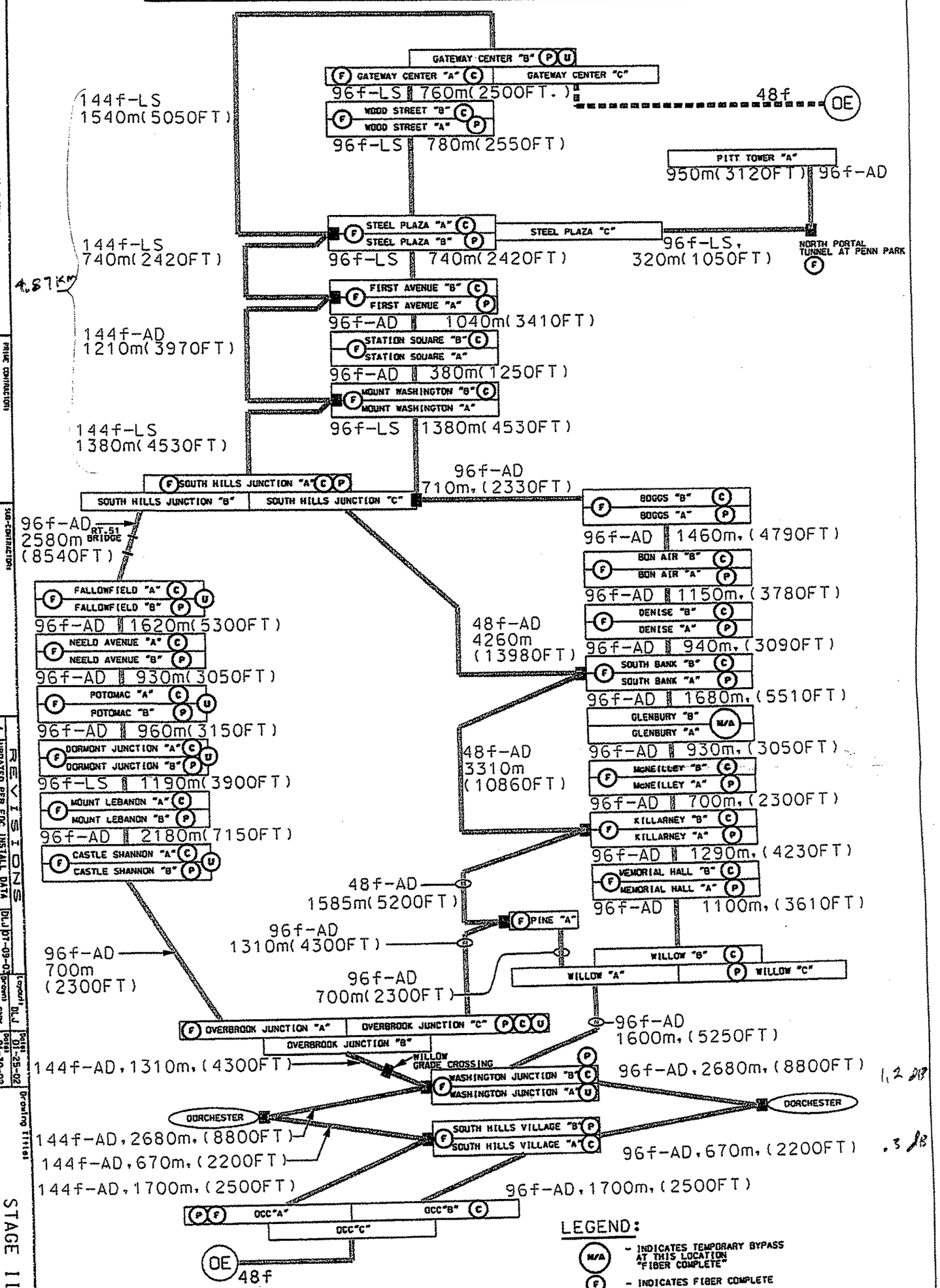

LEGEND:

- M/A – INDICATES TEMPORARY BYPASS AT THIS LOCATION "FIBER COMPLETE"
- F – INDICATES FIBER COMPLETE
- P – INDICATES POWER COMPLETE
- C – INDICATES CTS TESTED
- U – INDICATES UPS POWER COMPLETE
- INDICATES FIBER PULLED
- OE – INDICATES TO A SEPERATE FACILITY FOR OUTSIDE ENTITY
- LS – LS IS "LOW SMOKE ZERO HALOGEN"(LSZH)
- AD – AD IS "AERIAL DIELECTRIC SELF SUPPORTING"(ADSS)
- ■ – INDICATES SPLICE POINT

NOTES:

1. ALL DIMENSIONS ARE METERS AND FEET.

NO.	DESCRIPTION	BY	DATE
11	UPDATED PER FIBER,POWER,CTS & UPS STATUS	FCY	01-26-04
10	UPDATED PER FIBER,POWER & CTS STATUS	FCY	01-13-04
9	UPDATED PER FIBER,POWER & CTS STATUS	RH	01-05-04
8	UPDATED PER FOC INSTALL DATA	RH	12-31-03
7	UPDATED PER FOC INSTALL DATA	RH	11-23-03
6	UPDATED PER FOC INSTALL DATA	RH	11-01-03
5	UPDATED PER FOC INSTALL DATA	DLJ	10-21-03

REVISIONS

SPLICE - .2 dB

PORT AUTHORITY OF ALLEGHENY COUNTY
345 SIXTH AVENUE THIRD FLOOR PITTSBURGH, PA. 15222-2527

PRIME CONTRACTOR: UNION SWITCH & SIGNAL INC. 1000 TECHNOLOGY DRIVE PITTSBURGH, PA. 15219-3120

SUB-CONTRACTOR: FISCHBACH & MOORE ELECTRIC INC. 761 FIFTH AVE. KING OF PRUSSIA, PA. 19406 610-992-9442 - VOICE 610-992-9264 -FAX

NO.	DESCRIPTION	BY	DATE
4	UPDATED PER FOC INSTALL DATA	DLJ	07-09-03
3	UPDATED PER FOC INSTALL DATA	DLJ	07-02-03
2	ADDED FIGURE-8 DUCT	RH	05-28-03
1	REVISED LENGTHS	DLJ	11-20-02
0	ORIGINAL	RH	02-05-02

REVISIONS

Layout: DLJ Date: 01-25-02
Drawn: SNW Date: 01-30-03
Checked: DLJ Date: 11-20-02
Submitted: RH Date: 11-20-02
Approved: RH Date: 11-20-02
Section & Title: N/A

Drawing Title: STAGE II LIGHT RAIL TRANSIT SYSTEM SYSTEM DESIGN (FIBER OPTIC) BY NODE LOCATIONS

CONTRACT NO: LRT-006
SCALE: NTS
DRAWING NO: FM-06-EC-119
SHEET NO: 1