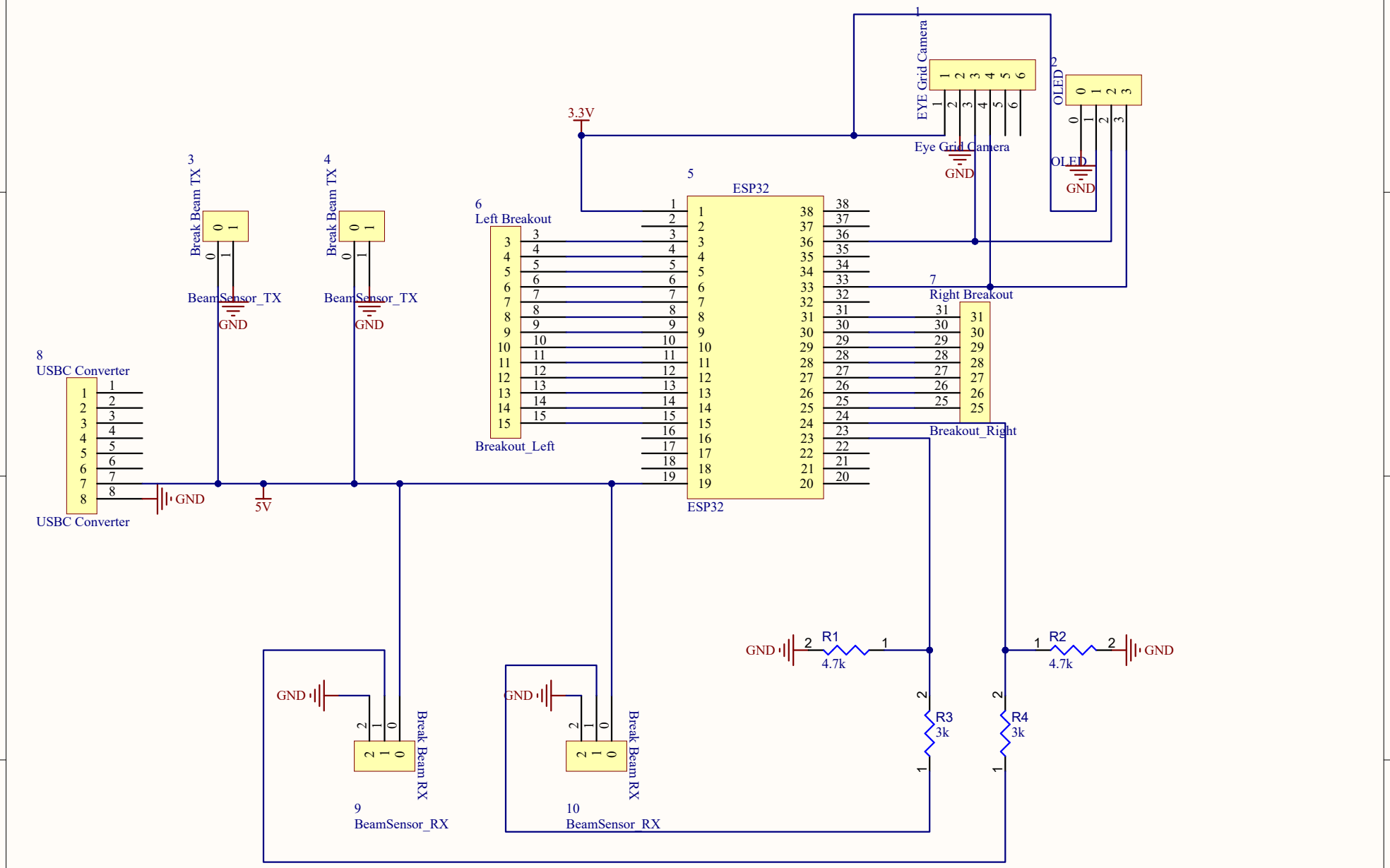

Title		
Size A	Number	Revision
Date: 4/13/2026		Sheet of
File: \\..\300_PCB1.SchDoc		Drawn By: