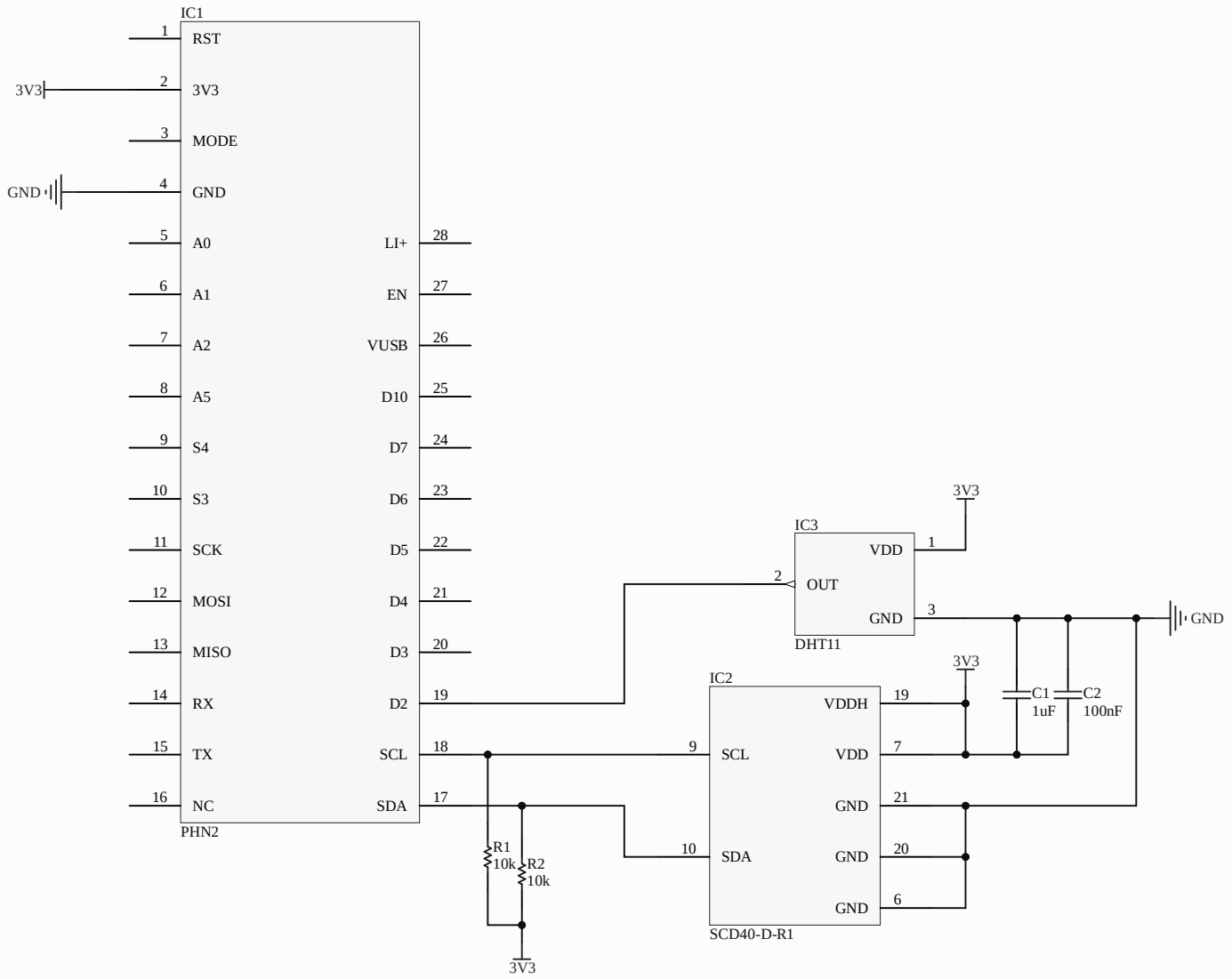

Title	THCO2 + PHOTON 2	
Size A4	Number	Revision
Date: 4.28.2024		Sheet of
File: thco2_sch.SchDoc		Drawn By: Aivars Sīlis