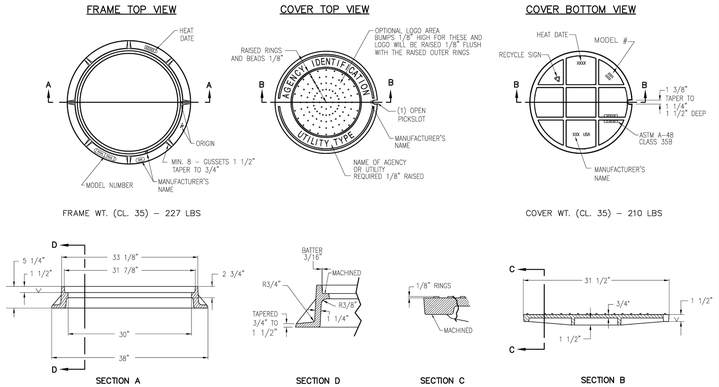

NOTE:

LETTERING ON MANHOLE COVER TO CONTAIN NAME OF AGENCY AND UTILITY FOR WHICH MANHOLE IS NEEDED, (I.E. "PHOENIX SANITARY SEWER"), OR AS DIRECTED. THE TOTAL WIDTH OF INDIVIDUAL LETTERS TO BE SUCH THAT LETTERS AND WORDS ARE EQUALLY SPACED AND BALANCED TO FORM A COMPLETE CIRCLE WITH SPACERS BEFORE AND AFTER THE WORD IDENTIFYING THE AGENCY INVOLVED. LETTERS TO BE 2" IN HEIGHT AND RAISED FLUSH W/ TOP OF COVER. TYPE OF LETTERS TO BE SUBMITTED FOR APPROVAL. WEIGHT OF CASTINGS SHALL BE NO MORE THAN 2% MORE OR LESS THAN THE APPROXIMATE WEIGHT SPECIFIED. CASTINGS SHALL CONFORM TO ASTM A-48, CLASS 35 AND AASHTO M306. THE BEARING SURFACES OF THE FRAMES AND COVERS SHALL BE MACHINED AND THE COVERS SHALL SEAT FIRMLY WITHOUT ROCKING. ALL DIMENSIONS SHALL HAVE A 1/16" TOLERANCE.

DETAIL NO.		STANDARD DETAIL		REVISED	DETAIL NO.
423–2	MARICOPA ASSOCIATION of GOVERNMENTS	ENGLISH	30" CAST IRON MANHOLE FRAME AND COVER	01–01–2020	423–2

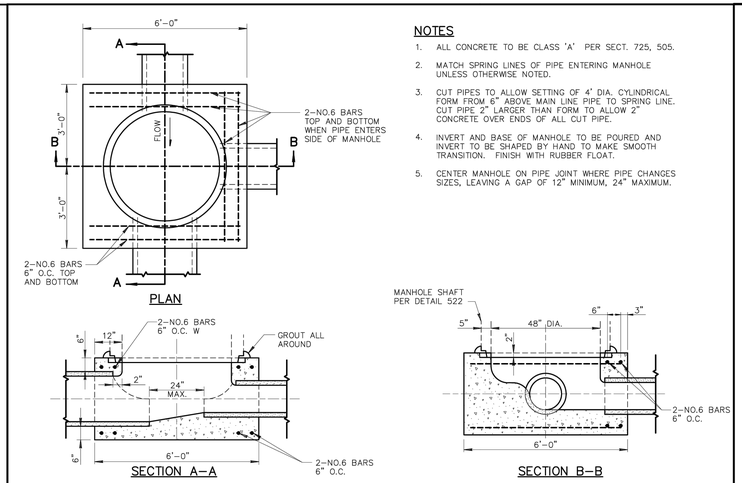

NOTES

1. ALL CONCRETE TO BE CLASS 'A' PER SECT. 725, 505.
2. MATCH SPRING LINES OF PIPE ENTERING MANHOLE UNLESS OTHERWISE NOTED.
3. CUT PIPES TO ALLOW SETTING OF 4' DIA. CYLINDRICAL FORM FROM 6" ABOVE MAIN LINE PIPE TO SPRING LINE. CUT PIPE 2" LARGER THAN FORM TO ALLOW 2" CONCRETE OVER ENDS OF ALL CUT PIPE.
4. INVERT AND BASE OF MANHOLE TO BE POURED AND INVERT TO BE SHAPED BY HAND TO MAKE SMOOTH TRANSITION. FINISH WITH RUBBER FLOAT.
5. CENTER MANHOLE ON PIPE JOINT WHERE PIPE CHANGES SIZES, LEAVING A GAP OF 12" MINIMUM, 24" MAXIMUM.

DETAIL NO.		STANDARD DETAIL		REVISED	DETAIL NO.
520	MARICOPA ASSOCIATION of GOVERNMENTS	ENGLISH	STORM DRAIN MANHOLE BASE (48" AND SMALLER)	01–01–1998	520

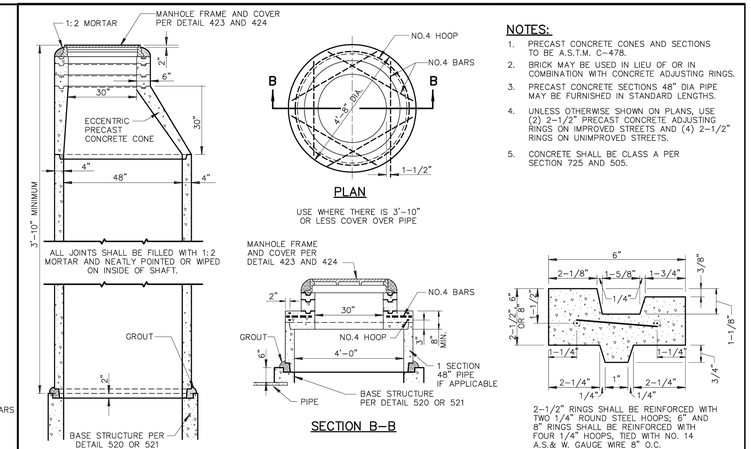

NOTES:

1. PRECAST CONCRETE CONES AND SECTIONS TO BE A.S.T.M. C–478.
2. BRICK MAY BE USED IN LIEU OF OR IN COMBINATION WITH CONCRETE ADJUSTING RINGS.
3. PRECAST CONCRETE SECTIONS 48" DIA PIPE MAY BE FURNISHED IN STANDARD LENGTHS.
4. UNLESS OTHERWISE SHOWN ON PLANS, USE (2) 2–1/2" PRECAST CONCRETE ADJUSTING RINGS ON IMPROVED STREETS AND (4) 2–1/2" RINGS ON UNIMPROVED STREETS.
5. CONCRETE SHALL BE CLASS A PER SECTION 725 AND 505.

DETAIL NO.		STANDARD DETAIL		REVISED	DETAIL NO.
522	MARICOPA ASSOCIATION of GOVERNMENTS	ENGLISH	STORM DRAIN MANHOLE SHAFT	01–01–2015	522

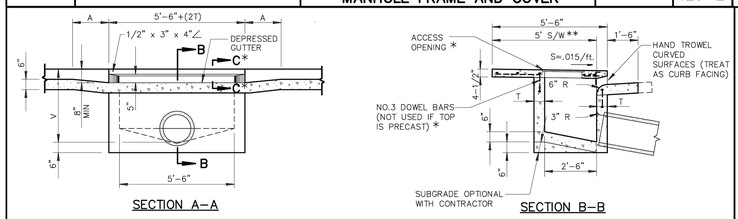

NOTES:

1. THE ENTIRE CATCH BASIN COVER MAY BE POURED IN PLACE OR PRECAST.
2. CONNECTION PIPES MAY BE PLACED IN ANY POSITION AROUND THE WALLS PROVIDED THE POSITION IS CONSISTENT WITH THE PLAN.
3. OUTLET PIPE SHALL BE TRIMMED TO FINAL SHAPE AND LENGTH BEFORE CONCRETE IS POURED.
4. FLOOR OF BASIN SHALL BE TROWELLED TO A HARD SMOOTH SURFACE AND SHALL SLOPE FROM ALL DIRECTIONS TO OUTLET.
5. ALL STRUCTURAL STEEL TO BE PAINTED ONE SHOP COAT OF NO. 1 D PAINT AND TWO FIELD COATS OF NO. 10 PAINT AS PER SECT. 790.
6. CONCRETE SHALL BE CLASS A PER SECTION 725.

CURB	A
4"	3'–3"
6"	1'–9"
7"	1'–0"

DIMENSIONS

T=6" IF V=4' OR LESS
T=8" IF V IS BETWEEN 4' AND 8'
T=10" IF V IS 8' OR MORE (IF V EXCEEDS 10' SPECIAL DESIGN IS REQUIRED)
V=3'–6" UNLESS OTHERWISE SPECIFIED.

* SEE DETAILS 536–1 AND 536–2 FOR DETAILS AND SECTIONS COMMON TO ALL CURB OPENING CATCH BASINS.
** 4' LOCATIONS WHERE 4' S/W IS REQUIRED.

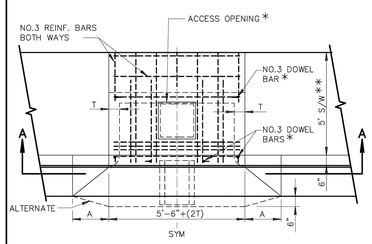

DETAIL NO.		STANDARD DETAIL		REVISED	DETAIL NO.
531	MARICOPA ASSOCIATION of GOVERNMENTS	ENGLISH	5'–6" CURB OPENING CATCH BASIN – TYPE 'B'	01–01–1998	531

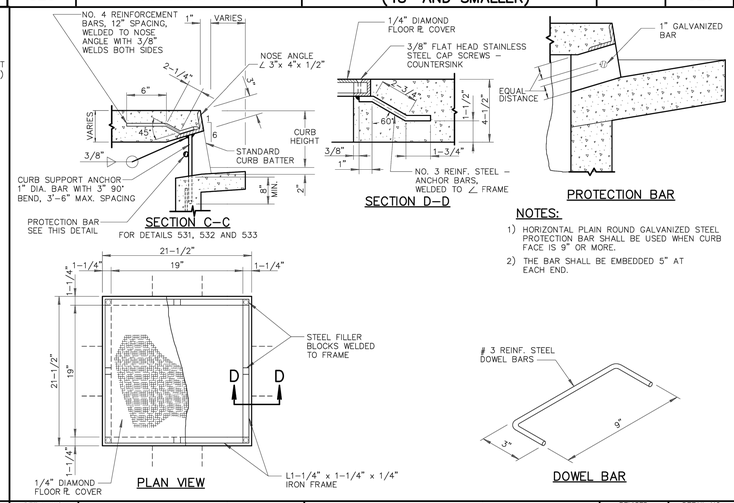

NOTES:

1) HORIZONTAL PLAIN ROUND GALVANIZED STEEL PROTECTION BAR SHALL BE USED WHEN CURB FACE IS 9" OR MORE.
2) THE BAR SHALL BE EMBEDDED 5" AT EACH END.

DETAIL NO.		STANDARD DETAIL		REVISED	DETAIL NO.
536–1	MARICOPA ASSOCIATION of GOVERNMENTS	ENGLISH	COMMON DETAILS AND SECTIONS FOR CURB OPENING CATCH BASINS	01–01–1999	536–1

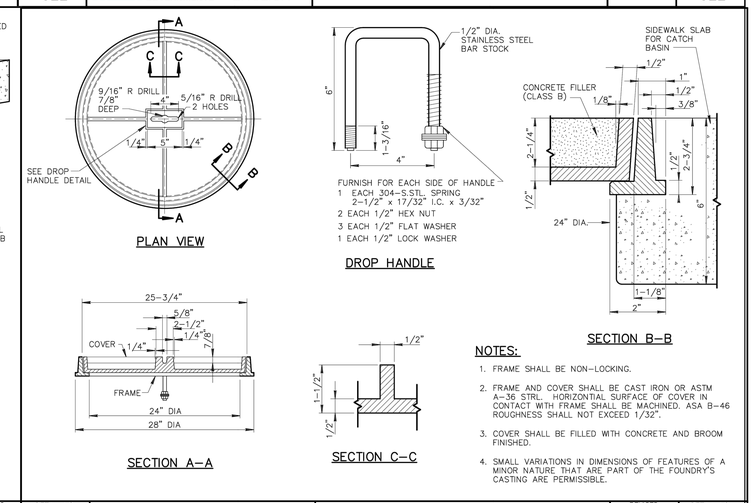

NOTES:

1. FRAME SHALL BE NON–LOCKING.
2. FRAME AND COVER SHALL BE CAST IRON OR ASTM A–36 STRL. HORIZONTAL SURFACE OF COVER IN CONTACT WITH FRAME SHALL BE MACHINED. ASA B–46 ROUGHNESS SHALL NOT EXCEED 1/32".
3. COVER SHALL BE FILLED WITH CONCRETE AND BROOM FINISHED.
4. SMALL VARIATIONS IN DIMENSIONS OF FEATURES OF A MINOR NATURE THAT ARE PART OF THE FOUNDRY'S CASTING ARE PERMISSIBLE.

DETAIL NO.		STANDARD DETAIL		REVISED	DETAIL NO.
536–2	MARICOPA ASSOCIATION of GOVERNMENTS	ENGLISH	ALTERNATE COVER FOR CURB OPENING CATCH BASINS	01–01–1998	536–2

REVISIONS

PROJECT NO. 121.044
DRAWN C. DAHM
CHECKED D. PHILLIPS
SUBMITTAL DATES

OTB DATE –

JSACIVIL
Engineering | Planning | Management
111 TUMWATER BLVD.SE, SUITE B203
TUMWATER, WA 98512

STAMP
Registered Professional Engineer (Civil) CERTIFICATE NO. 42534 JOHN P. SEVERS Date Signed ..... ARIZONA, U.S.A.
03/10/2025

CRASH CHAMPIONS
COMMERCIAL DEVELOPMENT PROJECT
303 AUTOSHOW DRIVE
SURPRISE, ARIZONA

HillSide architecture plc

SHEET TITLE
STORMWATER DETAILS

SHEET
C7.1

FSXX-XXXX

Mar 13, 2025 2:06:06pm – User: CarolDahm
N:\2 – PROJECTS\121 HILLSIDE ARCHITECTURE\121.044 CRASH CHAMPIONS SURPRISE, AZ\ACAD\121.044 SD–02.DWG