Clock generator & Reset fanout

File: clock_gen.kicad_sch

Switched 4 x 1-lanes PCIe

File: 4_1-lanes_PCIe.kicad_sch

RC 1-lane and 2-lane PCIE

File: RC_4-lanes-PCIe.kicad_sch

PCIe switch

File: pcie_switch.kicad_sch

Direct 4-lane PCIe

File: direct_PCIe.kicad_sch

H1 H2 H3 H4 H5 H6

Chili.CHIPS

Sheet: /

File: openpci2-backplane.kicad_sch

Title:

Size: A4	Date: 2025-07-25	**Rev: r1B1**
KiCad E.D.A. 9.0.3		Id: 1/6

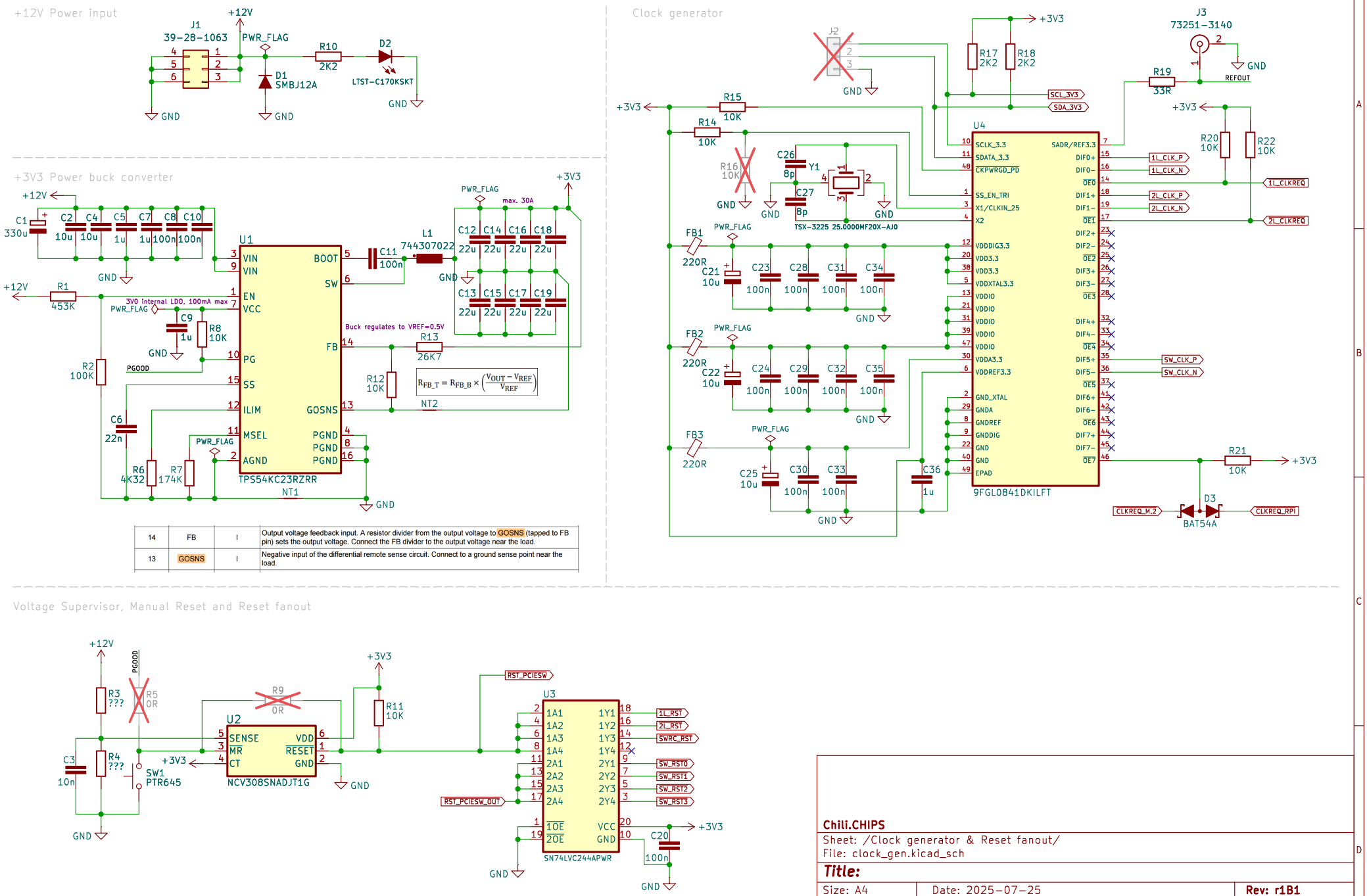

14	FB	I	Output voltage feedback input. A resistor divider from the output voltage to GOSNS (tapped to FB pin) sets the output voltage. Connect the FB divider to the output voltage near the load.
13	GOSNS	I	Negative input of the differential remote sense circuit. Connect to a ground sense point near the load.

Chili.CHIPS

Sheet: /Clock generator & Reset fanout/

File: clock_gen.kicad_sch

Title:

Size: A4	Date: 2025-07-25	Rev: r1B1
KiCad E.D.A. 9.0.3		Id: 2/6

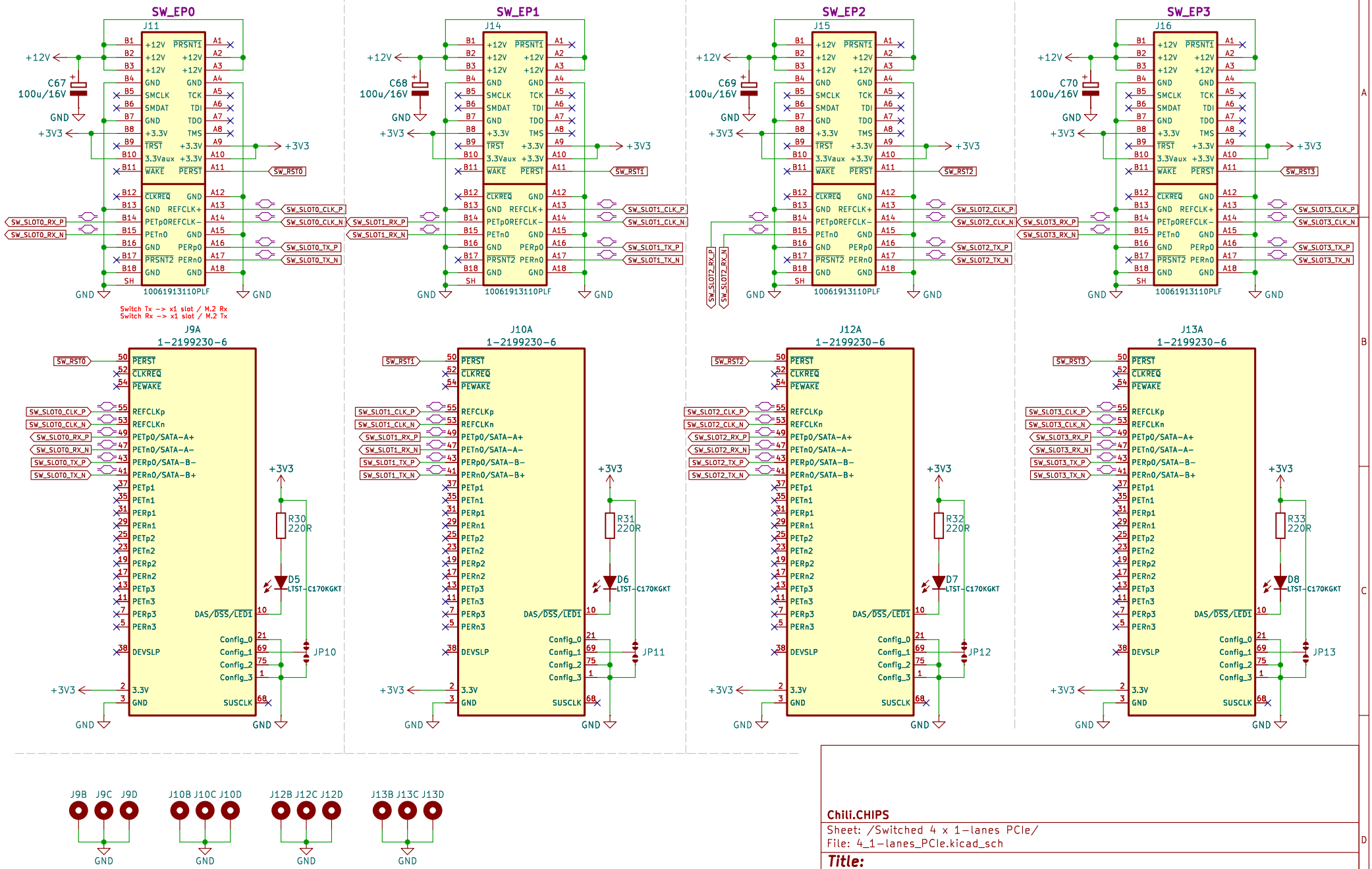

Chili.CHIPS

Sheet: /Switched 4 x 1-lanes PCIe/

File: 4_1-lanes_PCIe.kicad_sch

Title:

Size: A4	Date: 2025-07-25	Rev: r1B1
KiCad E.D.A. 9.0.3		Id: 5/6

4-lane PCIe for Root Complex

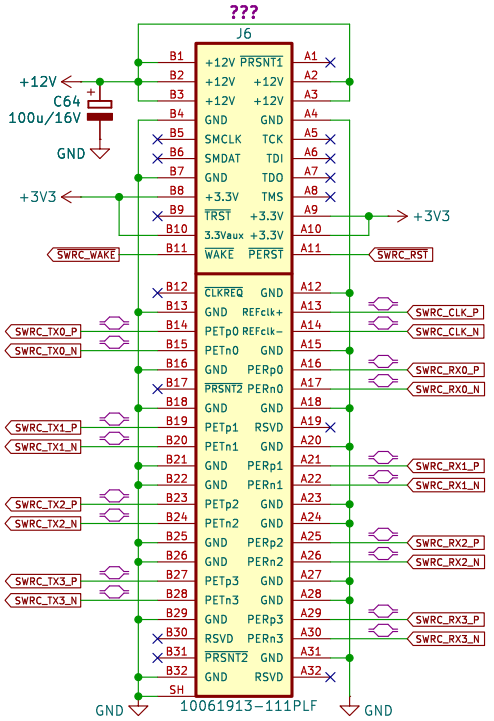

4-lane M.2 (Type M) for Root Complex

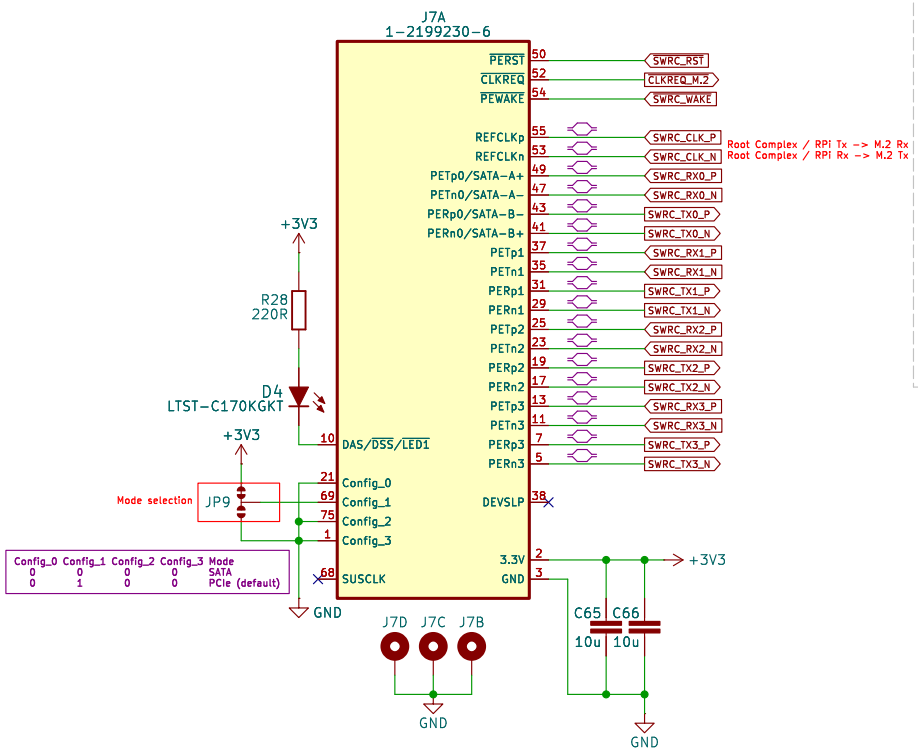

Raspberry Pi FPC 16-pin connector

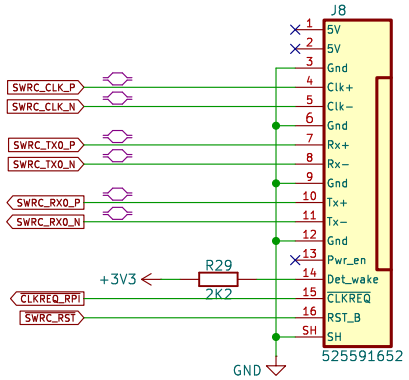

2.1. PCIe Signals

The PCIe signals are a single lane of PCIe Gen 2, including CLKREQ and RST_B sideband signals which operate at 3.3V.

2.1.1. Pwr_en pin

This pin is a 3.3V output from the Raspberry Pi to a HAT+ or other add-on board, and signals to the HAT+ to power up any supplies. For example, in the instance of the Raspberry Pi M.2 M Key HAT+, this enables the M.2 3.3V power (which is generated from the incoming 5V). Provide a 100K low pull on this pin on any HAT+.

2.1.2. Det_wake pin

This pin is a 3.3V input to the Raspberry Pi. Pull high to 3.3V either from a resistive divider from 5V (3k6/6k8 giving 2.35k output impedance), or from permanently enabled 3.3V (using a 2.2K resistor).
The Raspberry Pi will detect this high pull at boot time, and will automatically probe the PCIe bus.
Use the PCIe WAKE# to pull this low

Chili.CHIPS

Sheet: /RC 1-lane and 2-lane PCIE/
File: RC_4-lanes-PCIe.kicad_sch

Title:

Size: A4	Date: 2025-07-25	**Rev: r1B1**
KiCad E.D.A. 9.0.3		Id: 4/6

PCIe 4-slot switch

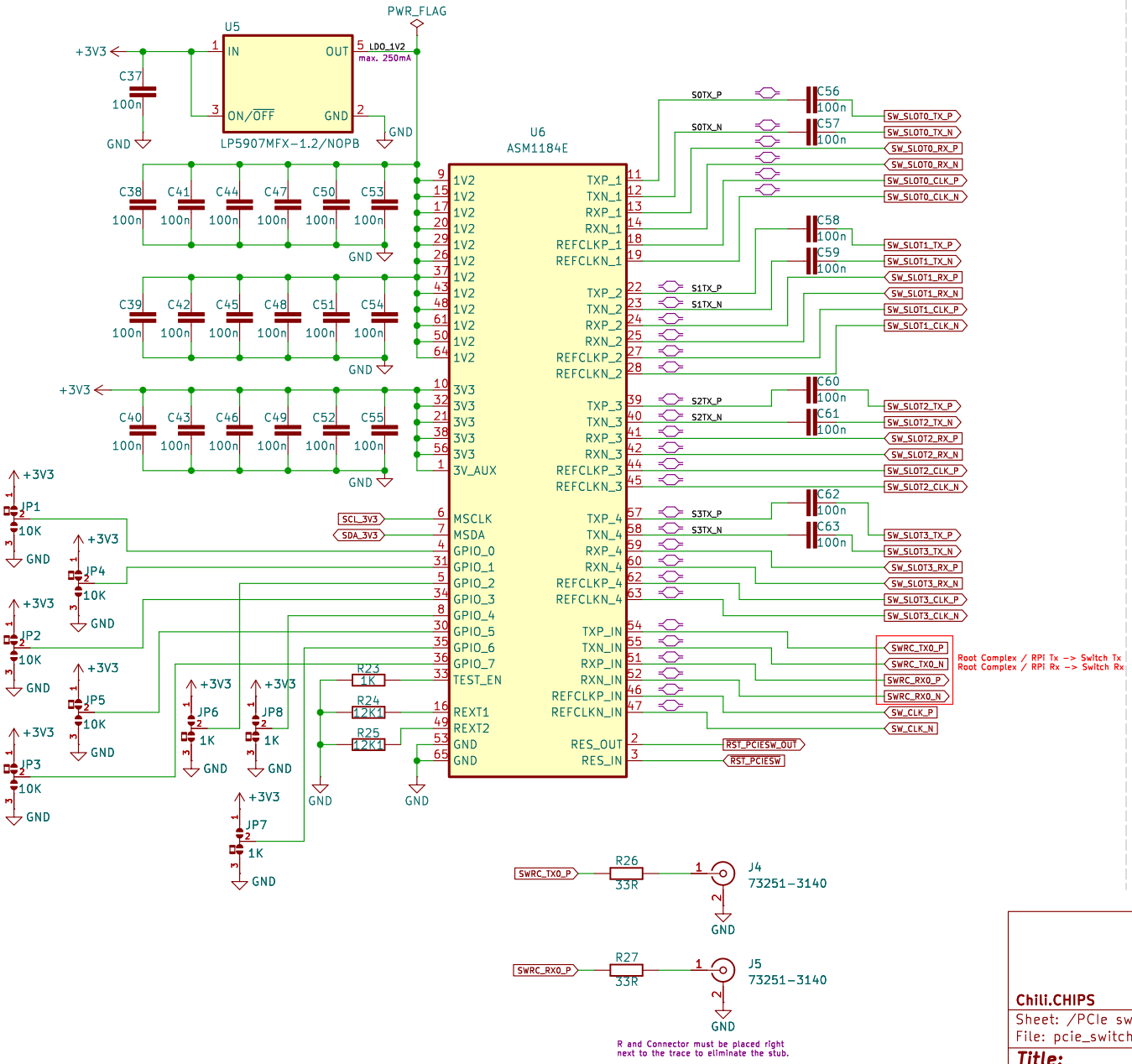

Chili.CHIPS

Sheet: /PCIe switch/

File: pcie_switch.kicad_sch

Title:

Size: A4	Date: 2025-07-25	**Rev: r1B1**
KiCad E.D.A. 9.0.3		Id: 3/6

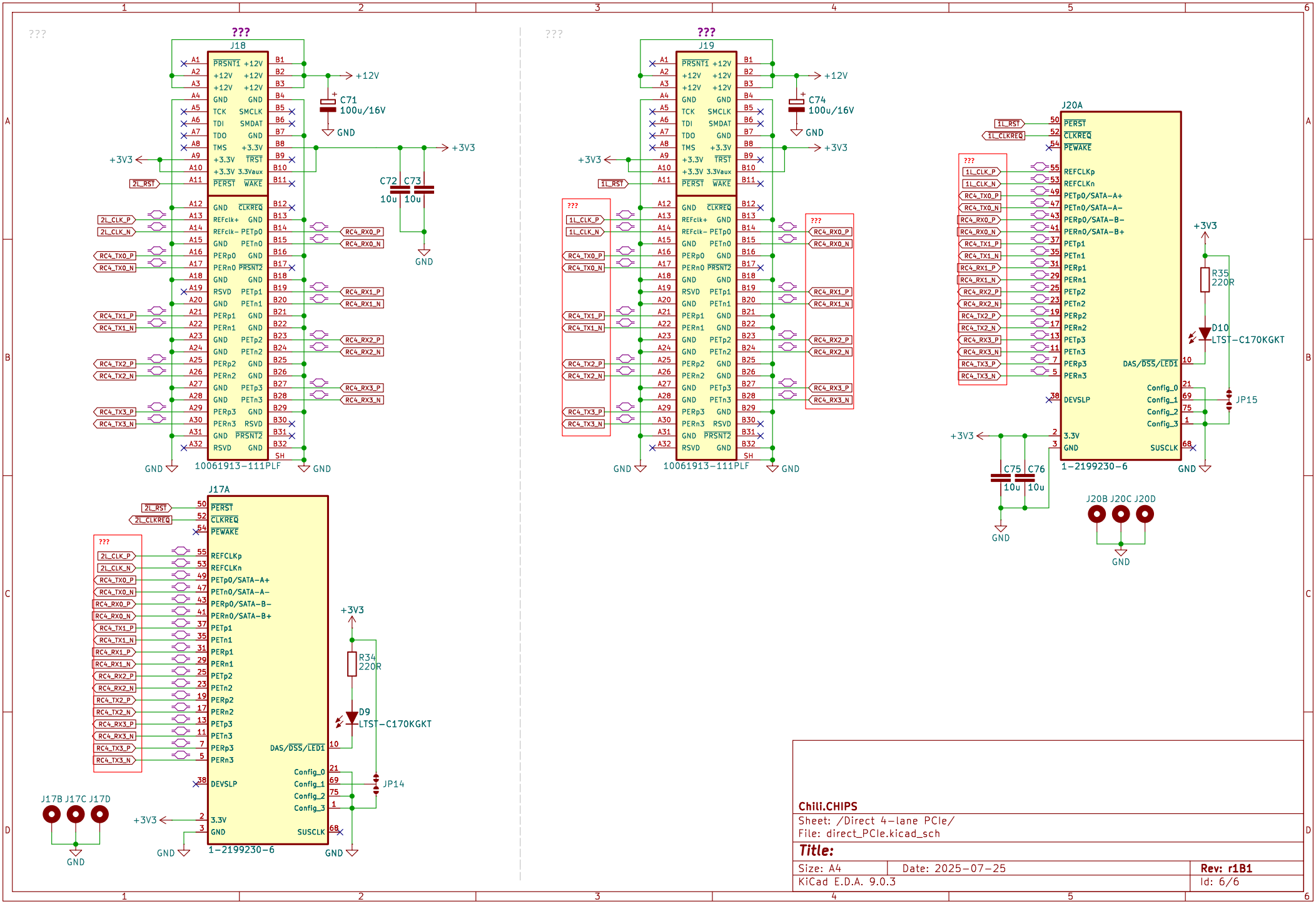
J18
J19
J20A
J17A
10061913-111PLF
1-2199230-6
C71 100u/16V
C74 100u/16V
C72 C73 10u 10u
C75 C76 10u 10u
R35 220R
R34 220R
D10 LTST-C170KGKT
D9 LTST-C170KGKT
JP15
JP14
J17B J17C J17D
J20B J20C J20D
+12V
+3V3
GND
2L_RST
2L_CLKREQ
1L_RST
1L_CLKREQ
2L_CLK_P
2L_CLK_N
1L_CLK_P
1L_CLK_N
RC4_TX0_P
RC4_TX0_N
RC4_RX0_P
RC4_RX0_N
RC4_TX1_P
RC4_TX1_N
RC4_RX1_P
RC4_RX1_N
RC4_TX2_P
RC4_TX2_N
RC4_RX2_P
RC4_RX2_N
RC4_TX3_P
RC4_TX3_N
RC4_RX3_P
RC4_RX3_N
Chili.CHIPS
Sheet: /Direct 4-lane PCIe/
File: direct_PCIe.kicad_sch
Title:
Size: A4
Date: 2025-07-25
Rev: r1B1
KiCad E.D.A. 9.0.3
Id: 6/6