Supplement
Service Manual

DAIKIN
CONTAINER REFRIGERATION UNIT

LXE10E100
or later

LXE10E-A
LXE10E-1

2009
AFTER SALES SERVICE DIVISION
INTERNATIONAL TRAINING CENTER

STR 09-10

INDEX 1/3

Oct. 2009

1.	DAIKIN GLOBAL SERVICE SUPPORT SYSTEM		**(5)**
1)	DAIKIN PARTS CENTERS in the world	1-1	(7)
2)	Spare Parts Supply Network	1-2	(8)
3)	Reefer Parts Supply System	1-3	(9)
4)	Daikin Reefer Service Officers	1-4	(10)
2.	OUTLINE & CONSTRUCTION		**(11)**
1)	What's new LXE10E100 or later	2-1	(13)
2)	Specification diffrences for LXE10E100 with DECOS3e	2-5	(17)
3)	〃 〃 LXE10E-A, 10E-1 with DECOS3d	2-6	(18)
4)	〃 〃 LXE10E-A with DECOS3c	2-7	(19)
5)	Outline of LXE10E-A & LXE10E-1	2-8	(20)
6)	Compressor chamber	2-12	(24)
7)	Caution labels	2-13	(25)
8)	Valve chamber	2-14	(26)
9)	Indoor	2-15	(27)
10)	Control box & Controller inside for LXE10E100	2-16	(28)
11)	Control box & Controller inside for LXE10E-A, 10E-1	2-17	(29)
12)	Connection from/to controller DECOS3e	2-18	(30)
13)	Connector type Terminal Board	2-19	(31)
14)	Screw type Terminal Board	2-20	(32)
3.	COMPRESSOR & WIRING DIAGRAM		**(33)**
1)	Compressor Construction	3-1	(35)
2)	Wiring diagram for LXE10E100	3-2	(36)
3)	〃 〃 --Connector type terminal board + Rechargeable battery	3-3	(37)
4)	〃 〃 -- 〃 〃 + Temp. recorder + RM	3-4	(38)
5)	〃 〃 --Screw type terminal board + Rechargeable battery	3-5	(39)
6)	〃 〃 -- 〃 〃 + Temp. recorder + RM	3-6	(40)
7)	The protected circuit by fuse 1,2,3 or 9	3-7	(41)
8)	〃 〃 1,2,3 or 6	3-8	(42)
9)	〃 〃 4 or 5	3-9	(43)
10)	Set point and protective devices	3-10	(44)
11)	Operation Pressure and Running Current, Chilled operation	3-11	(45)
12)	〃 〃 〃 , Frozen operation	3-12	(46)
4.	PIPING DIAGRAM		**(47)**
1-1)	Piping Diagram--Frozen & Pull down operation	4-1	(49)
1-2)	Operation flow-- 〃 〃	4-2	(50)
2-1)	Piping Diagram--Chilled operation	4-3	(51)
2-2)	Operation flow-- 〃 〃	4-4	(52)
3-1)	Piping Diagram--Defrost operation	4-5	(53)
3-2)	Operation flow-- 〃 〃	4-6	(54)
4)	Piping Diagram--Dehumdfication Control	4-7	(55)
5)	Defrost Operation	4-8	(56)
6)	On demand defrost & Quick pull down defrost	4-9	(57)
7)	Principle of Dehumdfication Control	4-10	(58)
8)	Automatic Pump-Down	4-11	(59)
9)	How to use 5 Service Service Ports	4-13	(61)
10)	Model names & the specified charge amount of R134a	4-14	(62)
11)	Connection for Operation Pressure Check	4-15	(63)
12)	Connection for Refrigerant Charge	4-16	(64)

INDEX 2/3

5. CONTROLLER			**(65)**
1)	Control panel	5-1	(67)
2)	Normal Operation procedure	5-2	(68)
3)	Configration procedure	5-3	(69)
4)	Alarm Codes	5-4	(70)
5)	Sensor alarm	5-5	(71)
6)	Chartless functin	5-6	(72)
7)	S-PTI Judgement	5-8	(74)
8)	F-PTI Judgement	5-10	(76)
6. FUNCTIONAL PARTS			**(77)**
1)	Electronic Expantion Valve	6-1	(79)
2)	Suction Modulation Valve	6-4	(82)
3)	Solenoide Valve	6-6	(84)
4)	How is pilot type valve opened ?	6-7	(85)
5)	Function of Wake Up Battery	6-8	(86)
6)	Rechargeable battery	6-9	(87)
7)	Function of Lithium Battery	6-10	(88)
8)	Function of Lithium Battery	6-11	(89)
9)	Pen drive gear damaged in recorder	6-12	(90)
10)	Filter & Strainer	6-13	(91)
11)	PCC, Phase Correction Contactor	6-15	(93)
12)	Modulation Valve	6-16	(94)
7. TROUBLESHOOTING			**(95)**
1)	Compressor Replacement	7-1	(97)
2)	Contents of controller replacement with spare DECOSIIIe	7-6	(102)
3)	Spare controller DECOSIIIe	7-7	(103)
4)	Replacement of controller DECOSIIIe with spare DECOSIIIe	7-8	(104)
5)	〃 〃 DECOSIIId or IIIc with spare DECOSIII	7-10	(106)
	〃 〃 DECOSIIIb with spare DECOSIIIe	7-12	(108)
6)	Initial setting to spare DECOSIIIe	7-14	(110)
7)	Up-loading to spare DECOSIIIe	7-16	(112)
8)	Initial Setting Table for spare DECOSIIId (After 2005/7)	7-17	(113)
10)	〃 〃 DECOSIIIc (Before 2005/6)	7-18	(114)
11)	〃 〃 DECOSIIIb	7-19	(115)
12)	Initial setting procedure for spare DECOSIIIe,IIId,IIIc,IIIb	7-20	(116)
	Initial Setting Table for spare DECOSIIIe	7-21	(117)
13)	Emergency Operation	7-22	(118)
14)	Emergency Operation for LXE10E100 or later	7-23	(119)
15)	〃 〃 for LXE10E-A, LXE10D	7-26	(122)
16)	EV Diagnosis	7-29	(125)
17)	F603 related to SMV board malfunction	7-33	(129)
18)	PTCT Board Replacement	7-34	(130)
19)	Judgement with Liquid/Moisture Indicator	7-35	(131)
20)	Judgement with Liquid/Moisture Indicator	7-36	(132)
21)	RS/SS sensor malfuntion	7-37	(133)
22)	USDA sensor alarm	7-38	(134)
23)	Alarm due to disconnection or insufficient connection of ca	7-39	(135)
24)	DIAGNOSIS	7-40	(136)
25)	Solenoide Valve ON-OFF	7-41	(137)
26)	REPLACEMENT of HPT & LPT	7-42	(138)

INDEX 3/3

8. DCCS			**(141)**
1)	Field Job & Office Job	8-1	(143)
2)	DCCS Software Configration	8-2	(144)
3)	DCCS Preperation	8-3	(145)
4)	PC cables for DCCS	8-4	(146)
5)	Introduction of new DCCS8.0	8-5	(147)
6)	Introduction of new DCCS7.01	8-6	(148)
9. For LXE10E101A, 102A, LXE10E-1			**(153)**
1)	NITIAL SETTING PROCEDURE for Spare Controller DECO	9-1	(155)
2)	Compressor chamber	9-2	(156)
3)	Valve chamber	9-3	(157)
4-1)	Wiring diagram for LXE10E101A,102A	9-4	(158)
4-2)	〃 〃 for LXE10E-1 (Connector type terminal boa	9-5	(159)
4-3)	〃 〃 for LXE10E-1 (Screw type terminal board)	9-6	(160)
5-1)	The proted circuit by fuse circuit for LXE10E101A,102A	9-7	(161)
5-2)	〃 〃 for LXE10E-1	9-8	(162)
6-1)	Piping Diagram--Frozen & Pull down operation	9-9	(163)
6-2)	Operation flow-- 〃 〃	9-10	(164)
7-1)	Piping Diagram--Chilled operation	9-11	(165)
7-2)	Operation flow-- 〃 〃	9-12	(166)
8-1)	Piping Diagram--Defrost operation	9-13	(167)
8-2)	Operation flow-- 〃 〃	9-14	(168)
9)	Piping Diagram--Dehumdfication Control	9-15	(169)
10)	Automatic Pump-Down	9-16	(170)
11)	How to use 5 Service Service Ports	9-18	(172)
12)	Connection for Operation Pressure Check	9-19	(173)
13)	Connection for Refrigerant Charge	9-20	(174)
14)	Stop valve handling	9-21	(175)
15)	Emergency Operation	9-23	(177)
10. APPENDIX			**(183)**
1)	Standard tightening torque	10-1	(185)
2)	Resistance of motor & valve coil	10-2	(186)
3)	HFC-134a Characteristic Table, Temperature-Gauge Pressure	10-3	(187)
4)	〃 Characteristic Curve, Temperature-Gauge Pressure	10-4	(188)
5)	〃 Thermodynamic Properties of Saturation Condition	10-5	(189)
6)	〃 p-h chart	10-6	(190)
7)	Characteristic table for Temperature Sensor	10-7	(191)
8)	〃 〃 High Pressure Tranceducer	10-8	(192)
9)	〃 〃 Low Pressure Tranceducer	10-8	(192)

DAIKIN GLOBAL SERVICE SUPPORT SYSTEM

1

DAIKIN PARTS CENTERS in the World

2007/2/1

4 Regional Parts Centers / 10 Satellite Parts Centers
Supporting Our Customers & 274 Service Contractors

DAIKIN U.S. CORPORATION (LOS ANGELES U.S.A.)
C/O SUMITOMO WAREHOUSE (U.S.A.), INC.
[US PARTS DISTRIBUTION CENTER]

DAIKIN INDUSTRIES, LTD. SAKAI PARTS CENTER (OSAKA JAPAN)
[WORLD PARTS DISTRIBUTION CENTER]

4 Regional Parts Centers

Osaka / Japan	Ostende / Belgium
Los Angeles / USA	Singapore

10 Satellite Parts Centers

Singapore	Montevideo / Uruguay
Hong Kong / China	Colon / Panama
La Spezia / Italy	Sydney / Australia
Cape Town / South Africa	Vancouver / Canada
Santiago / Chile	Auckland / New Zealand

274 Service Contractors

China	23	N. America	33
Asia	30	C.&S. America	45
Australia / New Zealand	35	Japan & Korea	14
Europe M. East/S. Africa	93	Russia	1

DAIKIN EUROPE N.V. (OSTENDE BELGIUM)
[EUROPE PARTS DISTRIBUTION CENTER]

DAIKIN ASIA SERVICING PTE. LTD. (SINGAPORE)
[SINGAPORE PARTS DISTRIBUTION CENTER]

Spare Parts Supply Network

* Enough parts stock at 4 REGIONAL PARTS CENTERs (RPC)
* 10 SATELLITE PARTS CENTERs (SPC) for prompt supply locally
* SERVICE CONTRACTORS can place order for reefer spare parts through Reefer Parts Distribution System (RPD System) on website.

Region		Regional P/C (RPC)		Satellite P/C (SPC)	
Asia	Japan	Daikin Industries, Ltd. (DIL)	Mr.Akifumi Iseki < container.parts@daikin.co.jp >	---	---
	China			---	---
	Korea			Ming Fung Reefer Container Service Co. (Hong Kong)	Ms.May Leung < maylkl@netvigator.com >
	Hong Kong	Daikin Asia Servicing Pte. Ltd. (DAP)	Mr. Hidehiko Kato < hidehiko.kato@grp.daikin.co.jp >		
	Taiwan				
	South East			Eastern (1961) Co. Pte. Ltd. (Singapore)	Mr.Patrick Goh < patrick@eastern1961.com.sg >
	Others			---	---
Australia	All regions			IRS International Pty.Ltd. (Melbourne office)	Mr. Wally Terpilowski < wterpilowski@irsaust.com >
New Zealand	All regions			IRS International Pty.Ltd. (Auckland office)	Mr. John Rattray < john.rattray@irsinz.com >
South Africa	All regions			SACD (Cape Town)	Mr.Hannes Mundey < hmundey@sacd.co.za >
Europe	All regions	Daikin Europe N.V. (DENV)	Mr.Luc Meulemeester < fqs.spareparts@daikineurope.com >	Contrepair srl. (La Spezia)	Mr.Antonio Puglia < apuglia@contrepair.it >
America	North America	Daikin U.S. Corporation (DUS)	Ms.Melody < duslaparts@earthlink.net >	Hiway Refrigeration Ltd. (Vancouver)	Mr. Roger Christensen < rchristensen@hiwayrefrigeration.com >
	Latin America			Global Parts Supply, Inc. (Panama)	Mr. Americo Tejada < gpspty@gmail.com >
	South America			Servicios Integrados de Transportes S.A. (Santiago)	Mr.Andres Catalan < acatalan@sitrans.cl >
				Comislend S.A. (Montevideo)	Ms. Lisel Casal Mr. Javier Casal < comercial.uy@lao-er.com >

Reefer Parts Supply System

[Dedication to Customers with QUICK, RELIABLE and KINDLY actions]

Target : Delivery **within 24 hours** **(Inventory parts)**
within 5-working days **(All parts)**

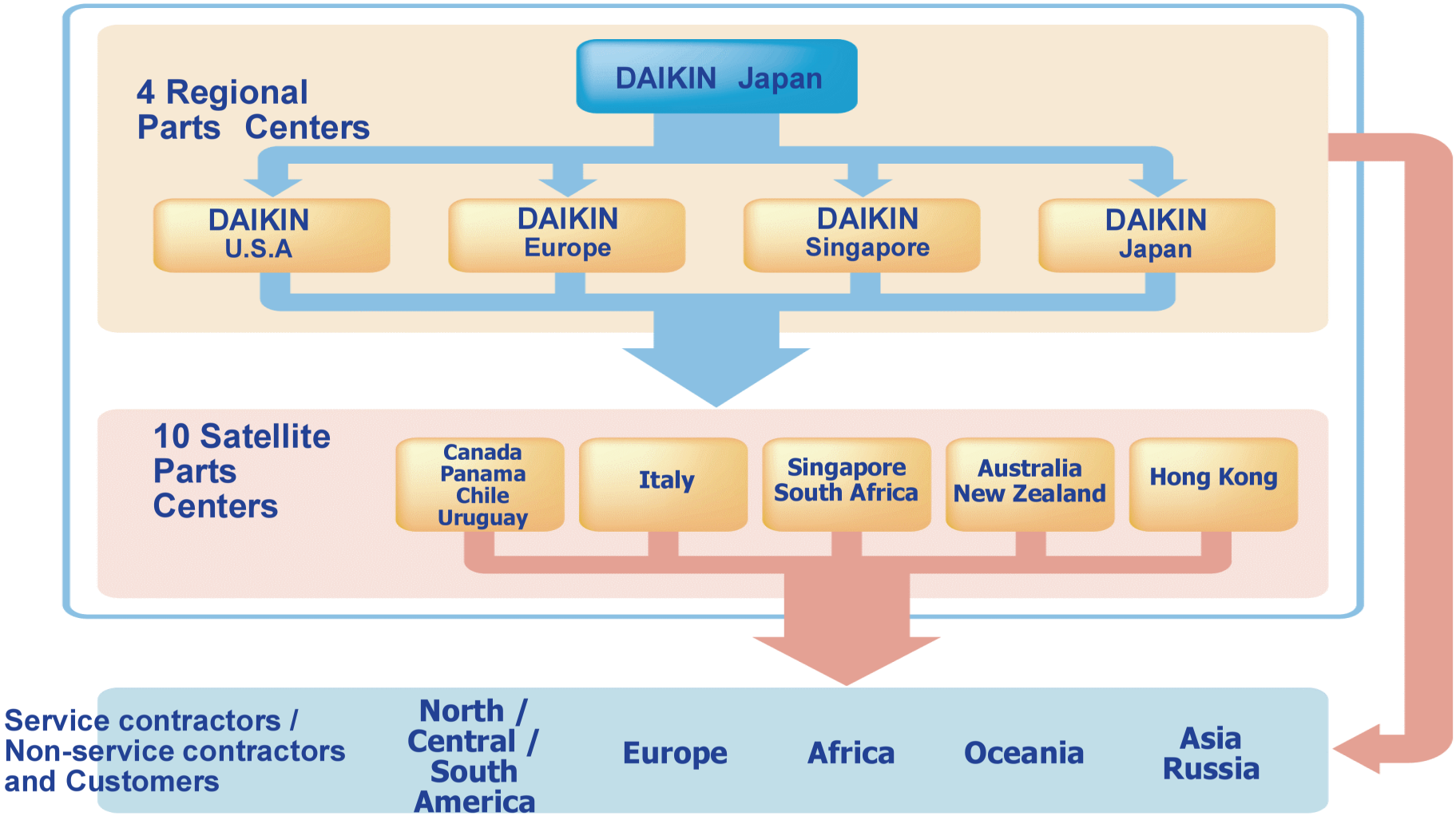

Daikin Reefer Service Offices

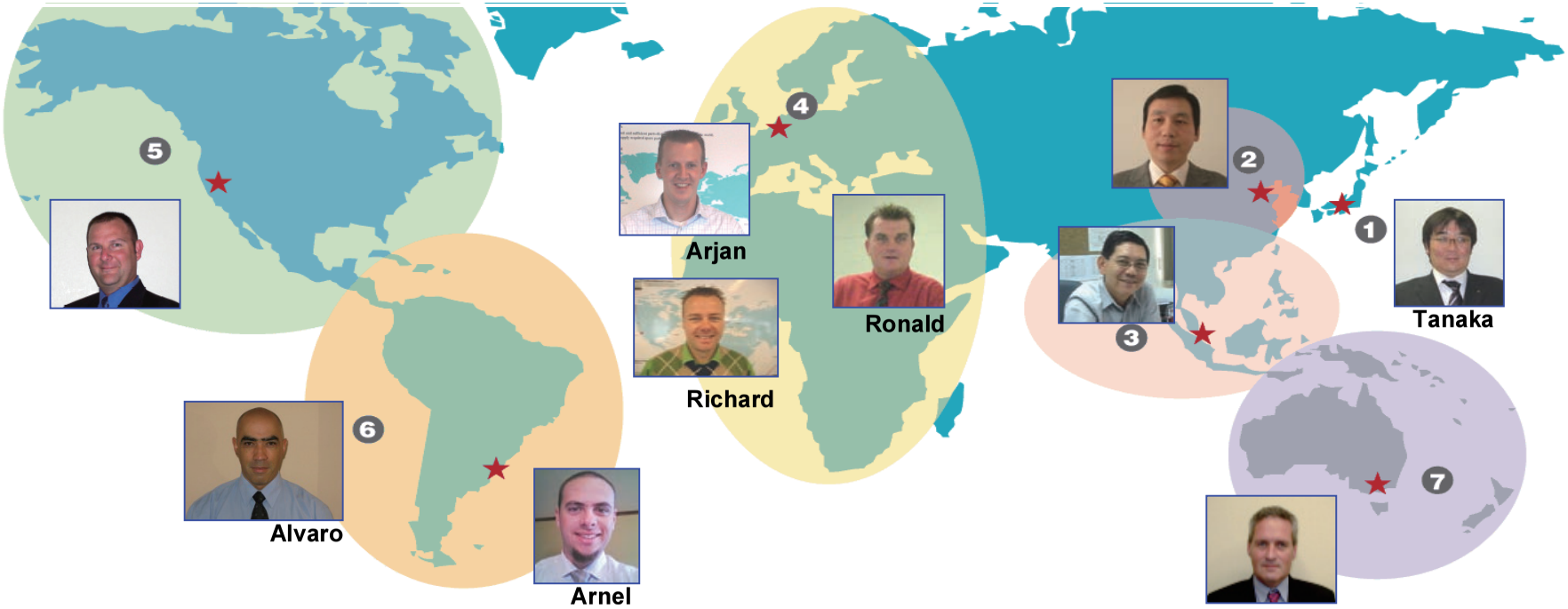

		Location	Region	Person in charge	Email
①	**Daikin Industries, Ltd.**	Osaka	Japan Korea, Vladivostok	Mr. Shinobu Tanaka	svc.ref-field@daikin.co.jp
②	**Daikin China Office**	Shanghai	China	Mr. Ma Wei (Mike)	ma.w ei@daikin.net.cn
③	**Daikin Asia Office**	Singapore	Asia,China	Mr. Goh Choon Leng	goh.choonleng@grp.daikin.co.jp
④	**Daikin Europe/Africa Office**	Rotterdam	Europe/Africa	Mr. Arjan Bezemer Mr. Richard Boshuijer Mr. Ronald Van Andel	daikineu@xs4all.nl daikineu2@xs4all.nl rvadaik@xs4all.nl
⑤	**Daikin N-Amrica Office**	California	North America	Mr. Jon Pulliam	reefteck12@cs.com
⑥	**Daikin Latin America Office**	Montevideo	Latin America	Mr. Alvaro Quintana Mr. Arnel Nunez	alvaro.quintana@adinet.com.uy arnel.nunez@adinet.com.uy
⑦	**Daikin ANZ Office**	Melbourne	Australia & NZ	Mr. Neil Hoare	nhoare@daikin.net.au

OUTLINE & CONSTRUCTION

2

What's new LXE10E100 or later(DECOS3e) compare to LXE10E-A(DECOS3d)

No	Item		LXE10E100 or later	LXE10E-A		Remarks
1	Service manual /Supplement manual (English version)		TR08-03/STR08-11	TR01-09C/STR08-04		
2	Cooling capacity & (Power consumption)	at 50/-30 deg.C, Outdoor/Indoor temp.	3100W (7900W)	Non publish (Non publish)		* Published capacity at 50/-30 deg.C requested by European shipping lines. * Pre-published capacity at 48/-18 deg.C before ISO revision * Reduced capacity at 38/-18 and 38/-2 deg.C to guarantee cooling capacity at 50/-30 deg.C.
		at 45/-18 deg.C, Outdoor/Indoor temp.	5300W (8300W)	Non publish (Non publish)		
		at 38/-18 deg.C, Outdoor/Indoor temp.	5900W (7500W)	6300W (7200W)		
		at 38/-2 deg.C, Outdoor/Indoor temp.	10000W (11300W)	10500W (11200W)		
3	Model name		DECOS3e	DECOS3d	DECOS3c	
		Equipped with air cooled condenser	LXE10E100 or later	LXE10E-A	LXE10E-A	
		Equipped with air cooled & water condensers	LXE10E100E101A LXE10E100E102A	LXE10E-1	-------	
		Example	LXE10E101A LXE10E105A LXE10E132A	LXE10E-1 LXE10E-A5 LXE10E-A32		
4	Spec. changes related to guarantee cooling capacity at 50/-30 deg.C	Size of Capillary tube on economizer line	1.8mm dia.×400 L	1.6mm dia.×450 L		Increased injection flow amount
		Judgement with liquid/moisture indicator in frozen operation	Normal if full at RS<approx. 0 deg.C Shortage if flashing at RS<approx. 0 deg.C	Nornal if full at RS<approx. -10 deg.C Shortage if flashing at RS<approx. -10 deg.C		
5		R134a charged amount	5.2kg	4.6kg/LXE10E-A before 2007/2 4.8kg/LXE10E-A after 2007/3 5.4kg/10E-1		
6		ISV ON/OFF control for liquid injection				

	Frozen & Pull-Down			Capacity control in chilled
	AMBS<40℃		AMBS>40℃	
	RS<=0℃	RS>0℃		
ISV ON	DCHS>120℃	DCHS>125℃	AON/OFF depend. on MBS、RS	DCHS>113℃
ISV OFF	DCHS<110℃	DCHS<118℃		DCHS<108℃

	Frozen & Pull-Down		Capacity control in chilled
	RS<=0℃	RS>0℃	
ISV ON	DCHS>120℃	DCHS>128℃	DCHS>113℃
ISV OFF	DCHS<103℃	DCHS<118℃	DCHS<108℃

		Valve body	* One body with direct driven * Valve lift 2.9mm for full open	* Two bodies with gear driven * Valve lift 0.7mm for full open		

7	Electronic Expantion Valve	Motor coil	＊500 pulse for full open ＊46+-3 Ohme/phase ＊Sealed with 2 O-rings between Coil body and valve body	＊2000 pulse for full open ＊150+-15 Ohme /phase ＊Sealed with silicon sealant and locktite around flare nut and inside screw	
		Gas flow Inlet - Outlet	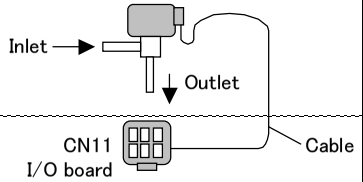	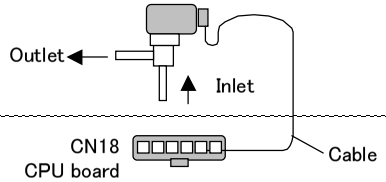	
		Connector shape			
		Interchangeability	Not interchangeable (Each connector shape to CPU board differs to avoid miss-connection)		
8	Suction Modulation Valve	Initial movement whent power ON	Full close first and full open 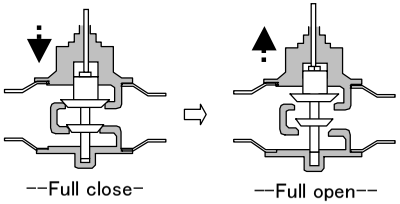	Full open 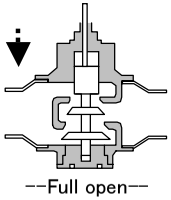	
		Motor coil	＊328 pulse for full open ＊113 Ohme/phase		
		Valve body	＊Valve lift 3.2mm for full open ＊Nozzle dia. 27mm & 26mm 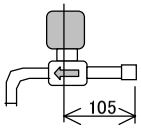	＊Valve lift 3.4mm for full open ＊Nozzle dia. 25mm & 24mm 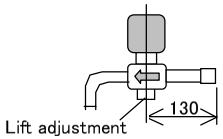	
		Interchange-ability: Motor coil	Interchangeable (No change)		
		Interchange-ability: Valve body	Not interchangeable (Each length of inlet pipe differs to avoid miss-mounting)		
8	Controller	Controller type (Software version)	DECOS3e (25 series)	DECOS3d (24 series) for LXE10E-1 DECOS3d (24 series) for LXE10E-A -- Before 2005/7 DECOS3c (23 series) for LXE10E-A -- After 2005/8 DECOS3b (22 series) for LXE10D	
		Memory stock: Initial setting data	Stored in CPU board (SRAM) and in Display boad	Stored in CPU board (SRAM) only	
		Memory stock: PTI, Alarm, USDA data	in CPU board (Flash memory)	in CPU board (SRAM)	
		Memory stock: TRIP, EVEVT data	in CPU board (Flash memory)	in CPU board (Flash memory)	
		Terminal board	Combined to CPU & I/O board	Individual	

		Construction	PC board for SMV	Combined to CPU & I/O board	Individual	
			PC board for rechageable battery	Combined to CPU board	Individual	
			PC board for back light	Combined to CPU board	Individual	
			Noise filter for Modem	Combined to CPU board	Individual	
			Fixing	Fixed wite 5 screws	Movable with 2 hinges	
		Initial setting after controller replacement		No needed (The "Initial setting data" is transemitted to CPU board from display board previously installed the memory.)	Needed	
		Interchangeability, (DECOS3e to previous models)		YES, however spare parts for DECOS3d is specially desinged with additional modification for previous models.		
9	Alarm	F603		Initial setting error (Decos3"d" for 10E100 or later.)	Initial setting error (Decos3"b" for 10E-A.)	
		F111		Comunication error between CPU and I/O board.	Existed but nonsense alarm (See remarks)	"F111: HPS does not activate when it reaches to the set value" described in service manual of 10E-A was actually nonsense. Because of F111 came out when ---
		E801		Lithium battery empty equipped on CPU	None The battery empty can not be noticed until seeing down-loaded data.	
10	Panel indication	Residual voltage ***V indication for wake up battery	When power ON (Sensor indication mode)	「bAT***V」	None	
				[***V] in the [bAT***V] brinks during charging	None	"Blinking" is to notice that voltage indication during charging is higher than no-charging.
			Power OFF (Battery mode)	「bAT***V」	None	
			Rechageable battery	Panel indication Above 7.6V: Full charge --(Green) Below 7.6V: Recheck after charging for 14hrs (rechageable battery)--(Yellow) Below 7.2V: Replace --(Red)	By check botton with Red & Green LED	
			Dry battery		None	
		Container I.D. (Sensor indication mode)		Ex: LED "I.d-C" >> "DILU" LCD "Id-n" >> "1234567"	None	Requested by Sales div.
		Software version (Battery mode)		Ex: LCD "VER2500"	None	Requested by Sales div.
		Short circuit connector SCC 3 for phase correction		Attached	Inserted (Screw type terminal board) Attached (Connector type terminal board)	

11	Emergency operation	EV opening adjustment	Emergency cap Emergency magnet	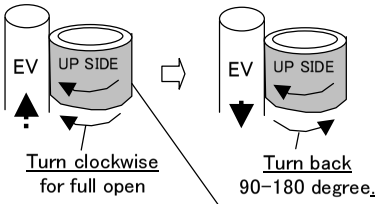	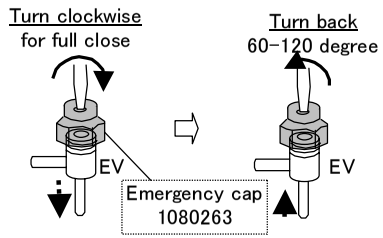	We officially recommend to use new emergency magnet ,yellow color, for 10E+++. However if they don't have it, silver one 1270630 , can be temporally used for 10E+++ as follows. [Touch silver one upside-down to SMV and turn clockwise for full open, as well as EV.]
		SMV opening adjustment for full open	Emergency magnet	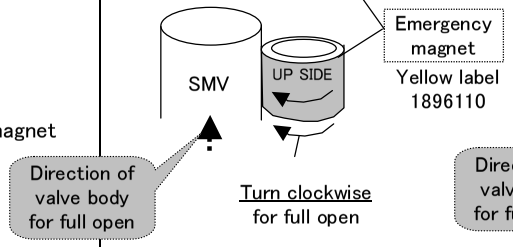	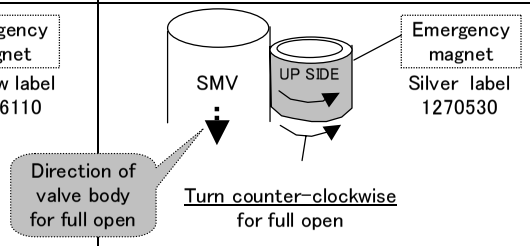	When valve fully opened or closed, the inside driving magnet will be inactive and the emergency magnet can be removed. 旧EVは先ず全閉させるのに、新EVは全開するのは何故か？　答:新SMV用マグネットを共用するため。
			dip switch	None	Equipped on SMV board	
12	DCCS (Version 8.0)	Memory capacity for TRIP DATA		Min. 2 years (Log. Interval 60min.)	Min. 1.5 years (Log. Interval 60min.)	
		Down loading hours (TRIP、EVENT)		6 min.	16min. 33 seconds	
		Wake-up function by battery mode after power OFF for trip data and USDA data		5 days/120 hr for 5 shipping lines (MSL,CGM,H-Sud,Zim,.APL)	3 days/72 hr for 6 shipping lines (MSL,CGM,H-Sud,Zim,.APL,Hapag L.)	Requested by Sales div.
		PTI data		6 reports (Max. 12 reports) * Success data only * stored in flash memory	2 reports * Including NG data * stored in SRAM	Requested by Sales div.
		Software version number		in All reports	in PTI report only	Requested by Sales div.
		Serial number of controller		in All reports	None	* Serial no. is requested for USDA report by PPECB regulation. * E801 for lithium battery empty comes up as the memory in SRAM disappeared.
		Calibrated date and the calibrated value for USDA sensors		in USDA report in Trip report (in EVENT)	in USDA report only	Requested by Sales div.
		Application of DCCS8.0 and the former DCCS7.1		DCCS8.0 can be performed for LXE10E100 or later (The former DCCS7.01 is not performed.)	Either DCCS8.0 or the former DCCS7.01 can be performed for previous models	

Specification Differences for LXE10E100 or later with DECOS3e　　仕様比較（DECOS3e搭載のLXE10E100以降）

MODEL NAME 機種名	Controller	Condesnser	Wake up battery	PC port		RM 4P receptacle	VOD (FA Sensor) connected to	USDA Receptacles			Defumification control with REHEAT coil	Temperature recorder	CA Trans Fresh		ZFT No.	
				Type	Location			Type	Numbers	Location						
LXE10E101A2	DECOS3e	Air cooled & Water cooled						C/R	4	Inside upper	Yes	No	No			
LXE10E102A2	DECOS3e	Air cooled & Water cooled	Rechargeable	5P	Inside & Outside	Yes	No	C/R	4	Inside upper	Yes	No	with 2 injection ports for CA		102A 0860	
LXE132A1	DECOS3e	Air cooled	Rechargeable	5P	Inside & Outside	No	Upper ventilator	C/R	4	Inside upper	Yes	No	No		132A1 086050A	
LXE133A1	DECOS3e	Air cooled	Rechargeable	5P	Inside & Outside	No	Upper ventilator	C/R	4	Inside upper	Yes	No	No			
LXE135A1	DECOS3e	Air cooled	Rechargeable	3P	Outside	No	No	DIL	3	Inside lower	No	Yes	No		135A1 086029D	
LXE136A1	DECOS3e	Air cooled	Rechargeable	5P	Inside & Outside	No	No	C/R	4	Inside upper	Yes	No	No		136A1 086038C	
LXE144A1	DECOS3e with back light	Air cooled	Dry type	3P	Outside	Yes	Upper ventilator	DIL	3	Inside lower	Yes w/o RH sensor	Yes	No		144A1 086036B	
LXE145A1	DECOS3e	Air cooled	Dry type	5P	Inside & Outside	No	No	C/R	4	Inside upper	Yes	No	No		145A1 086049A	

Specification Differences for LXE10E-A,10E-1 with DECOS3d **仕様比較（DECOS3d搭載のLXE10E-A,10E-1）**

MODEL NAME 機種名	Controller	Condenser	Wake up battery	PC port		RM 4P receptacle	VOD (FA Sensor) connected to	USDA Receptacles			Defumification control with REHEAT coil	Temperature recorder	CA Trans Fresh		ZFT No.	
				Type	Location			Type	Numbers	Location						
LXE10E-1 LXE10E-1A-1E	DECOS3d	with Air cooled & Water cooled	Rechargeable	5P	Inside & Outside	No	Lower ventilator	C/R	4	Inside upper	Yes	No	No			
LXE10E-A5C-A5F	DECOS3d	with Air cooled	Dry type	3P	Outside	Yes	No	DIL	3	Inside lower	No	Yes	No		A5D 066003B	
LXE10E-A9B-A9C	DECOS3d	with Air cooled	Dry type	3P	Outside	Yes with 3 fuses	No	No	No	No	No	Yes	No		A9C 076021A	
LXE10E-A12C-A12F	DECOS3d	with Air cooled	Dry type	D-Sub	Cont. box cover	Yes	No	No	No	No	No	Yes	No		A12E 066002C	
LXE10E-A15C -A15J	DECOS3d	with Air cooled	Rechargeable	5P	Inside & Outside	No	No	C/R	4	Inside upper	Yes	No	No		A15J 076046F	
LXE10E-A15BR LXE10E-A15GR	DECOS3d	with Air cooled	Rechargeable	5P	Inside & Outside	No	No	C/R	4	Inside upper	Yes	No	No		A15GR 066042B	
LXE10E-A18B-A18D	DECOS3d with back light	with Air cooled	Dry type	3P	Inside & Outside	Yes	No	DIL	3	Inside lower	Yes w/o RH sensor	Yes with reccargeable battery	No		A18D 066041H	
LXE10E-A19A	DECOS3d	with Air cooled	Dry type	3P	Outside	Yes with 3 fuses	No	No	No	No	No	Yes	No		A19A 056049A	
LXE10E-A21B-A21D	DECOS3d	with Air cooled	Dry type	3P	Outside	Yes	No	DIL	4	Inside lower	No	No	No		A21D 076063	
LXE10E-A23-A23C	DECOS3d	with Air cooled	Dry type	5P	Inside & Outside	No	No	C/R	4	Inside upper	No	No	No		A23B 066015B	1.G set 12KV (Initial setting) 2.Fjare connection for manifold hose 3.with low press. Gauge
LXE10E-A26B-A26E	DECOS3d	with Air cooled	Dry type	3P	Outside	No	No	C/R	3	Inside lower	Yes	Yes	No		A26E 076045D	
LXE10E-A27B	DECOS3d	with Air cooled	Rechargeable	5P	Inside & Outside	No	No	C/R	4	Inside upper	Yes	No	Yes		A27B 076046F	
LXE10E-A29A	DECOS3d	with Air cooled	Dry type	3P	Outside	Yes	No	DIL	3	Inside lower	No	No	No		A29A 056055E	
LXE10E-A31A-A31B	DECOS3d	with Air cooled	Rechargeable	5P	Inside & Outside	No	No	C/R	4	Inside upper	Yes	No	Yes		A31B 056045G	
LXE10E-A32A-A32B	DECOS3d	with Air cooled	Rechargeable	5P	Inside & Outside	No	Upper ventilator	C/R	4	Inside upper	Yes	No	No		A32B 076058	
LXE10E-A33-A33A	DECOS3d with back light	with Air cooled	Rechargeable	5P	Inside & Outside	No	No	C/R	4	Inside upper	Yes	No	No		A33A 066058H	
LXE10E-A35-A35B	DECOS3d	with Air cooled	Rechargeable	3P	Outside	No	No	DIL	3	Inside lower	No	Yes	No		A35B 076002B	
LXE10E-A36-A36A	DECOS3d	with Air cooled	Rechargeable	5P	Inside & Outside	Yes	No	C/R	4	Inside upper	Yes	No	No		A36A 076061	
LXE10E-A37	DECOS3d	with Air cooled	Dry type	5P	Outside	Yes	No	No	No	No	No	No	No		A29A 056055E	
LXE10E-A40-A40A	DECOS3d	with Air cooled	Dry type	3P	Outside	Yes wuth 3 fuses	No	No	No	No	No	Yes	Yes		A40 066064C	
LXE10E-A41	DECOS3d	with Air cooled	Rechargeable	5P	Inside & Outside	Yes wuth 3 fuses	No	C/R	4	Inside upper	Yes	No	No		A41 076037F	
LXE10E-A43	DECOS3d	with Air cooled	Rechargeable	5P	Inside & Outside	No	Upper ventilator	C/R	4	Inside upper	Yes	No	No		A43 076049B	
LXE10E-A44	DECOS3d with back light	with Air cooled	Dry type	3P	Inside & Outside	Yes	Upper ventilator	DIL	3	Inside lower	Yes w/o RH sensor	Yes with reccargeable battery	No		A44 076050E	
LXE10E-A45	DECOS3d	with Air cooled	Dry type	5P	Inside & Outside	No	No	C/R	4	Inside upper	Yes	No	No		A45 076062B	1.G set 12KV (Initial setting)

Specification Differences for LXE10E-A with DECOS3c 仕様比較 その1 （DECOS3c組込のLXE10E-A）

MODEL NAME 機種名	Controller コントローラ	Wake up battery	PC port		RM receptacle (4P)	VOD (FA Sensor) connected to	USDA Receptacles			Defumification control with REHEAT coil 除湿用コイル	Temperature recorder 温度記録計	CA Trans Fresh		ZFT No.
			Type	Location			Type	Numbers	Location					
LXE10E-A4	DECOS3c	Dry type	3P	Outside	Yes	No	DIL	3	Inside lower	No	No	No		A4 016012E
LXE10E-A5-A5B	DECOS3c	Dry type	3P	Outside	Yes	No	DIL	3	Inside lower	No	Yes	No		
LXE10E-A6	DECOS3c	Dry type	D-Sub	Control box Cover	Yes	No	No	No	No	No	Yes	No		A6 016013E
LXE10E-A6R	DECOS3c	Dry type	D-Sub	Control box Cover	Yes	No	No	No	No	No	Yes	No		A12B 046027B
LXE10E-A12-A12B	DECOS3c	Dry type	D-Sub	Control box Cover	Yes	No	No	No	No	No	Yes	No		
LXE10E-A28	DECOS3c	Dry type	D-Sub	Control box Cover	Yes	No	DIL	3	Inside lower	No	Yes	No		A28 046032B
LXE10E-A7	DECOS3c	Dry type	3P	Outside	No	No	C/R	3	Inside lower	No	Yes	No		A7 016017E
LXE10E-A11	DECOS3c	Dry type	3P	Outside	No	No	C/R	3	Inside lower	No	Yes	No		A11 026027C
LXE10E-A20	DECOS3c	Dry type	3P	Outside	No	No	No	No	No	No	Yes	No		A20 036027C
LXE10E-A26-A26A	DECOS3c	Dry type	3P	Outside	No	No	C/R	3	Inside lower	Yes	Yes	No		A26A 046039A
LXE10E-A8	DECOS3c	Dry type	3P	Outside	Yes	No	No	No	No	No	Yes	No		A8 026003B
LXE10E-A9, A9R	DECOS3c	Dry type	3P	Outside	Yes	No	No	No	No	No	Yes	No		A9 026013C
LXE10E-A19	DECOS3c	Dry type	3P	Outside	Yes	No		4		No	Yes	No		A19 036018B
LXE10E-A5BR	DECOS3c	Dry type	3P	Outside	Yes	No				NO	Yes	No		
LXE10E-A14	DECOS3c	Rechargeable	5P	Inside & Outside	No	No	C/R	4	Inside Upper	Yes	No	No		
LXE10E-A15-A15B	DECOS3c	Rechargeable	5P	Inside & Outside	No	No	C/R	4	Inside Upper	Yes	NO	No		A15 036005
LXE10E-A5	DECOS3c	Dry type	3P	Outside	Yes	No	DIL	3	Inside lower	No	No	No		
LXE10E-A16	DECOS3c	Dry type	3P	Outside	Yes	No	DIL	3	Inside lower	No	NO	No		A16 026026C
LXE10E-A21	DECOS3c	Dry type	3P	Outside	Yes	No	DIL	4	Inside lower	No	No	No		A21 036033C
LXE10E-A29	DECOS3c	Dry type	3P	Outside	Yes	No	DIL	4	Inside lower	No	No	No		A29 046043B
LXE10E-A17-A17A	DECOS3c	Dry type	D-Sub	Control box Cover	Yes	No	DIL	3	Inside lower	No	Yes	No		A17A 056009B
LXE10E-A18-A18A	DECOS3c with back light	Dry type	3P	Inside & Outside	Yes	No	DIL	3	Inside lower	Yes w/o RH sensor	Yes	No		A18A 056016C
LXE10E-A30		Dry type	3P	Inside & Outside	Yes	No	DIL	3	Inside lower		Yes	Yes		A30 046049A
LXE10E-A21	DECOS3c	Dry type	3P	Outside	Yes	No				No	No	No		
LXE10E-A21A	DECOS3c	Dry type	3P	Outside	Yes	No				No	No	No		
LXE10E-A24R	DECOS3c	Dry type	3P	Outside	Yes	No				NO	Yes	No		
LXE10E-A15AR	DECOS3c	Rechargeable	5P	Inside & Outside	No	No	C/R	4	Inside Upper	Yes	No	No		
LXE10E-A15B	DECOS3c	Rechargeable	5P	Inside & Outside	No	No	C/R	4	Inside Upper	Yes	No	No		
LXE10E-A27-A27A	DECOS3c	Rechargeable	5P	Inside & Outside	No	No	C/R	4	Inside Upper	Yes	No	Yes		A27A 056001
LXE10E-A31	DECOS3c	Rechargeable	5P	Inside & Outside	No	No	C/R	4	Inside Upper	Yes	No	No		A30 046045D

DAIKIN

DAIKIN CONTAINER REFRIGERANTION UNIT

2008～
LXE10E100 or later

R134a

DECOS3e
Scroll Comp.
SMV Control, Chilled

Direct Driven Type
Electronic EV
Hot Gas Defrost

Auto. Pump Down
On Demand defrost

2002～
LXE10E-A
LXE10E-1

R134a

DECOS3d DECOS3c
Scroll Comp.
SMV Control, Chilled

Gear Driven Type
Electronic EV
Hot Gas Defrost

Auto. Pump Down
On Demand defrost

1998～2000
LXE10D

R134a

DECOS3b
Reciprocating Comp.
MV Control, Chilled

Gear Driven Type
Electronic EV
Hot Gas Defrost

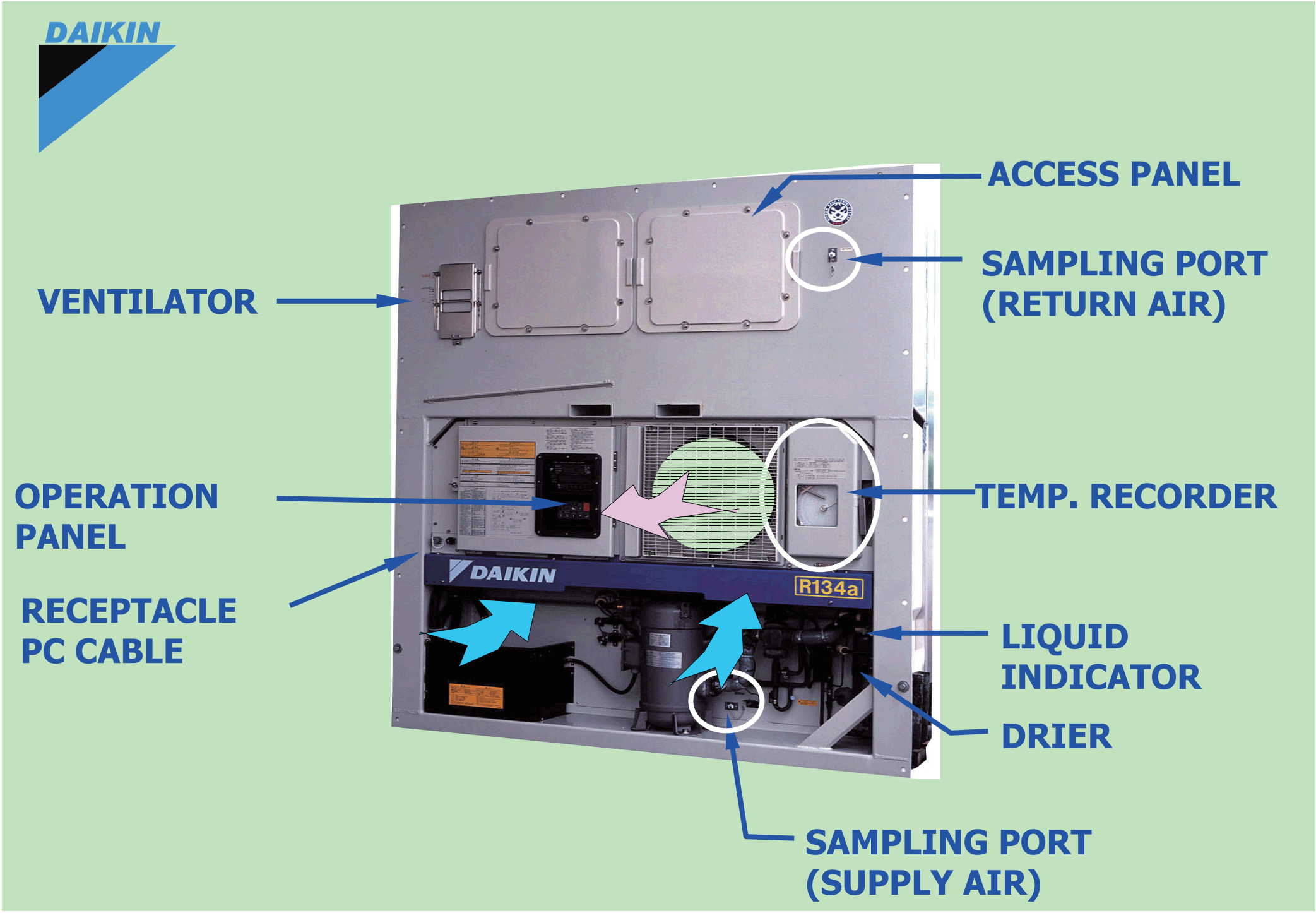
DAIKIN
ACCESS PANEL
SAMPLING PORT
(RETURN AIR)
VENTILATOR
OPERATION
PANEL
TEMP. RECORDER
RECEPTACLE
PC CABLE
LIQUID
INDICATOR
DRIER
SAMPLING PORT
(SUPPLY AIR)
DAIKIN
R134a

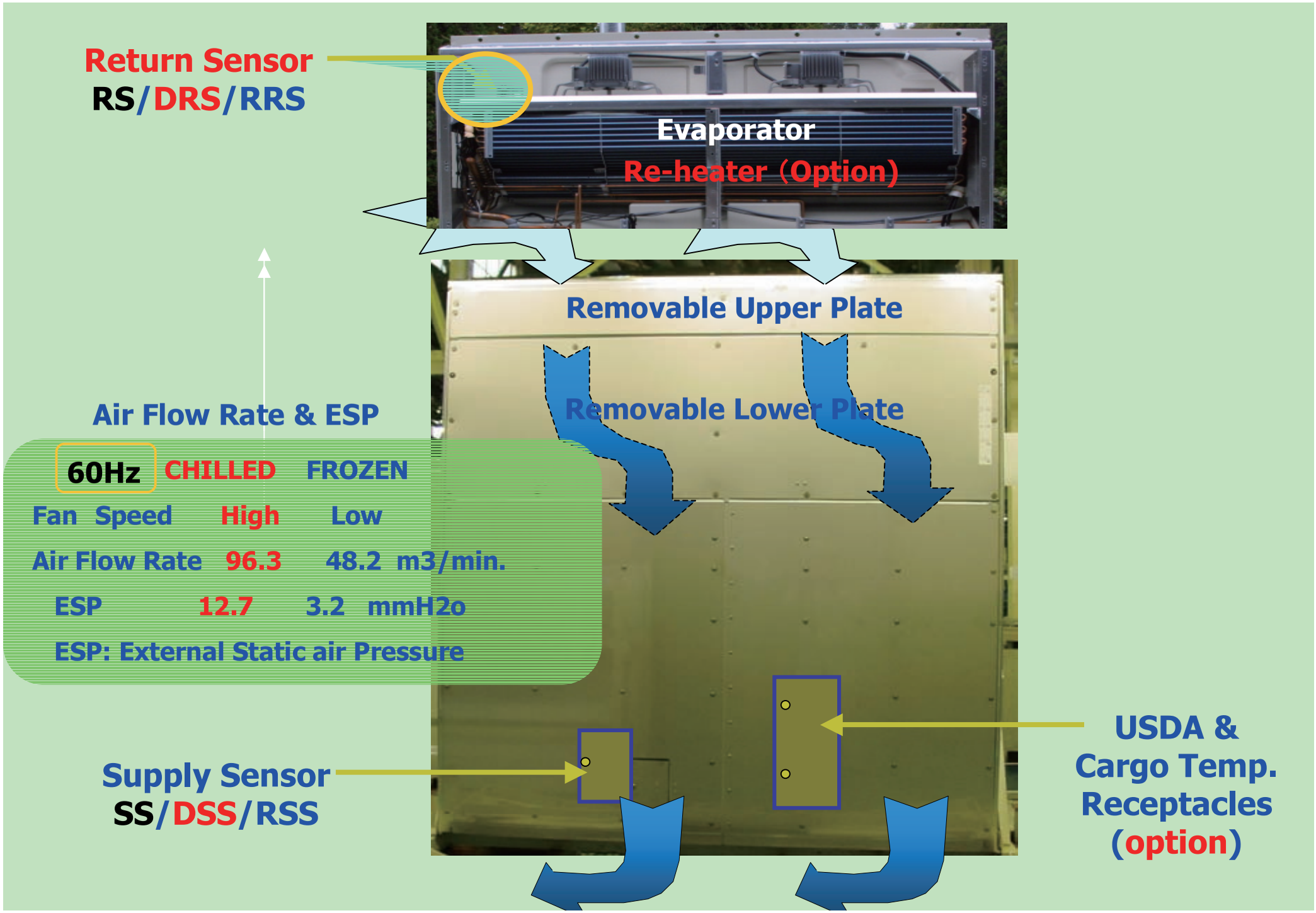
Return Sensor
RS/DRS/RRS
Evaporator
Re-heater (Option)
Removable Upper Plate
Removable Lower Plate
Air Flow Rate & ESP
60Hz CHILLED FROZEN
Fan Speed High Low
Air Flow Rate 96.3 48.2 m3/min.
ESP 12.7 3.2 mmH2o
ESP: External Static air Pressure
Supply Sensor
SS/DSS/RSS
USDA &
Cargo Temp.
Receptacles
(option)

DAIKIN

● OPERATION RANGE

*POWER SUPPLY 380,400,415V / 50Hz
440,460V / 60Hz

* INDOOR TEMP. -30 to +30 ℃
* OUTDOOR TEMP. -30 to +50 ℃

● 3 OPERATON MODES

Operation Mode	SET POINT	Control Temp.	Control Sensor Eva. Fan
CHILLED Mode	+30.0 to -9.9℃	SP ±0.5℃	Supply Air Sensor High Speed
FROZEN Mode	-10.0 to -30.0℃	SP 0+1.0℃	Return Air Sensor Low Speed
DEFROST Mode	HOT GAS DEFROST SYSTEM		Eva. Inlet Sensor Stop

Note : Some models have additional PARTIAL FROZEN Mode (SP -3.1 to -10.0).

DAIKIN

TECHNICAL INFORMATION

DAIKIN INDUSTRIES LTD
AFTER SALES SERVICE DIV.

Subject	COMPRESSOR CHAMBER
Model	LXE10E100 or later, LXE10E-A

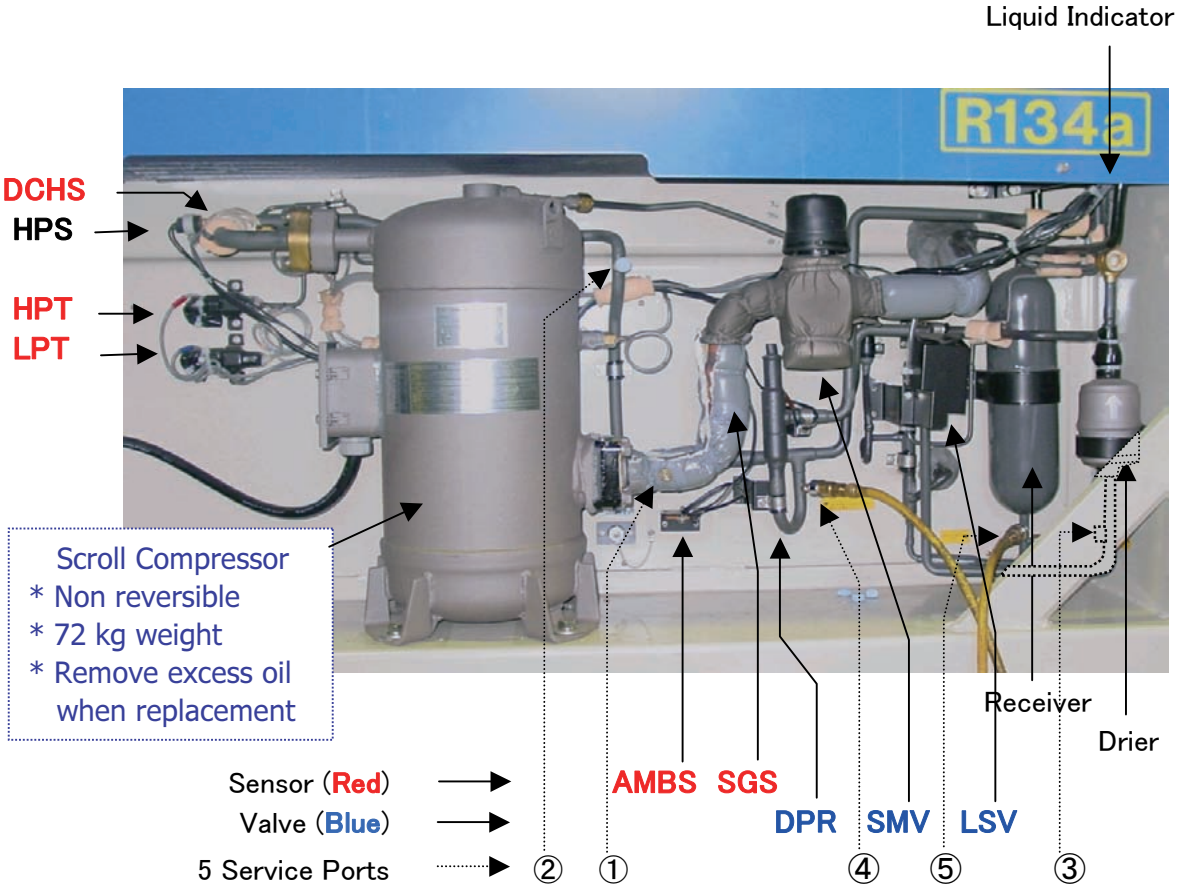

[Sensor]	[Valve]
AMBS: AMBient air temp. Sensor	DPR: Discharge Pressure Regulator
DCHS: DisCharge gas temp. Sensor	LSV: Liquid Solenoid Valve
HPS: High Pressure Switch	SMV: Suction Modulation Valve
HPT: High Pressure Transducer	
LPT: Low Pressure Transducer	
SGS: Suction Gas temp. Sensor	

DAIKIN

TECHNICAL INFORMATION

DAIKIN INDUSTRIES LTD
AFTER SALES SERVICE DIV.

Subject	CAUTION LABELS
Model	LXE10E100 or later, LXE10E-A, LXE10E-1

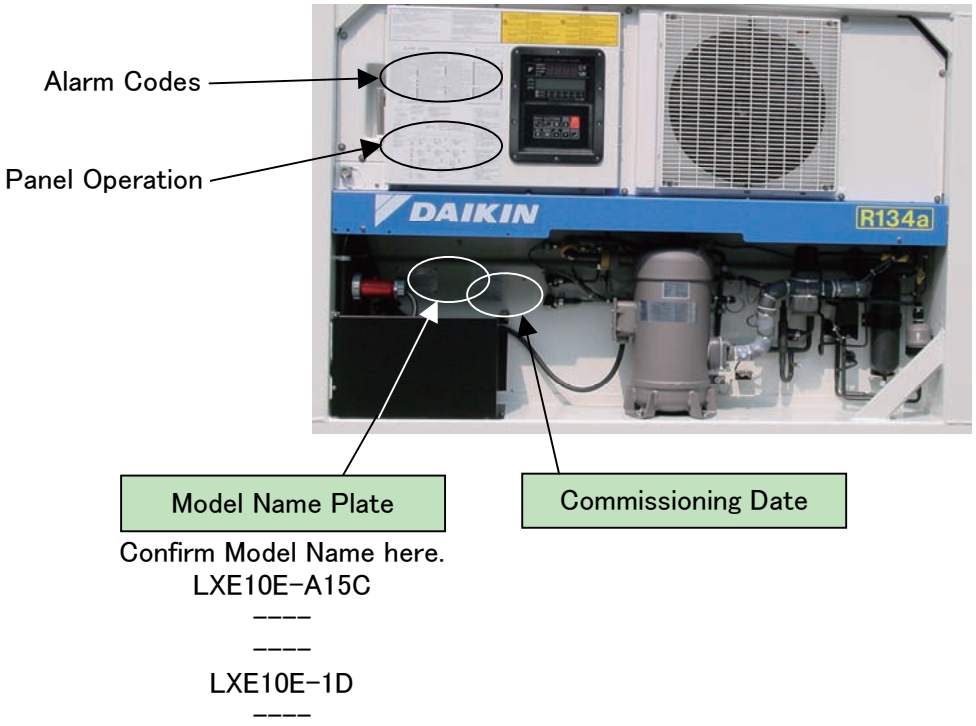

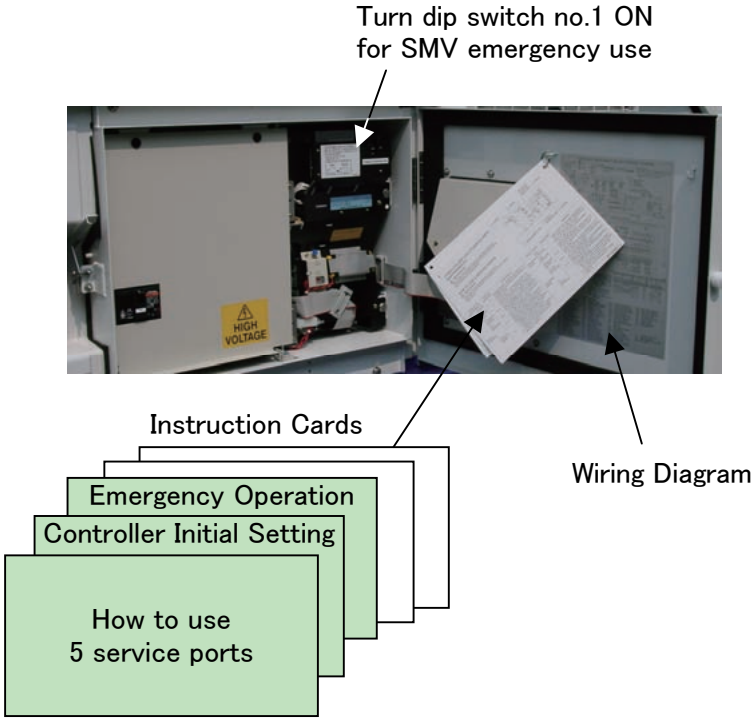

DAIKIN

TECHNICAL INFORMATION

DAIKIN INDUSTRIES LTD
AFTER SALES SERVICE DIV.

Subject	VALVE CHAMBER
Model	LXE10E100 or later, LXE10E-A

● **LXE10E100 or later**

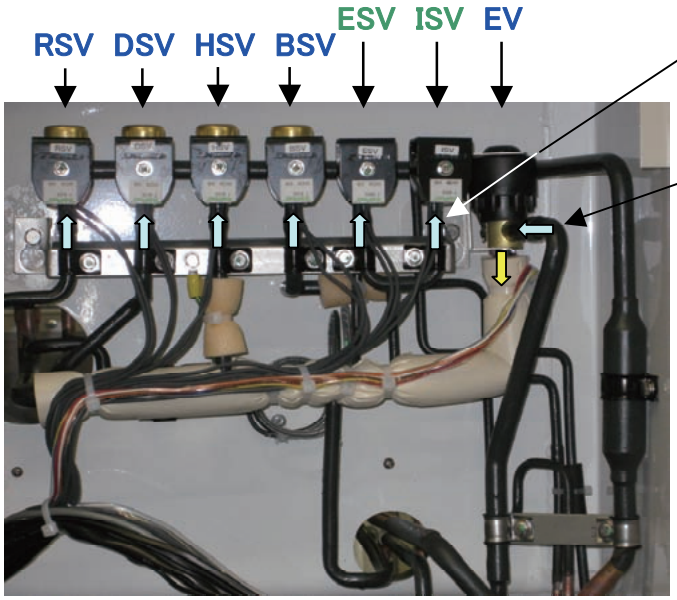

[All SV]
Inlet from bottom
Outlet to rear

[EV]
Inlet from front
Outlet to bottom

	Body	Coil
LSV BSV HSV DSV RSV	3/8" 2 way 09454566	0955287
ISV ESV	1/4" 2 way 0088738	

● **LXE10E-A** since Dec. 2004

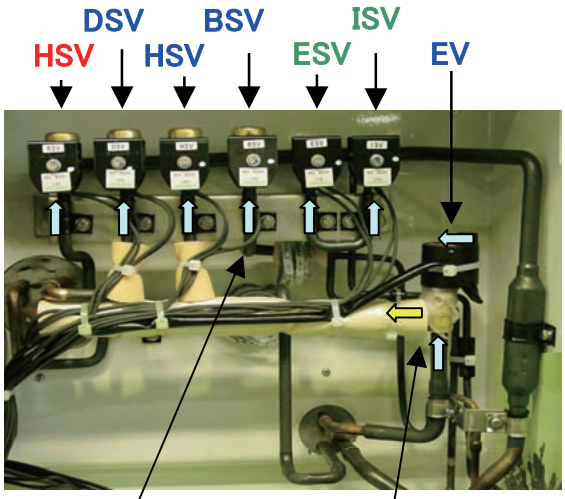

[All SV]
Inlet from bottom
Outlet to rear

[EV]
Inlet from bottom
Outlet to front

● **LXE10E-A** before Nov. 2004

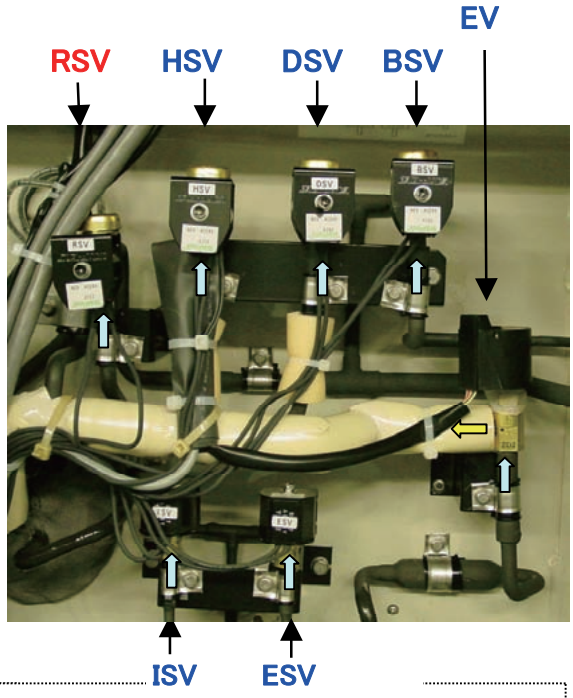

BSV: Bypass Solenoid Valve
DSV: Defrost Solenoid Valve
DPR: Discharge Pressure Regulator
EV: Electronic Expansion Valve
ESV: Economizer Solenoid Valve

ISV: Injection Solenoid Valve
LSV: Liquid Solenoid Valve
RSV: Reheater Solenoid Valve(Option)
TEV: Thermostatic Expansion Valve(LXE10E-1)

DAIKIN

TECHNICAL INFORMATION

DAIKIN INDUSTRIES LTD
AFTER SALES SERVICE DIV.

Subject	INDOOR
Model	LXE10E100 or later, LXE10E-A, LXE10E-1

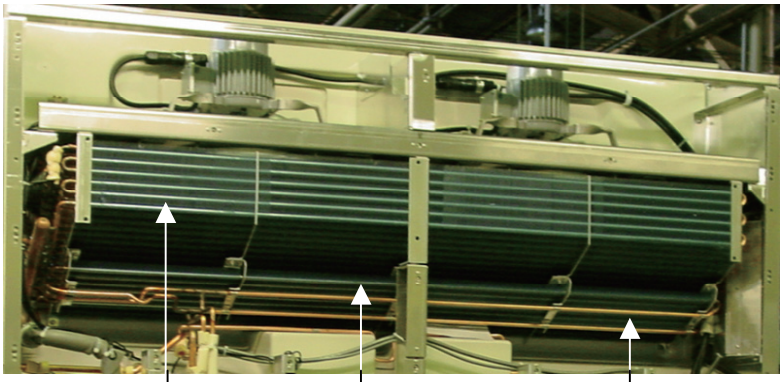

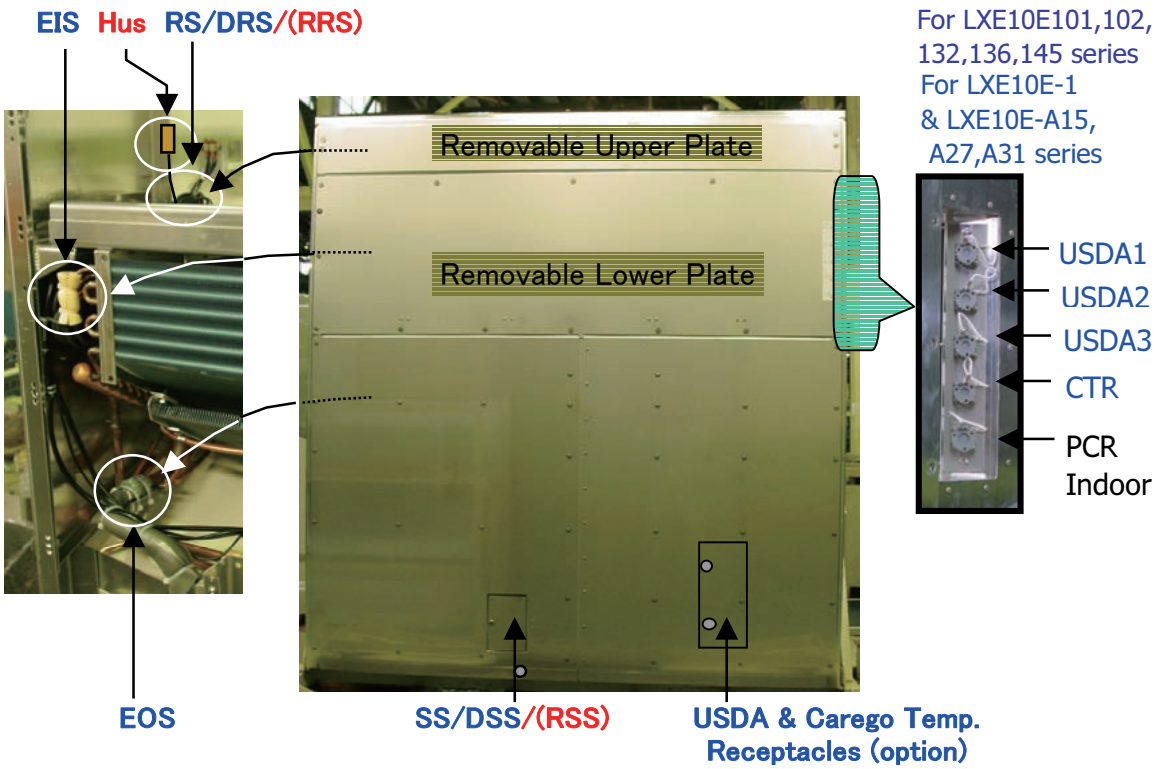

[Sensor]

CTR: Cargo Temperature Receptacle (option)
DRS: Return Air Temperature Sensor for Datacorder
DSS: Supply Air Temperature Sensor for Datacorder
EIS: Evaporator Inlet Pipe Temperature Sensor
EOS: Evaporator Outlet Pipe Temperature Sensor
HuS: Humidity Sensor (option)
RS: Return Air Temperature Sensor
RRS: RS for Temperature Recorder
SS: :Supply Air Temperature Sensor
RSS: SS for Temperature Recorder
USDA1: USDA Receptacle 1 (option)
USDA2: USDA Receptacle 2 (option)
USDA3: USDA Receptacle 3 (option)

DAIKIN

TECHNICAL INFORMATION

DAIKIN INDUSTRIES LTD
AFTER SALES SERVICE DIV.

Subject	CONTROL BOX & CONTROLLER INSIDE
Model	LXE10E100 or later

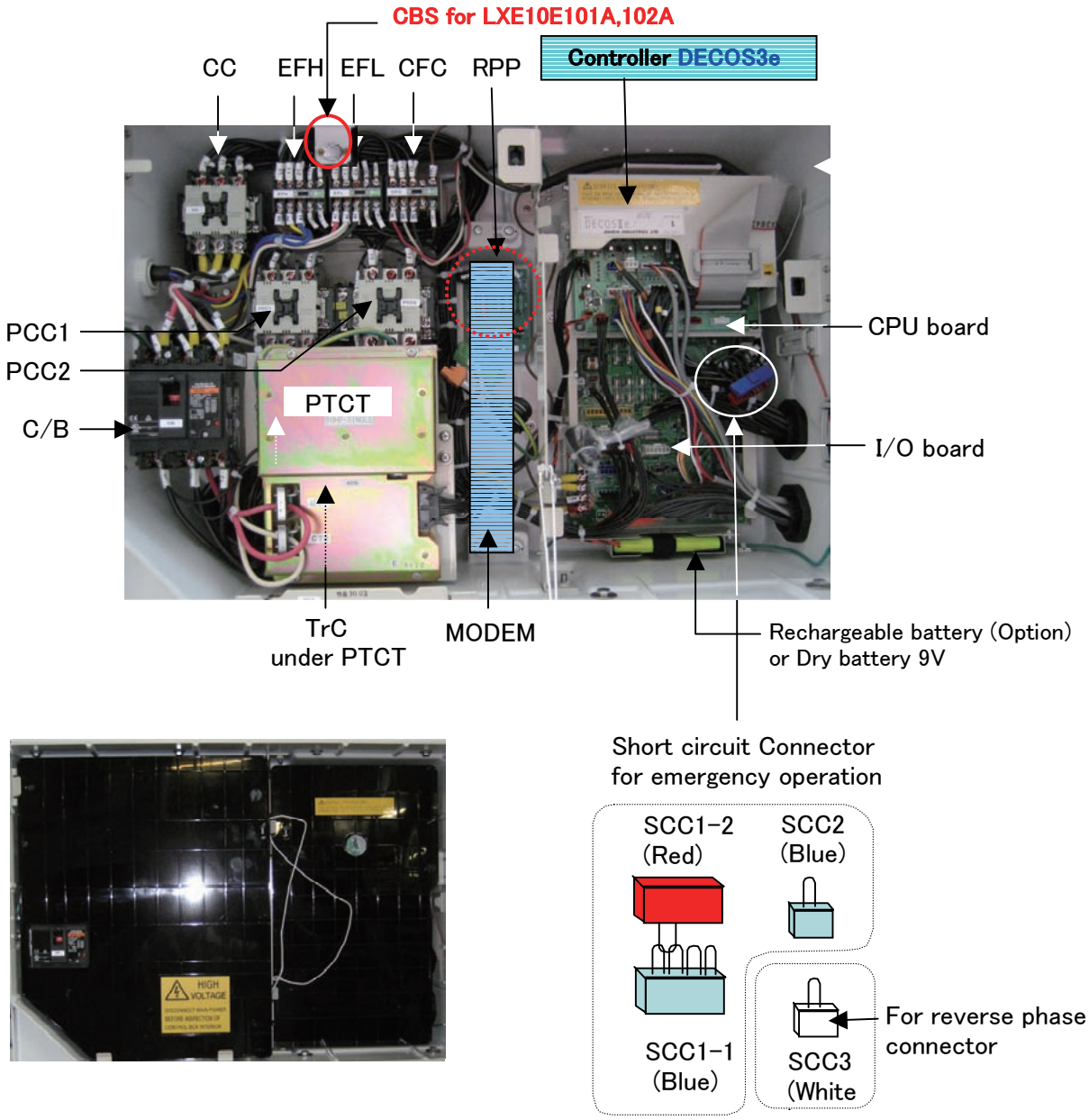

BAT: Back-up Battery (9V)
CC: Magnetic Contactor, Compressor
CFC: Magnetic Contactor, Condensor Fan Motor
CBS: Control Box air temperature Senser
C/B: Circuit Breaker
EFH: Magnetic Contactor, EFM-High Speed
EFL: Magnetic Contactor, EFM-Low Speed
PCC1: Phace Correction Contactor 1
PCC2: Phace Correction Contactor 2
PPR: PC Port Receptacle
PTCT: PTCT Board
RPP: Reverse Phace Protector
TrC: Transformer (400V⇒24V,13V)
VOD: Ventilation Opening Detector

Subject	CONTROL BOX & CONTROLLER INSIDE
Model	LXE10E-A, LXE10E-1

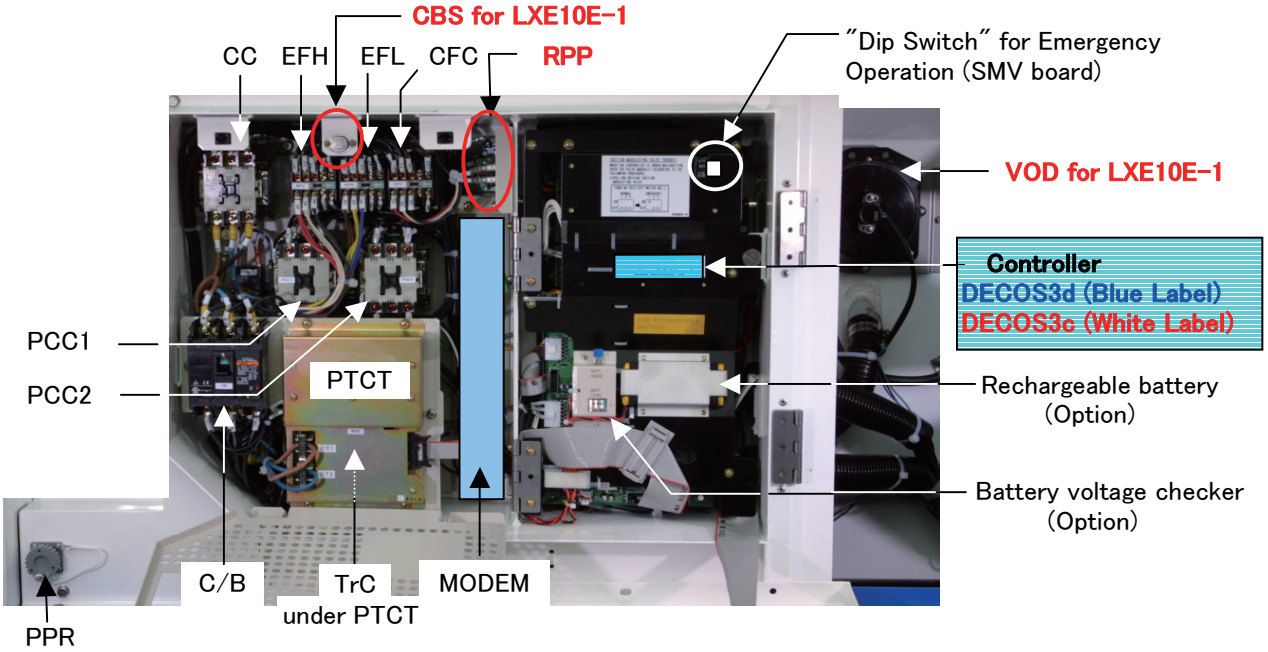

[CONTROLLER INSIDE]

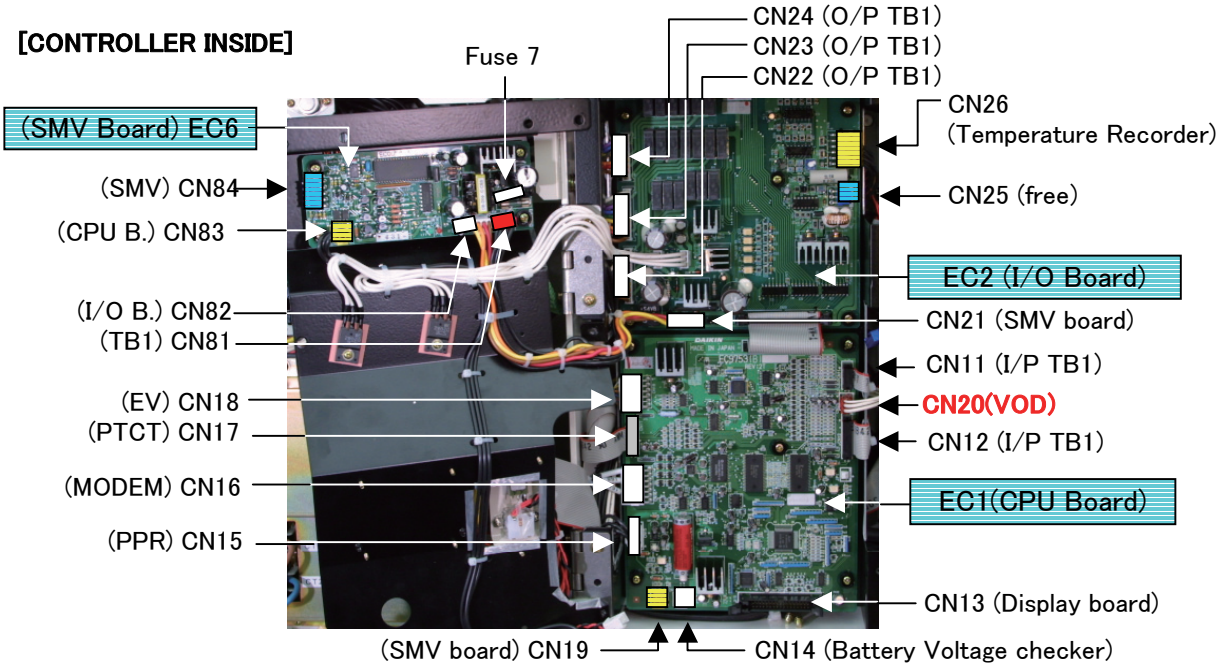

BAT: Back-up Battery (9V)
CC: Magnetic Contactor, Compressor
CFC: Magnetic Contactor, Condensor Fan Motor
CBS: Control Box air temperature Senser(LXE10E-1)
C/B: Circuit Breaker
EFH: Magnetic Contactor, EFM-High Speed
EFL: Magnetic Contactor, EFM-Low Speed
PCC1: Phace Correction Contactor 1
PCC2: Phace Correction Contactor 2
PPR: PC Port Receptacle
PTCT: PTCT Board
RPP: Reverse Phace Protector
TrC: Transformer (400V⇒24V,13V)
VOD: Ventilation Opening Detector

Subject	Connection from/to Controller DECOS3e
Model	LXE10E100 or later

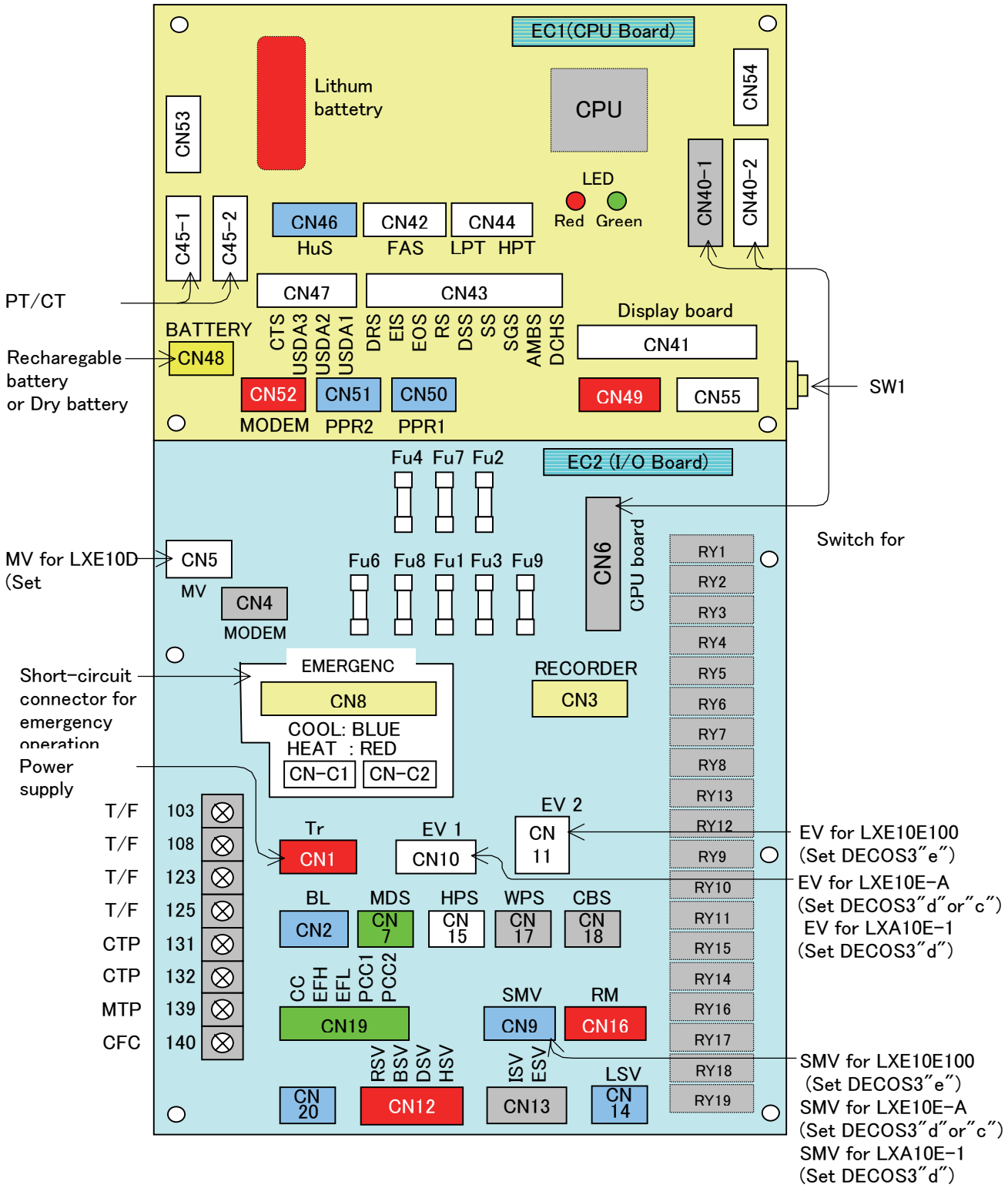

DAIKIN

TECHNICAL INFORMATION

DAIKIN INDUSTRIES LTD
AFTER SALES SERVICE DIV.

Subject	TERMINAL BOARD (Connector type since May 2006)
Model	LXE10E-A, LXE10E-1

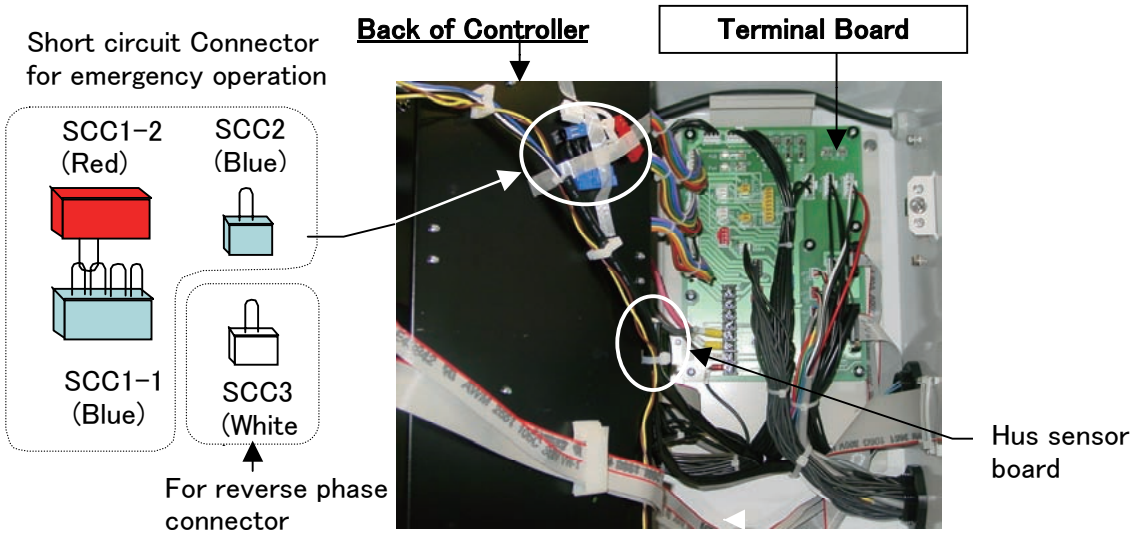

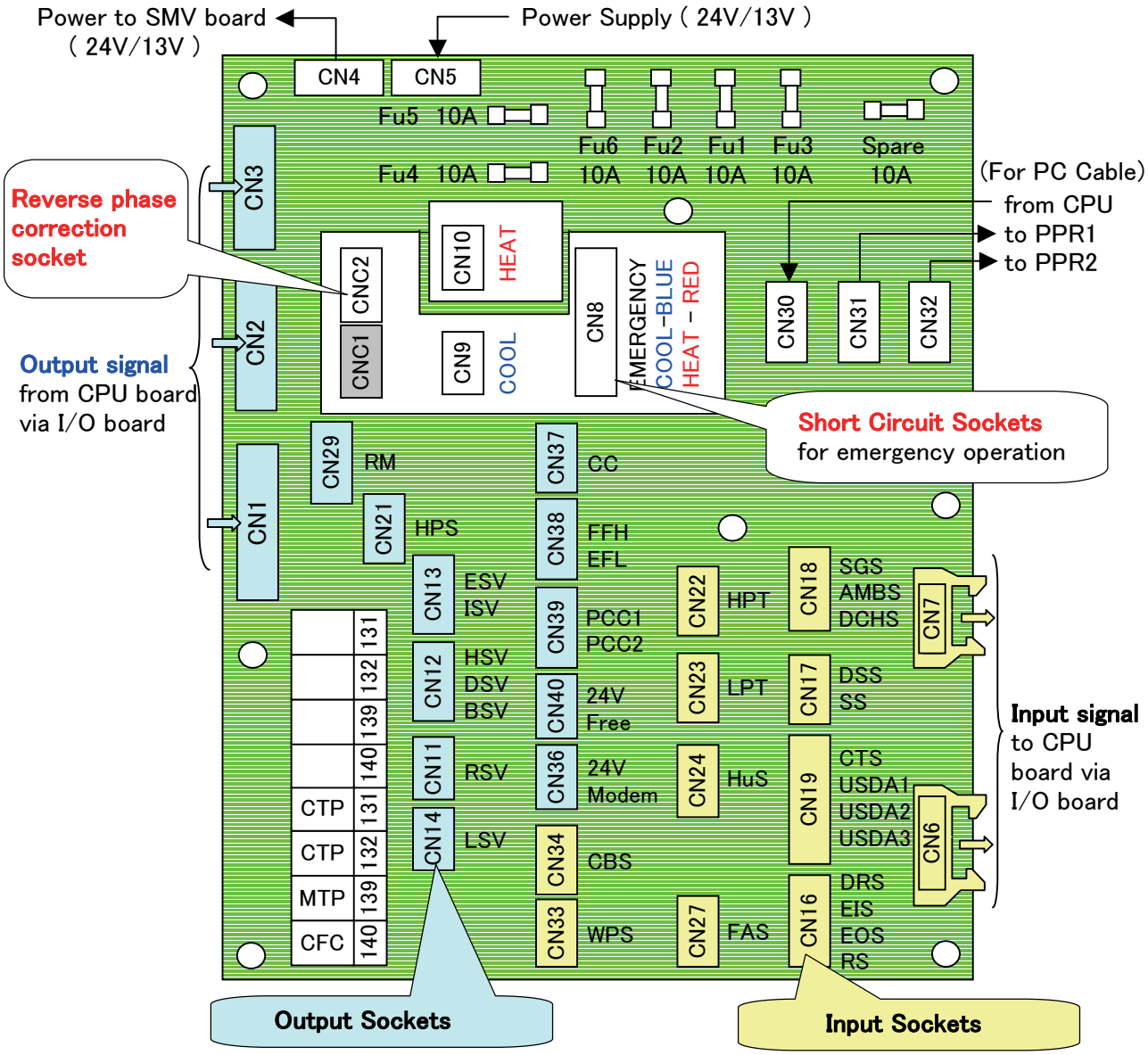

DAIKIN

TECHNICAL INFORMATION

DAIKIN INDUSTRIES LTD
AFTER SALES SERVICE DIV.

Subject	TERMINAL BOARD (Screw type before April 2006)
Model	LXE10E-A, LXE10E-1,1A,1B,1C,1D

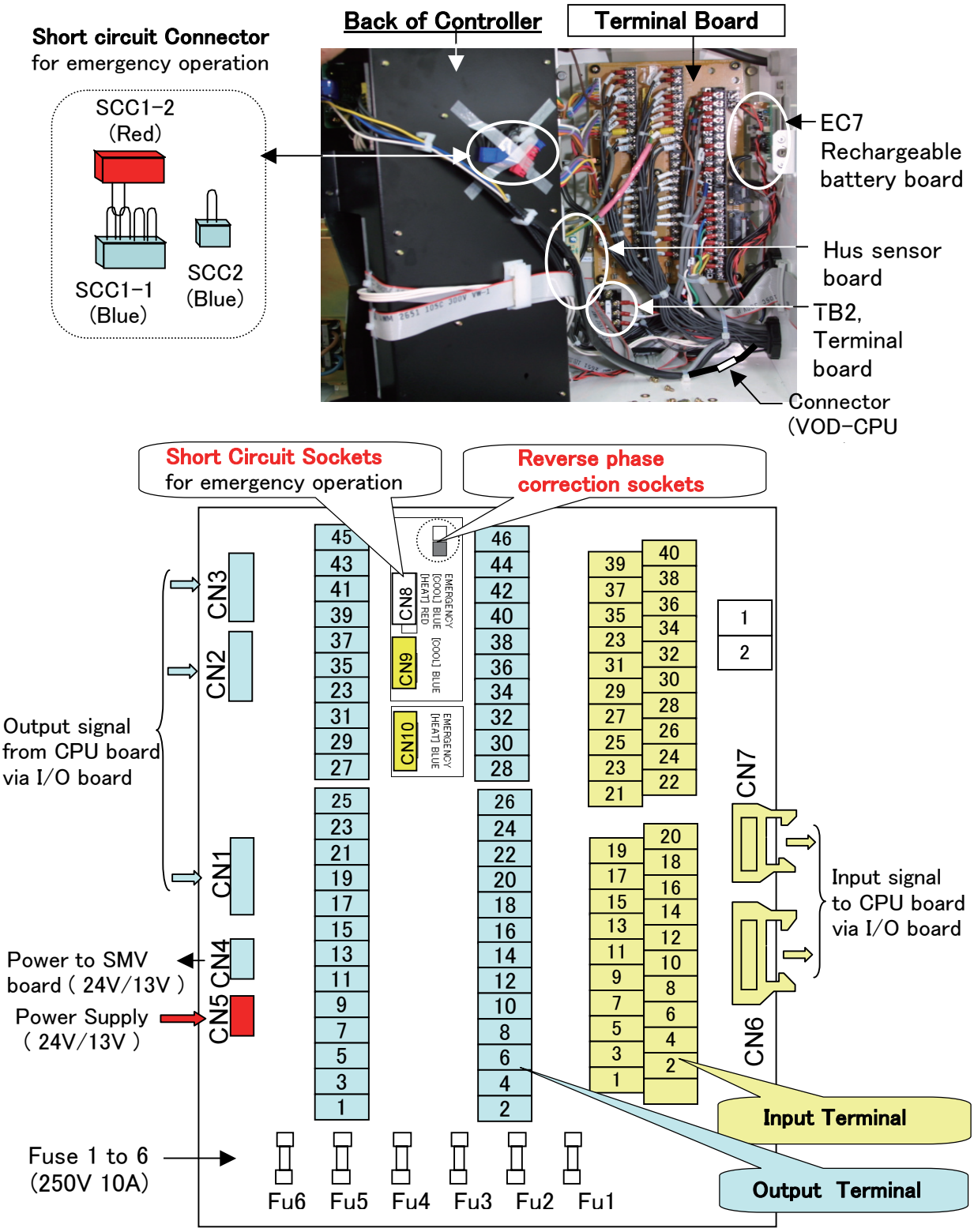

COMPRESSOR & WIRING DIAGRAM

3

DAIKIN

TECHNICAL INFORMATION

番号:----

DAIKIN INDUSTRIES LTD
AFTER SALES SERVICE DIV.

Subject	Scroll compressor construction
Model	LXE10E100 or later, LXE10E-A, LXE10E-1

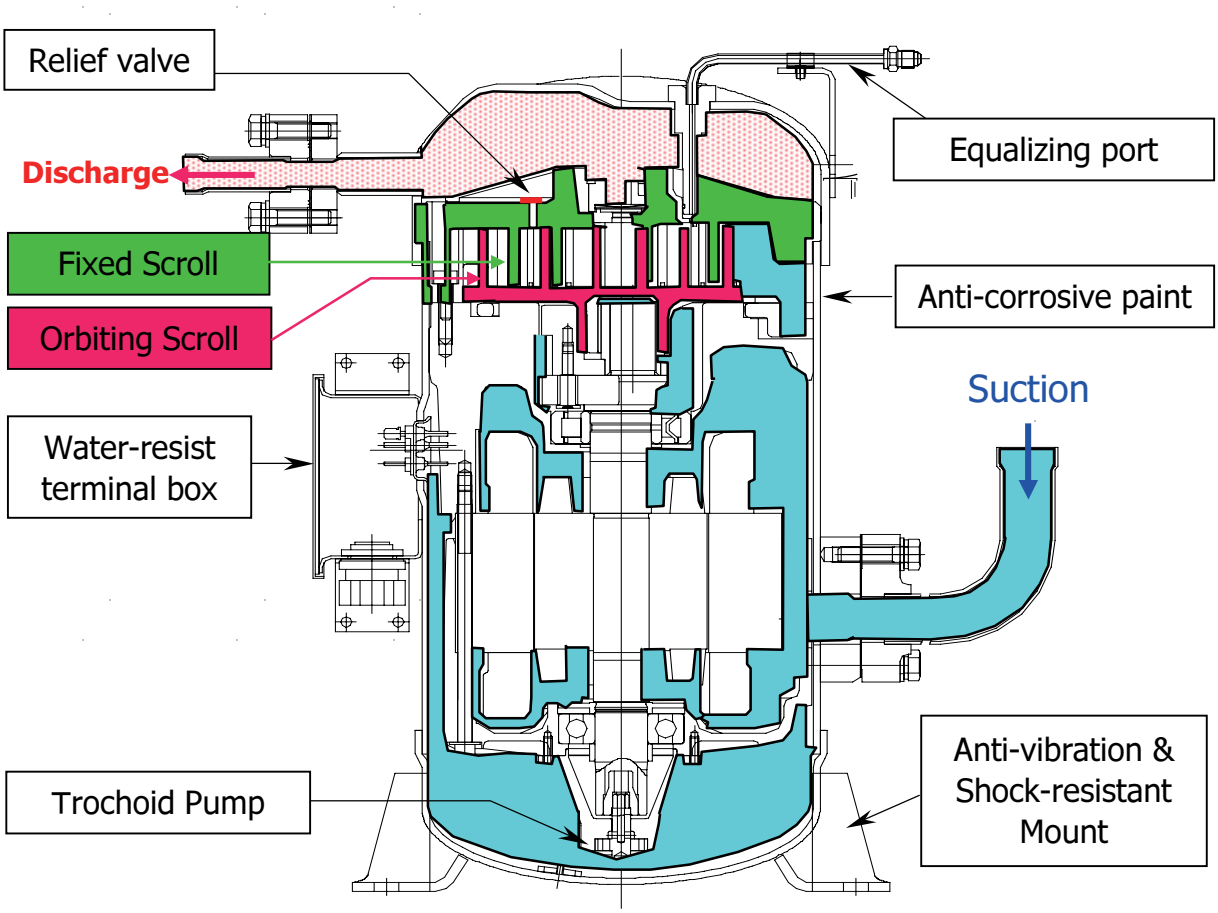

DAIKIN

TECHNICAL INFORMATION

番号:----
DAIKIN INDUSTRIES LTD
AFTER SALES SERVICE DIV.

Subject	Wiring Diagram
Model	LXE10E100 or later

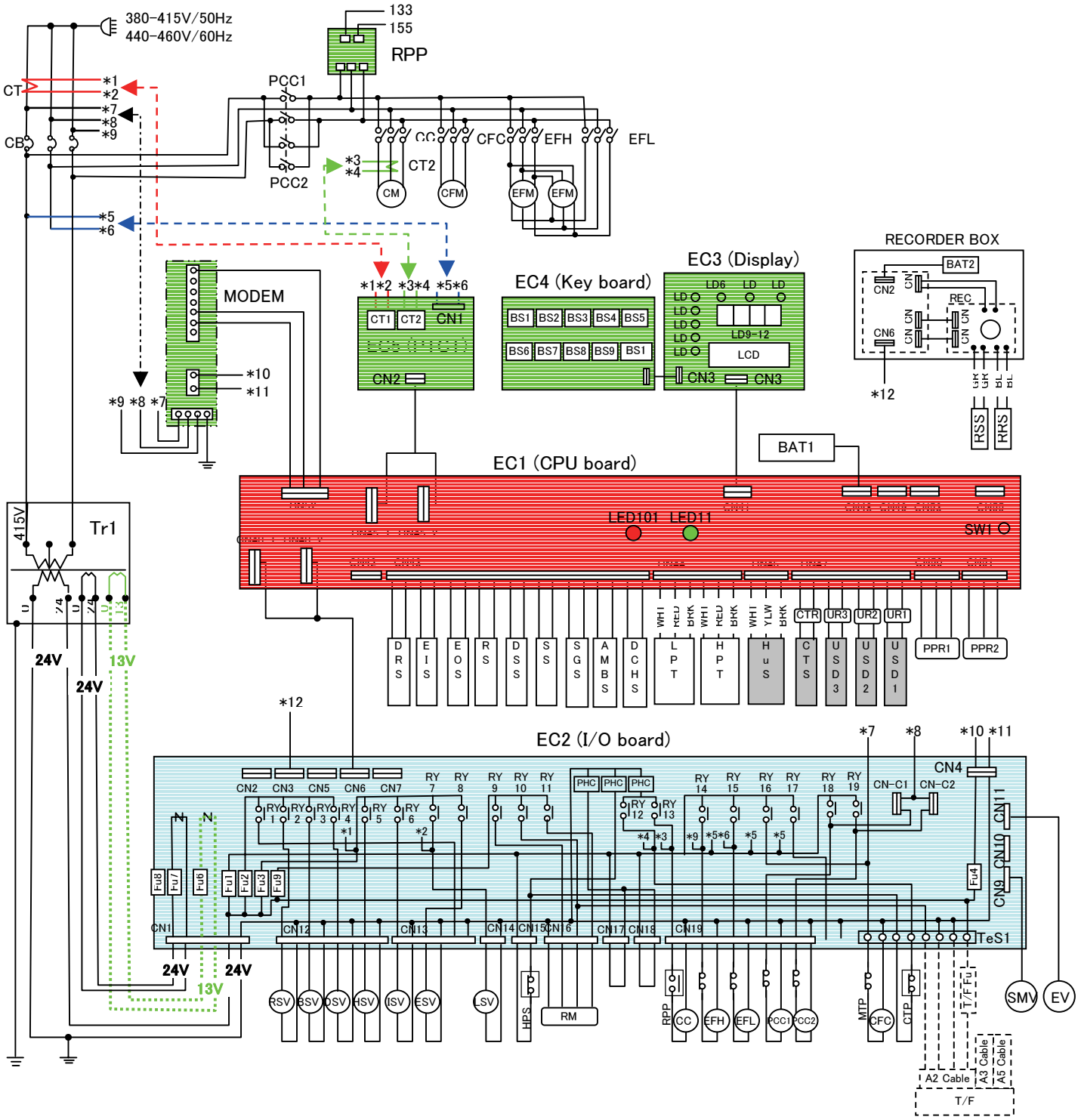

DAIKIN

TECHNICAL INFORMATION

番号:----
DAIKIN INDUSTRIES LTD
AFTER SALES SERVICE DIV.

Subject	Wiring Diagram (Connector type terminal board TB1+ Rechargeable battery)
Model	LXE10E-A15G～, -A32A～, -A33～, -A36～, -A37～

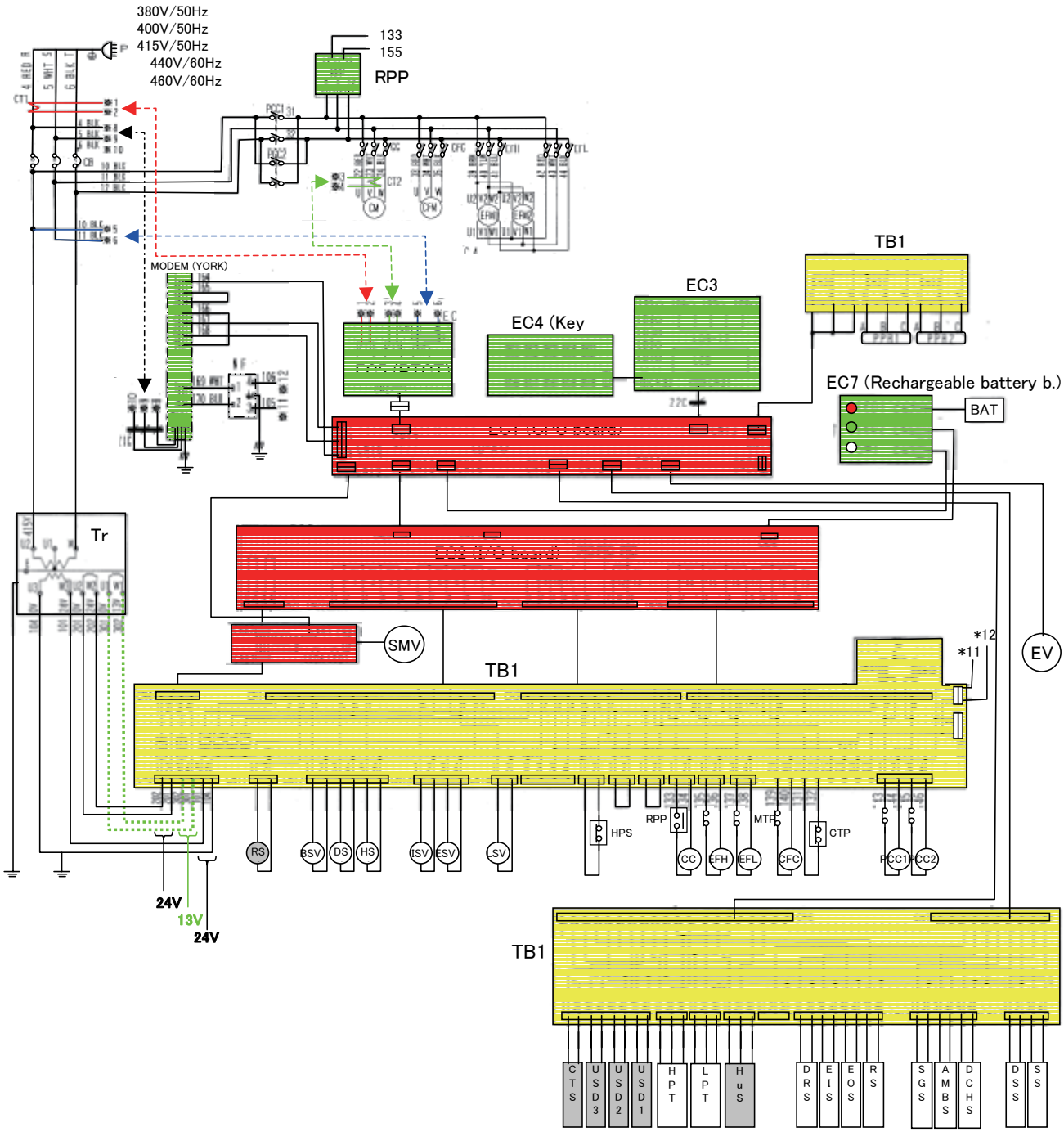

DAIKIN

TECHNICAL INFORMATION

番号:----
DAIKIN INDUSTRIES LTD
AFTER SALES SERVICE DIV.

Subject	Wiring Diagram (Connector type terminal board TB1 + Temp. Recorder + RM)
Model	LXE10E-A5E～, -A9B～, -A12E～ , -A18D～ , -A 26D～, -A40～

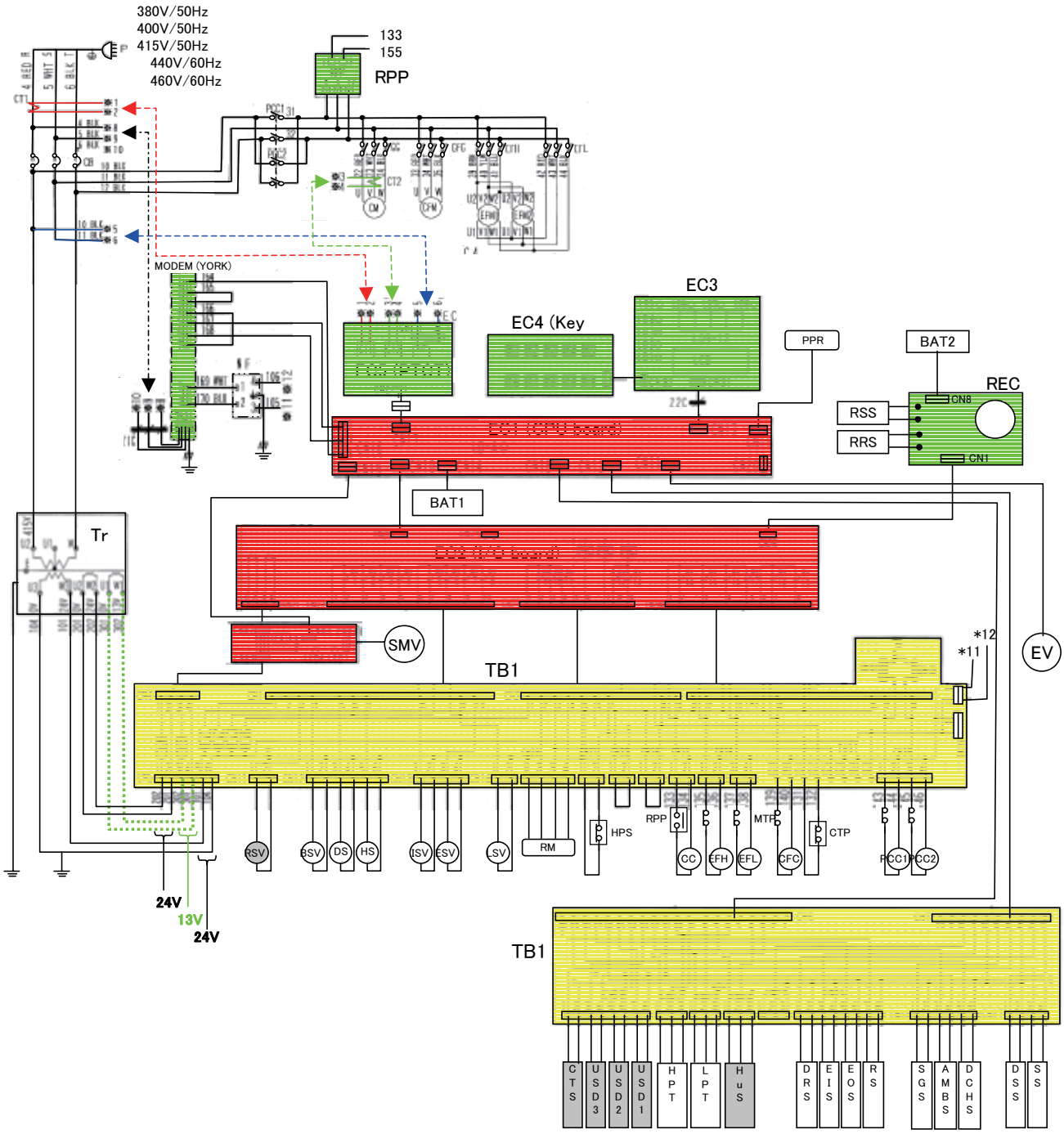

DAIKIN

TECHNICAL INFORMATION

番号:----
DAIKIN INDUSTRIES LTD
AFTER SALES SERVICE DIV.

Subject	Wiring Diagram (Screw type terminal board TB1 + Rechargeable battery)
Model	LXE10E-A14, -A15～A15F, -A16, -A21～A21D, -A27～A27B LXE10E -A31～A31B, -A35～A35B, -A36～A36A

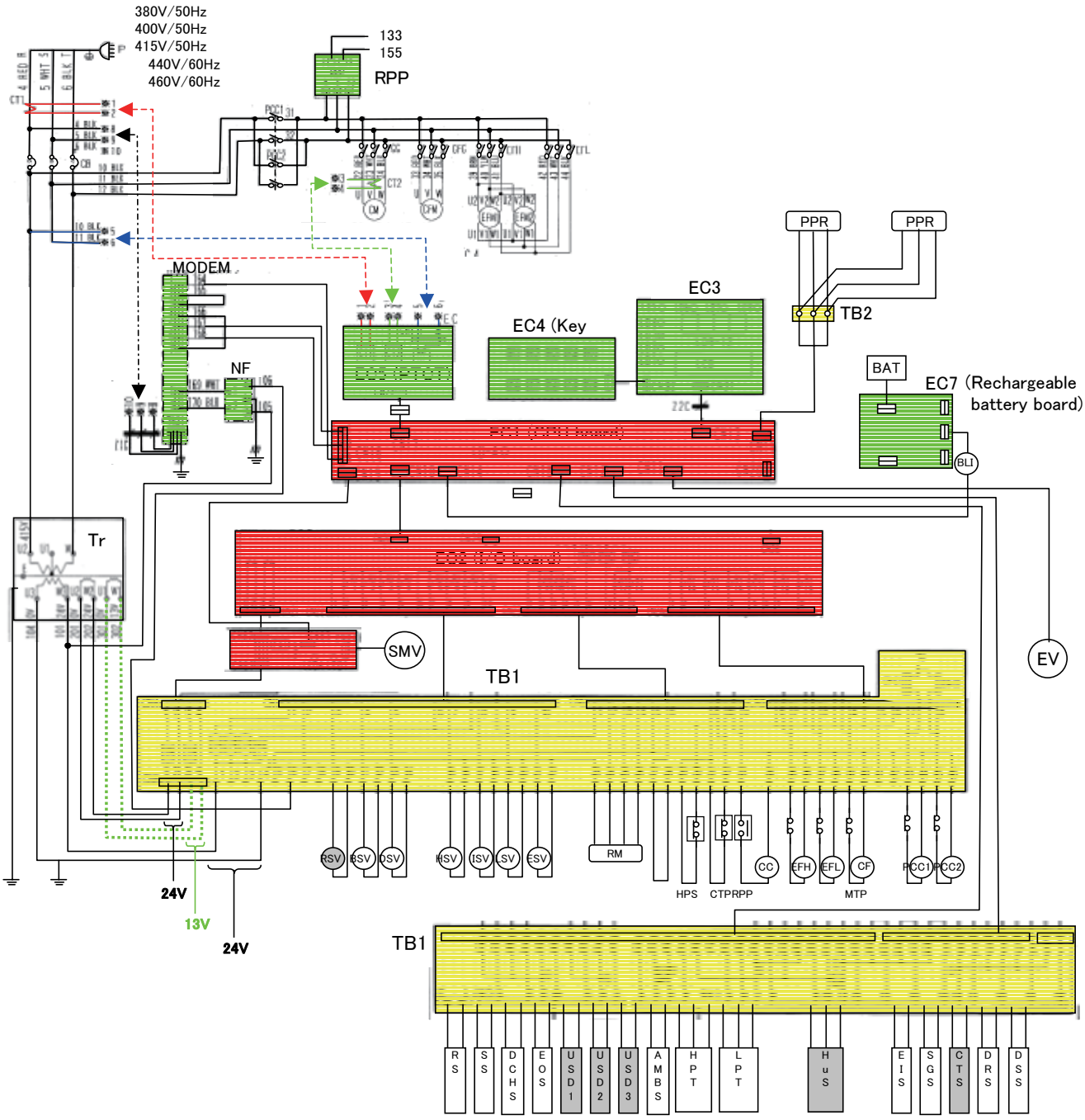

DAIKIN

TECHNICAL INFORMATION

番号:----
DAIKIN INDUSTRIES LTD
AFTER SALES SERVICE DIV.

Subject	Wiring Diagram (Screw type terminal board TB1 + Temp. Recorder + RM)
Model	LXE10E-A5～A5D, -A6, -A7, -A8, -A9, -A11, -A12～A12D, -A17～A17A LXE10E-A18～A18C, -A19, -A20, -A26～A26C, -A28, -A30, -A35～A35B

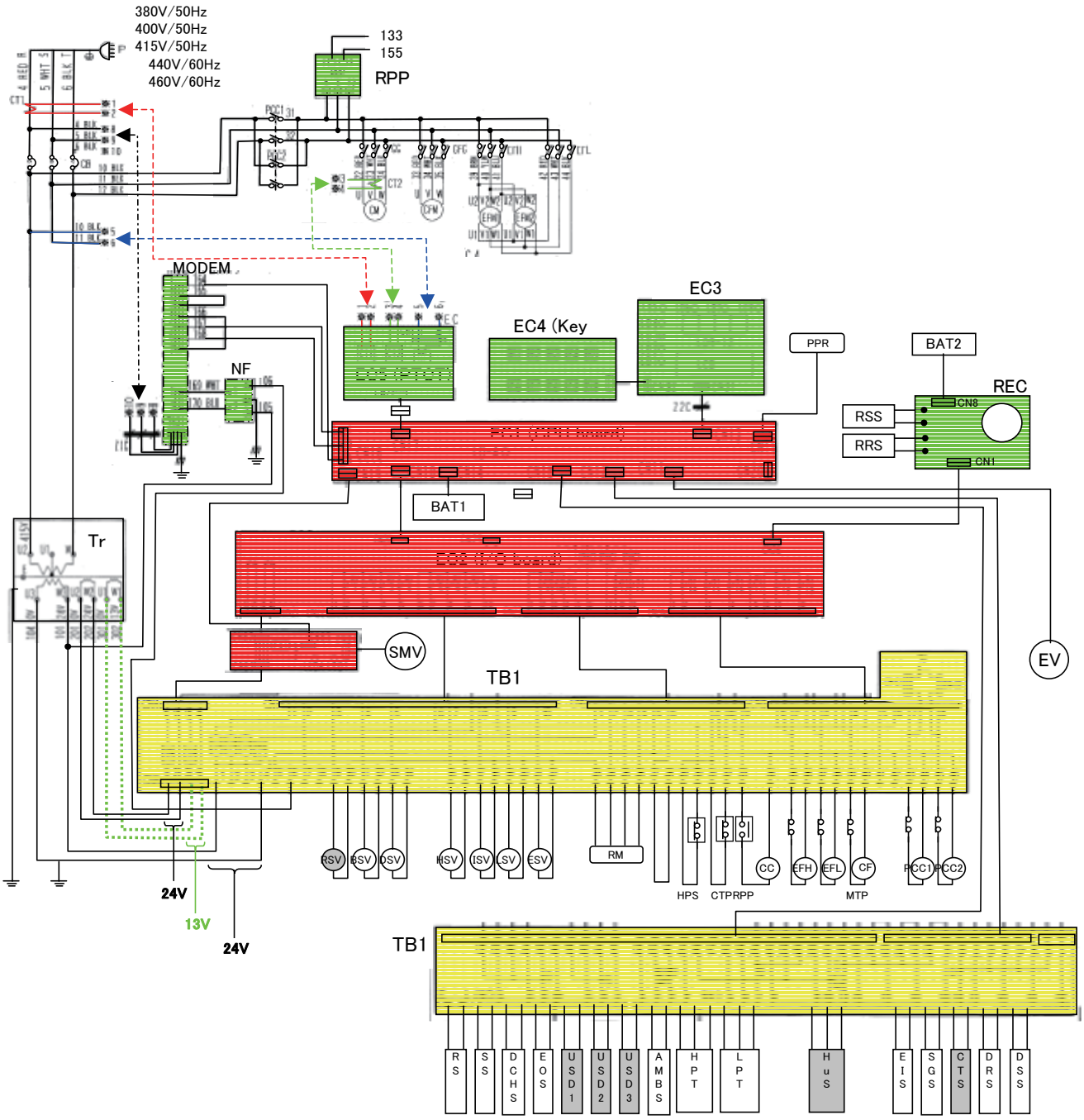

DAIKIN

TECHNICAL INFORMATION

番号:----

DAIKIN INDUSTRIES LTD
AFTER SALES SERVICE DIV.

Subject	The protected circuit by fuse 1,2,3 --- 9
Model	LXE10E100 or later

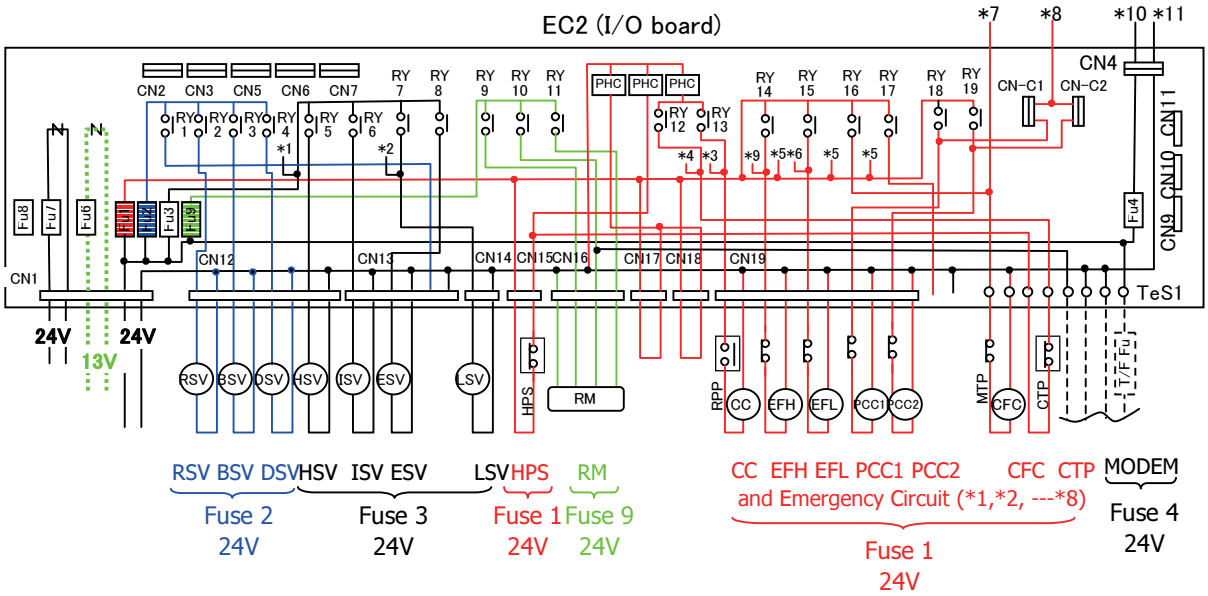

DAIKIN

TECHNICAL INFORMATION

番号:----

DAIKIN INDUSTRIES LTD
AFTER SALES SERVICE DIV.

Subject	The protected circuit by fuse 1,2,3 or 6
Model	LXE10E-A, LXE10D

● Screw type terminal board TB1 (Before April 2006)

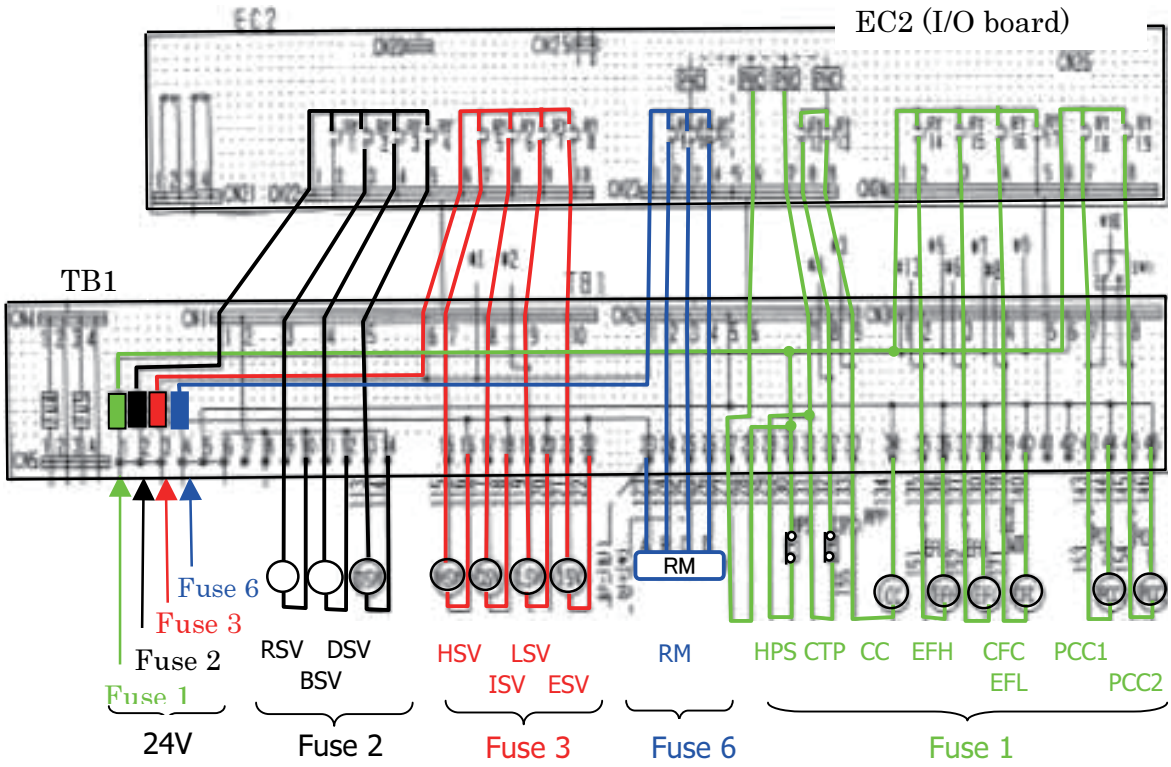

● Connector type terminal board TB1 (Since May 2006)

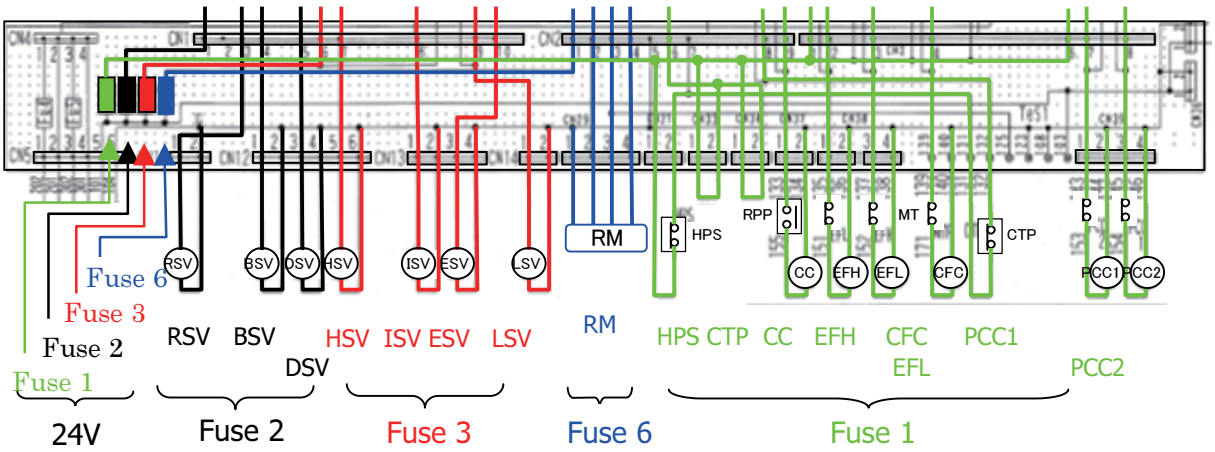

DAIKIN

TECHNICAL INFORMATION

番号:----

DAIKIN INDUSTRIES LTD
AFTER SALES SERVICE DIV.

Subject	The protected circuit by fuse 4,5 or 1(EC6)
Model	LXE10E-A, LXE10E-1, LXE10D

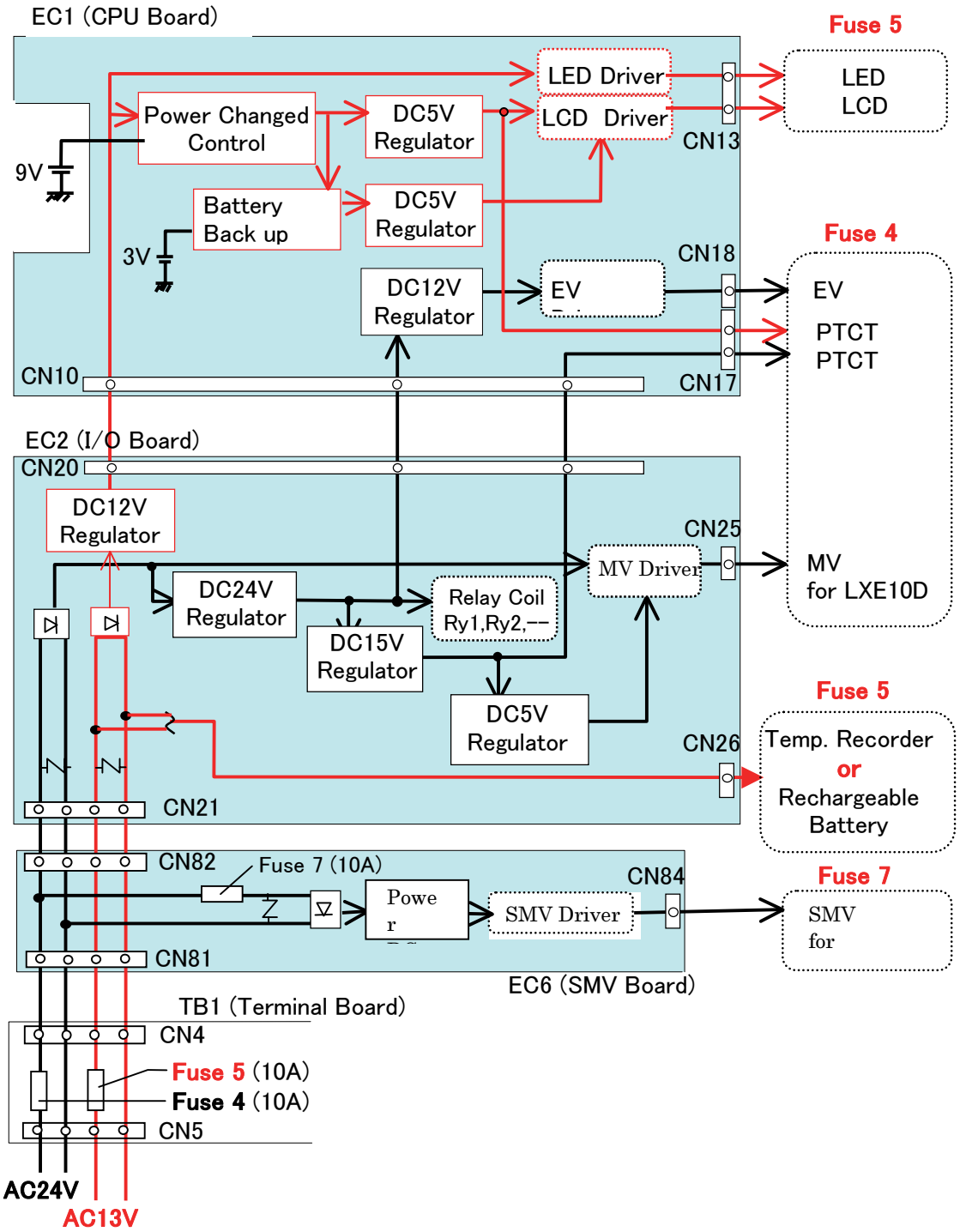

DAIKIN

TECHNICAL INFORMATION

番号:----

DAIKIN INDUSTRIES LTD
AFTER SALES SERVICE DIV.

Subject	Set point and protective devices
Model	LXE10E100 or later, LXE10E-A, LXE10E-1

Device		Actuation	Set point	Detector	Alarm	LXE10D
High pressure switch		OFF ON	2400 kPa(24.47 kg/cm2) 1900 kPa(19.37 kg/cm2)	HPS	E101 *10=F803	2059kPa 1569kPa
High press. control		Control	2300～2350 kPa (23.5～24.0 kg/cm2)	HPT	---	1900kPa
Water pressure switch		OFF ON	98 kPa(1.9 kg/cm2) 39 kPa(0.4 kg/cm2)	WPS		
Defrost initiation		OFF	EOS≦20℃ or EIS≦5℃	EOS,EIS		20℃
Defrost termination		OFF	EOS≧30℃ (In-range)	EOS		35℃
			EOS≧30℃ & RS/DRS ≧15℃ (Out-range)	RS,DRS		----
Backup timer for defrost termination		Control	90 minutes	timer	E207	←ditto
High-pressure control (CFM)	Capacity Control at Chilled ope.	OFF ON	800 kPa (8.2kg/cm2) 900 kPa (10.2kg/cm2)	HPT	'---	---- ----
	Other operation	OFF ON	800 kPa (6.1 kg/cm2) 1000 kPa (8.2 kg/cm2)	HPT	---	500kPa 800kPa
Comp. dis. gas temp. protect-ion	Pull down LPT>50Kpa	OFF	135℃ (275F) Reset in 3 minutes	DCHS	E107⇒F803	130℃
	LPT≦50Kpa	OFF	128℃ (262F) Reset in 3 minutes			
Discharge gas temp. Control (ISV open)		ON	113～128℃	DCHS	---	125℃
Compressor overcurrent protection		OFF	26.0A Reset in 3 minutes	CT2	E103⇒F803 E105⇒F803	←ditto
Current control		Control	50Hz: 16.1A 60Hz: 17.4A	CT1	---	←ditto
Pump down termination		ON	-55 kPa	LPT	---	←ditto
Backup timer for pump down termination		Control	1 minutes	timer	E201	2 min.
Circuit breaker		OFF	30A	CB	---	50A
Fuse		OFF	5A,10A	Fu1～6	---	10A
Thermal protector for motor	EFM	OFF ON	135℃±5℃ 86℃±15℃		---	←ditto
	CFM	OFF-ON	150℃±5℃ 95℃±15℃		---	←ditto
	Comp.	OFF-ON	140℃±5℃ 118℃±11℃	CTP	E103 *10=F803	←ditto

DAIKIN

TECHNICAL INFORMATION

番号：
DAIKIN INDUSTRIES LTD
AFTER SALES SERVICE DIV.

Subject	Operation Pressure and Running Current , **Chilled Operation**
Model	LXE10E100 or later, LXE10E-A, LXE10E-1, LXE10D

● **Inside: 0℃ Power Supply:400V/60Hz**

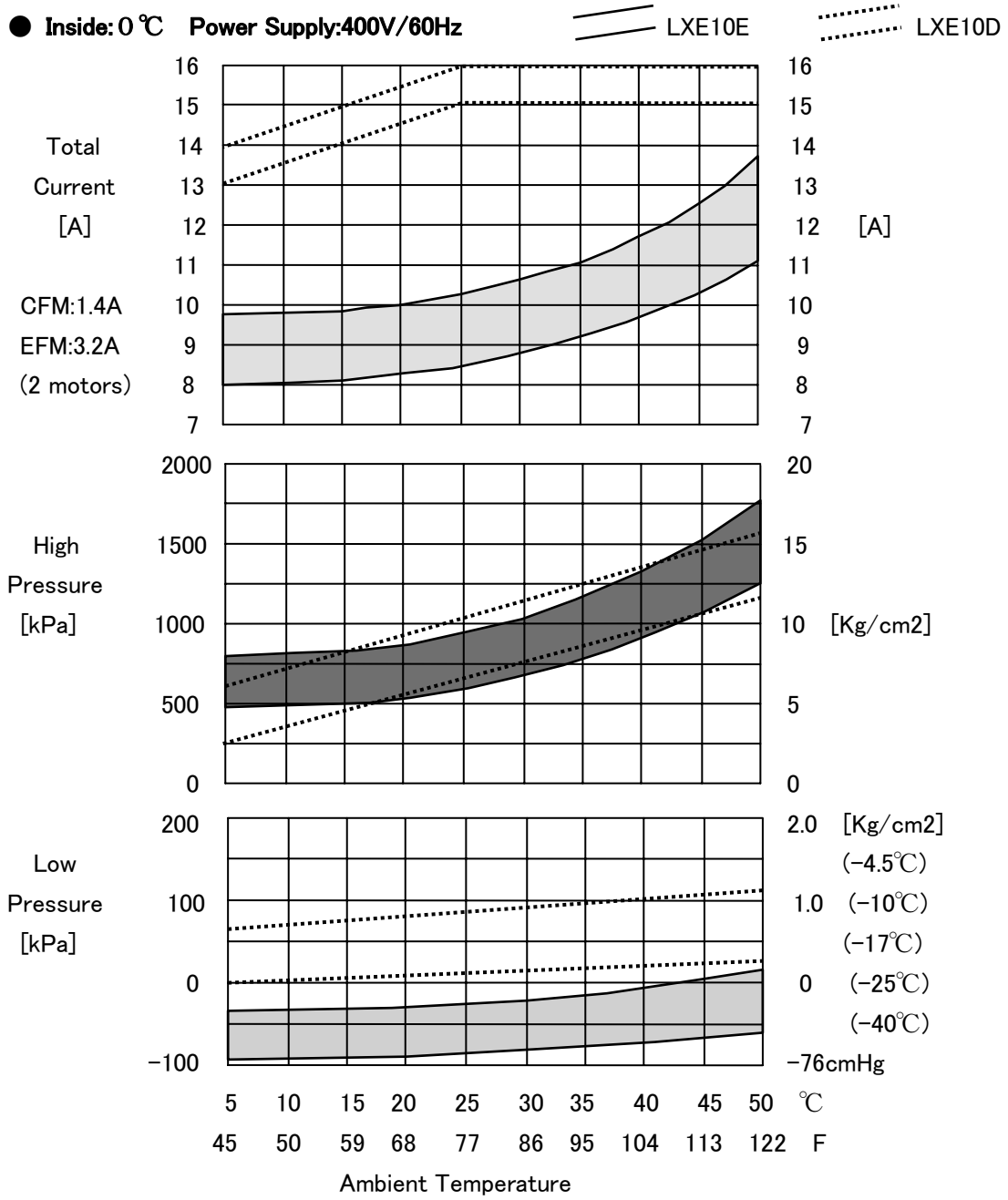

DAIKIN

番号：
DAIKIN INDUSTRIES LTD
AFTER SALES SERVICE DIV.

TECHNICAL INFORMATION

Subject	Operation Pressure and Running Current , **Frozen Operation**
Model	LXE10E100 or later, LXE10E-A, LXE10E-1, LXE10D

● **Inside:-18℃ Power Supply:400V/60Hz**

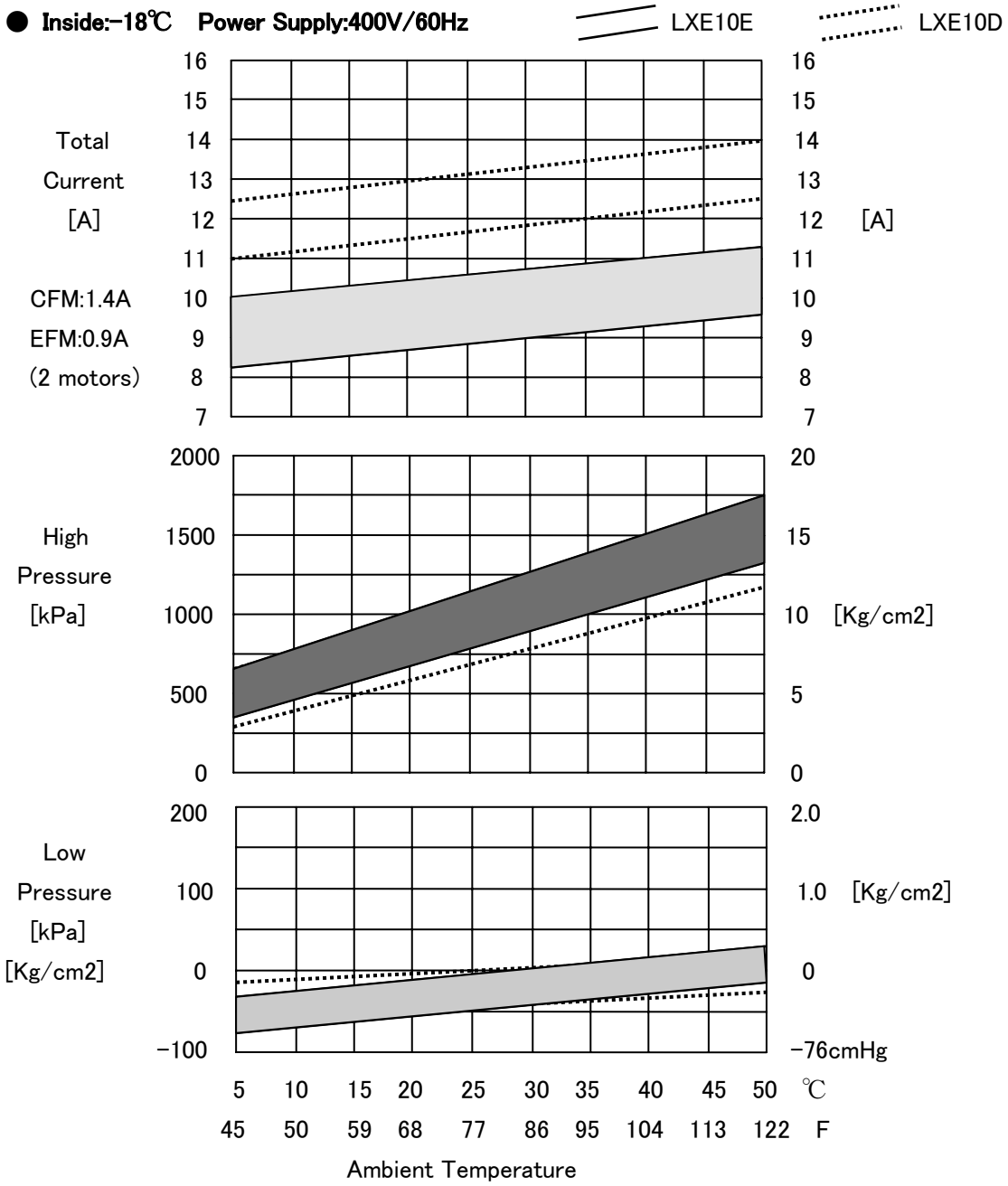

PIPING DIAGRAM

4

DAIKIN

TECHNICAL INFORMATION

DAIKIN INDUSTRIES LTD
AFTER SALES SERVICE DIV.

Subject	Piping Diagram ; FROZEN & PULL-DOWN OPERATION
Model	LXE10E100 or later, LXE10E-A

High Pressure Vapor
High Pressure Liquid
Energized valve coil/fan motor
Low Pressure Vapor
Low Pressure Liquid/Vapor

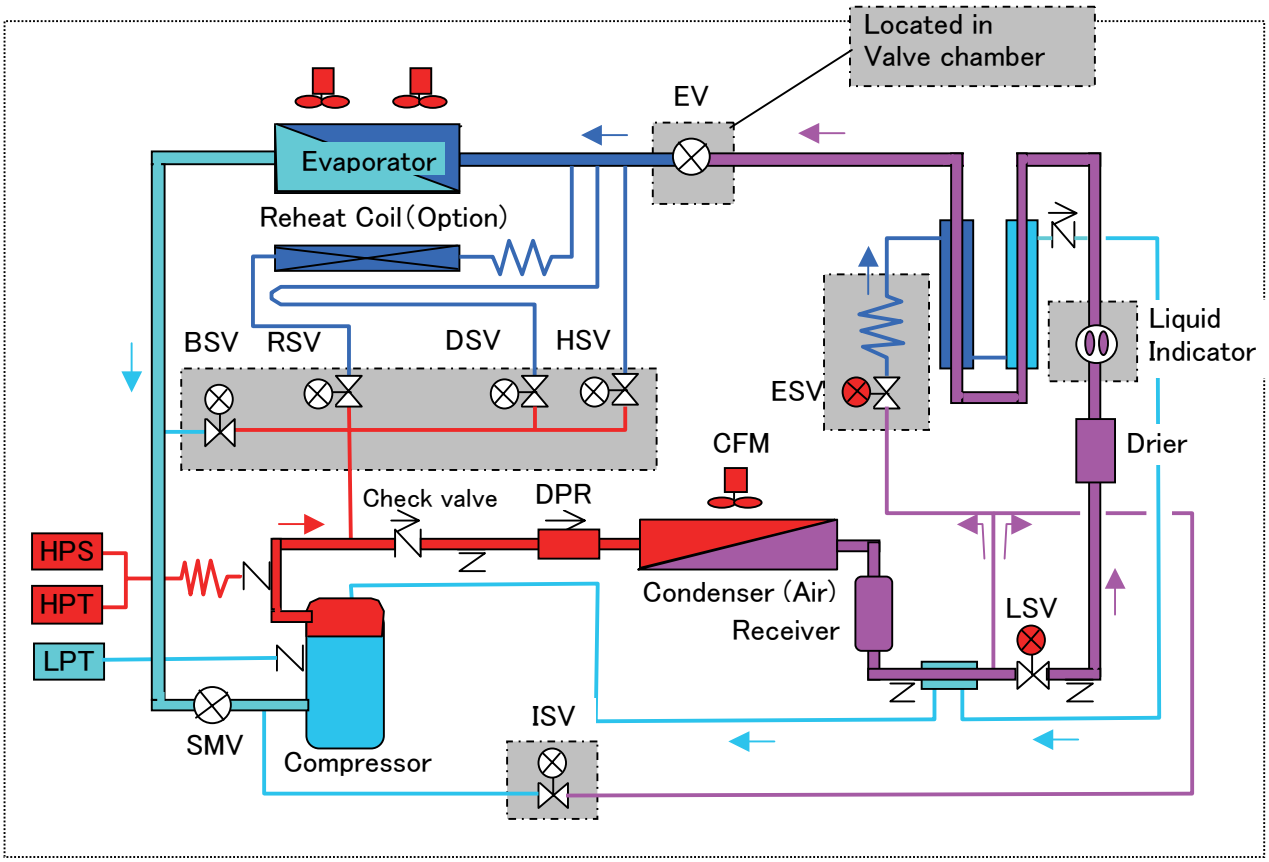

BSV: Dis. Gas Bypass Solenoid Valve
DSV: Defrost Solenoid Valve
ESV: Economizer Sol.Valve
EV: Electronic Expansion Valve
HSV: Hot Gas Solenoid Valve
LPT: Low Pressure Transeduser
HPT: High Pressure Transeduser
RSV: Reheat coil Solenoid Valve (Option)
SMV: Suction Modulation Valev (100%/328 pls)

--- Common control for Chilled and Defrost operation ---

DPR: Discharge Pressure Regulator (Open when HPT>690kPa)
ISV : Injection Solenoid Valve (Injection control)
HPS: High Pressure Switch (OFF>2400kPa, ON<1900kPa)

DAIKIN

TECHNICAL INFORMATION

DAIKIN INDUSTRIES LTD
AFTER SALES SERVICE DIV.

Subject	Frozen & Pull-down Operation
Model	LXE10E100 or later, LXE10E-A, LXE10E-1

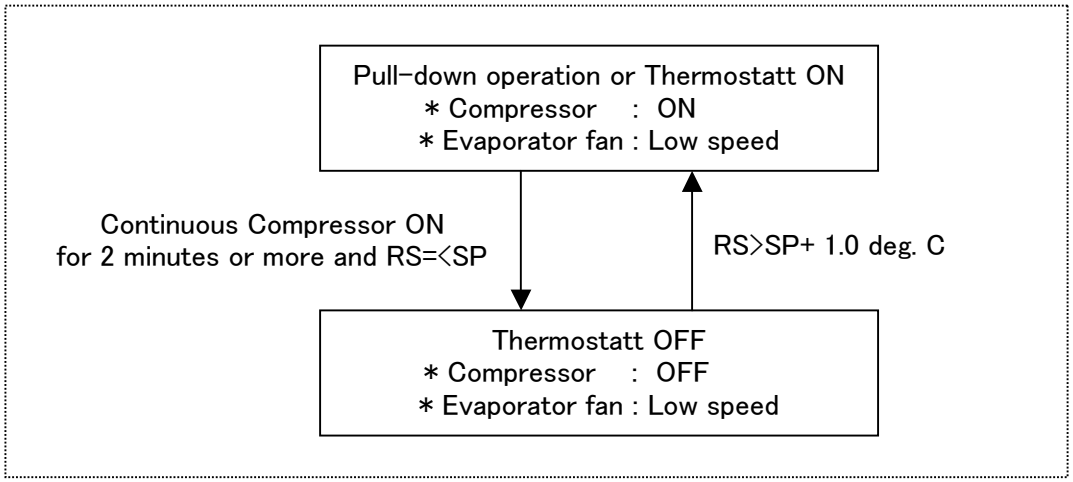

Components			Pull-down	Thermostat OFF
Motor	Compressor	CC	ON	OFF
	Evaporator fan,High speed	EFH	OFF	OFF
	Evaporator fan,Low speed	EFL	ON	ON
	Condenser fan	CF	ON/OFF ＊1	OFF
Solenoid valve	Liquid solenoid valve	LSV	ON	OFF
	Economizer solenoid valve	ESV	ON	OFF
	Injection solenoid valve	ISV	ON/OFF ＊2	OFF
	Hot-gas solenoid valve	HSV	OFF	OFF
	Defrost solenoid valve	DSV	OFF	OFF
	By-pass solenoid valve	BSV	OFF	OFF
	Reheat sonenoid valve	RSV	ON/OFF ＊3	OFF
Suction modulation valve		SMV	100%	100%
Electronic expansion valve		EV ＊4	200 to 2000pls	100pls
		EV ＊5	48 to 420pls	0pls

＊1 High pressure control
＊2 Injection control
＊3 RSV : OFF ≦RS 20 ℃, RSV : ON ≧RS 25 ℃
＊4 EV (2000pls/100%) for LXE10E-A
＊5 EV (420pls/100%) for LXE10E100 or later

DAIKIN

TECHNICAL INFORMATION

DAIKIN INDUSTRIES LTD
AFTER SALES SERVICE DIV.

Subject	Piping Diagram ; CHILLED OPERATION in Capacity control
Model	LXE10E100 or later, LXE10E-A

High Pressure Vapor
High Pressure Liquid
Energized valve coil/fan motor
Low Pressure Vapor
Low Pressure Liquid/Vapor

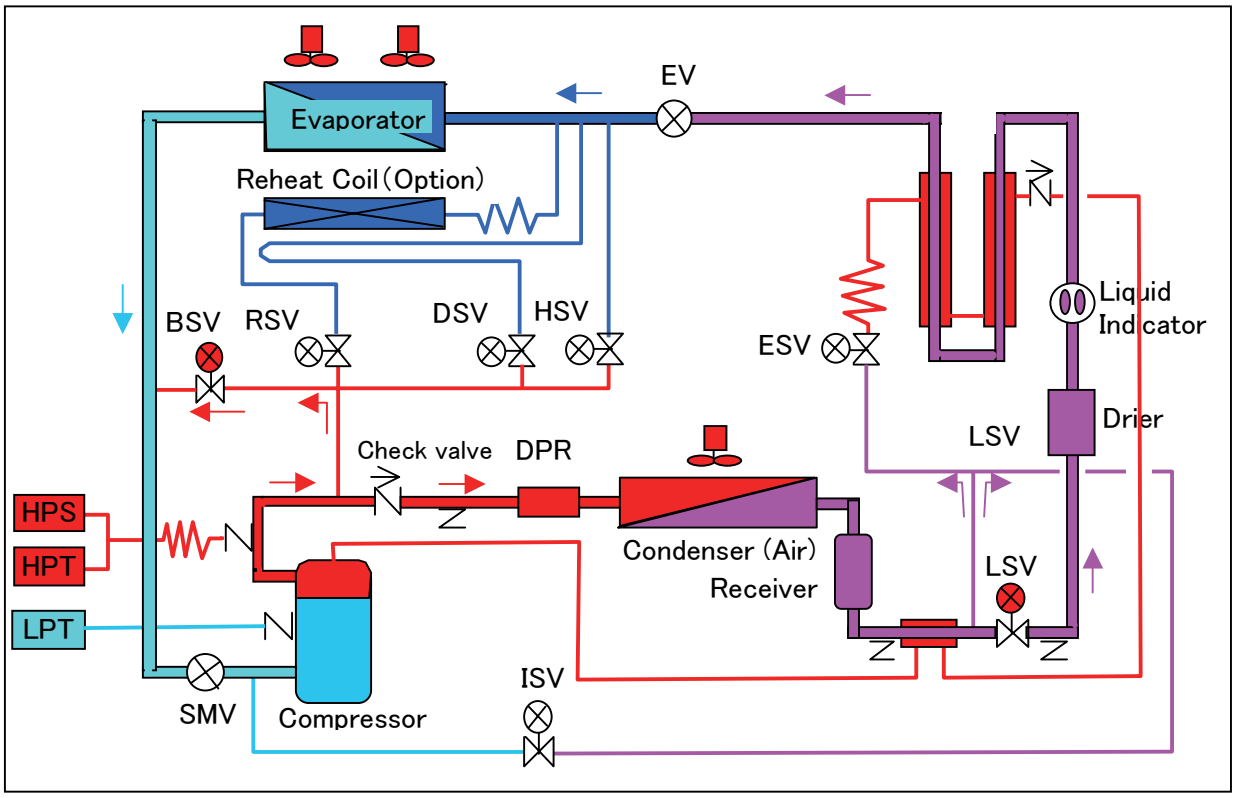

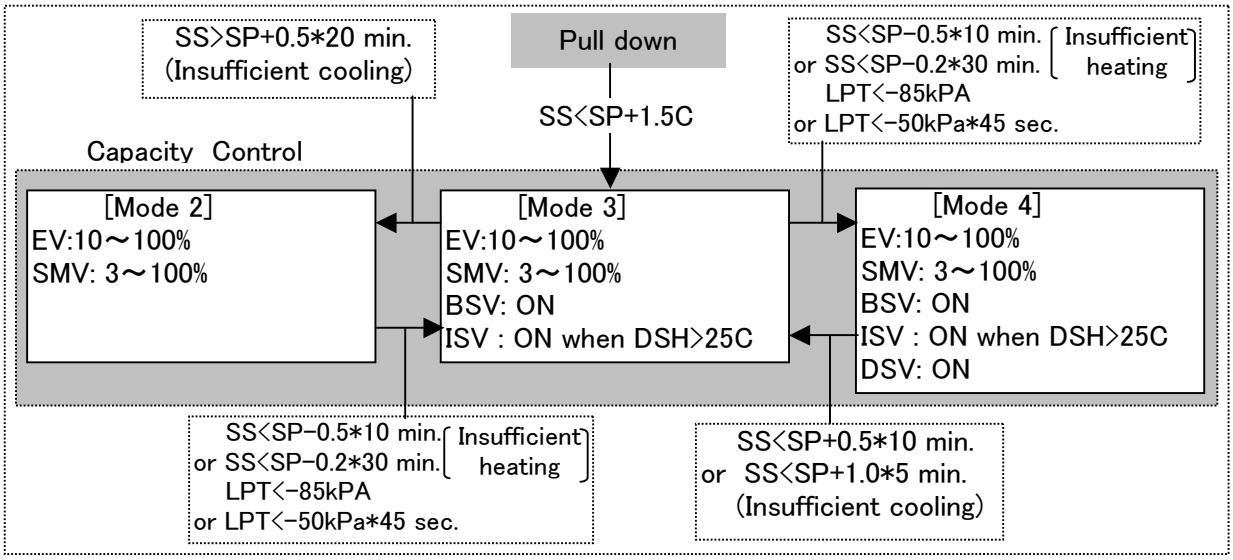

DAIKIN

TECHNICAL INFORMATION

DAIKIN INDUSTRIES LTD
AFTER SALES SERVICE DIV.

Subject	Chilled and Partial Frozen Operation
Model	LXE10E100 or later, LXE10E-A, LXE10E-1

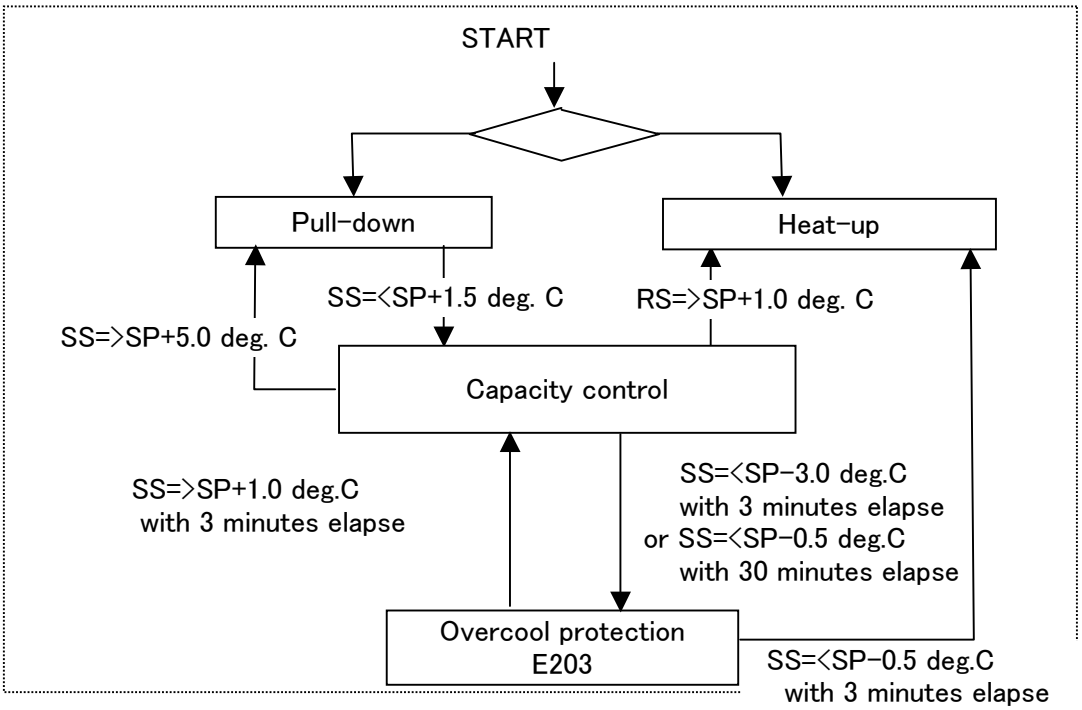

Components			Pull-down	Capacity control	Heat-up	Overcool protection
Motor	Compressor	CC	ON	ON	ON	OFF
	Evaporator fan,High speed	EFH	ON	ON	ON	ON
	Evaporator fan,Low speed	EFL	OFF	OFF	OFF	OFF
	Condenser fan	CF	ON/OFF *1	ON	ON/OFF *4	OFF
Solenoid valve	Liquid solenoid valve	LSV	ON	ON	OFF	OFF
	Economizer solenoid valve	ESV	ON	OFF	OFF	OFF
	Injection solenoid valve	ISV	ON/OFF *2	ON/OFF *5	ON/OFF *3	OFF
	Hot-gas solenoid valve	HSV	OFF	ON/OFF *5	ON	OFF
	Defrost solenoid valve	DSV	OFF	ON/OFF *5	ON	OFF
	By-pass solenoid valve	BSV	OFF	ON/OFF *5	OFF	OFF
	Reheat sonenoid valve	RSV	ON/OFF *6	OFF	OFF	OFF
Suction modulation valve		SMV	100%	3 to 100%	100%	100%
Electronic expansion valve		EV *7	200 to 2000pls	200 to 2000pls	0pls	1000pls
		EV *8	21 to 420pls	41 to 420pls	0pls	189pls

*1 High pressure control
*2 Injection control
*3 Charge control
*4 Release control
*5 capacity control and hot gas by-pass control
*6 RSV : OFF ≦RS 20 ℃, RSV : ON ≧RS 25 ℃
*7 EV (2000pls/100%) for LXE10E-A
*8 EV (420pls/100%) for LXE10E100 or later

DAIKIN

TECHNICAL INFORMATION

DAIKIN INDUSTRIES LTD
AFTER SALES SERVICE DIV.

Subject	Piping Diagram ; DEFROST & HEAT-UP OPERATION
Model	LXE10E100 or later, LXE10E-A

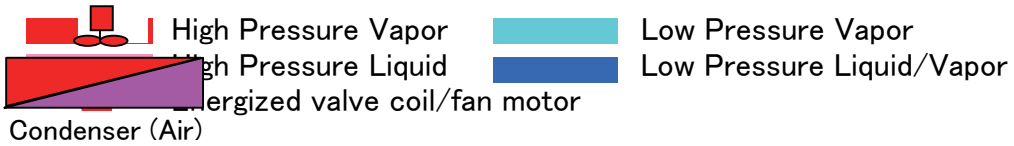

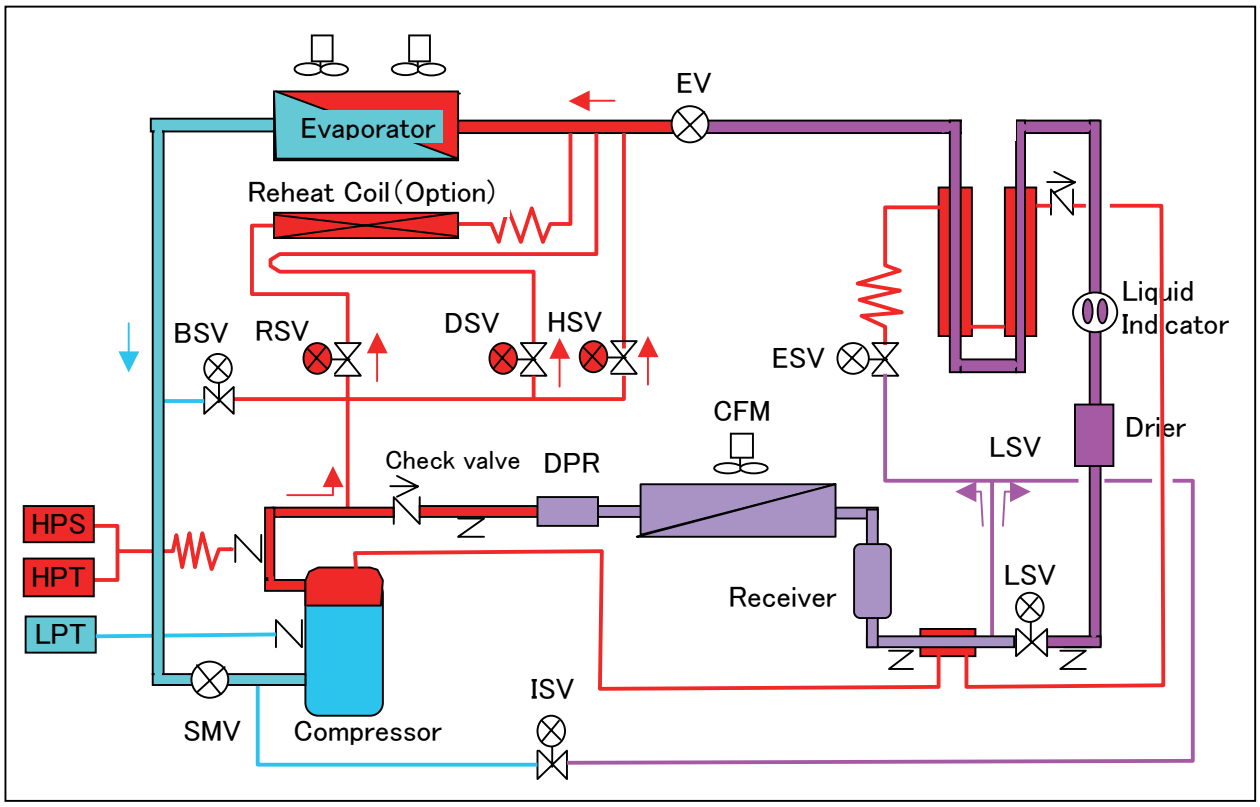

※Before defrost operation, the refrigerant is pumped down into the liquid line between DPR and LSV.

※ **Charge & Release control** during the defrost operation

[Charge control]	[Release control]
Charge start (ISV open): HP<700kPa or LP<40 kPa	Release start (CFM run): HP>1200kPa
Charge stop (ISV close): HP>800kPa or LP>70 kPa	Release stop (CFM stop): HP<1150kPa

※**EV**: Opening 5% for defrost, 0% for heat-up **SMV**: Opening 100%

Subject	2.5.3 Defrosting operation
Model	LXE10E100 or later, LXE10E-A, LXE10E-1

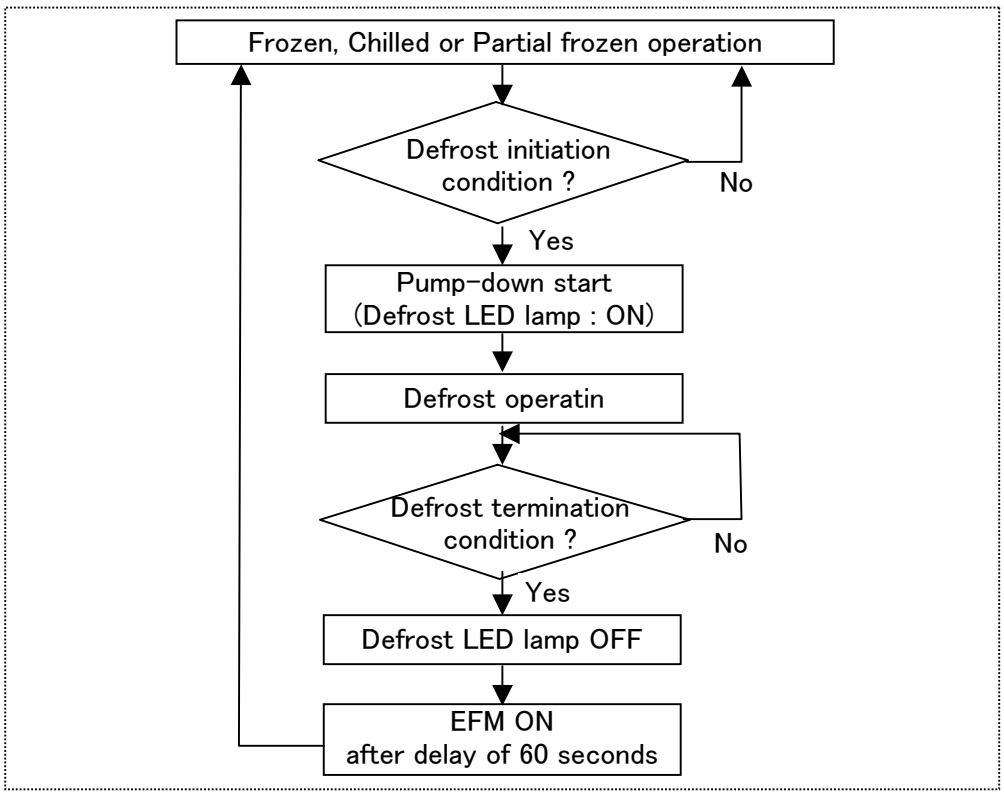

Components			Pump-down	Defrosting
Motor	Compressor	CC	ON	ON
	Evaporator fan,High speed	EFH	OFF	OFF
	Evaporator fan,Low speed	EFL	OFF	OFF
	Condenser fan	CF	ON	ON/OFF *2
Solenoid valve	Liquid solenoid valve	LSV	OFF	OFF
	Economizer solenoid valve	ESV	ON	OFF
	Injection solenoid valve	ISV	OFF	ON/OFF *1
	Hot-gas solenoid valve	HSV	OFF	ON
	Defrost solenoid valve	DSV	OFF	ON
	By-pass solenoid valve	BSV	OFF	OFF
	Reheat sonenoid valve	RSV	OFF	ON/OFF *3
Suction modulation valve		SMV	100%	100%
Electronic expansion valve		EV *4	200 to 2000pls	100pls
		EV *5	48 to 420pls	0pls

*1 Charge control
*2 Release control
*3 RSV ON ≧EOS 15 ℃, RSV OFF<EOS 15 ℃
*4 EV (2000pls/100%) for LXE10E-A
*5 EV (420pls/100%) for LXE10E100 or later

DAIKIN

TECHNICAL INFORMATION

DAIKIN INDUSTRIES LTD
AFTER SALES SERVICE DIV.

Subject	Piping Diagram ;DEHUMIDIFICATION OPERATION (Option)
Model	LXE10E100 or later, LXE10E-A

High Pressure Vapor
High Pressure Liquid
Energized valve coil/fan motor
Low Pressure Vapor
Low Pressure Liquid/Vapor

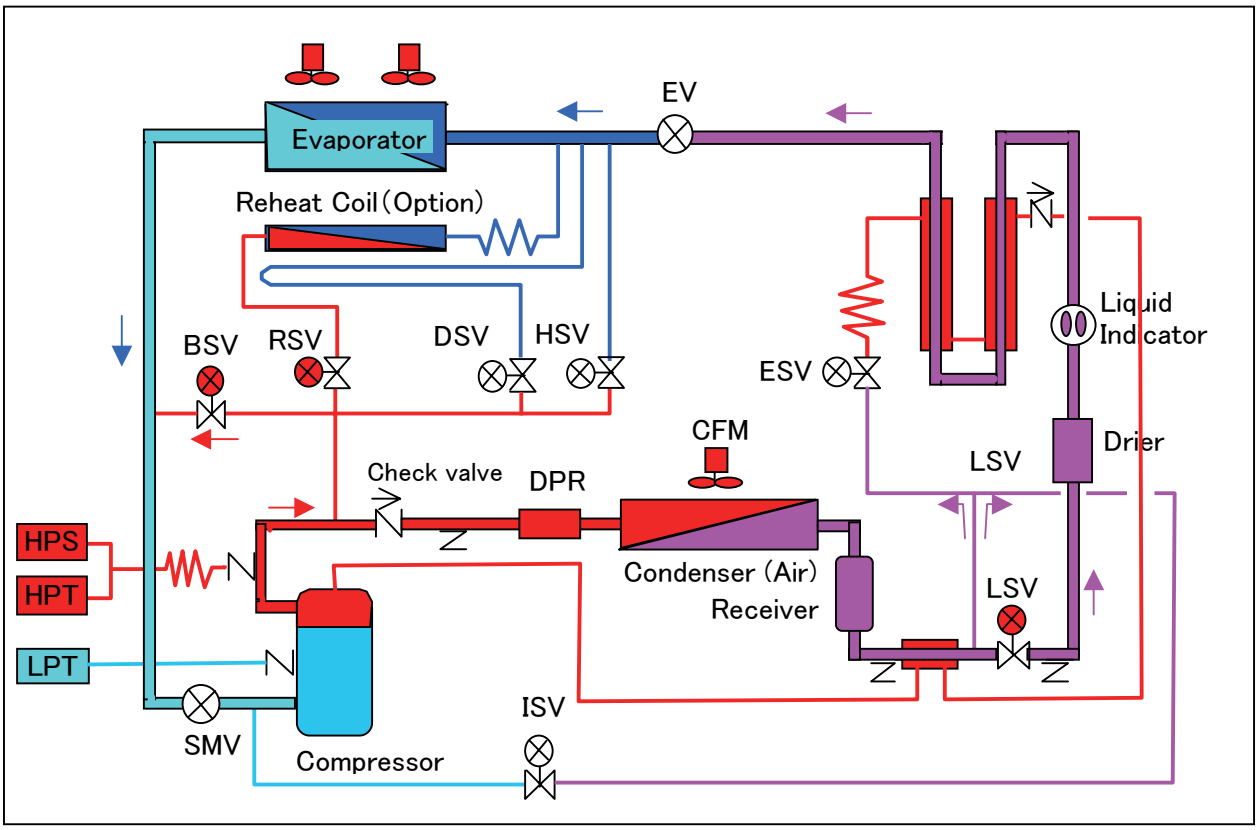

*The dehumidification control is performed only during "chilled operation" in the capacity control. I.e when the control temperaturer goes to out of In-Range, the dehumidification control is turned off by turning RSV.

DAIKIN

TECHNICAL INFORMATION

DAIKIN INDUSTRIES LTD
AFTER SALES SERVICE DIV.

Subject	DEFROST OPERATION
Model	LXE10E100 or later, LXE10E-A, LXE10E-1

● WHEN IS THE DEFROST OPERATION IS PERFORMED ?

Pull-down	Short timer 4 Hr	Automatically
	Quick pull-down defrost	
In-Range	Long timer "3,6,9,12,24"Hr	Manualy setting
	On demand defrost "**99**"	
Out-Range	Out range timer 30 min.	Automatically

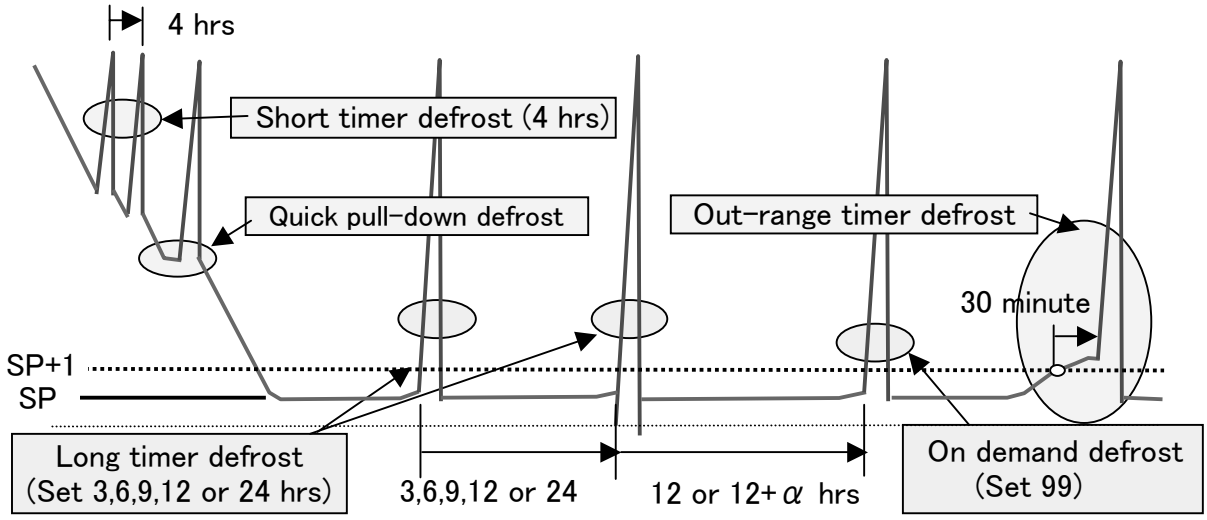

● DEFROST OPERATION ?

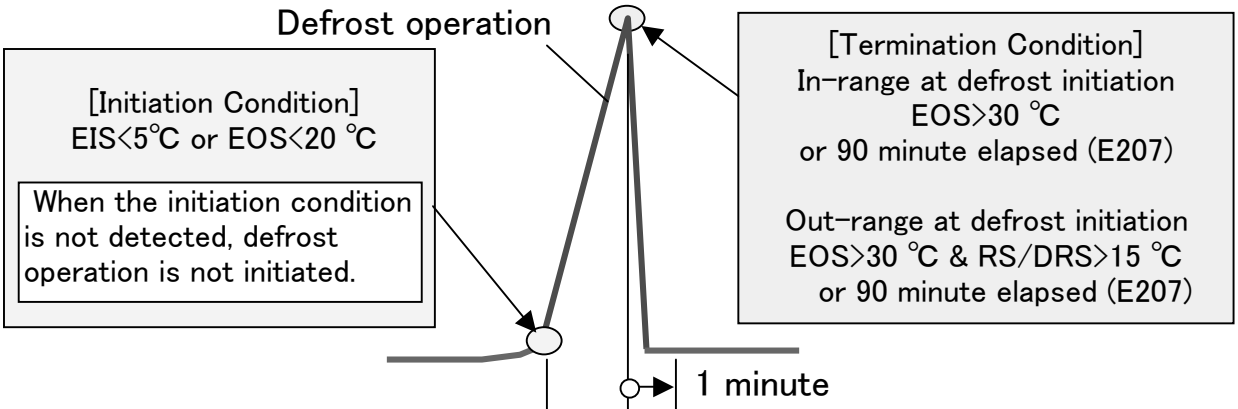

LED Lamp "DEFROST"	OFF	ON	OFF
Compressor	ON		
Eva. Fan Motor	ON	OFF	ON
LSV	ON	OFF	ON
DSV, HSV, RSV		ON	

ON DEMAND DEFROST

[PURPOSE]

It works to minimize the frequency of defrosting during frozen operation in In-Range.

[OPERATION]

* Set "**99**" in "Defrost Interval " setting, and the defrost interval is automatically set "12" hrs.
* Defrosting is suspended when the compressor running time rate reaches to **1.15 times** to the 1st running time rate after previous defrosting ,
* It's not suspended if the rate is less than 1.15 when the defrost interval timer 12 hrs is countedup.

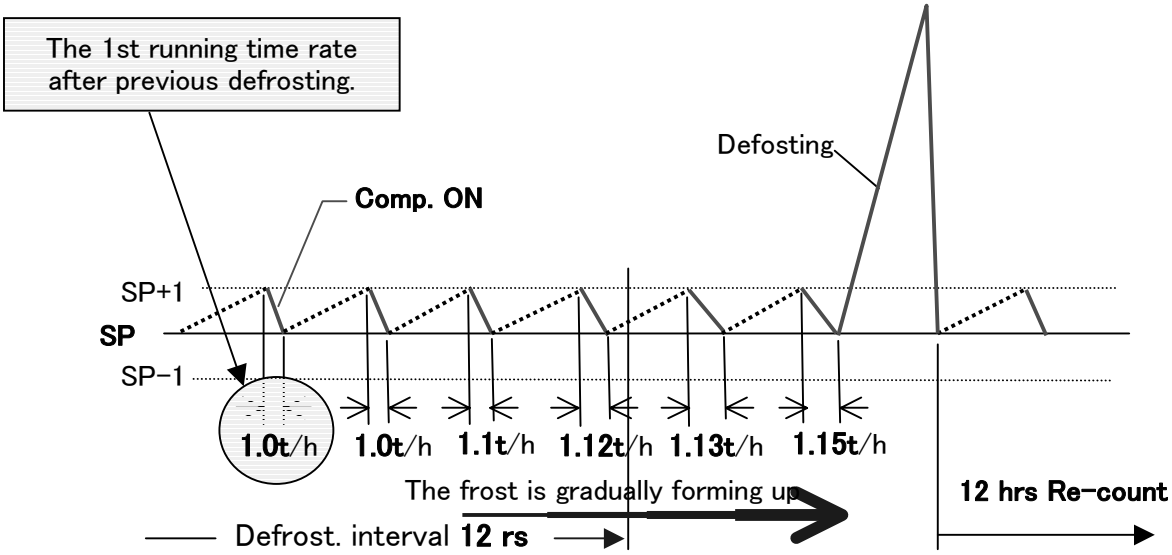

QUICK PULL-DOWN DEFROST

[OPERATION] If the return air temperature does not drop at the speed of **0.2℃/Hr** during frozen pull-down operation, defrosting will be initiated because it is judged the frost is formed on the evaporator.

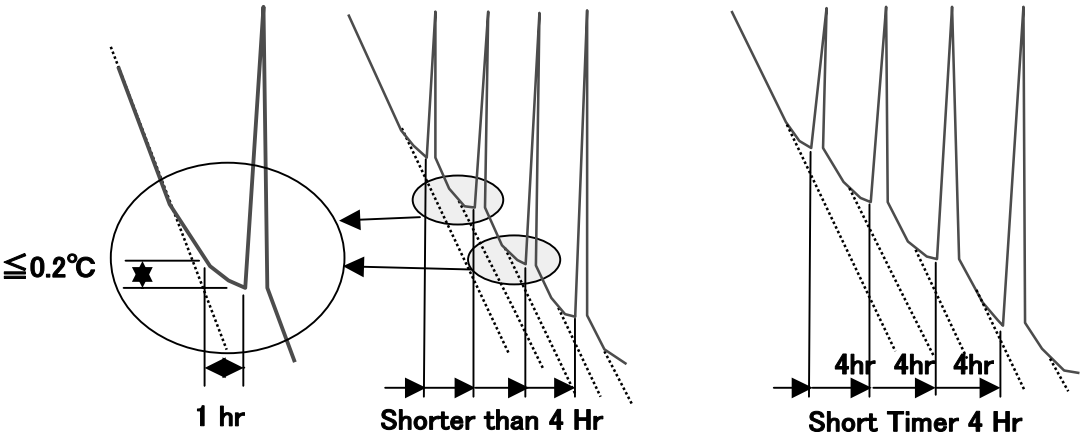

QUICK PULL-DOWN DEFROST

DEFROST with Short Timer 4 Hr

DAIKIN

TECHNICAL INFORMATION

番号:---

DAIKIN INDUSTRIES LTD
AFTER SALES SERVICE DIV.

Subject	Principle of DEHUMIDIFICATION CONTROL (Option)
Model	LXE10E100 or later, LXE10E-A ,LXE10E-1, LXE10D

●Understanding dehumidification control using psychrometric chart

(Each numeric described below is just for reference.)

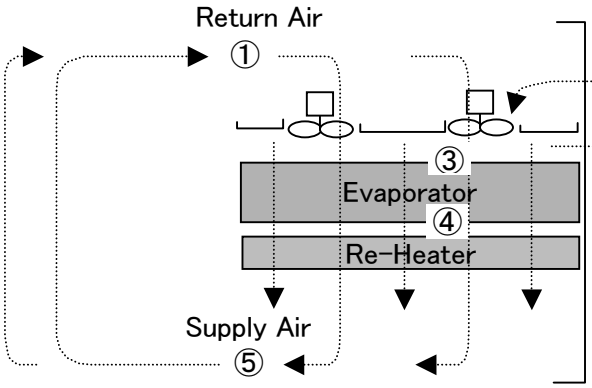

② Fresh Air (Ventilator open)

① Return Air
② Fresh Air
③ Mixed Air (Return Air + Fresh Air)
④ Cooled Air
⑤ Reheated Air (Supply Air)

Fresh air ② and return air ① are mixed. The mixed air is supplied to evaporator.
Q: How to get the mixed air ③ in psychrometric chart ?
(For example, fresh air intake is adjusted with 20 % opening of ventilator. ②20℃/RH=70%, ①2.0℃/RH=60%)
A: Make a line between ① and ② and get proportional point ③ of 20% from fresh air intake ① or another 80% from ②.

When fresh air is taken by opening ventilator, dehumidification control might be requested.

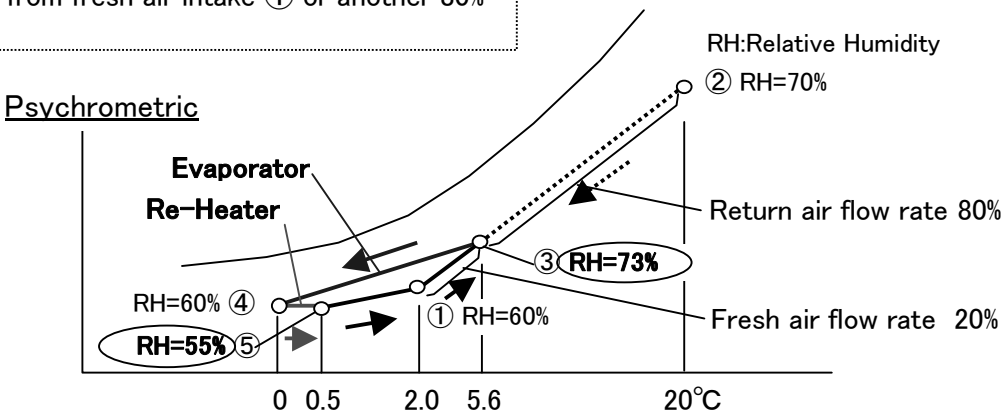

1.Mixed Air ③ (RH=73%) obtained from return air ① and fresh air ② is cooled down passing through evaporator and goes to ④.

2.Then the air is heated up passing through re-heater and goes to ⑤ (RH=55%).

3.Resulting, relative humidity RH=73% at ③ can be reduced to 55% at ⑤ passing through the evaporator and re-heater.
This is dehumidification control operation.

4. Further air ⑤ returns back to ① by cooling down the cargo.

● Dehumidification control operation

＊ Set dHU "ON" to controller when the dehumidification control is requested.
＊ The dehumidification control is performed by energizing RSV only during capacity control in chilled operation.
I.e. the RSV is turned off when the control temperature rises to out of capacity control.

dHU lamp is lit while dHU is set "ON"

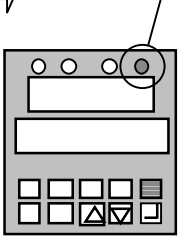

Note 1. dHU lamp is lit during pull-down or when control temperature is out of capacity control in chilled operation.

Note 2. dHU lamp is lit even in frozen operation. It's recommended that dHU is set "OFF" as dehumidification control is not performed in frozen operation.

DAIKIN

TECHNICAL INFORMATION

DAIKIN INDUSTRIES LTD
AFTER SALES SERVICE DIV.

Subject	Automatic pump down
Model	LXE10E100 or later, LXE10E-A, LXE10E-1

● How to go to AUTO PUMP DOWN operation ?

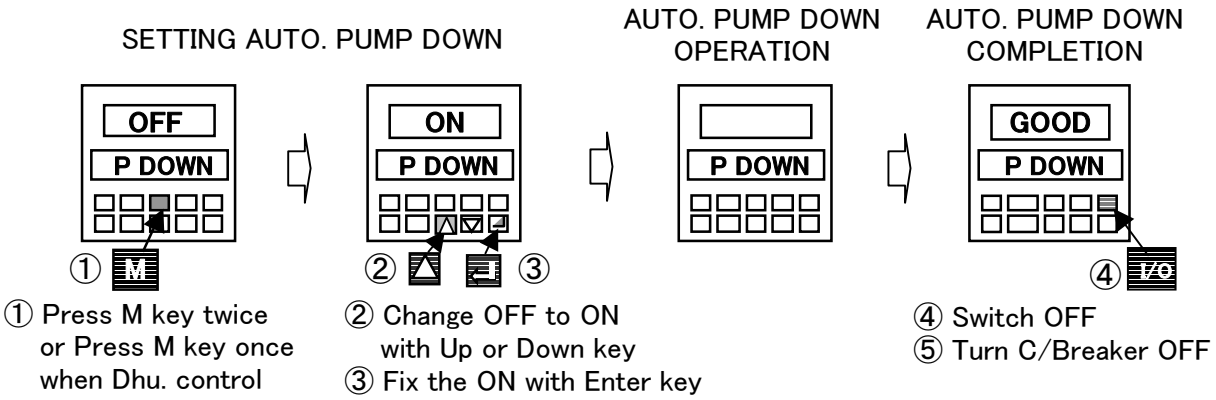

● What is AUTO PUMP DOWN used for ?

[1] REPLACEMENT OF DRIER

This is a main purpose of automatic pump down operation.

＊ As soon as the automatic pump down operation is completed, loosen the flare nuts of the drier and then quickly replace the drier with a new one.

＊ No vacuum-dehydration is requested after replacement of drier.

Attention !!

If no sound of gas refrigerant leakage is confirmed when the flare nuts of the drier are loosened, air mixing into the piping is suspected. In this case, conduct vacuum-dehydration from the service port (No.3) at the inlet side of drier.

[2] RECOVERY OF REFRIGERANT

＊ Conduct the automatic pump down operation in advance, and then recover the refrigerant.

＊ Refer to 4.1.4 for more detail.

[3] REFRIGERANT CHARGE (3rd step)

＊ Operate the automatic pump down when the specific refrigerant amount can not be charged due to the pressure balance.

＊ Refer to 4.1.4 for more detail.

Subject	Automatic pump down LXE10E-A 2/2

● How is AUTO PUMP DOWN operated ?

Step	①	②	③	④	⑤
	[Preperation] Enter Automatic pump down. ⇩ Normal operation for 30 sec. *1	[Pump-down] *2 Pump down start ⇩ Compressor stops at LP≦-55kPa	[Pump-down] *2 Compressor continues to stop for 20 seconds.	[Pressure equalizing] Full stop for 40 sec. ⇩ Increase LPT to 0～300Kpa	[Termination] EV full close ⇩ Termination GOOD
COMP	ON	ON	OFF	OFF	OFF
EFM	High	High	High	OFF	OFF
CFM	ON	ON	ON	OFF	OFF
LSV	ON				
ESV		ON			
ISV				ON (2nd) *3	
HSV				ON (1st) *3	
DSV					
BSV					
RSV					
SMV	100%	100%	100%	100%	100%
EV	20%	40%	40%	40%	0%

*1 If HPT>1700kPa, the 30 sec. operation is cancelled.

*2 Pump-down operation ②⇒③ is repeated maximum 3 times in some conditions.

*3 If LPT>0 kPa after the 40 sec. full stop, HSV ON⇒ISV ON are cancelled.

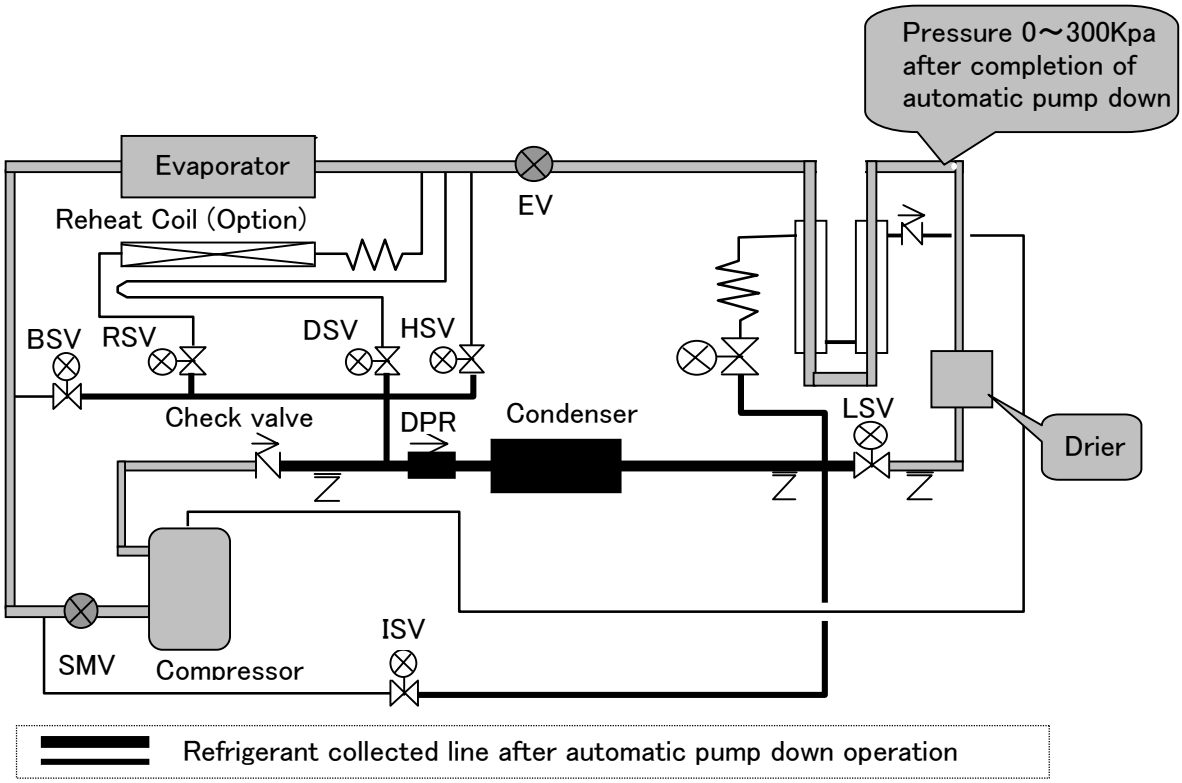

DAIKIN

TECHNICAL INFORMATION

DAIKIN INDUSTRIES LTD
AFTER SALES SERVICE DIV.

Subject	How to use 5 service ports
Model	LXE10E100 or later, LXE10E-A

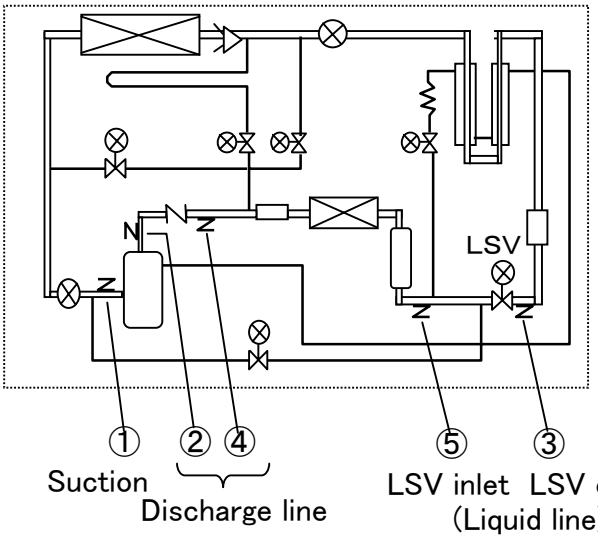

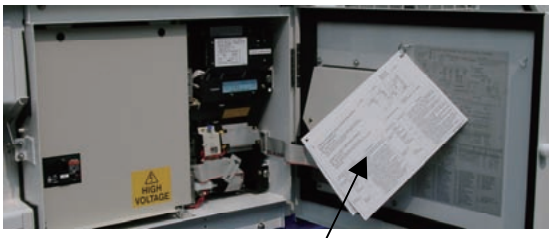

Instruction Cards

How to use
5 service ports

Service work		Service port	Remarks
Pressure Check	High pressure	②	Take care that the high pressure at the port ④ & ⑤ will be keeping for a while after the unit stops. (④ & ⑤ are in closed line between check valve and LSV.)
	Low pressure	①	
Refrigerant Charge	[1] Refrigerant Recovery	⑤	Recover refrigerant from port ⑤ after operating Automatic Pump-Down first.
		④ & ⑤	Recover completely refrigerant left in the unit from port ④ & ⑤.
	[2] Vacuum & Dehydration	④ & ⑤	After recovering, vacuum from port ④ & ⑤. *BSV,DSV,HSV & ISV are reversible in flow. *The connection at port ④ is same size as at ① for low pressure .
	[3] Liquid charging	⑤→③	After vacuuming, charge liquid refrigerant from ⑤ first and then from ③.
			If not reached to the specified charge amount of R134a, go to next below.
Note: Confirm the specified charge amount of R134a described in model name plate.		③	1.Operate Automatic Pump-Down first and stop it using ON/OFF switch when the compressure stops during the Automatic Pump down operation. 2. Charge liquid refrigerant from port ③.

DAIKIN

TECHNICAL INFORMATION

DAIKIN INDUSTRIES LTD
AFTER SALES SERVICE DIV.

Subject	The specified charge amount of R134a
Model	LXE10E100 or later, LXE10E-A, LXE10E-1

Air & Water cooled type

Model name (2004～)	R134a
LXE10E- 1～1E	5.2 kg

Model name (2010～)	R134a
LXE10E 101A, 102A	5.8 kg

Air cooled type

Model name (2002～2007.3)	R134a
LXE10E- A4	4.6 kg
LXE10E- A5-A5E	4.6 kg
LXE10E- A6	4.6 kg
LXE10E- A7	4.6 kg
LXE10E- A8	4.6 kg
LXE10E- A9-A9B	4.6 kg
LXE10E- A11	4.6 kg
LXE10E- A12-A12F	4.6 kg
LXE10E- A14	4.6 kg
LXE10E- A15-A15H	4.6 kg
LXE10E- A16	4.6 kg
LXE10E- A17-A17A	4.6 kg
LXE10E- A18-A18D	4.6 kg
LXE10E- A19-A19A	4.6 kg
LXE10E- A20	4.6 kg
LXE10E- A21-A21C	4.6 kg
LXE10E- A24	4.6 kg
LXE10E- A26-A26D	4.6 kg
LXE10E- A27-A27B	4.6 kg
LXE10E- A29-A29A	4.6 kg
LXE10E- A31-A31B	4.6 kg
LXE10E- A32-A32A	4.6 kg
LXE10E- A33	4.6 kg
LXE10E- A35-A35A	4.6 kg
LXE10E- A36	4.6 kg
LXE10E- A37	4.6 kg
LXE10E- A40 ??	4.6 kg
LXE10E- A45	4.6 kg

Model name (2007/4～)	R134a
LXE10E- A5F	4.8 kg
LXE10E- A9C	4.8kg
LXE10E- A15J	4.8 kg
LXE10E- A21D	4.8 kg
LXE10E- A26E	4.8 kg
LXE10E- A32B	4.8 kg
LXE10E- A33A	4.8 kg
LXE10E- A35B	4.8 kg
LXE10E- A36A	4.8 kg
LXE10E- A40A	4.8 kg
LXE10E- A41	4.8 kg
LXE10E- A43	4.8 kg
LXE10E- A44	4.8 kg
LXE10E- A45A	4.8 kg

Model name (2008～)	R134a
LXE10E 132A	5.4kg
LXE10E 133A	5.4 kg
LXE10E 135A	5.4 kg
LXE10E 136A	5.4 kg
LXE10E 144A	5.4 kg
LXE10E 145A	5.4 kg

Note: Confirm the specified charge amount of R134a described in model name plate

---Model name plate---

DAKIN INDUSTRIES, LTD.

LXE10E -A45A MFG.NO. -----

REFRIGERANT [R134a] 4.8 kg

DAIKIN

TECHNICAL INFORMATION

DAIKIN INDUSTRIES LTD
AFTER SALES SERVICE DIV.

Subject	Pressure Check & Refrigerant Charge (1/2) (Appendix for "How to use 5 service ports")
Model	LXE10E100 or later, LXE10E-A

[1] Operation Pressure Check

Operation Pressure Check

Check high pressure from the service port ② on the compressor discharge.
Check low pressure from the service port ① on the compressor suction.

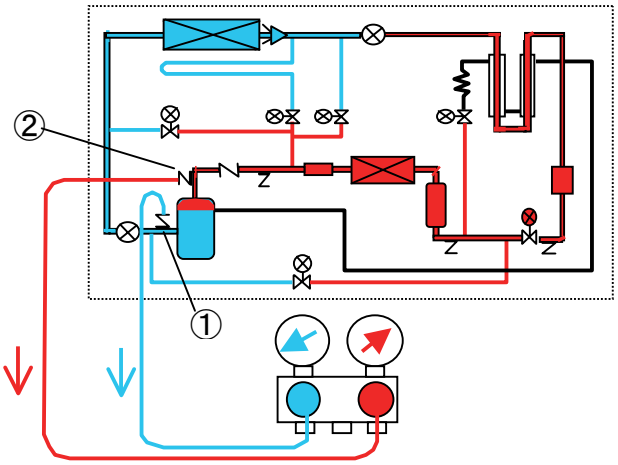

[2] Refrigerant Charge

Refrigerant Recovery

1. Operate **Automatic Pump Dpwn** first.
2. Then recover refrigerant from port ⑤.
3. Recover completely refrigerant left in the unit from ports ④&⑤.

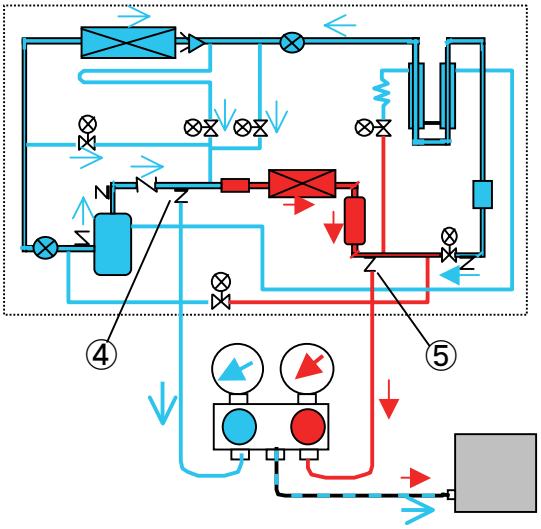

Vacuum & Dehydration

1. After recovering, vacuum and dehydrate from ports ④ & ⑤.

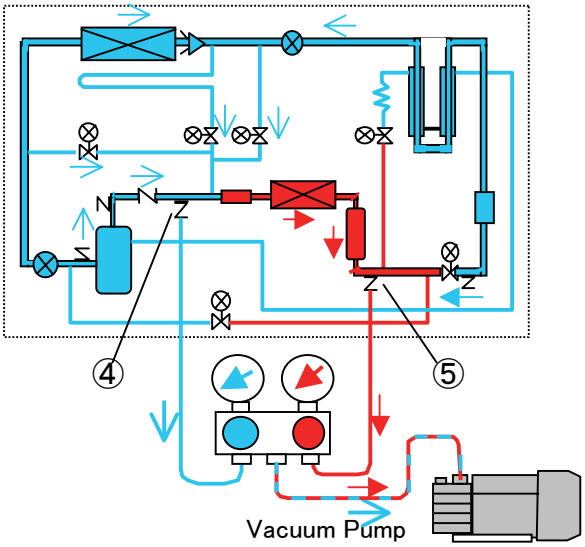

Subject | Refrigerant Charge (2/2)

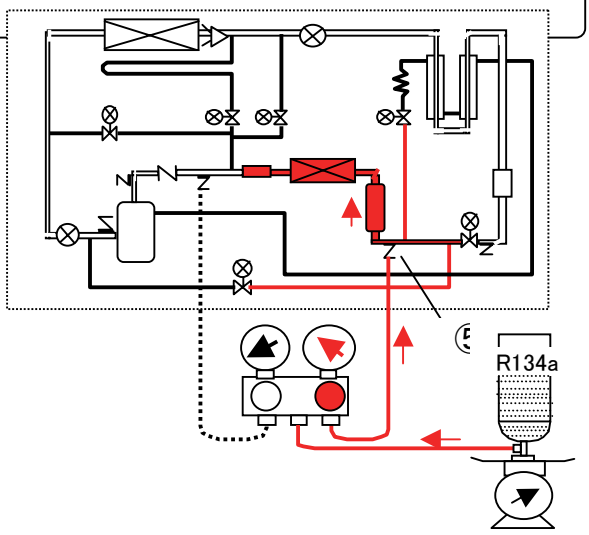

Refrigerant charge, 1st Step

1. After vacuum & dehydration, charge the liquid refrigerant from port ⑤.
(Aprrox. **50%** of the specified charged amount will be charged.)

Refrigerant charge, 2nd Step

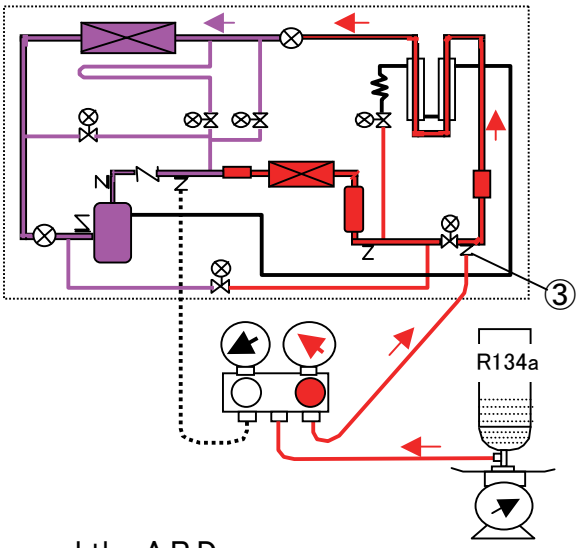

2.Replace the manifold gauge hose to port ③ and add the liquid refrigerant. Then if it reached to the specified amount, close the cock of the refrigerant cylinder.

If it is still not reached to the specified amount due to the pressure valance, close the cock of the refrigerant cylinder and go to next 3rd step.

Refrigerant charge, 3rd Step

3. Operate automatic pump down (A.P.D).
When the compressor stops during the operation, end the A.P.D operation using Unit ON/OFF switch.

Attention !! The compressor stops twice during the A.P.D operation.
It is possible to end the operation either at the 1st stop or at the 2nd stop.
＊Be sure not to go to the completion, GOOD displayed, of A.P.D.

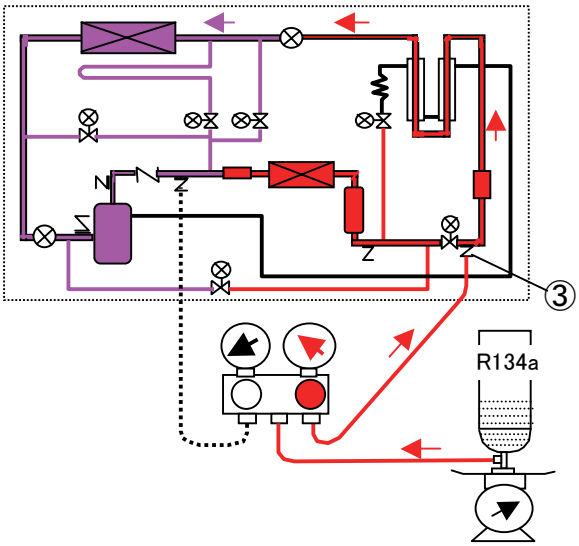

4. Open the cock of the ref. cylinder and add the liquid refrigerant. from port ③.
Then if it reached to the specified amount, close the cock of the ref. cylinder.

CONTROLLER 5

DAIKIN

TECHNICAL INFORMATION

番号:----

DAIKIN INDUSTRIES LTD
AFTER SALES SERVICE DIV.

Subject	CONTROL PANEL
Model	LXE10E100 or later, LXE10E-A, LXE10E-1

LXE10E100 or later

LXE10E-A

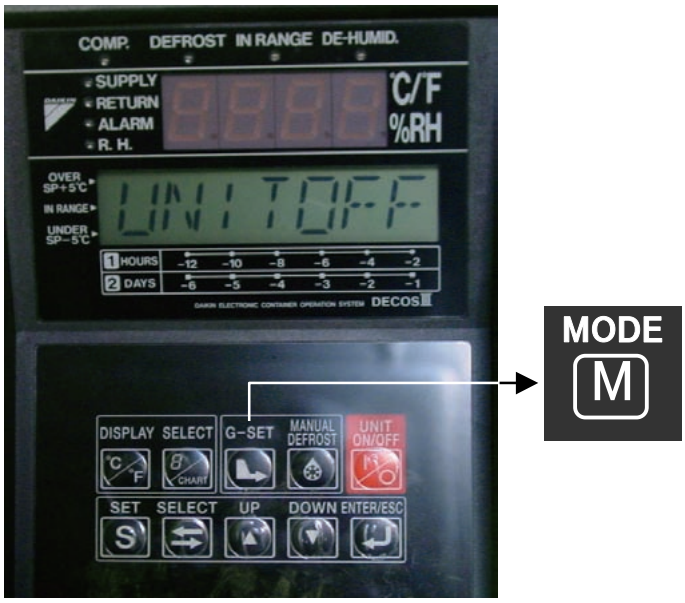

LXE10E-1

4.2 Operation procedure
4.2.1 Operation procedure flow chart

[Normal Operation]

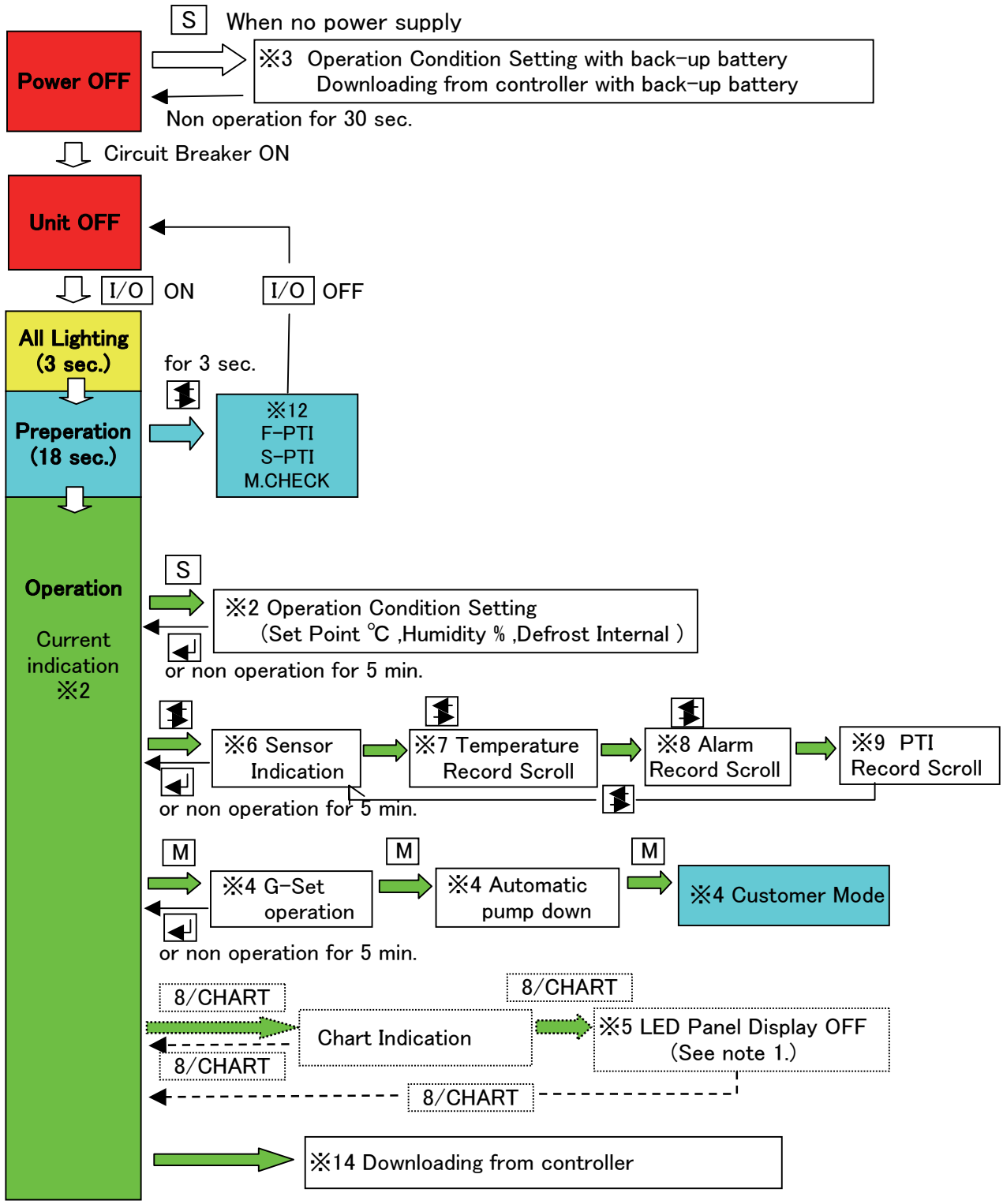

I/O :Unit On/Off key S :S key : Select key : Enter key 8/CHART :8/Chart key
G : G key

Note 1. ※5 activates when the "dISP" in ※11 is set to "ON".

4.2 Operation procedure
4.2.1 Operation procedure flow chart

[Configration]

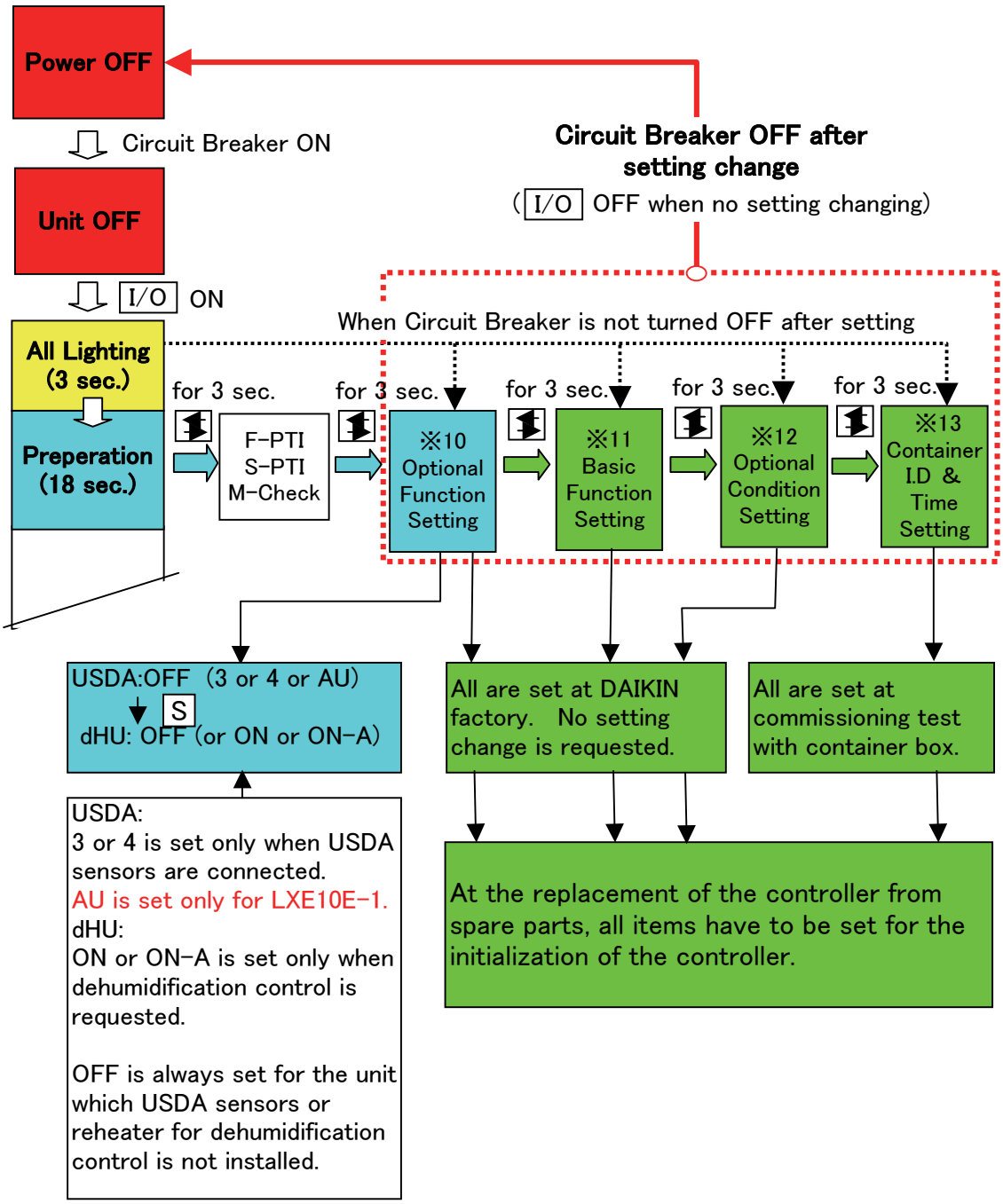

Alarm list

	Alarm	Alarm contents	Action with alarm
Permanent stop	F101	After powered on,if HPS activates before the compressor starts. Or the compressor fails to start 5 times.	Unit stops
	F109	If the low pressure becomes −90kPa or lower within 2 sec. after compressor started.	Unit stops
	F111	Error in communication between the CPU and I/O board.	Unit stops
	F301	Temperature setting request (Error in the CPU board)	Unit stops
	F401	SS/DSS/RS air sensor malfunction (at chilled mode)	Unit stops
	F403	RS/DRS/SS air sensor malfunction (at partial frozen mode)	Unit stops
	F603	If the initial setting of the controller is wrong, or if the suction modulation valve (SMV) dose not close even when instructed to close.	Unit stops
	F701	Error in power supply voltage (530V or more, 300V or less)	Unit stops
	F705	S phase became open phase	Unit stops
	F803	If any of the following conditions are applicable, 1) E107 is generated twice due to EV opening error. 2) Error are identified in the 2 evaporator fans. (Refer to E205) 3) The contacts of magnetic switch for the compressor is welded. 4) 2 of the HPT, LPT and DCHS sensor are abnormal.	Unit stops
Only alarm display or restartable alarm	E101	High-pressure switch activated during normal operation.	Restart after 3 min.
	E103	CTP or electronic OC activated during normal operation.	Restart after 3 min.
	E105	Micro processor OC activated during normal operation.	Restart after 3 min.
	E107	DCHS is excessively hot during operation EV opening error continues 5 minutes.	Restart after 3 min.
	E109	Low pressure drops to −90kPa or lower for 2 seconds or longer successively during normal operation or low pressure is higher than 400kPa for 5 minutes or longer successively	Restart after 3 min.
	E201	Pump down is not completed within 120 seconds.	Only alarm display
	E203	Overcool protection activates in the chilled or partial frozen mode. (Control temperature =< SP−3℃ and 3 minutes elapse)	Restart after 3 min.
	E205	Abnormal lock current at the evaporator fan motor is detected. (E205 if a fan motor faulty, and F803 if two fan motors are faulty.)	Restart after 3 min.
	E207	Defrosting is not completed within 90 minutes (Within 120 minutes if the inside temperature is −20 deg.C or lower)	Only alarm display
	E303	Humidity setting required (CPU board malfunction)	Only alarm display
	E305	Defrost timer setting required (CPU board malfunction)	Only alarm display
	E307	Calendar setting required (CPU board malfunction)	Only alarm display
	E311	Trip-start setting required (CPU board malfunction)	Only alarm display
	E315	PT/CT board malfunction	Restart after 3 min.
	E401	Supply air temperature sensor (SS) malfunction	Back-up operation
	E402	Date recorder supply air temperature sensor (DSS) malfunction	Back-up operation
	E403	Return air temperature sensor (RS) malfunction	Back-up operation
	E404	Date recorder return air temperature sensor (DRS) malfunction	Back-up operation
	E405	Discharge gas temperature sensor (DCHS) malfunction	Only alarm display
	E406	Suction gas temperature sensor (SGS) malfunction	Back-up operation
	E407	Evaporator inlet temperature sensor (EIS) malfunction	Back-up operation
	E409	Evaporator outlet sensor (EOS) malfunction	Back-up operation
	E411	Ambient sensor (AMBS) malfunction	Only alarm display
	E413	Low pressure transducer (LPT) malfunction	Back-up operation
	E415	High pressure transducer (HPT) malfunction	Back-up operation
	E417	Voltage sensor (PT1) malfunction	Only alarm display
	E421	Current sensor (CT1) malfunction	Only alarm display
	E423	Current sensor (CT2) malfunction	Restart after 3 min.
	E425	Pulp temperature sensor (USDA1) malfunction	Only alarm display
	E427	Pulp temperature sensor (USDA2) malfunction	Only alarm display
	E429	Pulp temperature sensor (USDA3) malfunction	Only alarm display
	E431	Humidity sensor (Hus) malfunction	Only alarm display
	E433	Cargo temperature sensor (CTS) or box temperature sensor (CBS) malfunction	Only alarm display
	E603	SMV(MV) board or SMV(MV) driver malfunction or EV connection error	Back-up operation
	E607	MDS (sheet key) malfunction	Only alarm display
	E707	Momentary power failure	Restart after 3 min.
	E801	Exhausted battery for the CPU board	Only alarm display
	E805	FA sensor malfunction	Only alarm display
	E807	The ventilator open during frozen operation.	Only alarm display

s

11.5 Temperature sensor characteristics
SS/RS/DSS/DRS/RSS/RRS/EIS/EOS/SGS/AMBS

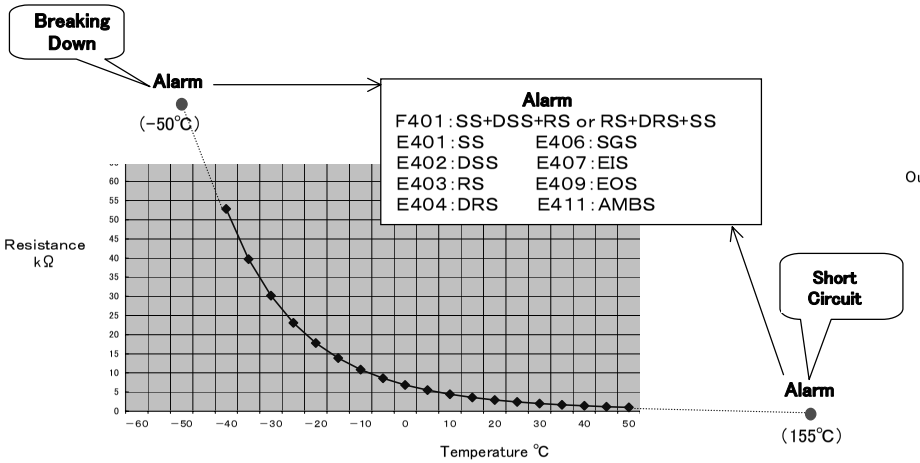

Sensor alarm will be happened at
＊Breaking down (Wire cut, Disconnect or loosen at terminal or socket, --- so on)
＊Short cuircuit

11.6 Temperature sensor charcteristics
DCHS

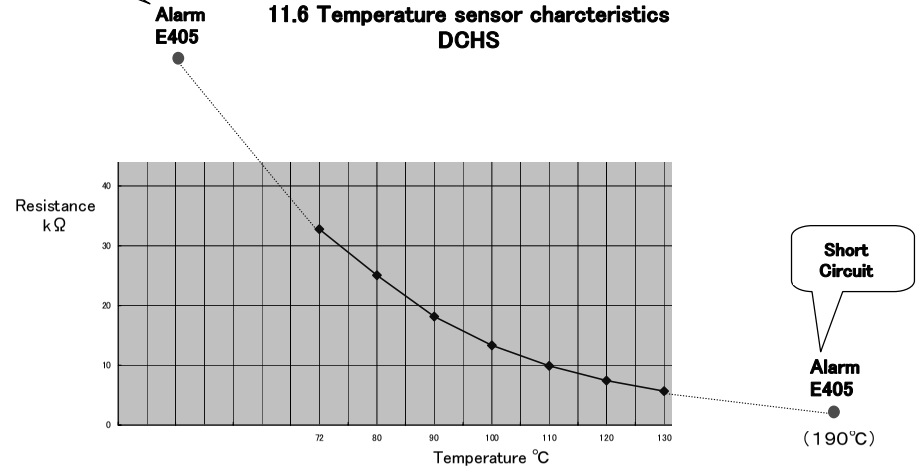

11.7 High pressure transducer characteristics
HPT

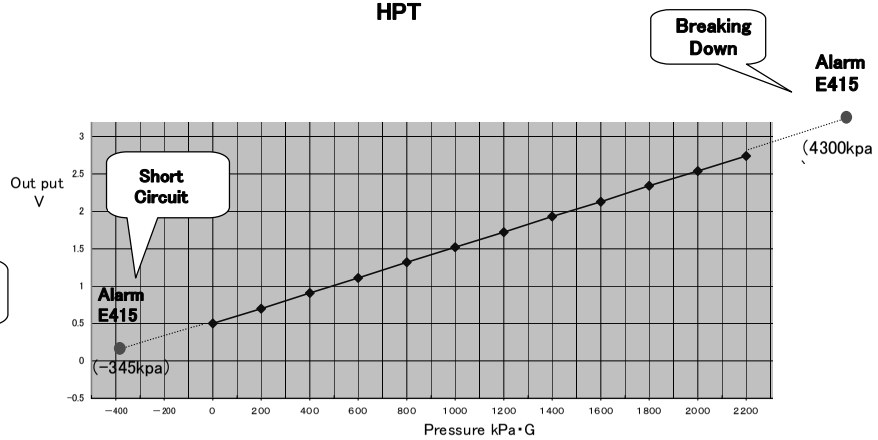

Sensor alarm will be happened at
＊Breaking down (Wire cut, Disconnect or loosen at terminal or socket, --- so on)
＊Short cuircuit

11.8 Low pressure transducer characteristics
LPT

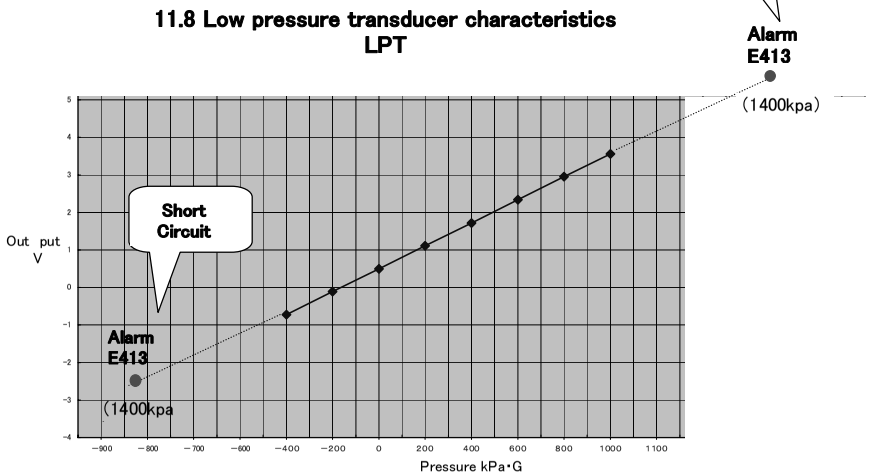

DAIKIN

TECHNICAL INFORMATION

番号:----

DAIKIN INDUSTRIES LTD
AFTER SALES SERVICE DIV.

Subject	CHARTLESS FUNCTION 1/2
Model	LXE10 or later, LXE10E-A, LXE10E-1, LXE10D

● What for CHARTLESS FUNCTION?

[Before]

Temperature Recorder with Partlow chart ⇨ Temperature Recorder with Partlow chart with Datacorder ⇨

[Currently]

CHARTLESS FUNCTION with Datacorder

⇩

--- 5 CHARTLESS FUNCTIONS ---
[1] Chart Indication
[2] Pull-Down Time Indication
[3] Temperature record scroll indication
[4] Alarm record scroll indication
[5] H & D Code Indication

[1] Chart Indication

The temperature record data are indicated in graphic chart on LCD.

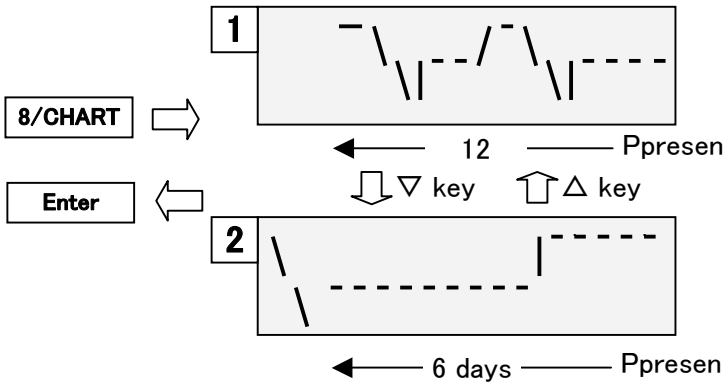

＊To perform "Pull-Down Time Indication" ,set "CHRTLS" to "ON".
＊It's recommended to set it for the unit not installed the temperature recorder.

[2] Pull-Down Time Indication

The control temperature and pull-down time are alternately indicated in LED during pull-down opearion.

	LED	
Example :	P000	--- Pull-Down Time : Start to 1 hr
	P001	--- Pull-Down Time : 1 hr to 2 hr
	P002	--- Pull-Down Time : 2 hr to 3 hr

[3] Temperature Record Scroll Indication

Press SELECT key twice, and controll temperature in passed 7 days in maximum is displayed in sequence (scroll).

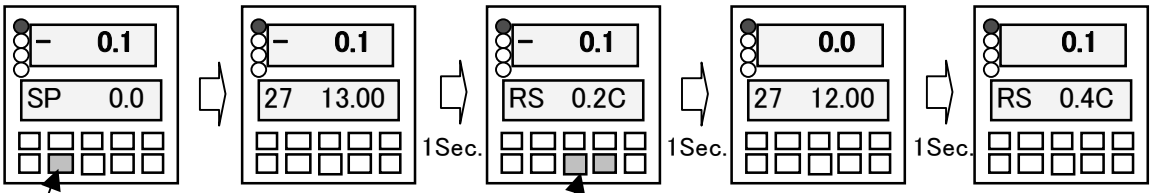

Press SELECT key twice

To pauze the scroll indication, press ▽ or △ key. Then the indication can be seen one by one by further pressing ▽ or △ key.

SP 0.0℃
SS –0.1℃
(Date 2007.2.27)
(Time 13:30)

SS –0.1℃
Date '07.2.27
Time 13.00

SS –0.1℃
RS 0.2℃

SS 0.0℃
Date '07.2.27
Time 12.00

SS 0.1℃
RS 0.2℃

[4] Alarm Record Scroll indication

Press SELECT key 3 times, and alarm code in passed 7 days in maximum is displayed in sequence (scroll).

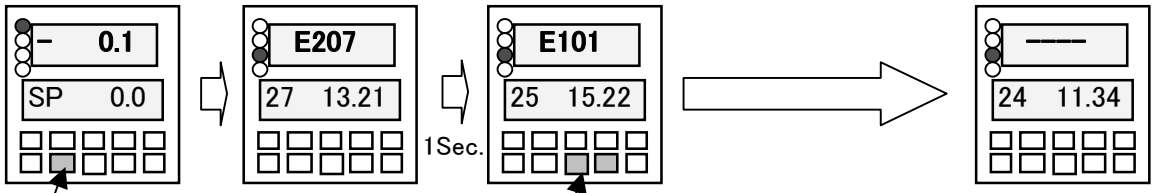

Press SELECT key 3 times.

To pauze the scroll indication, press ▽ or △ key. Then the indication can be seen one by one by further pressing ▽ or △ key.

SP 0.0℃
SS –0.1℃

Alarm E207
Date '07.2.27
Time 13.21

E101
'07.2.25
15.22

'07.2.24
11.34
Date and Time for final alarm

[5] H & D Code Indication

Abnormal temperature record are indicated as on the LED.

LED

Example :

H001	--- when control temperature does not decrease by 3℃ or more for every 4 hrs during pull-down
H002	--- when the total out of in-range reaches 2 hrs.

---- 2 methods for canceling H & D code ---
1. Press ENTER key for 3 seconds.
2. Automiatically canceled when the power supply is turned off for 3 days.

DAIKIN

TECHNICAL INFORMATION

番号:----

DAIKIN INDUSTRIES LTD AFTER

Subject	S-PTI Judgment (1/2)
Model	LXE10E-A, LXE10E-1

Operation condition : -10℃＜AMBS≦43℃ RS≧AMBS-15℃

If RS＜AMBS-15℃, J201(P20)/J221(P22) /J301(P30) might be appeared.

Step	Content	Operation	Judgment	Alarm
P00	Basic data recorded (Container I.D No.,date ,time,compressor run hour ,ambient temperature)	Searches PTI header information		
P02	Alarm check on all sensors	Checks alarms of all sensors		
P04	Power conditions check (Voltage and Frequency)	Checks power supply		
P05	Compressor start running check	Checks compressor starting conditions	HPS actuates? Over-current actuates?	J051
P06	HPS OFF & ON check	HPS OFF value Check Comp. run + CFM stop ⇩ HPS ON value Check Comp. stop + CFM run	HPS OFF out of 2000<=HPT<=2900Kpa	J061
			HPS OFF<2900Kpa or Non HPS OFF after CFM stops	J064
			Non HPS ON (HPT<1500Kpa) after HPS OFF with 3 minutes elapsed	J065
	2400<HPS OFF<2900Kpa 1500<=HPT<=2200Kpa		Non HPS ON (HPT>=1500Kpa) after HPS OFF with 3 minutes elapsed	J062
			HPS ON out of 1500<=HPT<=2200Kpa	J063
P08	Pump-Down check	Pump-Down operation (LSV open→close)	LPT≦-55 Kpa within 2 Min.	J081
P10	Solenoid valve leakage check LSV, DSV, ISV, BSV, HSV, ESV	Compressor stops continuously after P08.	LPT≦350 Kpa within 3 Min. for DECOS3d & 3e	J101
			LPT≦200 Kpa within 3 Min. for DECOSc	
P12	SS & RS accuracy check	EFM runs in high speed (Comp. stop) for 3 min.	ABS(RS-DRS)≦1.5℃ and ABS(SS-DSS)≦1.5℃	J121
P14	HPT & LPT accuracy check	Operation of P12 is continued.	ABS(HPT-LPT)≦350Kpa	J141

Subject	S-PTI Judgment (2/2)

Step	Content	Operation	Judgment	Alarm
P16	EFM: High and low speed operation check	EFM in low speed operation for 30 sec. (Comp. stop) ⇩ EFM in high speed for 30 sec.	EFM running current at HIGH >1.8A & LOW >0.6A for LXE10E-A EFM running current HIGH > LOW for LXE10E-1	J161
P18	Start up	Comp. starts	No judgment	
P20	ESV: Opening and closing check	Comp. run + ESV close for 2 min. ⇩ ESV open for 30 sec.	(HPT at ESV open) -(HPT at ESV close) ≧30Kpa within 30 sec. or ≧10Kpa 30 sec later	J201
P22	BSV: Opening and closing check	BSV close for 20 sec. ⇩ BSV open for 30 sec.	(LPT at BSV open) -(LPT at BSV close) ≧20Kpa within 30 sec. or ≧10Kpa 30 sec later	J221
P24	DSV: Opening and closing check	DSV close for 20 sec. ⇩ DSV open for 30 sec.	(HPT at DSV close) -(HPT at DSV open) ≧50Kpa within 30 sec. or ≧40Kpa 30 sec later	J241
P26	Standard pull-down operation	Pull-down operation	no judgment	
P28	SMV: Operation check	Comp. run + SMV full open (328pls) ⇩ SMV 18% open (60pls) for 20 sec.	(LPT at SMV full open) -(LPT at SMV 18% open) ≧10Kpa or LPT < -20Kpa (LPT at SMV full open) -(LPT at SMV 3% open) >20Kpa for DECOS3c	J281
P29	EV: Operation check	Pump-down operation EV fully close	(LPT at EV 40% open) -(LPT at EV 10% open) > 50 Kpa for DECOS3d & 3e LPT≦-55 Kpa within 2 Min. for DECOS3c	J291
P30	ISV: opening and closing check	Heating operation, ISV close (Comp. run +BSV open) ⇩ ISV open for 2 min.	(SGS at ISV close) -(SGS at ISV open) ≧2 ℃	J301
P32	HSV: opening and closing check	Heating operation HSV/RSV close for 20 sec. ⇩ HSV open for 30 sec.	(HPT at HSV close) -(HPT at HSV open) ≧50Kpa within 30 sec. or ≧40 Kpa 30 sec later	J321
	RSV: opening and closing check	⇩ RSV open for 30 sec.	(HPT at CSV close) -(HPT at CSV open) ≧50Kpa within 30 sec. or ≧40 Kpa 30 sec later	J322

Subject	F-PTI Judgment
Model	LXE10E, LXE10E-1

S-PTI

Step	Content	Operation	Judgment	Alarm
P50	Pull-down from 10.0 ℃ to 0℃.	Pull-down operation is conducted with SP 0℃, then the pull down time is measured from SS=10.0 ℃ to 0.0 ℃ If SS is <10 ℃ at starting, heating operation is conducted untill SS=>10℃ first, then pull-down operation starts.	-10℃<=AMBS<=43.0℃	J501
			OK when pull down operation completes within 120 Min.	J502
P60	Controllability of chilled mode operation.	Checks operation in Modulating Control Range.	OK when operation completes within 60 mn. (or 10 min.)	----
P70	Defrosting	Conducts defrosting operation, measures defrosting time, and evaluates defrost function.	Out of stingting condition	J701
			OK when defrosting time <= 100 Min.	J702
P80	Pull-down from 0℃ to -18℃	Sets SP to -18℃,conducts pull-down operation, then measures pull down time and sensor values. Pull-down time is a time it takes for RS to decrease from 0℃ to -18℃.	OK when pull down operation completes within 180 Min.	J801
P90	Controllability of frozen mode operation.	Controls compressor ON/OFF to maintain constant inside temperature. After two starts/stops operations, when compressor turns on (pull down),sensor value at RS=-18℃ is obtained.	OK when operation =< 30 Min.	----

FUNCTIONAL PARTS

6

DAIKIN

TECHNICAL INFORMATION

番号:----
DAIKIN INDUSTRIES LTD
AFTER SALES SERVICE DIV.

	EV, Electronic Expantion Valve 1/2
Model	LXE10E100 or later, LXE10E-A, LXE10E-1, LXE10D

● CONSTRUCTION

EV for 10E100 or later (Direct driven type)

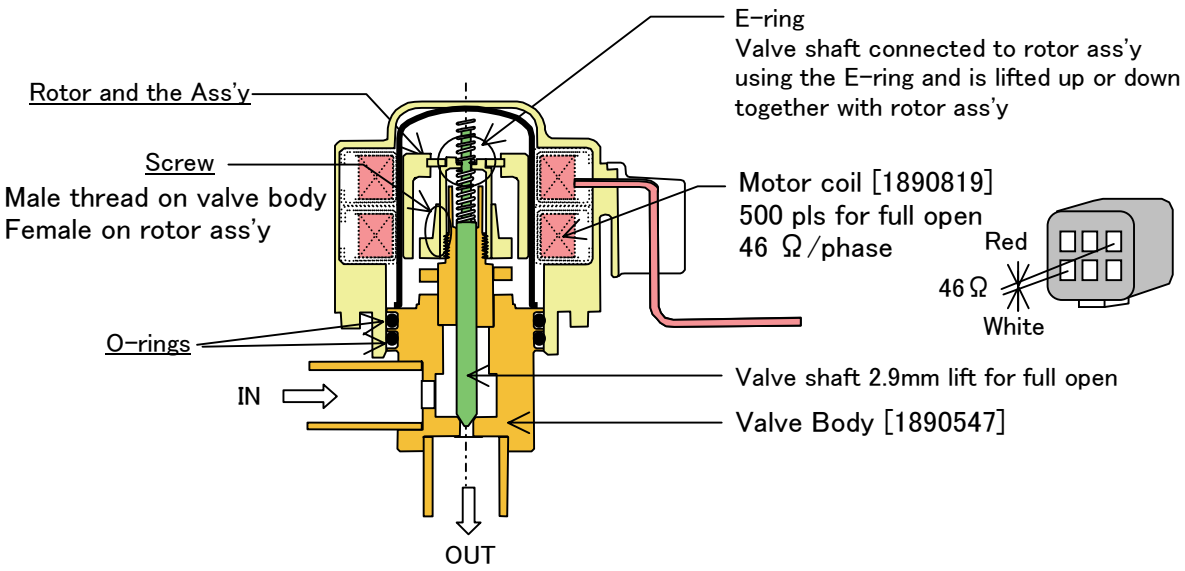

EV for 10E-A,10E-1,10D (Gear driven type)

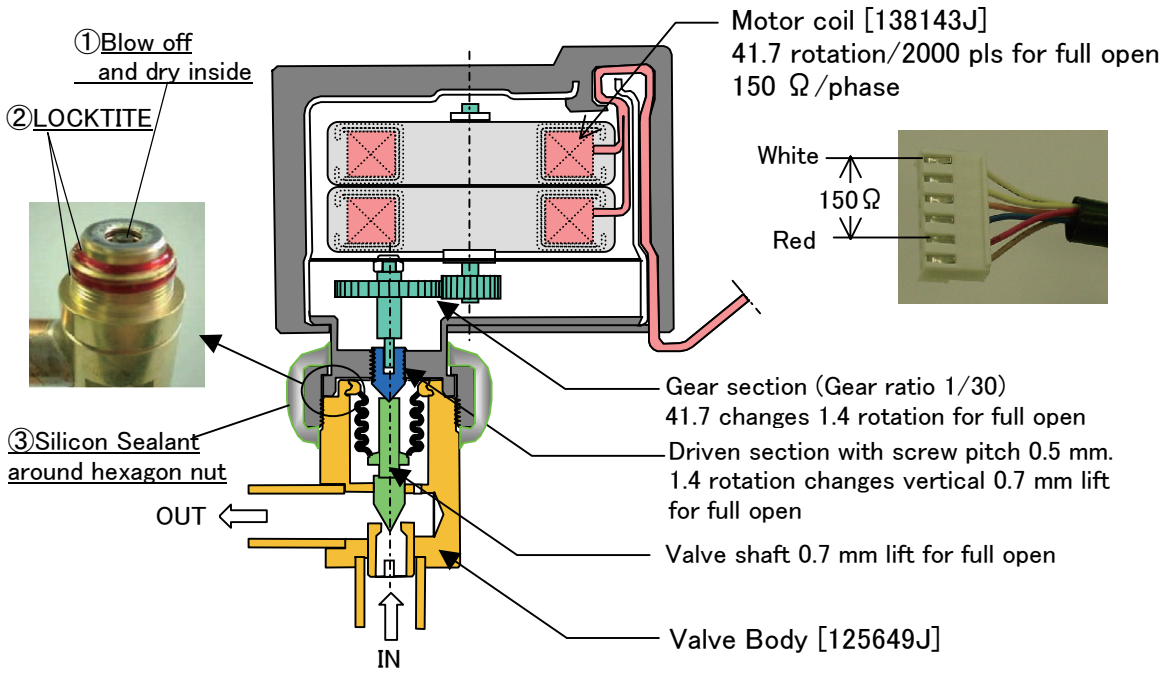

	EV, Electronic Expantion Valve 2/3
Model	LXE10E100 or later, LXE10E-A, LXE10E-1, LXE10D

● CAUTION at Coil Replacement or Reinstalling

EV for 10E100 or later (Direct driven type)

Be sure to fix support bracket after coil reinstalling.

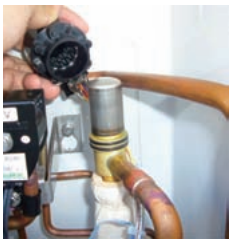

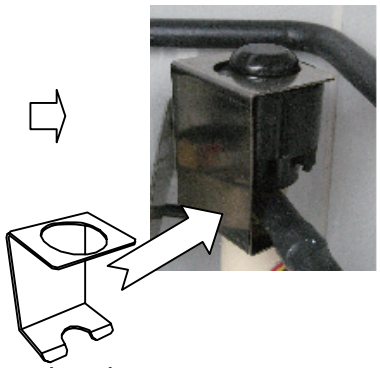

Support bracket

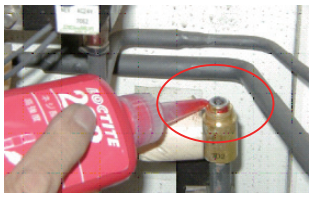

EV for 10E-A,10E-1,10D (Gear driven type)

[1] Check if valve shaft is lifted 0.7 mm. If no lifted, replace the valve body.

[2] Blow off and dry inside bellows.

[3] Put the LOCKTITE with 2 lines around screw and shoulder part.

Note !!

＊ Check back side using a mirror.

No lifted due to damaged bellows

[1] Push here (0.7 mm lift)

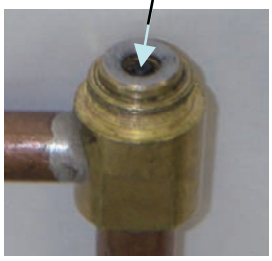

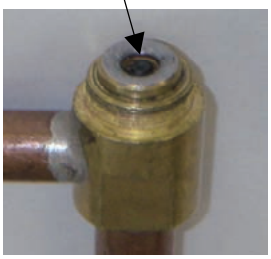

[4] After Installing EV coil to the body, plaster fully with SILICONE SEALANT around the flare nut between EV coil and body.

Note

＊ Check back side using a mirror.

[5] Clamp EV coil cable to the coil body and EV outlet pipe

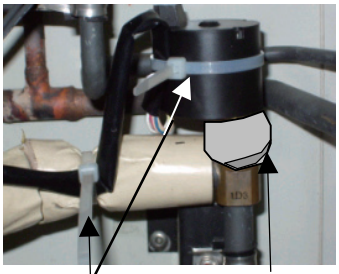

[5] Clamp

[4] Silicone Sealant

	EV, Electronic Expantion Valve 3/3
Model	LXE10E100 or later, LXE10E-A, LXE10E-1, LXE10D

● **Pulse Motor Drive System**

This explains how pulse motor rotates by giving pulse from controller.
Suction Modulation Valve (SMV) has same principal movement as the EV.

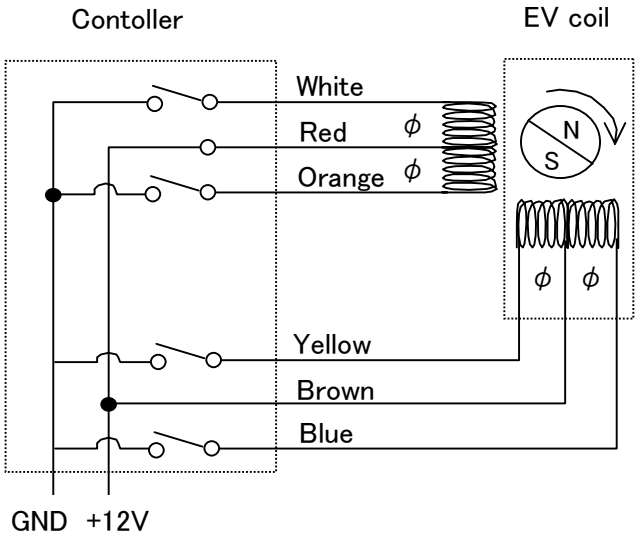

Schematic diagram of the pulse motor, 4-phase pulse motor,used in the electronic exp. valve is shown on the left $\phi 1, \phi 2, \phi 3, \phi 4$:Coil.
1 is called first phase coil

When a current flows in the sequence of $\phi 1 \rightarrow \phi 2 \rightarrow \phi 3 \rightarrow \phi 4 \rightarrow \phi 1 \rightarrow$---, it makes counterclockwise direction.
When a current flows in the reverse of $\phi 4 \rightarrow \phi 3 \rightarrow \phi 2 \rightarrow \phi 1 \rightarrow \phi 4 \rightarrow$---, it makes clockwise direction.

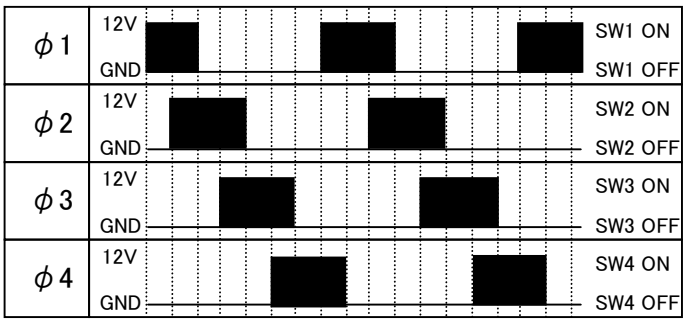

On actual wiring the direction is provided by swtching over SW1 to SW4 in turn.
Two adjacent coils are energized in overlap, 2-phase energizing, shown on the left and below,and then the current switching makes the rotation.

Valve open $\phi 1 \rightarrow \phi 1/\phi 2 \rightarrow \phi 2 \rightarrow \phi 2/\phi 3 \rightarrow \phi 3 \rightarrow \phi 3/\phi 4 \rightarrow \phi 4 \rightarrow \phi 4/\phi 1 \rightarrow$
Valve close $\phi 1 \rightarrow \phi 1/\phi 4 \rightarrow \phi 4 \rightarrow \phi 4/\phi 3 \rightarrow \phi 3 \rightarrow \phi 3/\phi 2 \rightarrow \phi 2 \rightarrow \phi 2/\phi 1 \rightarrow$

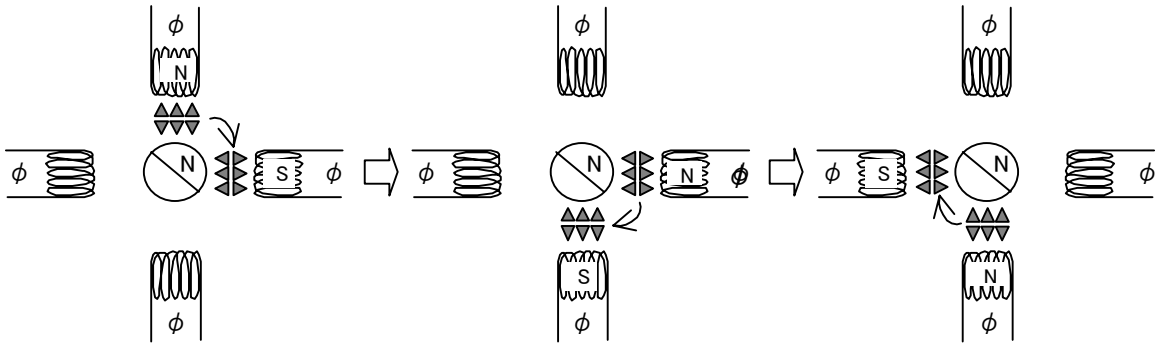

	SMV, Suction Modulation Valve 1/2
Model	LXE10E100 or later, LXE10E-A, LXE10E-1

● INITIAL MOVEMENT for FULL OPEN

SMV for 10E100 closes fully first and then opens fully when power ON.
SMV for 10E-A opens fully when Power ON.

SMV for 10E100 or later

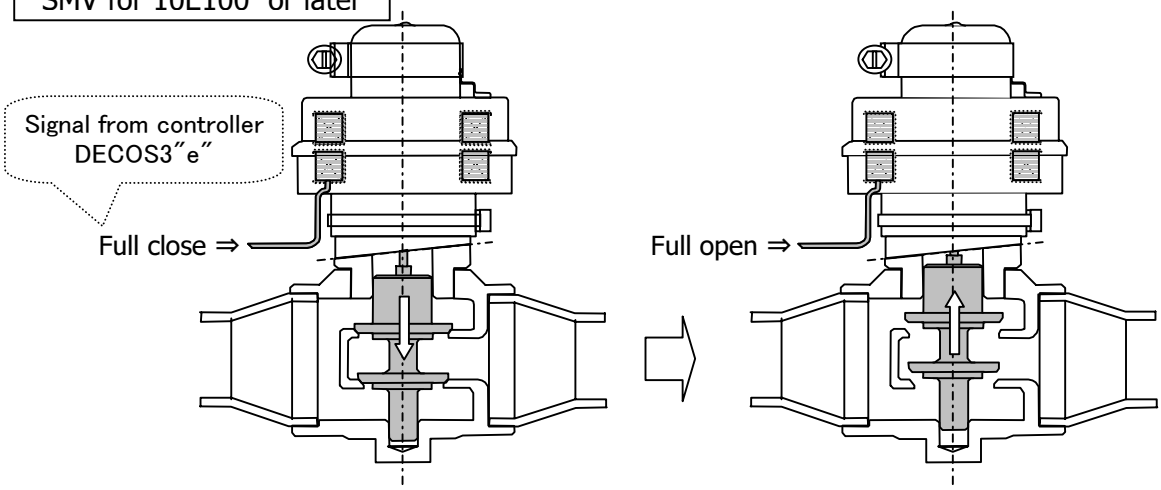

Power ON (C/B ON) >> Full Close >> Full Open

SMV for 10E-A, 10E-1

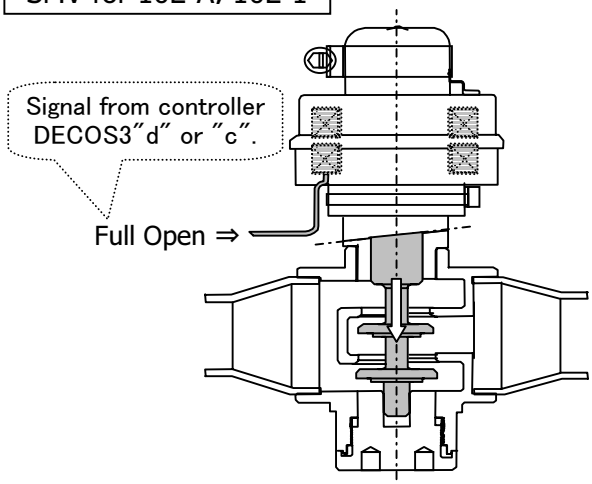

Power ON (C/B ON) >> Full Open

	SMV, Suction Modulation Valve 2/2
Model	LXE10E100 or later, LXE10E-A, LXE10E-1

● CONSTRUCTION

SMV for 10E100 or later

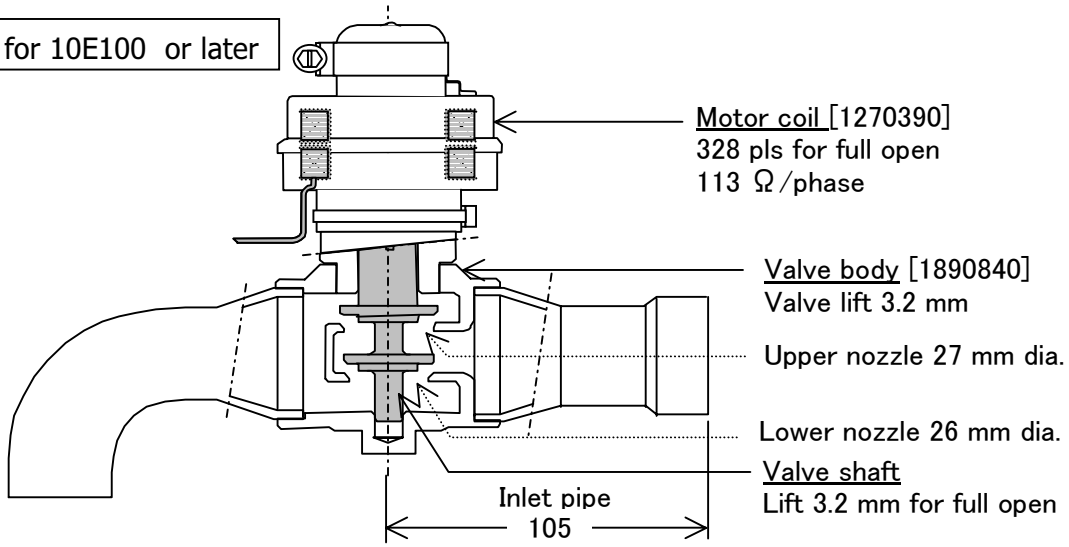

SMV for 10E-A, 10E-1

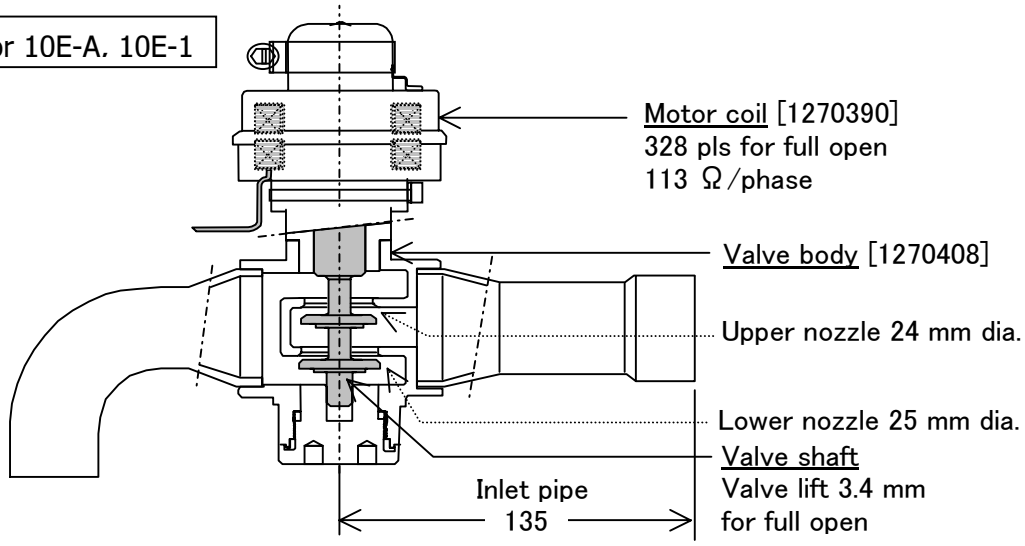

● INTERCHANGEABILITY of valve bodies

Valve Bodies for LXE10E100 and LXE10E-A are not interchangeable.
The process of the initial movement to "full open" posision after the power is turned on is different from each other as the construction is different.

Don't install them mistakenly.
They are quite similar in appearance but can be differenciated by the length of the inlet pipe as shown above.

DAIKIN

TECHNICAL INFORMATION

DAIKIN INDUSTRIES LTD
AFTER SALES SERVICE DIV.

Subject	SOLENOID VALVE
Model	LXE10E100or later, LXE10E-A, LXE10E-1, LXE10D

COIL
(0955287)

BODY
NEV-8030DX
Inlet/Outlet 3/8″
(0944566)

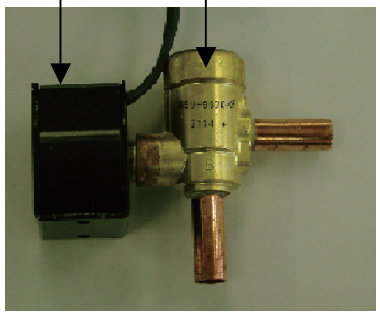

BODY
NEV-2020DXF
Inlet/Outlet 1/4″
(0088738)

COIL
(0955287)

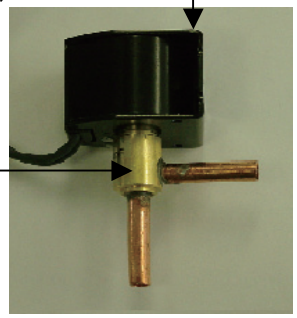

Coil Energized
(During Operation)

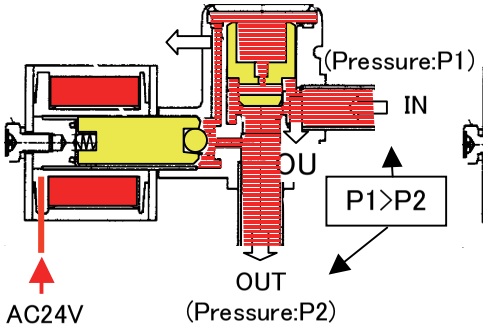

Coil De-energized

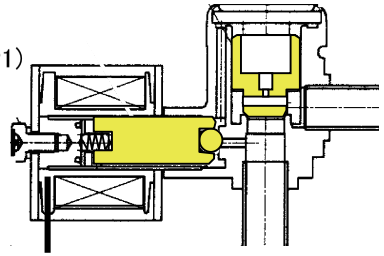

Coil De-energized
(During Vacuum & Dehydration)

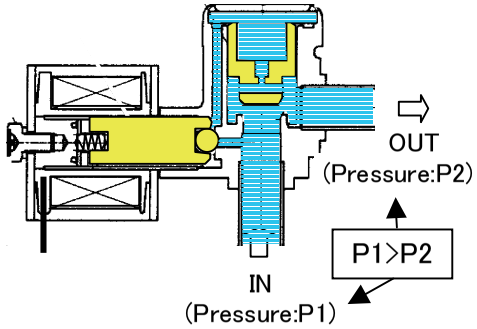

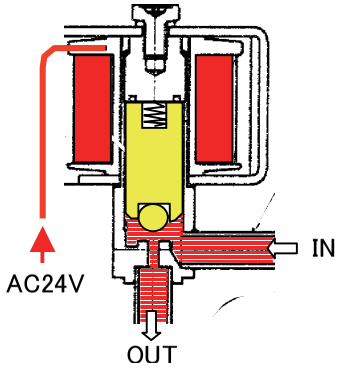

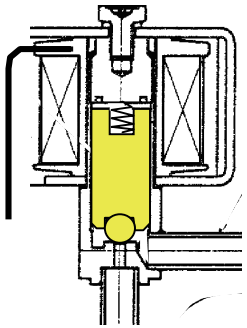

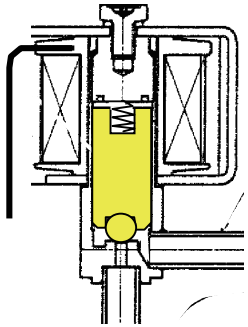

Pre-Study, Term and Construction

That's why main plunger chamber must be mounted on top for the installation.

P1 : Inlet pressure
P2 : Outlet pressure
P3 : Pressure above main plunger

When is main plunger lifted or dropped ?
Lifted when P1+P2 > P3+gravity of main plunger, then main port opened.
Dropped when P1+P2 < P3+gravity of main plunger, then main port closed.

Equalizing hole B
P3 is relieved to P2 through hole B when pilot port opened. (hole B>A)

Equalizing hole A
P3 is relieved to P1 through hole A when pilot port closed. (hole A<B)

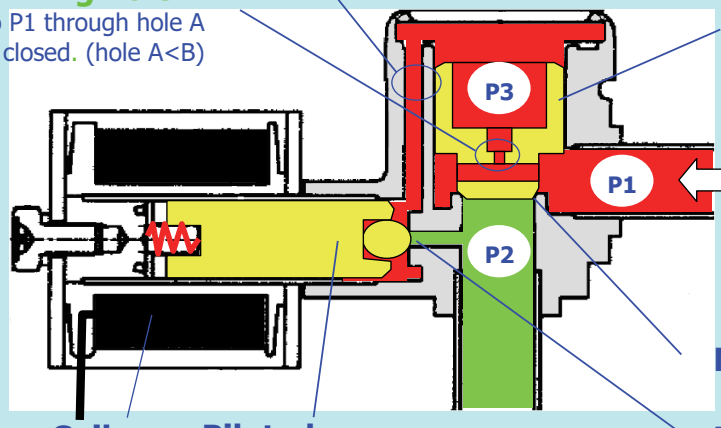

Main plunger (Now fallen)
This floating type plunger is lifted or dropped with small difference, 1 psi 0.07 kg/cm2, for full operation.

Main port (now closed)

Pilot port (now closed)

Coil
(Now de-energized)

Pilot plunger
(Now moved to close)

How is Pilot Type Valve opened or closed ?

A
Detail of A

Coil de-energized
Pilot port closed
Main port closed

P3=P1 , P3>P2

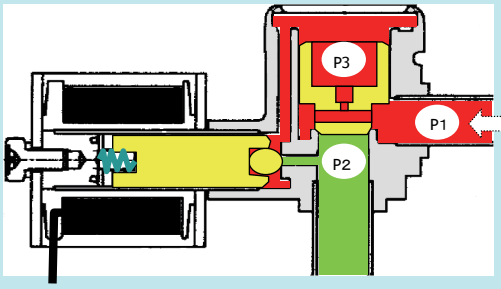

B
Detail of B

Coil energized
Pilot port opened
Main port opening

P3 is relieved to P2 (P3=P2), then P3<P1
(P1+P2>P3+main plunger)

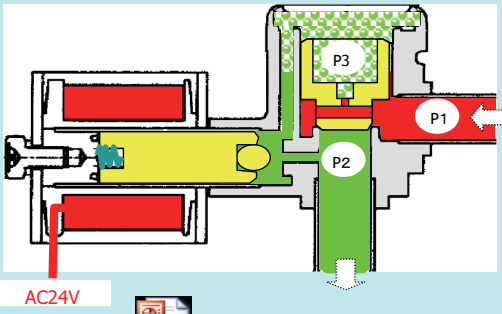

A → B
C → D

C
Detail of C

Coil energized
Pilot port opened
Main port opened

P3=P2 , P3<P1

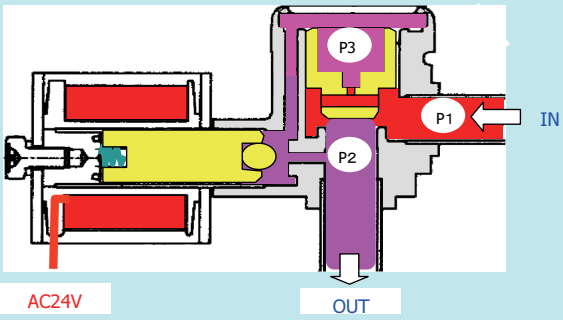

D
Detail of D

Coil de-energized
Pilot port closed
Main port closing

P3 is relieved to P1 (P3=P1), then P3>P2.
(P1+P2<P3+main plunger)

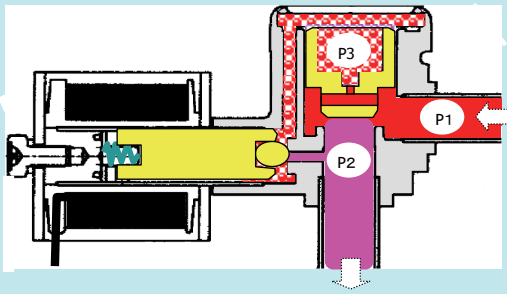

DAIKIN

TECHNICAL INFORMATION

DAIKIN INDUSTRIES LTD
AFTER SALES SERVICE DIV.

Subject	FUNCTION of WAKE UP BATTERY
Model	LXE10E100 or later, LXE10E-A, LXE10E-1, LXE10D, LXE10CA/10C

When no power supplied, Battery Mode Function can be performed by wake up battery, Dry battery 9V (Standard) or Rechargeable battery (Option).
To go to the function, press S key when no power is supplied.

Dry Battery
Alkaline type 9V
(Standard)

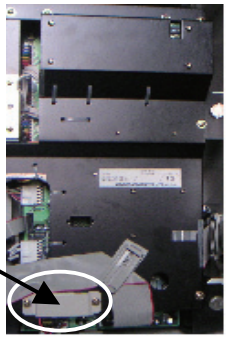

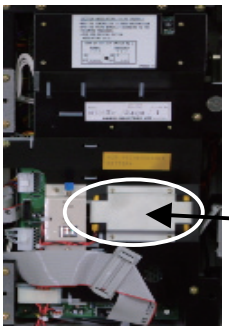

Rechargeable
Battery (Option)

FUNCTION of WAKE UP BATTERY when no power supplied		Dry Battery 9V (Standard)		Rechargeable Battery (Option)	
		LXE10E100 or later	LXE10E LXE10D	LXE10E100 or later	LXE10E LXE10D
BATTERY MODE FUNCTION (Press S key when no power supplied.)	Indication of * RS & SS * FA * USDA1,2,3 & CTS	Yes *1	Yes *1	Yes	Yes
	* LPT & HPT * Last succesful date of S & F-PTI * Residual voltage of wake up battery * Software version no.	Yes *1	No	Yes	No
	Setting change of * SP (Set Point) * Defrost interval * Control Humidity %	Yes *1	Yes *1	Yes	Yes
	* Data down loadding	Yes *1	Yes *1	Yes	Yes
Trip data logging after power OFF		No	No	Yes, for 120 hrs *3	Yes, for 72 hrs *3
USDA data logging after power OFF		Yes, for 120 hrs *2	Yes, for 72 hrs *2	Yes, for 120 hrs	Yes, for 72 hrs

Notes *1.Press S key, then if no indication comes up in the display, replace the battry to new one.
*2.Replace the battery to new one before every USDA shipment.
*3 Limmited models only

DAIKIN

TECHNICAL INFORMATION

DAIKIN INDUSTRIES LTD
AFTER SALES SERVICE DIV.

Subject	RECHARGEABLE BATTERY (Option)
Model	LXE10E100 or later, LXE10E-A, LXE10E-1

1. Rechargeable battery life

The rechargeable battery has a service life of about 2 years.
If the battery has been used for 2 years or longer, USDA data log or trip data log may not be available, even if LED is lit when the battery checked.

2. Residual voltage check

Rechargeable Battery

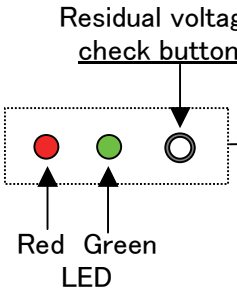

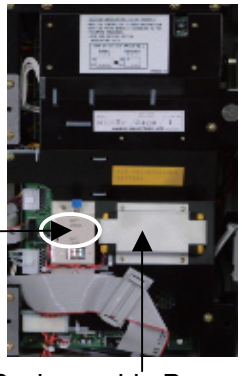

Rechargeable Battery

LXE10E100 or later

Check the residual voltage displayed in LCD by sensor indication mode.

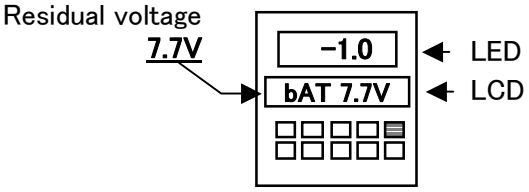

Above 7.6V : Full charge
Below 7.6V : Recheck after charging for 14 hrs.
Below 7.2V : Replace the battery
＊OV is displayed if under 5V.

LXE10E-A, LXE10E-1

Check the residual voltage with following steps by pressing the residual voltage check button.

1st check
Green : Full charge
Red or No light : Go to 2nd check after charging for 8 hrs.

2nd check
Green : Full charge
Red : Replace the battery
No light : Go to 3rd check after charging for another 8 hrs.

3rd check
Green : Full charge
Red or No light : Replace the battery

DAIKIN

TECHNICAL INFORMATION

DAIKIN INDUSTRIES LTD
AFTER SALES SERVICE DIV.

Subject	FUNCTION of LITHIUM BATTERY
Model	LXE10E100 or later

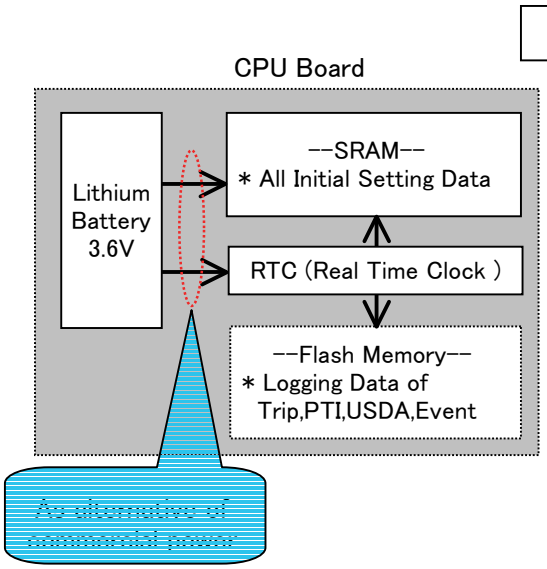

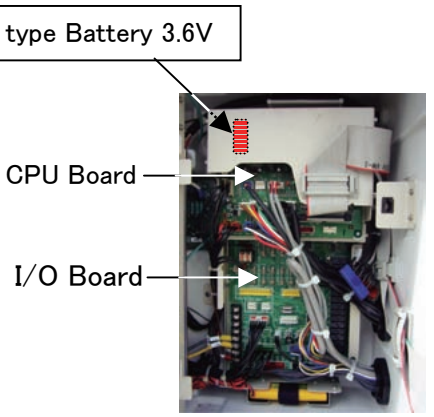

Controller DECOS3e

Function of Lithium Battery	Malfunction when the battery is flat	Measures
When no commercial power is supplied, the alternative power is supplied to SRAM and RTC in CPU board by lithium battery . * In SRAM, all Initial setting data and some other data are memorized. * RTC supplies clock signal to SRAM and flash memory.	1. All Initial setting data stored in SRAM are disappeared. However the data are transmitted and copied into SRAM from EEPROM in display board when the commercial power supplied later. 2. Some other data in SRAM such as running hours of compressor and fan mtors for manual check are disappeared. 3. It's re-counted from initial time '07/01/01 00:00 of RTC when the commercial power is supplied.	Replace CPU board or Controller Assy *Lithium battery is soldered on the CPU board.

When commercial power is supplied,
* the unit can be re-started with alarm E801(battery flat).
* All data in flash memory are logged from initial time '07/01/01 00:00 of RTC.

DAIKIN

TECHNICAL INFORMATION

DAIKIN INDUSTRIES LTD
AFTER SALES SERVICE DIV.

Subject	FUNCTION of LITHIUM BATTERY
Model	LXE10E-A, LXE10E-1, LXE10D, LXE10CA/10C

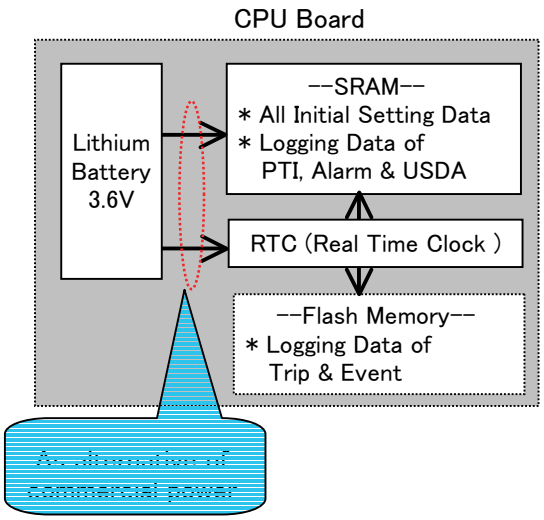

CONTROLLER INSIDE

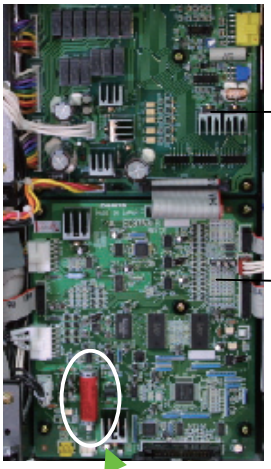

Function of Lithium Battery	Malfunction when the battery is flat	Measures
When no commercial power is supplied, the alternative power is supplied to SRAM and RTC in CPU board by lithium battery . * In SRAM, all Initial Setting Data and logging Data of PTI, Alarm & USDA are memorized.	All data in SRAM would be disappeared 1. All Initial Setting Data are disappeared, then unit can not be re-started when commercial power is supplied, as model name is not regognized. 2. Past logged Data in SRAM such as PTI, Alarm & USDA would be lost.	Replace CPU board or Controller Assy *Lithium battery is soldered on the CPU board.
* RTC supplies clock signal to SRAM and flash memory.	3. It's re-counted from initial time '01/01/01 00:00 of RTC when the commercial power is supplied. (Althogh unit can not be re-started) When commercial power is supplied, the unit can not be re-started.	

DAIKIN

SERVICE NEWS

番号:---

DAIKIN INDUSTRIES LTD
AFTER SALES SERVICE DIV.

Subjec	Pen drive gear in recorder damaged
Model	LXE10E100 or later, LXE10E-A, LXE10D, LXE10CA/C

Malfunction

- Inside pen drive plastic gear connected to the pen shaft was damaged by moving the pen with extreme finger force.

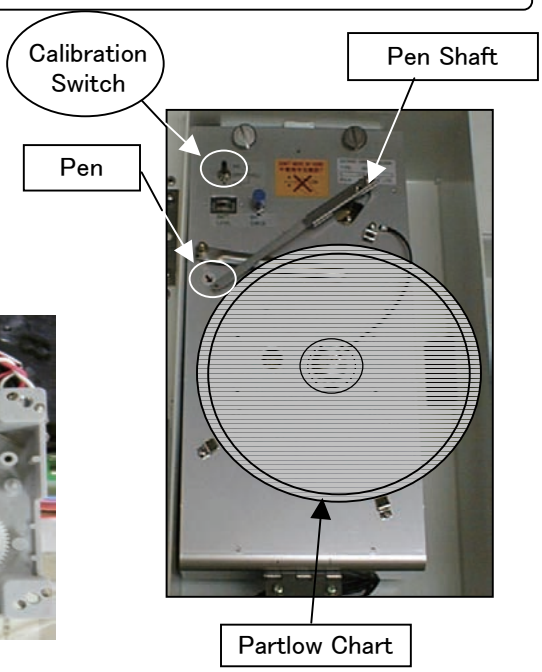

Pen drive plastic gear damaged

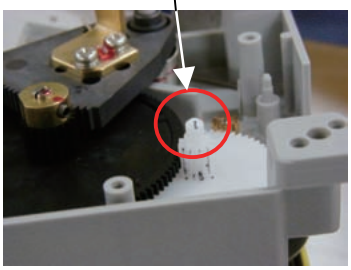

Pen bracket twisted

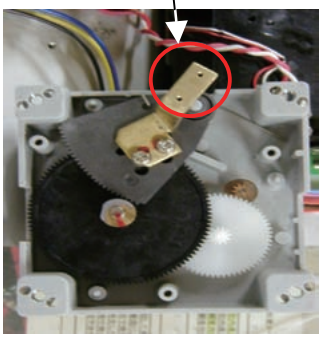

Causes

Somebody tried to adjust the pen position to meet the temperature shown on LED display.

Countermeasures ---Don't move the pen by extreme finger force.

① Wait until the temperature reaches to Set Point and passes another 30 minute. Because the recording temp. shown on partlow chart and LED display are not same during pull-down operation.
---See the reason below.

②Then adjust the pen position to meet the temperature shown on LED display using "calibration switch".
The calibration switch is adjustable ±0.7℃.

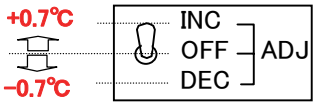

--- Recorder characteristics ---

The recorder has a characteristics which the integrated and averaged temp. every 7.5 minute is shown on the partlow chart.

The result makes difference between partlow chart and LED in the display especially during pull-down operation.

So the adjustment of the pen position is requested at least 30 minute later after reaching to SP.

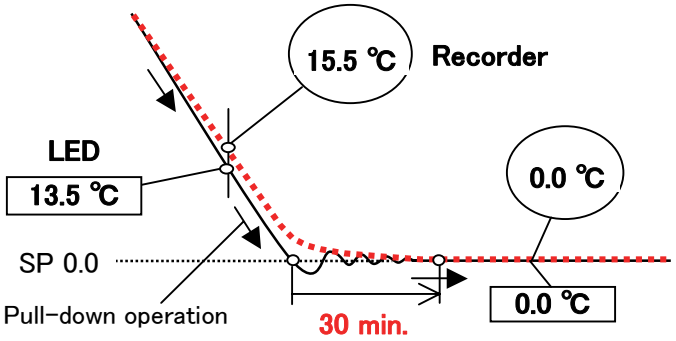

DAIKIN

TECHNICAL INFORMATION

DAIKIN INDUSTRIES LTD
AFTER SALES SERVICE

Subject	FILTER & STRAINER
Model	LXE10E100 or later, LXE10E-A, LXE10E-1

- Filter or Strainer is installed at inlet of each valve.
- Also check filter or strainer when the valve clog is diagnosed.

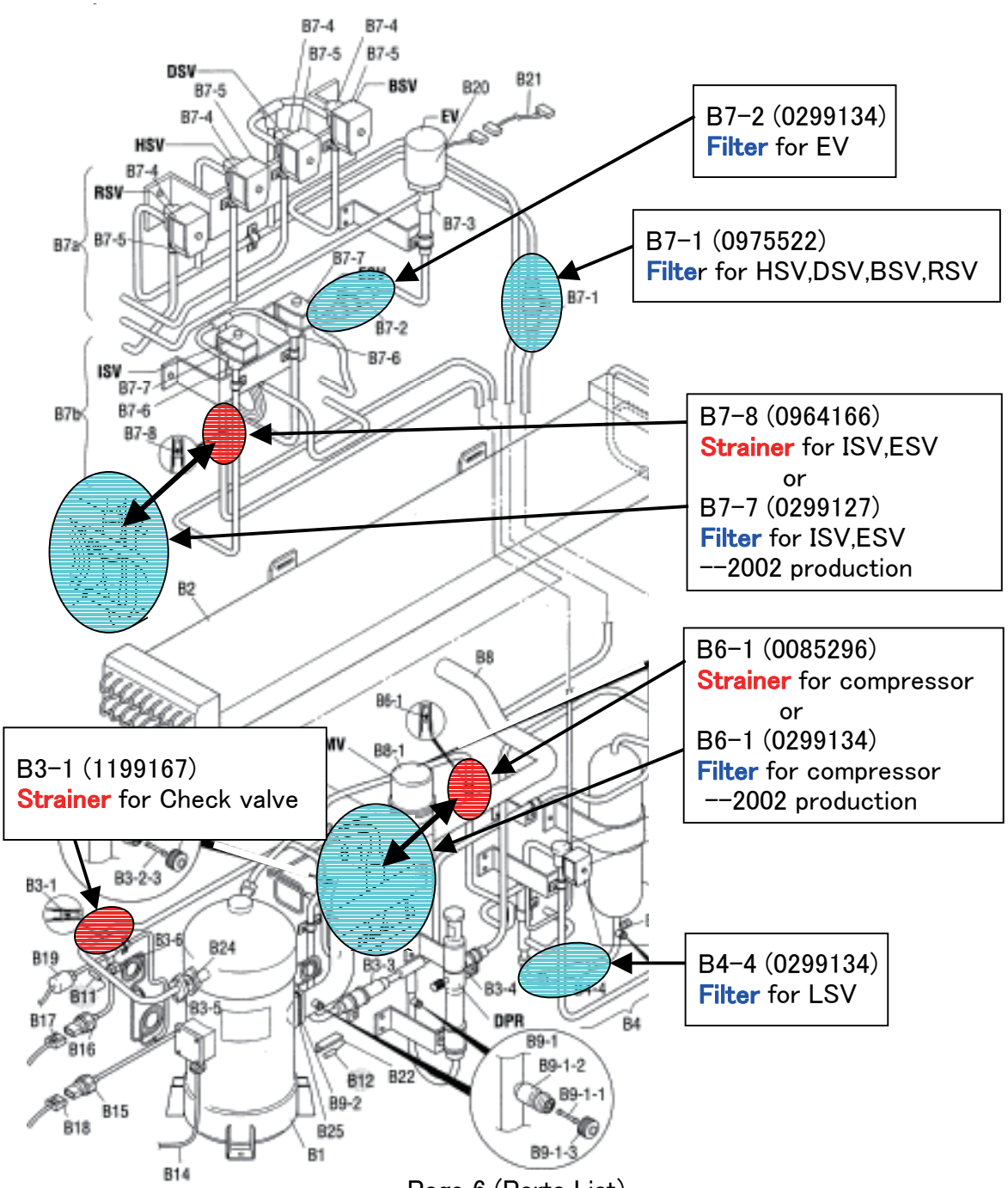

--Page 6 (Parts List)--

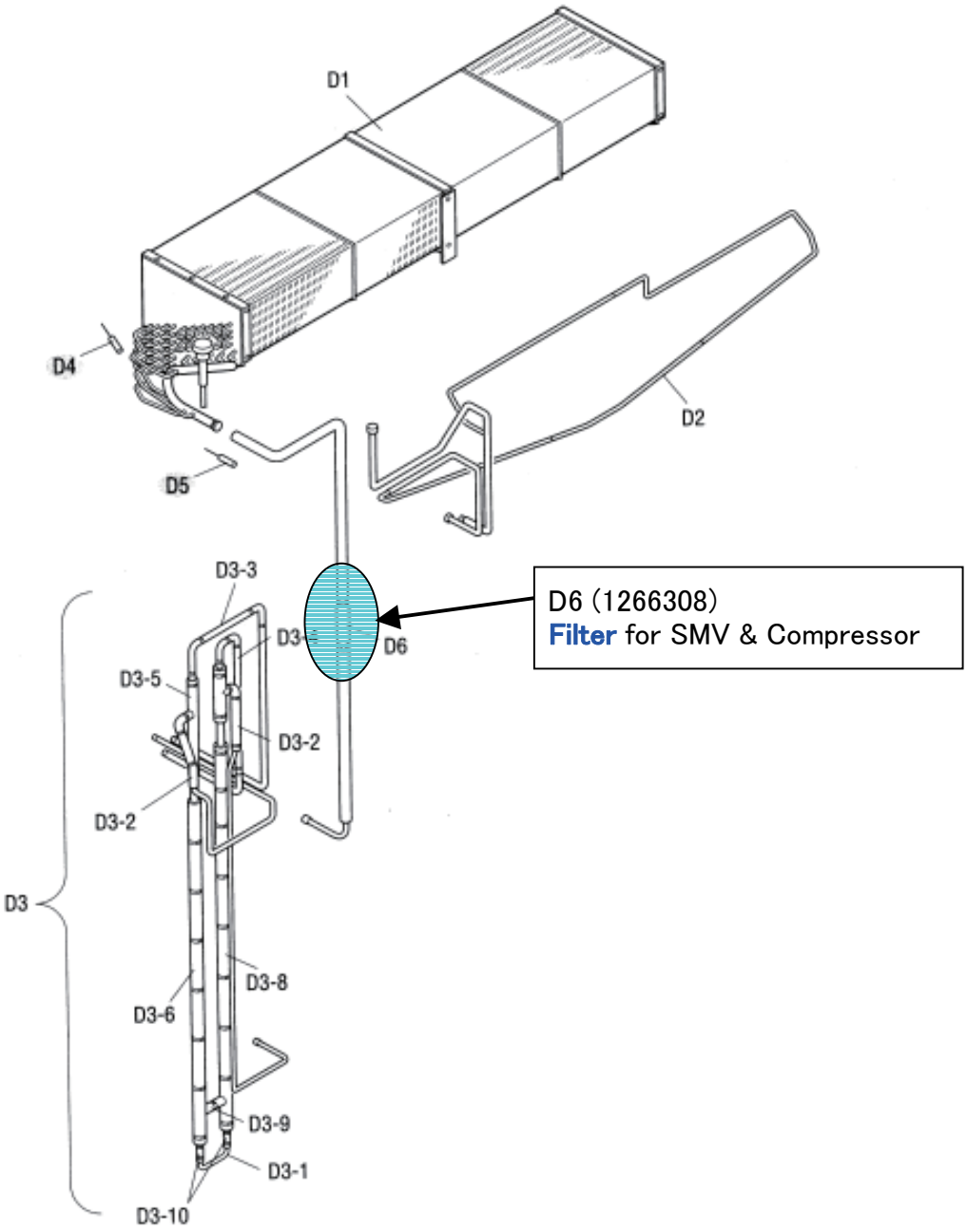

--Page 12 (Parts List)--

DAIKIN

TECHNICAL INFORMATION

DAIKIN INDUSTRIES LTD
AFTER SALES SERVICE DIV.

Subject	Principle of Phase Correction Contactor, PCC1,PCC2
Model	LXE10E100 or later, LXE10E-A, LXE10E-1, LXE10D,

● Priceple

Controller judges positive phase power or reverse phase power and energizes PCC1 or PCC2 accordingly.
PCC1 & PCC2 are placed on primary circuit of magnetic contactors for scroll compressor and fan motors, which are not allowed to rotate reversely.

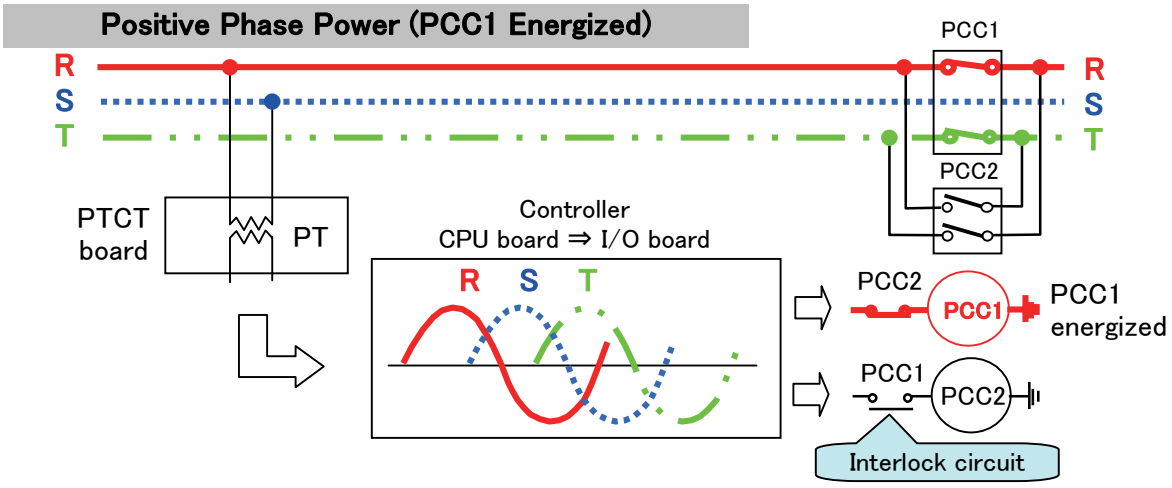

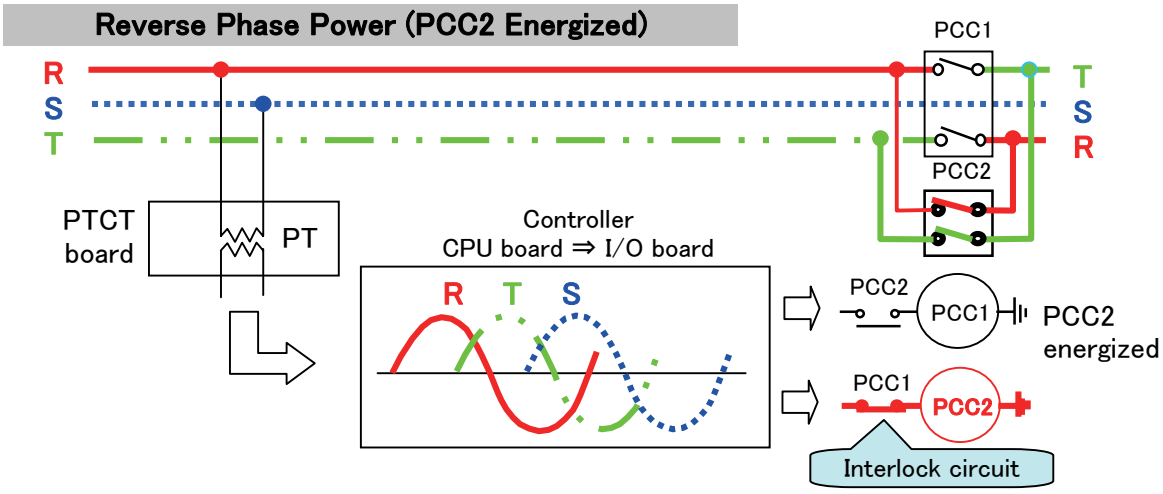

● Electrical & mechanical interlock for PCC1 & PCC2

To prevent unexpected glitch, PCC1 & PCC2 have to be electrically connected with interlock circuit.
Furthermore mechanical lock is internally equipped.

● Therefore PCC1 & PCC2 are assembled as one part.
The kit number for spare parts order is
1241493 for LXE10E
0444338 for LXE10D.

PCC1 & PCC2 Kit

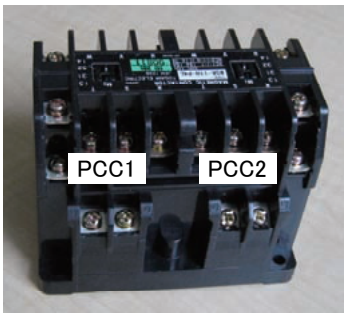

DAIKIN

TECHNCAL INFORMATION

番号:---
DAIKIN INDUSTRIES LTD
AFTER SALES SERVICE DIV.

Subject	Modulation Valve
Model	LXE10D, LXE10CA,10C

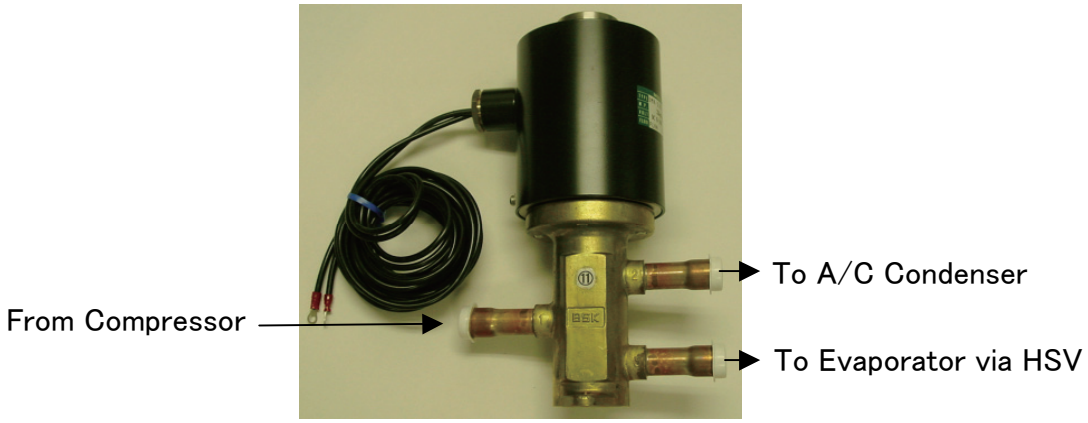

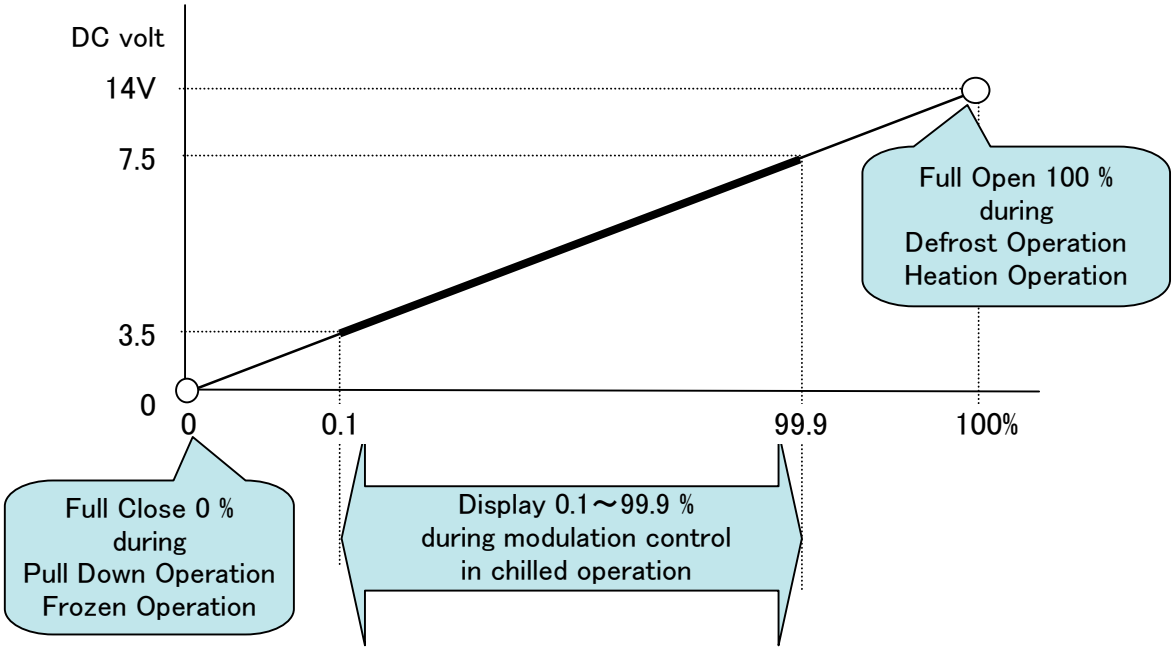

TROUBLESHOOTING 7

DAIKIN

TECHNICAL INFORMATION

DAIKIN INDUSTRIES LTD
AFTER SALES SERVICE

Subject	COMPRESSOR REPLACEMENT 1/5
Model	LXE10E100 or later, LXE10E-A, LXE10E-1

[1] PREPERATION OF SPARE PARTS, COMPRESSOR

Points

1. Spare parts, Compressor has the oil plug and the oil level gauge on the body.
2. Stick the auxiliary cable connection label onto the label sticked on the compressor body. (This is only for LXE10E-1)

[2] REMOVAL OF COMPRESSOR

Points

1. Recover refrigerant from port ④ & ⑤.
   -- Refer to "How to use 5 service ports".
2. Close the discharge/suction side stop valves. (This is only for LXE10E-1)
3. Disconnect the cables and mounting bolts first and the pipings later.
4. Use double wrenches when the flare nuts for small pipes are loosened.

[3] INSTALLATION OF COMPRESSOR

Points

1. Connect the pipings first and fix cables and mounting bolts later.
2. Don't misstake the connection of power cables.
   The compressor can not be rotated in reverse.
3. Check whether the discharge/suction side stop valves are opened.
   (This is only for LXE10E-1)
4. Vacuum & Dehydrate and charge refrigerant from port ⑤ & ③.
   ---- Refer "How to use 5 service ports".

[4] REMOVAL OF EXCESS REFRIGERANT OIL

Points

1. Remove excess refrigerant oil using S-PTI operation after installing the compressor.

[1] PREPERATION OF SPARE PARTS, COMPRESSOR

[Model JT224D-NYR]
* Precharged refrigerant oil DEPHNE FVC46D * 2.2L
* Precharged non-moistured nytrogen gas

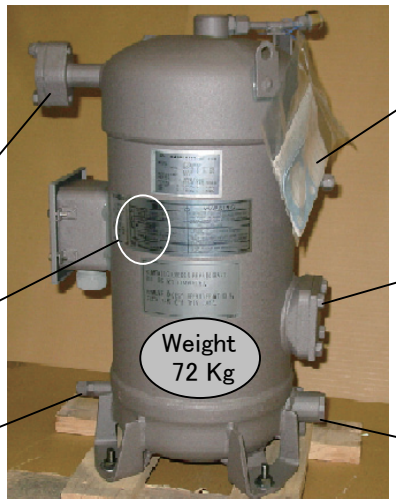

Blind flange ,Discharge

Cable connection label (See Note 1)

Oil plug

Auxiliary parts packed in plastic bag

Blind flange ,Suction

Oil level gauge

[Auxiliary parts]

Instruction cards	Gasket ,Suction	Gasket ,Discharge	Insulation tape for discharge flange	Insulation tape for suction flange	Cable connection label for LXE10E-1
2 pcs	1 pcs	1 pcs	1 pcs	1 pcs	1 pcs

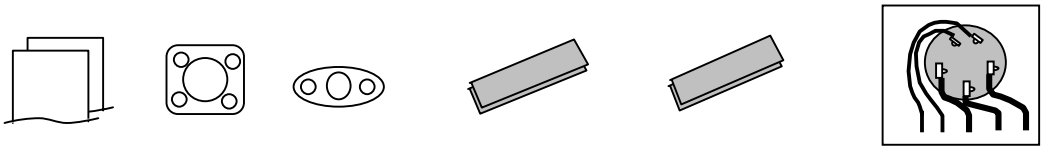

(See Note 1)

Note 1. Stick the auxiliary cable connection label onto the label sticked on the compressor body. This is only for LXE10E-1.

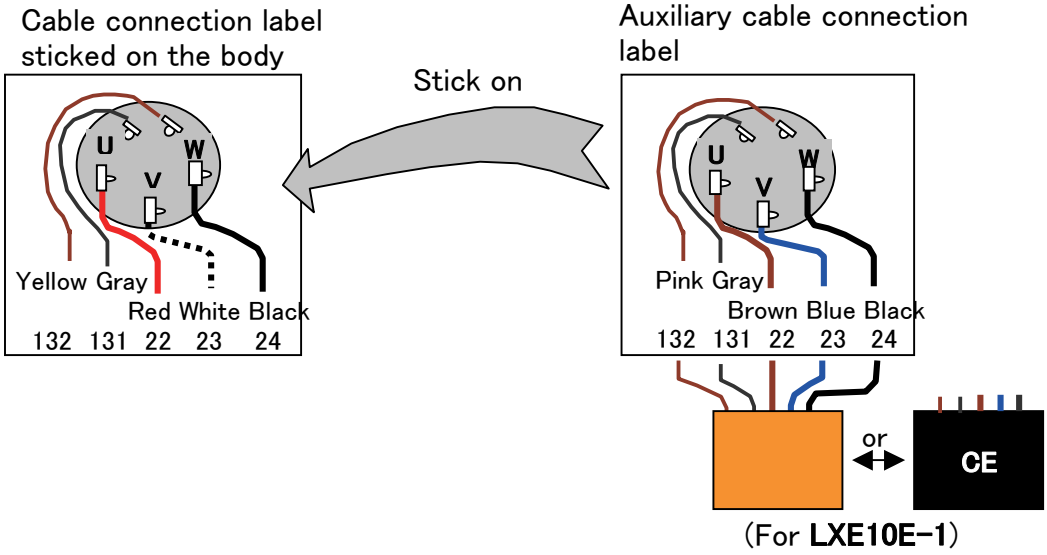

(For **LXE10E-1**)

[2] REMOVAL OF COMPRESSOR

Recover refrigerant

1. Recover the refrigerant from service port ④ on discharge lineand ⑤.
   ---- Refer "How to use 5 service ports".
2. Close the discharge and suction side stop valves on the compressor.

Disconnect cables and mounting bolts first

3. Switch off the power.
4. Open the terminal box cover and disconnect the cables.
5. Remove the mounting bolts.

Disconnect pipings later.

6. Remove the flare nuts for the injection piping on the compressor head and gauge piping on the body.

Attention !
Use double wrenches when the flare nuts are loosened.

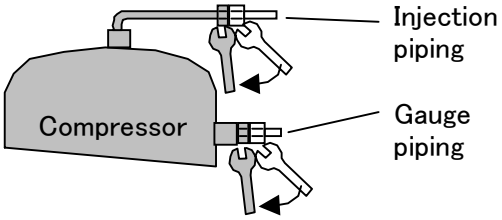

7. Remove the insulation tape fixed on suction flange and discharge flange.
8. Remove the bolts for suction and discharge flange.

[3] INSTALLATION OF COMPRESSOR

Connect pipings first.

1. Before connecting pipings, insert and screw in the mounting bolts slightly.
2. Tighten the flare nuts for the injection piping and gauge piping on the body.

Attention !
Use double wrenches when the flare nuts are tightened.

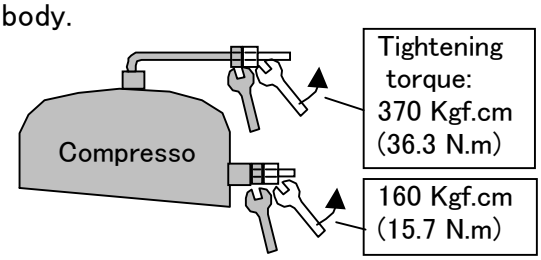

Fix mounting bolts later.

3. Fix the suction and discharge flanges using with the auxiliary gaskets and the bolts.
4. Tighten the mounting bolts.

Tightening torque
257 Kgf.cm (25.2 N.m)

435 Kgf.cm (42.7 N.m)

Connect cables

5. Check that the auxiliary cable connection label for LXE10E-1 is sticked onto the label for others on compressor body.

6. Connect the cables to the terminals.

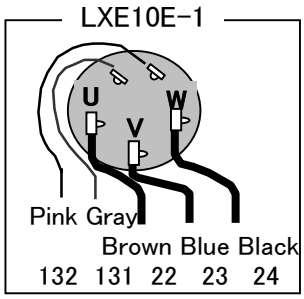

Attention ! Pay the attention to the cable connection. Incorrect wiring may run the compressor in wrong direction and may cause burn out.

Charge refrigerant

7. Open the discharge and suction side stop valves.
8. Vacuum and dehyadrate from service port ④ and ⑤.
9. Then charge the refrigerant from service port ⑤ and ③.
   ---- Refer "How to use 5 service ports".
10. Check gas leakage especially at sunction/discharge flanges and flare nuts for injection piping/gauge piping.

11. Fix the auxiliary insulation tape and fix it using clamp band to the sunction/ discharge flanges.

12. Seal with silicon sealant around the flare nut for gauge piping.

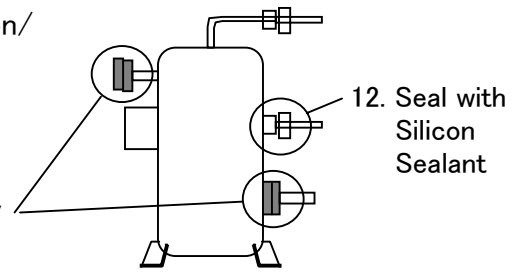

[4] REMOVAL OF EXCESS REFRIGERANT OIL AFTER COMPRESSOR REPLACEMENT

Preperation

1. First check again whether the discharge/suction side stop valves are opened.
   Also check whether the cable connection at terminal is correct.
2. Connect gauge manifold hoses to the service ports on discharge /suction side stop valves.
3. Opeate the unit for about 5 minutes and stop it.

Return oil to the compressor

4. Operate the S-PTI (Short PTI) and stop at step of "P10".

   (1) Set the ON/OFF switch to ON
   (2) Go to PTI mode by pressing "Select" key immdiately for 3 seconds after all LED lighting OFF.
   (3) Sellect S-PTI using "△ or ▽" key and press "Enter" key ,and S-PTI starts.
   (4) Stop the unit with ON/OFF switch when P10 is displayed on the LED.

<Function of step P06 & P08 before P10>

*P06 (HPS check)	*P08 (Pump down check)
When the high pressure rises, the circuration rate of refrigerant increaces and the oil is expected to return to the compresor.	The refrigerant contained in the compressor oil is evaporated and seperated from the oil.

5. If the oil level can been seen in the oil level gauge, conduct the step 4 (Operate S-PTI and stop at P10.) for oil returning again.

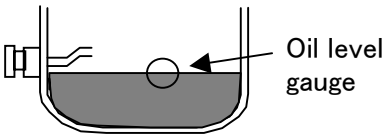

Remove excess oil

6. Bypass the gas from high pressure side to low pressure side of gauge manifold and adjust the low pressure to 0 kPa or more.

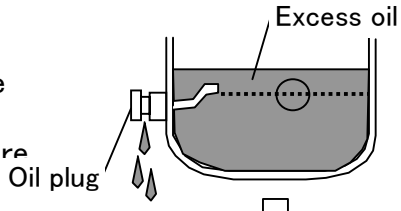

7. Loosen the oil plug and remove the excess oil.

8. Close the oil plug when no more oil comes out.

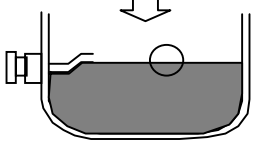

9. Take off "Remove excess oil" lavel sticked on compressor body.

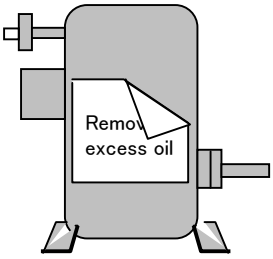

Subject	Controller replacement with spare DECOSIIIe
Model	DECOSIIIe (LXE10E100～) DECOSIIId (LXE10E-1, LXE10E-A) DECOSIIIc (LXE10E-A) DECOSIIIb (LXE10D)

Spare controller DECOSIIIe is convertible for all controllers DECOSIIIe, IIId, IIIc and IIIb.

Here it explains controller replacement with spare DECOSIIIe with following contents.

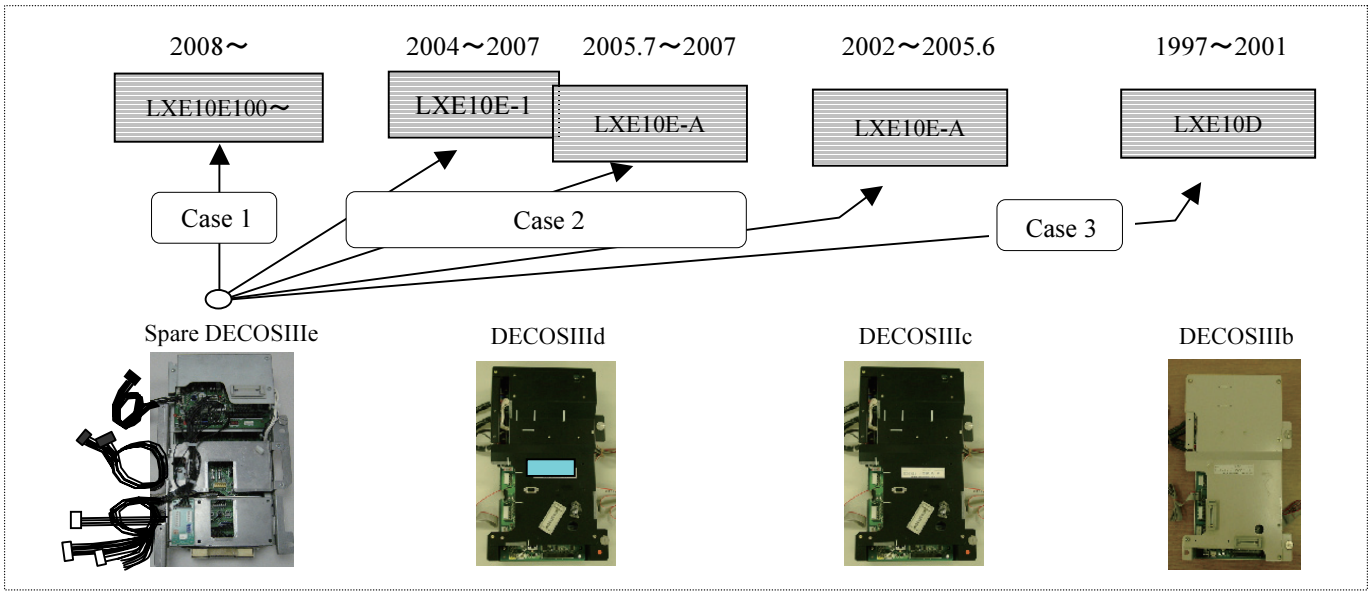

CONTENTS

		Case 1	Case 2	Case 3
1. Spare controller DECOSIIIe	------	Page 2	Page 2	Page 2
2. Controller Replacement with spare DECOSIIIe	------	3,4	5,6	7,8
●Modification of spare DECOSIIIe before replacing DECOSIIIe,IIId,IIIc or IIIb ●Replacement of DECOSIIIe,IIId,IIIc or IIIb with spare DECOSIIIe				
3. Initial setting to spare DECOSIIIe	------	9,10	9	9
4. Up-loading software to spare DECOSIIIe	------	11	11	11
5. Operation	------	11	11	11

Subject	1. Spare controller DECOSIIIe
Model	DECOSIIIe (LXE10E100) DECOSIIId (LXE10E-1, LXE10E-A) DECOSIIIc (LXE10E-A) DECOSIIIb (LXE10D)

Spare controller DECOSIIIe is shown below.

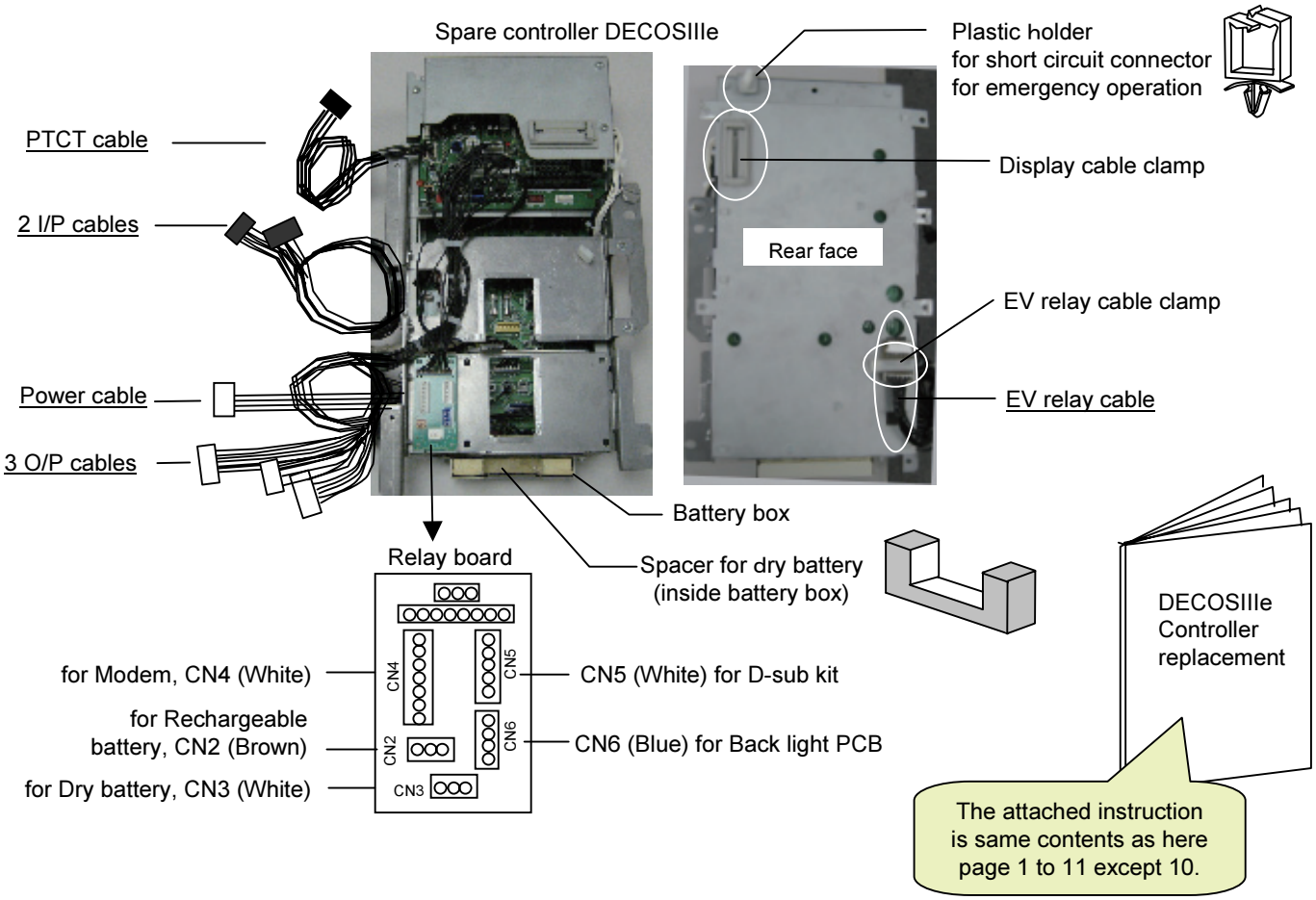

Some of spare controller DECOSIIIe attach following accessory parts.

D-sub kit

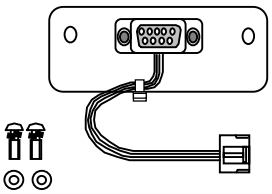

D-sub kit is used for
For MOL
LXE10E-A12C (DECOSIIId)
LXE10E-A6,A12,A12A,12B (DECOSIIIc)
all LXE10D (DECOSIIIb)
For WHL, LXE10E-A17 (DECOSIIId)

Battery cover kit

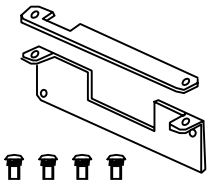

Battery cover kit is used for
LXE10E135A (DECOSIIIe) for WHL
LXE10E-A35B (DECOSIIId) for WHL.

MV board kit

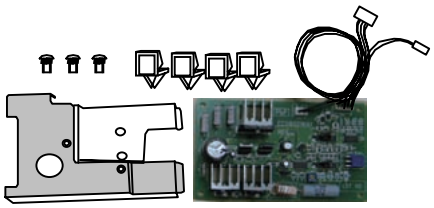

MV board kit is used for
LXE10D (DECOSIIIb) for all.

● Modification of spare DECOSIIIe before replacing DECOSIIIe

[1] Remove parts ① to ⑥ and cables ⑦ to ⑩ from spare controller DECOSIIIe.

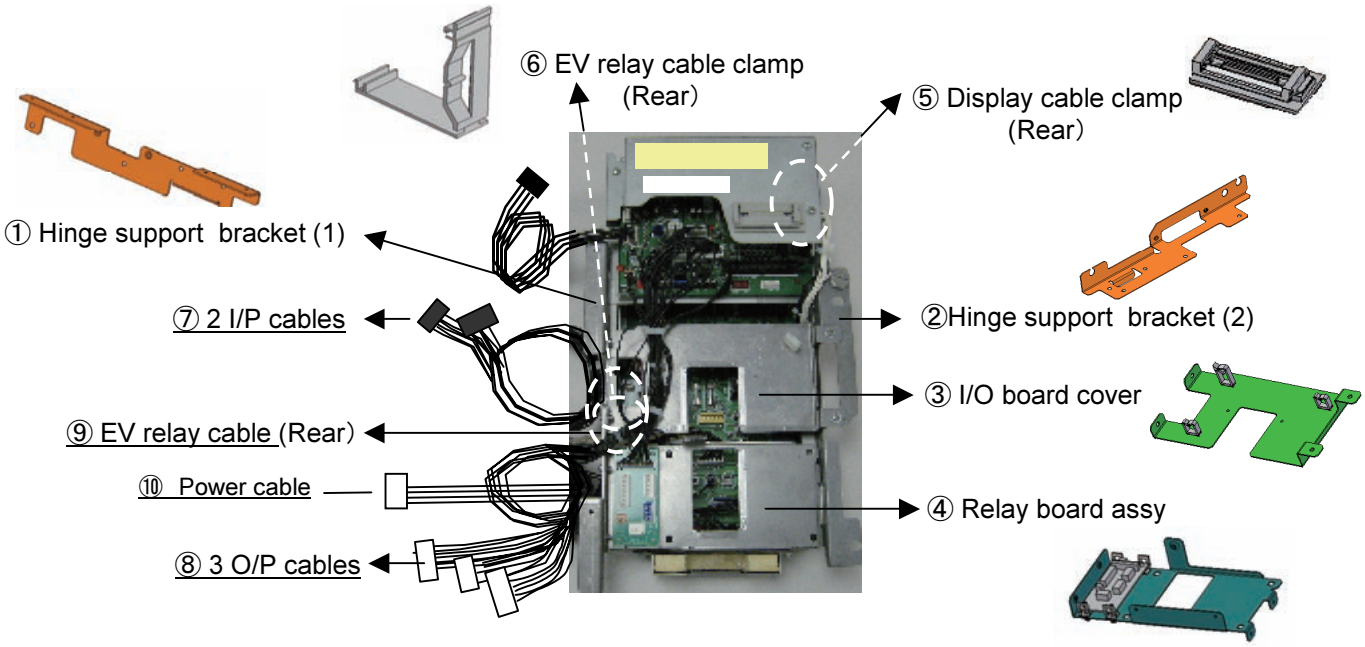

[2] Then move CPU board kit 20mm by loosening 2 screws both sides and fix it again using next female screw. (Refer View **A** below)

[3] Replace plastic holder from rear to front right. (Refer View **A** below)

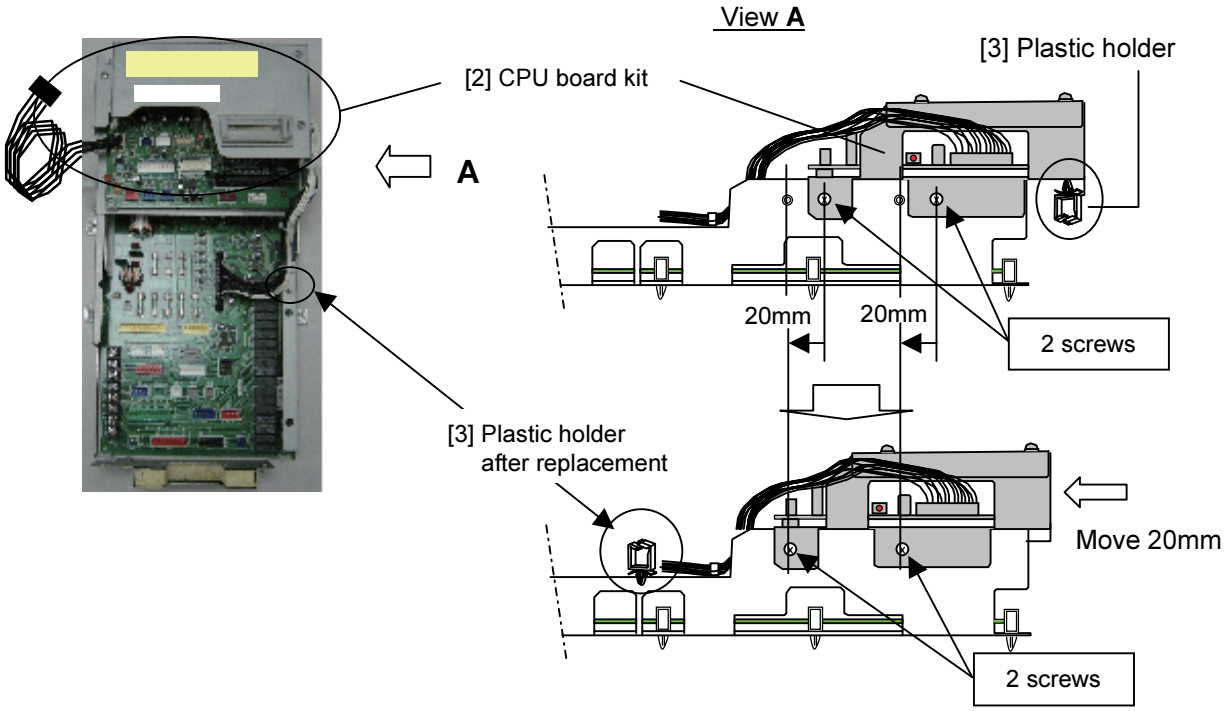

Subject	2. Controller Replacement with spare DECOSIIIe
Model	DECOSIIIe (LXE10E100or later) 2/2

[4] Re-install rechargeable battery or dry battery and short circuit connector taken from failure controller.
[5] Install battery cover kit if it is attached to spare controller.

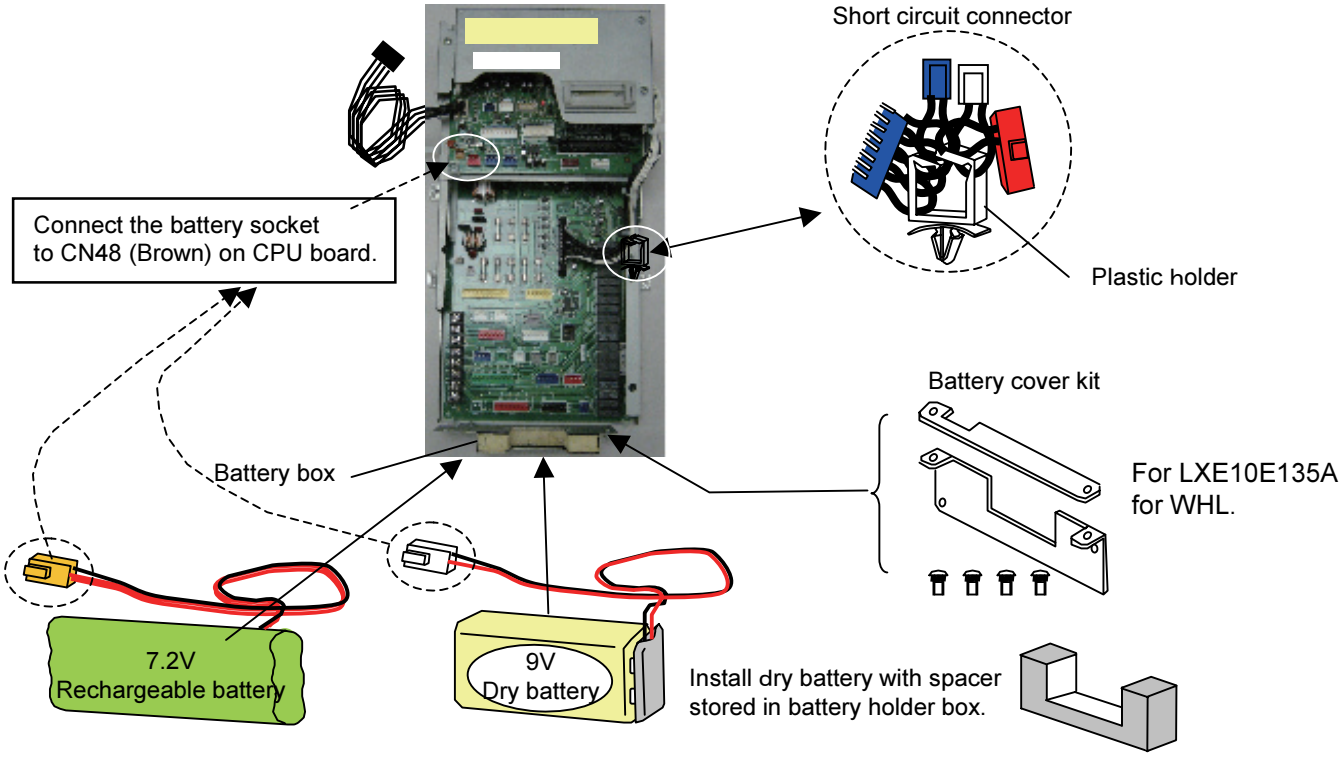

● . Replacement of DECOSIIIe with spare DECOSIIIe

After replacement with spare controller, connect all cables to CPU board and I/O board as it was before.

After connecting all cables, clamp cables using cable ties shown on right picture.

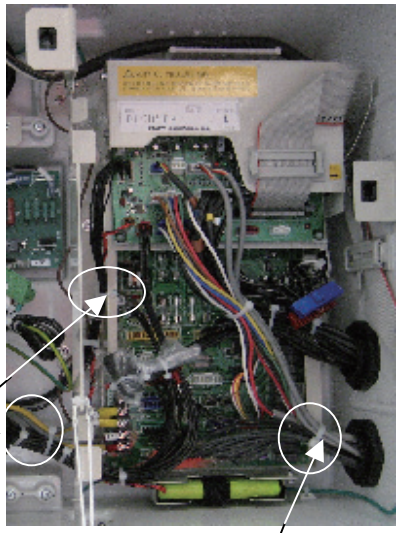

Subject	2. Controller replacement with spare DECOSIIIe
Model	DECOSIIId (LXE10E-1, LXE10E-A), DECOSIIIc (LXE10E-A) 1/2

● Modification of spare DECOSIIIe before replacing DECOSIIId or IIIc

[1] Re-install following parts taken from failure controller.
1) Speed bolt and washer (2 or 1 set depending on unit)
2) Rechargeable battery or dry battery
3) Short circuit connectors

[2] Install following accessory parts if it is attached to spare controller.
1) D-sub kit
2) Battery cover kit

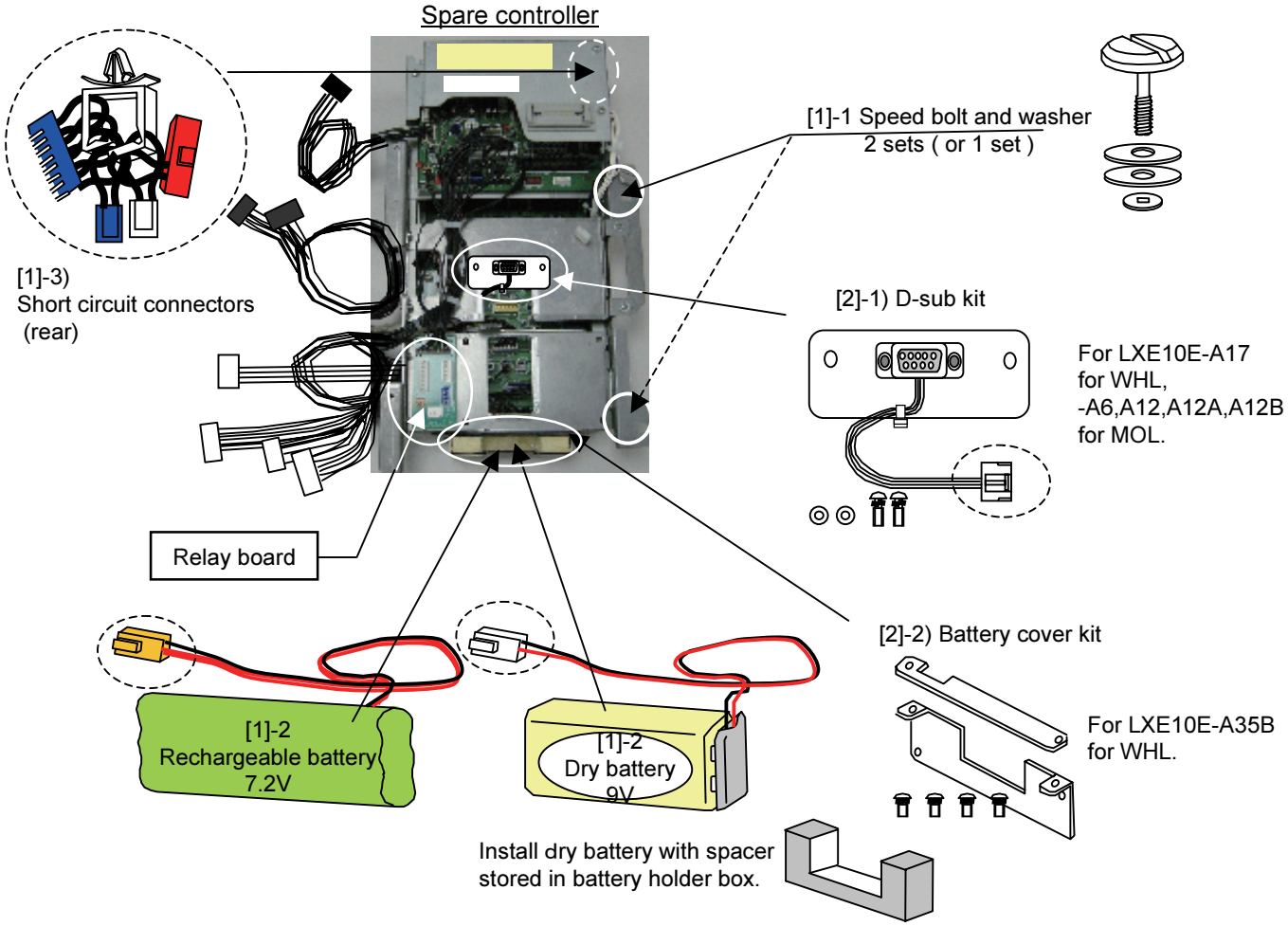

Connection to relay board

CN2 (Brown) for Rechargeable Battery
CN3 (White) for Dry Battery
CN5 (White) for D-sub kit

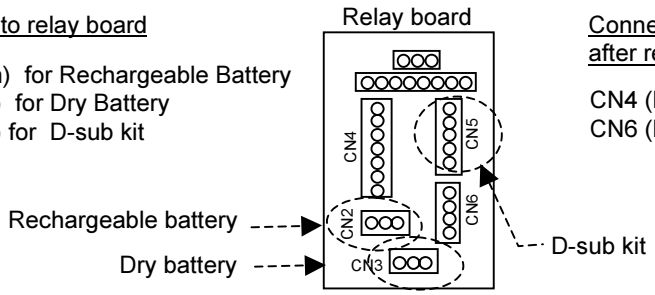

Connection to relay board
after replacing controller

CN4 (Brown) for Modem
CN6 (Blue) for back light (for YML & Hanjin)

Subject	2. Controller Replacement with spare DECOSIIIe
Model	DECOSIIId (LXE10E-1, LXE10E-A), DECOSIIIc (LXE10E-A) 2/2

● . Replacement of DECOSIIId or IIIc with spare DECOSIIIe

[1] Fix spare DECOSIIIe using 2 hinges (or 1 hinge depending on unit) left side.

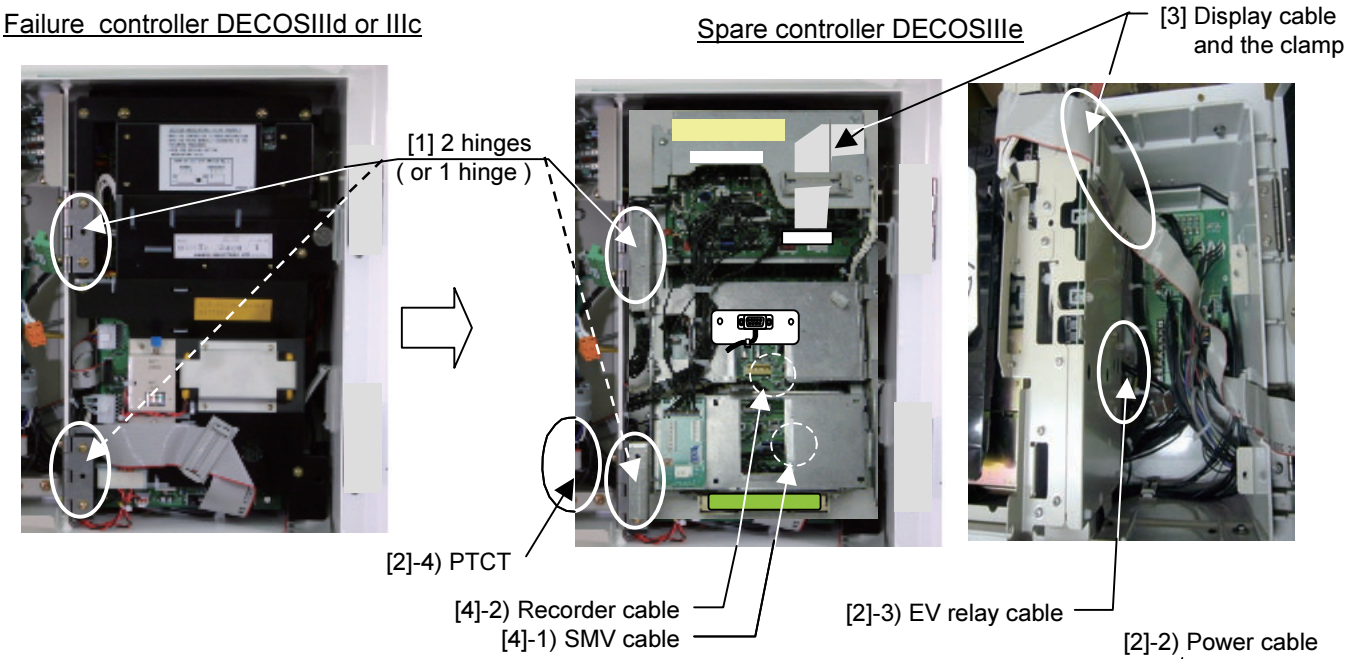

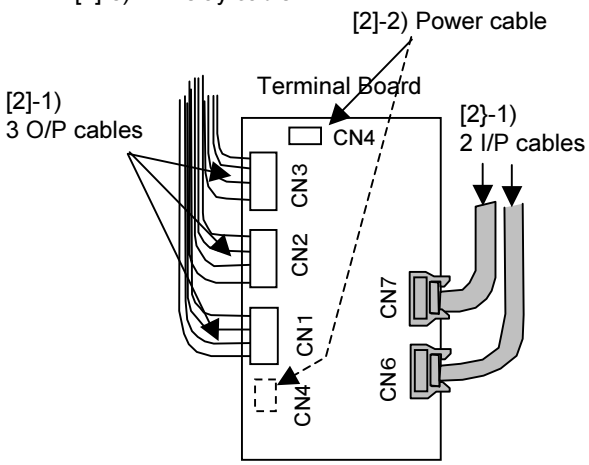

[2] Connect following cables connected from controller.
1) 3 O/P cables and 2 I/P cables to terminal board.
2) Power cable to CN4 (white) on terminal board
3) EV cable to socket at end of EV relay cable.
4) PTCT cable to CN2 (black nail) on PTCT board

[3] Connect display cable to CN41 (white) on CPU board.
Then lay and clamp the cable on rear face and upper right front of controller.

[4] Connect following cables
1) SMV cable to CN9 (blue) on I/O board
2) Recorder cable (option) to CN3 (yellow) on I/O board

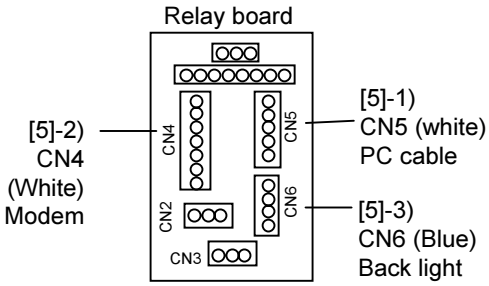

[5] Connect following cables to relay board
1) PC cable from CN30 (white) on terminal board to CN5 (white) on relay board.
2) MODEM cable to CN4 (blown) on relay board.
3) Back light cable (option) to CN6 (blue) on relay board.
* Back light cable is applied only for LXE10E-A18,A30 for YML and –A33 for Hanjin.

Subject	2. Controller Replacement with spare DECOSIIIe
Model	DECOSIIIb (LXE10D) 1/2

● Modification of spare DECOSIIIe before replacing DECOSIIIb

[1] Install MV board kit attached to spare controller.
[2] Then connect 2 cables from the MV board kit to CN49 (wine red) on CPU board and CN5 (light brown) on I/O board.
[3] Re-install following parts taken from failure controller.
1) Speed bolt and washer (2 sets)
2) Dry battery
3) Short circuit connectors
[4] Install following accessory parts if it is attached to spare controller.
1) D-sub kit

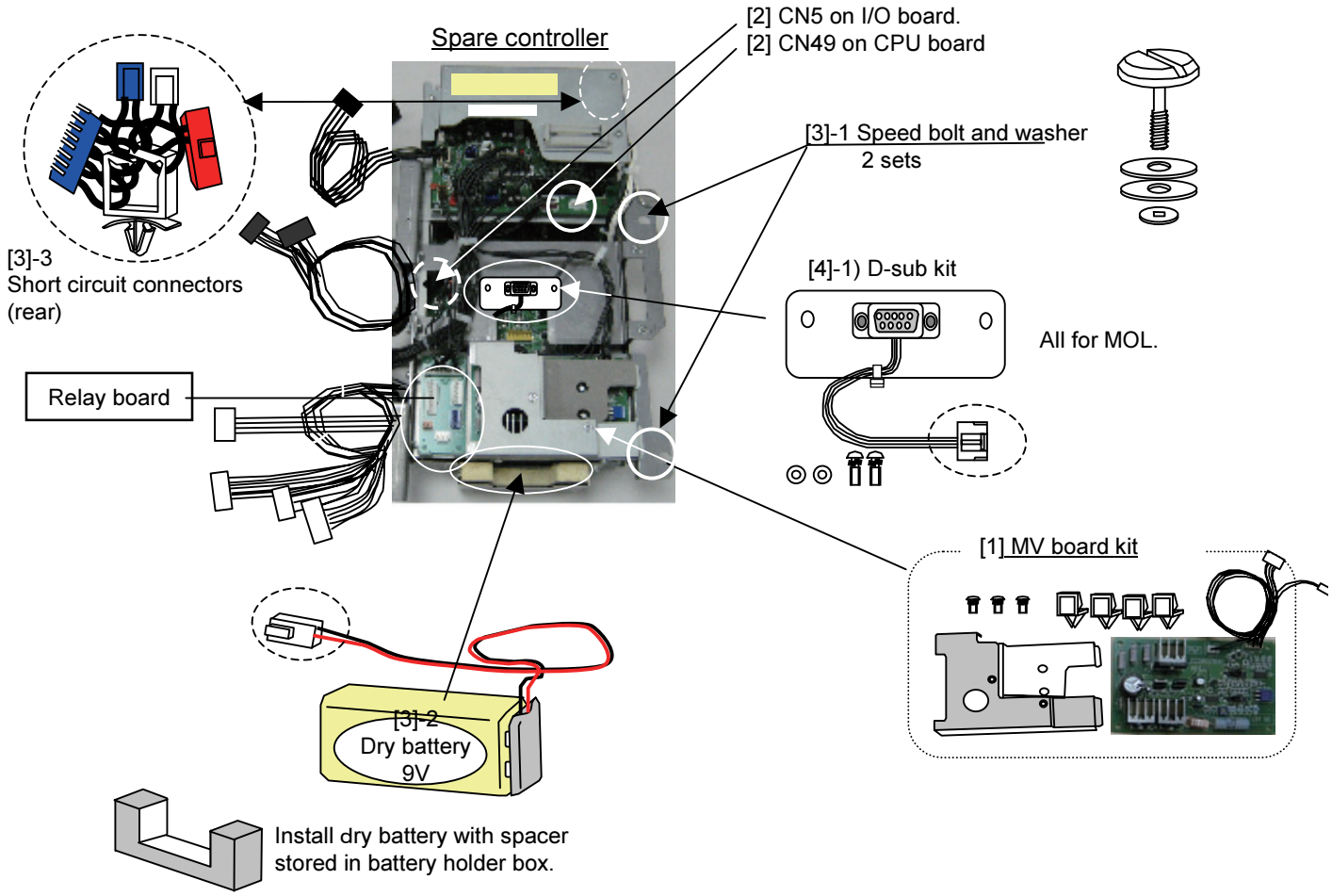

Connection to relay board

CN2 (Brown) for Rechargeable Battery
CN3 (White) for Dry Battery
CN5 (White) for D-sub kit

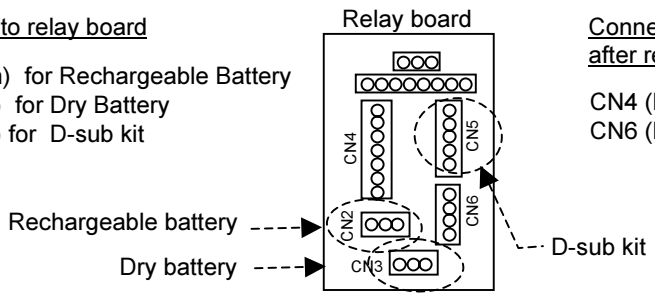

Connection to relay board after replacing controller

CN4 (Brown) for Modem
CN6 (Blue) for back light (for YML)

Subject	2. Controller Replacement with spare DECOSIIIe
Model	DECOSIIIb (LXE10D) 2/2

● . Replacement of DECOSIIIb with spare DECOSIIIe

[1] Fix spare DECOSIIIe using 2 hinges left side.

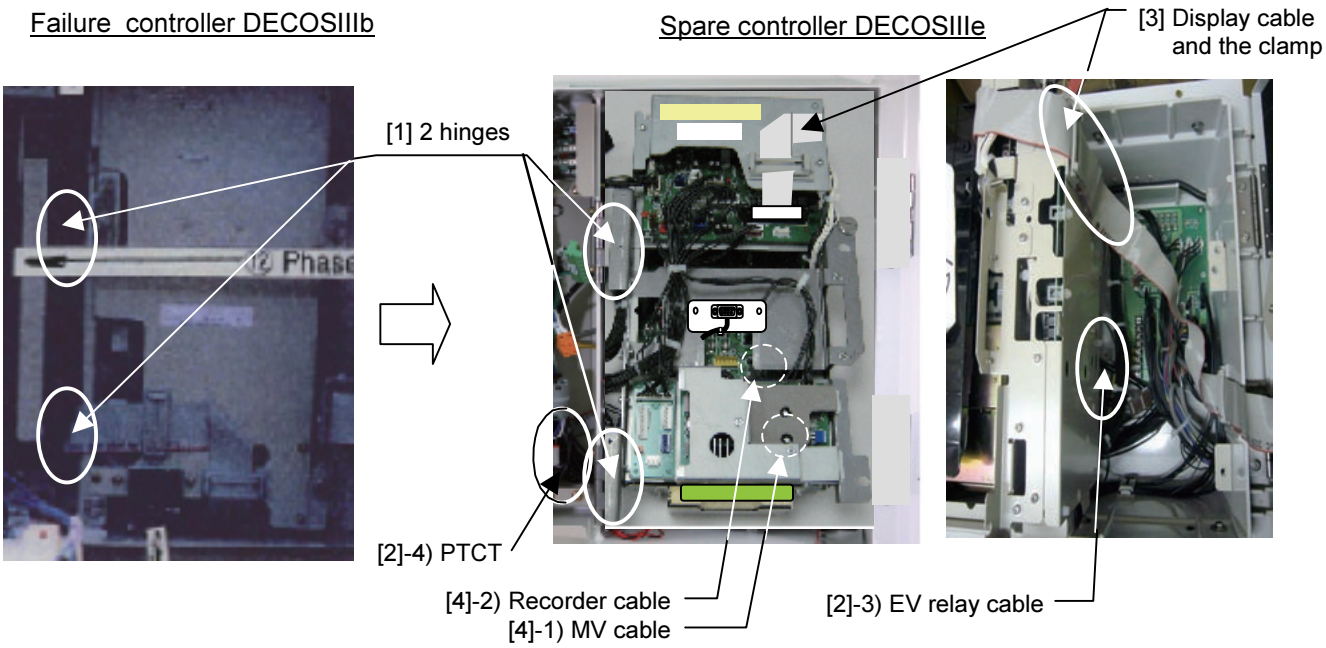

[2] Connect following cables connected from controller.
1) 3 O/P cables and 2 I/P cables to terminal board.
2) Power cable to CN4 (white) on terminal board
3) EV cable to socket at end of EV relay cable.
4) PTCT cable to CN2 (black nail) on PTCT board

[3] Connect display cable to CN41 (white) on CPU board.
Then lay and clamp the cable on rear face and upper right front of controller.

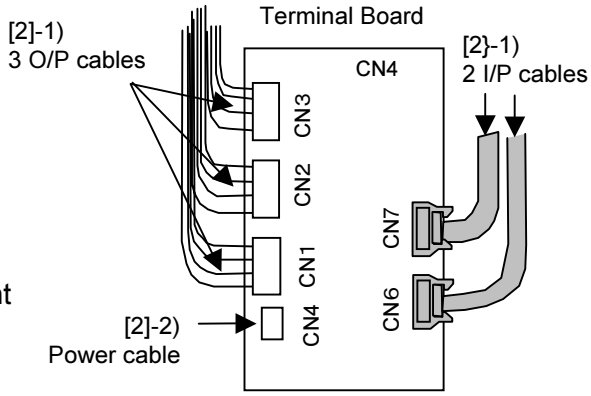

[4] Connect following cables
1) MV cable to CN25 (blue) on MV board kit
2) Recorder cable (option) to CN3 (yellow) on I/O board

[5] Connect following cables to relay board
1) PC cable to CN5 (white) on relay board.
2) MODEM cable to CN4 (blown) on relay board.
3) Back light cable (option) to CN6 (blue) on relay board.
* Back light cable is applied only for LXE10E-A13 for YML

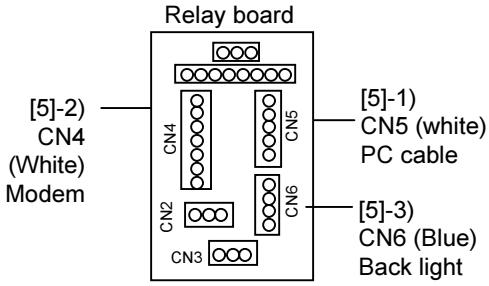

Subject	3. Initial setting to spare controller DECOSIIIe
Model	DECOSIIIe (LXE10E100~) / DECOSIIId (LXE10E-1, LXE10E-A) / DECOSIIIc (LXE10E-A) / DECOSIIIb (LXE10D)

3. Initial setting

Do initial setting by following notices after replacing controller,

Notes 1. Confirm model name first.
The model name is printed in the name plate mounted on the wall behind power cable box.

2. In the case of LXE10E100～(DECOSIIIe), initial setting work is not required after replacing controller.
(Reason) The initial setting data before the controller failed has been already stored in display board. Then the stored data is transmitted to CPU board when power ON after replacement.

3 . Initial setting work is required for the controller replaced to LXE10E-1, LXE10E-A and LXE10D.

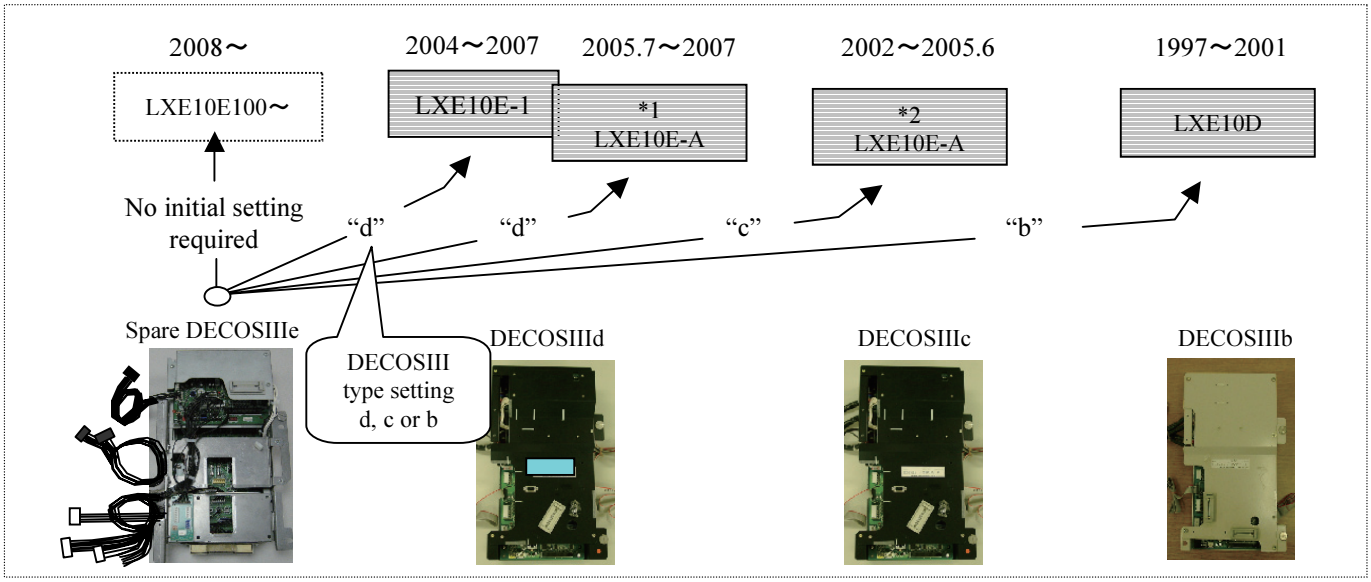

● Initial setting procedure

1. <u>In the case of LXE10E-1 or *1 LXE10E-A (DECOSⅢd)</u>
Set DECOSIII to "d" and set other items by referring to attached ① [Initial setting table for spare DECOSIIId].

2. <u>In the case of *2 LXE10E-A (DECOSⅢc)</u>
Set DECOSIII to "c" and set other items by referring to attached ② [Initial setting table for spare DECOSIIIc].

3. <u>In the case of LXE10D (DECOSⅢb)</u>
Set DECOSIII to "b" and set other items by referring to attached ③ [Initial setting table for spare DECOSIIIb].

Note :
There are 2 types of LXE10E-A . with *1 equipped DECOSIIId and *2 equipped DECOSIIIc, Confirm which model name is in group *1 or *2 by checking attached ② or ③.

● Initial setting procedure
Refer the procedure to attached ④ "Initial setting procedure for DECOSIIIe, IIId, IIIc, IIIb."

Subject	3. Initial setting to spare controller DECOSIIIe
Model	DECOSIIIe (LXE10E100～)

本頁は補用修理説明書には使用しない。

INITIAL SETTING is not required in most cases. However ----

In the case of LXE10E100～(DECOSIIIe), initial setting work is not required after replacing controller.
(Reason) The initial setting data before the controller failed has been already stored in display board. Then the stored data is transmitted to CPU board when power ON after replacement.

This corresponds to the **Case 1** in the next "Is INITIAL SETTING WORK required or not ?"
However the initial setting is **required** in some cases.

● When is INITIAL SETTING WORK required or not ?

Refer Case 1 to 4 below to next "INITIAL SETTING DATA TRANSMITTION".

---Normal cases---

Case 1. When controller DECOSIIIe (CPU board) is replaced with spare parts, initial setting work is **not required** as the data in display board is copied to CPU board.

Case 2. When display board is replaced with spare parts, initial setting work is **not required** as the data in CPU board is copied to display board.

---Rare cases---

Case 3. When controller DECOSIIIe (CPU board) taken from next reefer is rarely replaced, initial setting work is **not required** as the data in display board is copied to CPU board.

Contrary when display board taken from next reefer is rarely replaced, initial setting change work is **required** at least for container I.D. with same reason.

Case 4. When both controller DECOSIIIe (CPU board) and display board are rarely replaced with spare parts, initial setting work for all items is **required**.
In this case, the initial setting display comes up.

● INITIAL SETTING DATA TRANSMITTION between CPU board and Display board

		Display Board equipped on LXE10E100～	
		With data in display board (in EEPROM)	No data in display board (Example) Spare display board
CPU Board equipped on DECOSIIIe	No data in CPU b. (Example) Spare controller	The data in display board is transmitted to CPU board. **Case 1**	Initial setting display comes up. **Case 4**
	With data in CPU b. (in SRAM)	If container I.D. is not same, the data in display board is transmitted to CPU b. **Case 3**	Data in CPU board is transmitted to display b. **Case 2**

● When the initial setting work is required,

Set all items by referring to the attached ⑤ [Initial setting table for spare controller DECOSIIIe for LXE10E100 or later].

Subject	4. Up-loading to spare controller DECOSIIIe 5. Operation
Model	DECOSIIIe (LXE10E100) DECOSIIId (LXE10E-1, LXE10E-A) DECOSIIIc (LXE10E-A) DECOSIIIb (LXE10D)

4. Upgrade to the latest software version

After the replacement with the spare controller, the software needs to be upgraded.
Download the latest software and upgrade tool from Daikin Home Page.

Note: The unit is operated by using the software already installed in the spare controller.
However ensure that the software is upgraded to implement optimal operation.

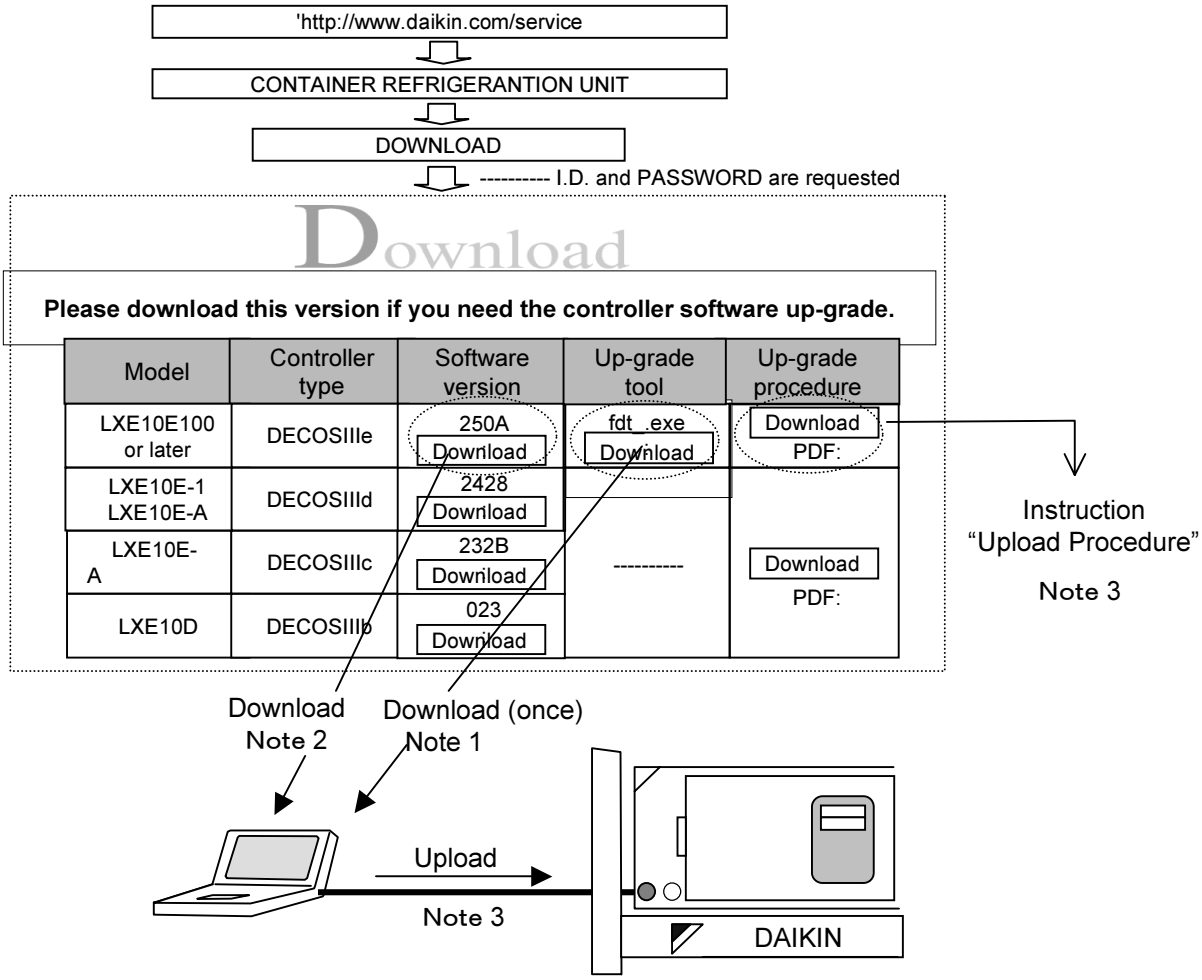

Note 1. Up-grade tool software --- fdt_4_00¥02.exe.
Up-grade tool software can be downloaded only once for the 1st up-grading.
Note 2. The latest controller software for DECOSIIIe ---25**.mot
Note 3. Refer instruction "Upload Procedure" for the uploading.

CAUTION

Never turn the power OFF or disconnect the battery connector while the software version upgrade is in progress. Otherwise, the software version upgrade will fall. In such case, retry the software version upgrade .

5. Operation

Confirm the software version number by manual check mode after completing software upgrade.
Then operate the unit.

LXE10E-1 & LXE10E-A INITIAL SETTING TABLE for SPARE CONTROLLER DECOSⅢd

LXE10E-1 & LXE10E-A スペアーコントローラーDECOSⅢdの初期設定表

別紙 Attached ①

MODEL NAME 機種名	※10.Optional fun.		※11.Basic function mode									※12.Optional Condition mode														※13.Input Data	
	USdA	dHu	DECOS3	LOG INT	REC SEN	OC-SET	HP	dISP	COMP	REHEAT	FASEN	C/F	CHARTLS	USdA1/2	H001	H002	H003	H004	H005	H006	D1--	D2--	D3--	D4--	D5--	SET ID	SET TIME
LXE10E-1 LXE10E-1A-1E	AU	OFF	d	60	ON	Sing	10	OFF	100	ON	L	F	ON	2	3	2	2	2	3	3	1	1	1	1	1	*	GMT
LXE10E-A5C-A5F	OFF	OFF	d	30	ON	Sing	10	OFF	100	OFF	OFF	C	OFF	1	3	2	2	2	3	3	1	1	1	1	1	*	GMT
LXE10E-A9B-A9C	OFF	OFF	d	30	ON	Sing	10	ON	100	OFF	OFF	C	OFF	1	3	2	2	2	3	3	1	1	1	1	1	*	GMT
LXE10E-A12C-A12F	OFF	OFF	d	30	ON	Sing	10	ON	100	OFF	OFF	C	OFF	1	3	2	2	2	3	3	1	1	1	1	1	*	GMT
LXE10E-A15C -A15J	OFF	OFF	d	60	ON	Sing	10	OFF	100	ON	OFF	C	ON	2	3	2	2	2	3	3	1	1	1	1	1	*	GMT
LXE10E-A15BR LXE10E-A15GR	OFF	OFF	d	60	ON	Sing	10	OFF	100	ON	OFF	C	ON	2	3	2	2	2	3	3	1	1	1	1	1	*	GMT
LXE10E-A18B-A18D	OFF	OFF	d	60	ON	Sing	10	OFF	100	ON	OFF	C	OFF	1	3	2	2	2	3	3	1	1	1	1	1	*	GMT
LXE10E-A19A	OFF	OFF	d	30	ON	Sing	10	ON	100	OFF	OFF	C	OFF	1	3	2	2	2	3	3	1	1	1	1	1	*	GMT
LXE10E-A21B-A21D	OFF	OFF	d	30	ON	Sing	10	OFF	100	OFF	OFF	C	ON	1	3	2	2	2	3	3	1	1	1	1	1	*	GMT
LXE10E-A23-A23C	OFF	OFF	d	60	ON	Sing	10	OFF	100	OFF	OFF	C	ON	2	3	2	2	2	3	3	1	1	1	1	1	*	GMT +8
LXE10E-A26B-A26E	OFF	OFF	d	60	ON	Sing	10	OFF	100	ON	OFF	C	OFF	2	3	2	2	2	3	3	1	1	1	1	1	*	GMT
LXE10E-A27B	OFF	OFF	d	60	ON	Sing	10	OFF	100	ON	OFF	C	ON	2	3	2	2	2	3	3	1	1	1	1	1	*	GMT
LXE10E-A29A	OFF	OFF	d	30	ON	Sing	10	OFF	100	OFF	OFF	C	ON	1	3	2	2	2	3	3	1	1	1	1	1	*	GMT
LXE10E-A31A-A31B	OFF	OFF	d	60	ON	Sing	10	OFF	100	ON	OFF	C	ON	2	3	2	2	2	3	3	1	1	1	1	1	*	GMT
LXE10E-A32A-A32B	OFF	OFF	d	60	ON	Sing	10	OFF	100	ON	H	C	OFF	2	3	2	2	2	3	3	1	1	1	1	1	*	GMT
LXE10E-A33-A33A	OFF	OFF	d	60	ON	Sing	10	OFF	100	ON	OFF	C	ON	2	3	2	2	2	3	3	1	1	1	1	1	*	GMT
LXE10E-A35-A35B	OFF	OFF	d	30	ON	Sing	10	OFF	100	OFF	OFF	C	OFF	1	3	2	2	2	3	3	1	1	1	1	1	*	GMT
LXE10E-A36-A36A	OFF	OFF	d	60	ON	Sing	10	OFF	100	ON	OFF	C	ON	2	3	2	2	2	3	3	1	1	1	1	1	*	GMT
LXE10E-A37	OFF	OFF	d	30	ON	Sing	10	ON	100	OFF	OFF	C	ON	1	3	2	2	2	3	3	1	1	1	1	1	*	GMT
LXE10E-A40-A40A	OFF	OFF	d	30	ON	Sing	10	ON	100	OFF	OFF	C	OFF	1	3	2	2	2	3	3	1	1	1	1	1	*	GMT
LXE10E-A41	OFF	OFF	d	30	ON	Sing	10	OFF	100	ON	OFF	C	OFF	1	3	2	2	2	3	3	1	1	1	1	1	*	GMT
LXE10E-A43	OFF	OFF	d	60	ON	Sing	10	OFF	100	ON	H	C	OFF	2	3	2	2	2	3	3	1	1	1	1	1	*	GMT
LXE10E-A44	OFF	OFF	d	60	ON	Sing	10	OFF	100	ON	H	C	OFF	1	3	2	2	2	3	3	1	1	1	1	1	*	GMT
LXE10E-A45-A45A	OFF	OFF	d	60	ON	Sing	10	OFF	100	ON	OFF	C	ON	2	3	2	2	2	3	3	1	1	1	1	1	*	GMT +8

Note 1. Comfirm MODEL NAME printed in the name plate mounted on the reefer unit.

注 1. 機種名は冷凍装置に貼付けてある機械銘板中の記載を確認して下さい。

別紙 Attached ①

LXE10E-A INITIAL SETTING TABLE for SPARE CONTROLLER DECOSIIIc　　LXE10E-A　スペアーコントローラーDECOSIIIcの初期設定表　　2006.1.15　　別紙 Attached ②

MODEL NAME Note 1	※7.Optional function		※8.Basic function mode								※9.Optional Condition setting mode														※10.Input Data	
	USdA	dHu	DECOS-3	LOG INT	REC SEN	OC-SET	HP	dISP	COMP	REHEAT	CHARTLS	USdA1/2	H001	H002	H003	H004	H005	H006	D1—	D2—	D3—	D-1-	D-2-	C/F	SET Id	SET TIME
LXE10E	USdA sensor	Dehumi-dification control	Controller setting	Logging interval	Data recorder sensor	Input power	Hose power	Panel lighting OFF	Comp. Unload setting	Reheat coil setting	D/H code indication	USdA sensor type	H code						D code					Temp. indication	Container I.D.	Controller set time
-A4	OFF	OFF	C	30	ON	Single	10	OFF	100	OFF	ON	1	3	2	2	1	3	3	1	1	1	1	1	C	*	GMT
-A5 -A5A -A5B	OFF	OFF	C	30	ON	Single	10	OFF	100	OFF	OFF	1	3	2	2	1	3	3	1	1	1	1	1	C	*	GMT
-A6 -A6R -A12 -A12A -A12B -A28	OFF	OFF	C	30	ON	Single	10	ON	100	OFF	OFF	1	3	2	2	1	3	3	1	1	1	1	1	C	*	GMT
-A7 -A11 -A20 -A26 -A26A	OFF	OFF	C	60	ON	Single	10	OFF	100	OFF ON	OFF	2	3	2	2	1	3	3	1	1	1	1	1	C	*	GMT
-A8 -A9 -A9R -A19 -A5BR	OFF	OFF	C	30	ON	Single	10	ON	100	OFF	OFF	1	3	2	2	1	3	3	1	1	1	1	1	C	*	GMT
-A14 -A15 -A15A -A15B	OFF	OFF	C	60	ON	Single	10	OFF	100	ON	ON	2	3	2	2	1	3	3	1	1	1	1	1	C	*	GMT
-A5 -A16 -A21 -A29	OFF	OFF	C	30	ON	Single	10	OFF	100	OFF	ON	1	3	2	2	1	3	3	1	1	1	1	1	C	*	GMT
-A17 -A17A	OFF	OFF	C	30	ON	Single	10	OFF	100	OFF	OFF	1	3	2	2	1	3	3	1	1	1	1	1	C	*	GMT
-A18 -A18A -A30	OFF	OFF	C	60	ON	Single	10	OFF	100	ON	OFF	1	3	2	2	1	3	3	1	1	1	1	1	C	*	GMT
-A21 -A21A	OFF	OFF	C	30	ON	Single	10	OFF	100	OFF	ON	1	3	2	2	1	3	3	1	1	1	1	1	C	*	GMT
-A24R	OFF	OFF	C	30	ON	Single	10	OFF	100	OFF	OFF	1	3	2	2	1	3	3	1	1	1	1	1	C	*	Jpn
-A15AR -A15B	OFF	OFF	C	60	ON	Single	10	OFF	100	ON	ON	2	3	2	2	1	3	3	1	1	1	1	1	C	*	GMT
-A27 -A27A	OFF	OFF	C	60	ON	Single	10	OFF	100	ON	ON	2	3	2	2	1	3	3	1	1	1	1	1	C	*	GMT
-A31	OFF	OFF	C	60	ON	Single	10	OFF	100	ON	ON	2	3	2	2	1	3	3	1	1	1	1	1	C	*	GMT

Notes　1.Comfirm **MODEL NAME** stamped in the name plate mounted on the reefer unit.　　注.　1.**機種名**は冷凍装置に貼り付けてある機械銘板中の記載を確認して下さい。

別紙 Attached ②

LXE10D INITIAL SETTING TABLE for SPARE CONTROLLER DECOSIIIb　イニシャル設定表（スペアーコントローラー）

別紙 Attached ③

MODEL NAME Note 1 機種名　注１	※7.Optional function setting mode オプション機能設定モード		※8.Basic function mode 基本機能設定モード							※9.Optional Condition setting mode オプション条件設定モード														※10.Input Data インプットデーター	
	USdA	dHu	DECOS-3	LOG INT	REC SEN	OC-SET	HP	dISP	COMP	CHARTLS	USdA1/2	H001	H002	H003	H004	H005	H006	D1—	D2—	D3—	D-1-	D-2-	C/F	SET Id	SET TIME
	USdA sensor connection	Dehumi-dification control	Controller setting	Logging interval	Data recorder sensor	Input power	Hose power	Panel Lighting OFF	Compressor Unload setting	D/H code alarm indication	USdA sensor type	H code						D code					Temp. indication	Container I.D.	Controller set time
LXE10D -1	OFF	OFF	b	30	ON	Dual	10	ON	100	OFF	1	3	2	2	2	3	3	1	1	1	1	1	C	*	GMT
LXE10D -2, 2A						Single																			
LXE10D -A17																									
LXE10D -A1	OFF	OFF	b	30	ON	Single	10	OFF	100	OFF	1	3	2	2	2	3	3	1	1	1	1	1	C	*	GMT
LXE10D -A15, A15A, A15B																									
LXE10D -A22																									
LXE10D -A2	OFF	OFF	b	30	ON	Dual	10	OFF	100	OFF	1	3	2	2	2	3	3	1	1	1	1	1	C	*	GMT
LXE10D -A7																									
LXE10D -A3	OFF	OFF	b	30	ON	Single	10	OFF	100	ON	1	3	2	2	2	3	3	1	1	1	1	1	C	*	Taiwan
LXE10D -A4	OFF	OFF	b	30	ON	Dual	10	OFF	100	OFF	1	3	2	2	2	3	3	1	1	1	1	1	C	*	GMT
LXE10D -A5R, A12R	OFF	OFF	b	30	ON	Single	10	OFF	100	OFF	1	3	2	2	2	3	3	1	1	1	1	1	C	*	Hawai
LXE10D -A6	OFF	OFF	b	30	ON	Dual	10	OFF	100	OFF	1	3	2	2	2	3	3	1	1	1	1	1	C	*	GMT
LXE10D -A8	OFF	OFF	b	30	ON	Dual	10	ON	100	OFF	1	3	2	2	2	3	3	1	1	1	1	1	C	*	GMT
LXE10D -A9																									
LXE10D -A11, A11A, A11B																									
LXE10D -A14, A14A																									
LXE10D -A24						Single																			
LXE10D -A2, A5	OFF	OFF	b	30	ON	Dual	10	OFF	100	OFF	1	3	2	2	2	3	3	1	1	1	1	1	C	*	GMT
LXE10D -A10, A10A						Single																			
LXE10D -A10C, A10D, A10E -A10F, A10G									33																
LXE10D -A12	OFF	OFF	b	30	ON	Single	10	ON	100	OFF	1	3	2	2	2	3	3	1	1	1	1	1	C	*	GMT
LXE10D -A13, A13A	OFF	OFF	b	30	ON	Single	10	OFF	100	OFF	1	3	2	2	2	3	3	1	1	1	1	1	C	*	GMT

Notes　1.Comfirm MODEL NAME mentioned in the name plate mounted on the reefer unit.

注.　1.機種名は冷凍装置に貼り付けてある機械銘板中の記載を確認して下さい。

別紙 Attached ③

Subject	INITIAL SETTING PROCEDURE for DECOSIIIe, IIId, IIIc and IIIb	別紙 Attache ④
Model	LXE10E100 or later, LXE10E-1, LXE10E-A & LXE10D	

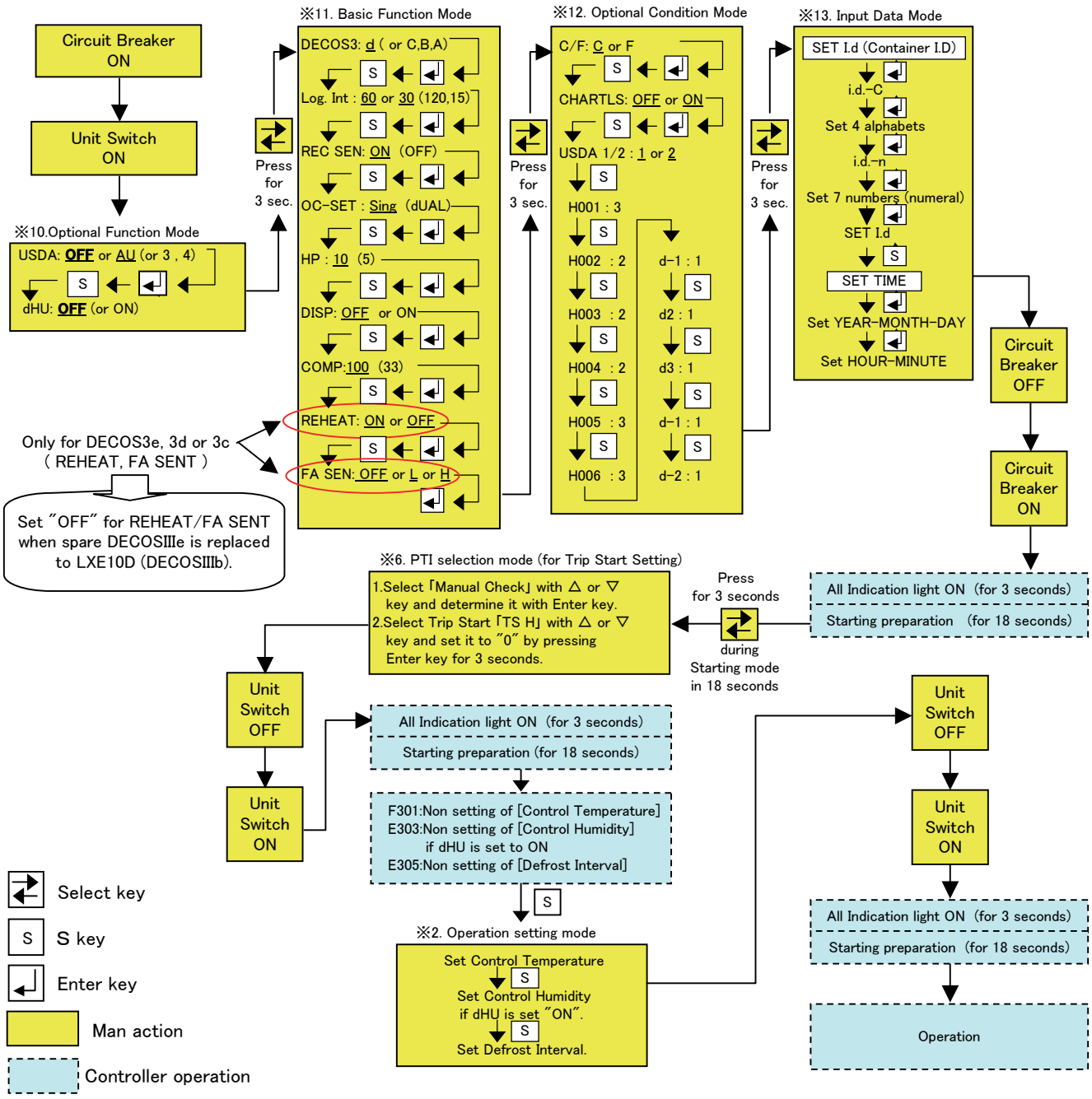

Key Operation

1. Underlined figures show the value of the most usual case. Actually all the settings have been factory-set by following INITIAL SETTING TABLE. If there is not specify special instruction, set all figures to the "Factory Set".
2. When the setting change is required, select the desired setting using UP or DOWN key, and press ENTER key to confirm, and then turn circuit breaker OFF.
3. When controller is replaced with the spare parts, confirm the **MODEL NAME** first, and then set each item by following the **INITIAL SETTING TABLE**.

DECOS3e for LXE10E100 or later

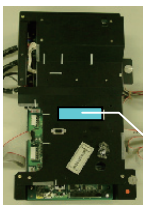

DECOS3d for LXE10E-1 & LXE10E-A

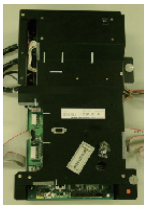

DECOS3c for LXE10E-A

DECOS3b for LXE10D

INITIAL SETTING TABLE for SPARE CONTROLLER DECOSⅢe for LXE10E100 or later

LXE10E100以降 スペアーコントローラーDECOSⅢeの初期設定表

別紙 Attached ⑤

MODEL NAME	※10.Optional function		※11.Basic function mode									※12.Optional Condition mode														※13.Input Data	
機種名	USdA	dHu	DECOS3	LOG INT	REC SEN	OC-SET	HP	dISP	COMP	REHEAT	FASEN	C/F	CHARTLS	USdA1/2	H001	H002	H003	H004	H005	H006	D1--	D2--	D3--	D4--	D5--	SET ID	SET TIME
LXE101A1	AU	OFF	e	60	ON	Sing	10	OFF	100	ON	L	F	ON	2	3	2	2	2	3	3	1	1	1	1	1	*	GMT
LXE102A1	OFF	OFF	e	60	ON	Sing	10	OFF	100	ON	OFF	F	ON	2	3	2	2	2	3	3	1	1	1	1	1	*	GMT
LXE132A1	OFF	OFF	e	60	ON	Sing	10	OFF	100	ON	H	C	OFF	2	3	2	2	2	3	3	1	1	1	1	1	*	GMT
LXE133A1	OFF	OFF	d	60	ON	Sing	10	OFF	100	ON	OFF	C	ON	2	3	2	2	2	3	3	1	1	1	1	1	*	GMT
LXE135A1	OFF	OFF	e	30	ON	Sing	10	OFF	100	OFF	OFF	C	OFF	1	3	2	2	2	3	3	1	1	1	1	1	*	GMT
LXE136A1	OFF	OFF	e	30	ON	Sing	10	OFF	100	ON	OFF	C	OFF	2	3	2	2	2	3	3	1	1	1	1	1	*	GMT
LXE136A1R	OFF	OFF	e	30	ON	Sing	10	OFF	100	ON	OFF	C	ON	2	3	2	2	2	3	3	1	1	1	1	1	*	GMT
LXE144A1	OFF	OFF	e	60	ON	Sing	10	OFF	100	ON	H	C	OFF	1	3	2	2	2	3	3	1	1	1	1	1	*	GMT
LXE145A1	OFF	OFF	e	60	ON	Sing	10	OFF	100	ON	OFF	C	ON	2	3	2	2	2	3	3	1	1	1	1	1	*	GMT

Note 1. Comfirm MODEL NAME printed in the name plate mounted on the reefer unit.

注 1. 機種名は冷凍装置に貼付けてある機械銘板中の記載を確認して下さい。

別紙 Attached ⑤

DAIKIN

TECHNICAL INFORMATION

DAIKIN INDUSTRIES LTD
AFTER SALES SERVICE DIV.

Model	EMERGENCY OPERATION
Subject	LXE10E100 or later, LXE10E-A, LXE10D

In case of the controller malfunction, Emergency Operation can be excuted by using emergency operation kit.

[1] OPERATING CONDITION during EMERGENCY OPERATION

1) Available at Frozen Operation Mode (SP=-10.1℃～-30℃)
2) Temperature can not be controlled.
   Turn the circuit breaker ON or OFF to maintain the temperature.
3) For Cooling operation
   * Compressor,Evaporator Fan Motor with low speed and Condenser Fan Motor run continuously.
   * Electronic expansion valve opening fixed
   * Suction Modulation Valve opening fixed
   * Safety devices actuated RPP, HPS and CTP only
3) For Heating operation
   * Evaporator Fan Motor with high speed runs continuously.

[2] COMPONENTS to be prepared for EMERGENCY OPERATION

1. SHORT CIRCUIT SOCKETS
   * Stored on the upper right of the controller --LXE10E100 or later
   * Stored on the back of the controller box --LXE10E
   * Stored on the right side on the terminal board. --LXE10D
2. EMERGENCY CAP (1080263) for Electronic expansion valve --LXE10E/10D
3. EMERGENCY MAGNET(1270530) for Suction modulation valve--LXE10E
4. EMERGENCY MAGNET(1896110) for Electronic expansion valve and Suction modulation valve --LXE10E100 or later

[1] ON-SITE WORK

1. WIRING CHANGE
   1) Wiring change for cutting off the power to CPU board
   2) Wiring change for making the forced running of Compressor, Condenser Fan Motor and Evaporator Fan Motors.
2. OPENING ADJUSTMENT for Electronic Expansion Valve.
3. OPENING ADJUSTMENT for Suction Modulation Valve.

DAIKIN

TECHNICAL INFORMATION

DAIKIN INDUSTRIES LTD
AFTER SALES SERVICE DIV.

Subject	Emegency Operation, WIRING CHANGE 1/3
Model	LXE10E100 or later, 102A

[1] WIRING CHANGE

	Cooling Operation	Heating Operation
Power OFF	① Turn the circuit breaker OFF.	
For cutting off the power to CPU board	② Disconnect power supply connector CN1(Red) mounted on I/O board. Remove Short Circuit Connector SCC1-1(Blue), SCC1-2(Red) and SCC3(White) mounted on controller. 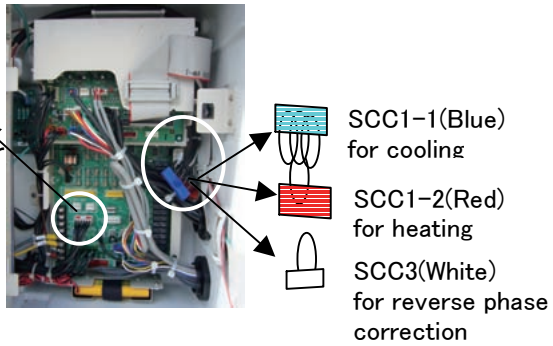 	
Forcible operation of Compressor ,CFM and EFM	③ Connect SCC3(White) to CN-C1	
	④ Connect Short Circuit Connector SCC1-1(Blue) to CN8 on I/O board. 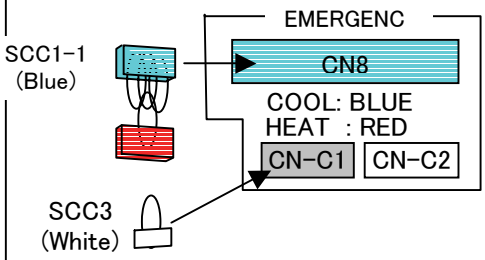 	④ Connect Short Circuit Connector SCC1-2(Red) to CN8 on I/O board. 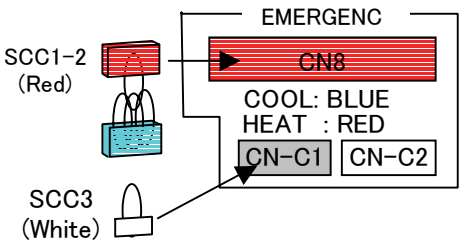
Confirmation of power supply	⑤ Turn the circuit breaker ON. If the power supply is in reverse phase, the compressor does not operate and CFM runs reversely.	⑤ Turn the circuit breaker ON. If the power supply is in reverse phase, EFM runs reversely with high speed and air comes out from outlet hole shown below. 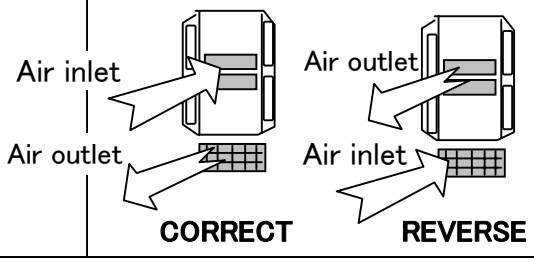
Correction of reverse phase power	⑥ In case of reverse phase, turn the circuit breaker OFF and replace the reverse phase correction socket to opposite side. ("Socket CN-C1 to CN-C2" or "CN-C2 to CN-C1")	

[2] EV opening adjustment

① Disconnect connector CN11 for EV power cable.

② Remove EV coil.

③ Set emergency magnet to EV body with indication "UPSIDE" upward.

④ Turn the magnet clockwise in the open direction until coming small click sound for full open.

⑤ Close 90 to 180 degree to counter clockwise.

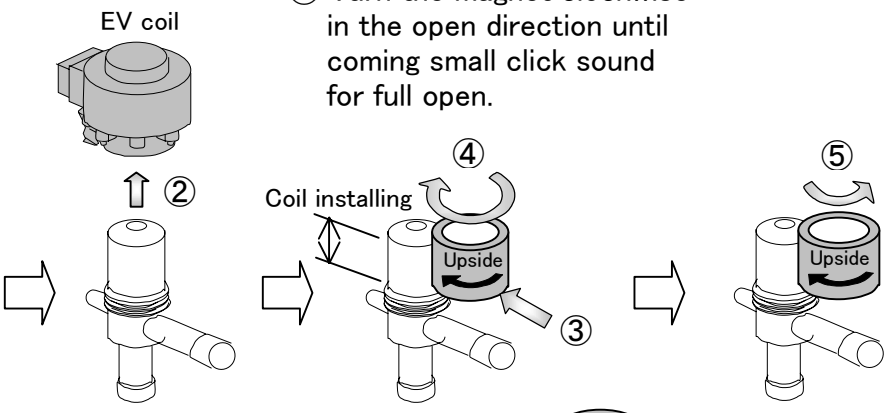

Emergency magnet (No. 1896110)

Yellow

Don't use emergency magnet "1270530" for LXE10E-A.

Emergency magnet (No. 1270530)

Silver label

Recommendation !! for quick pull-down operation

To shorten the operation times, it is recommended to open slightly.

However close slightly the opening, if the frost is observed around the compressor body or the super heat is small due to the operation in wet conditions.

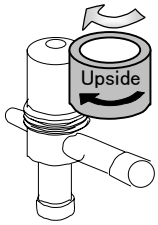

[3-1] SMV opening adjustment (Full open)

① Disconnect connector CN9 for SMV power cable.

② Remove the coil from SMV body.

③ Set emergency magnet to SMV body with indication

④ Turn the magnet clockwise in the open direction until coming small click sound for full open.

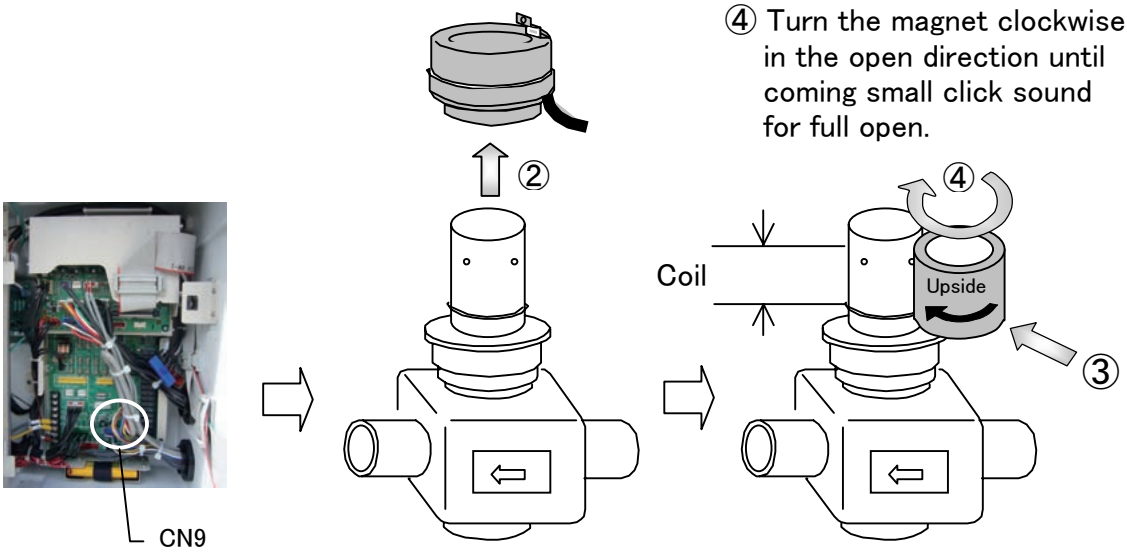

Emergency magnet (No. 1896110)

Yellow

Don't use emergency magnet "1270530" for LXE10E-A.

Emergency magnet (No. 1270530)

Silver label

DAIKIN

TECHNICAL INFORMATION

DAIKIN INDUSTRIES LTD
AFTER SALES SERVICE DIV.

Model	Emergency Operation, WIRING CHANGE 1/3
Subject	LXE10E-A, LXE10D

[1] WIRING CHANGE

	Cooling Operation	Heating Operation
For cutting off the power to CPU board	① Turn the circuit breaker OFF. ② Disconnect the power supply connector CN82(White) on SMV board.	
For making the forced cooling operation with running of COMP., CFM and EFM or heating operation with running of EFM.	③ Remove Short Circuit Connectors stored on back of controller. SCC1-1(Blue), SCC1-2(Red), SCC2(Blue) and SCC3(White)	
	④ Connect Short Circuit Connector SCC1-1(Blue) to CN8 SCC2(Blue) to CN9 SCC3(White) to CN1 on terminal board.	④ Connect Short Circuit Connector SCC1-2(Red) to CN8 SCC2(Blue) to CN9 SCC3(White) to CN1

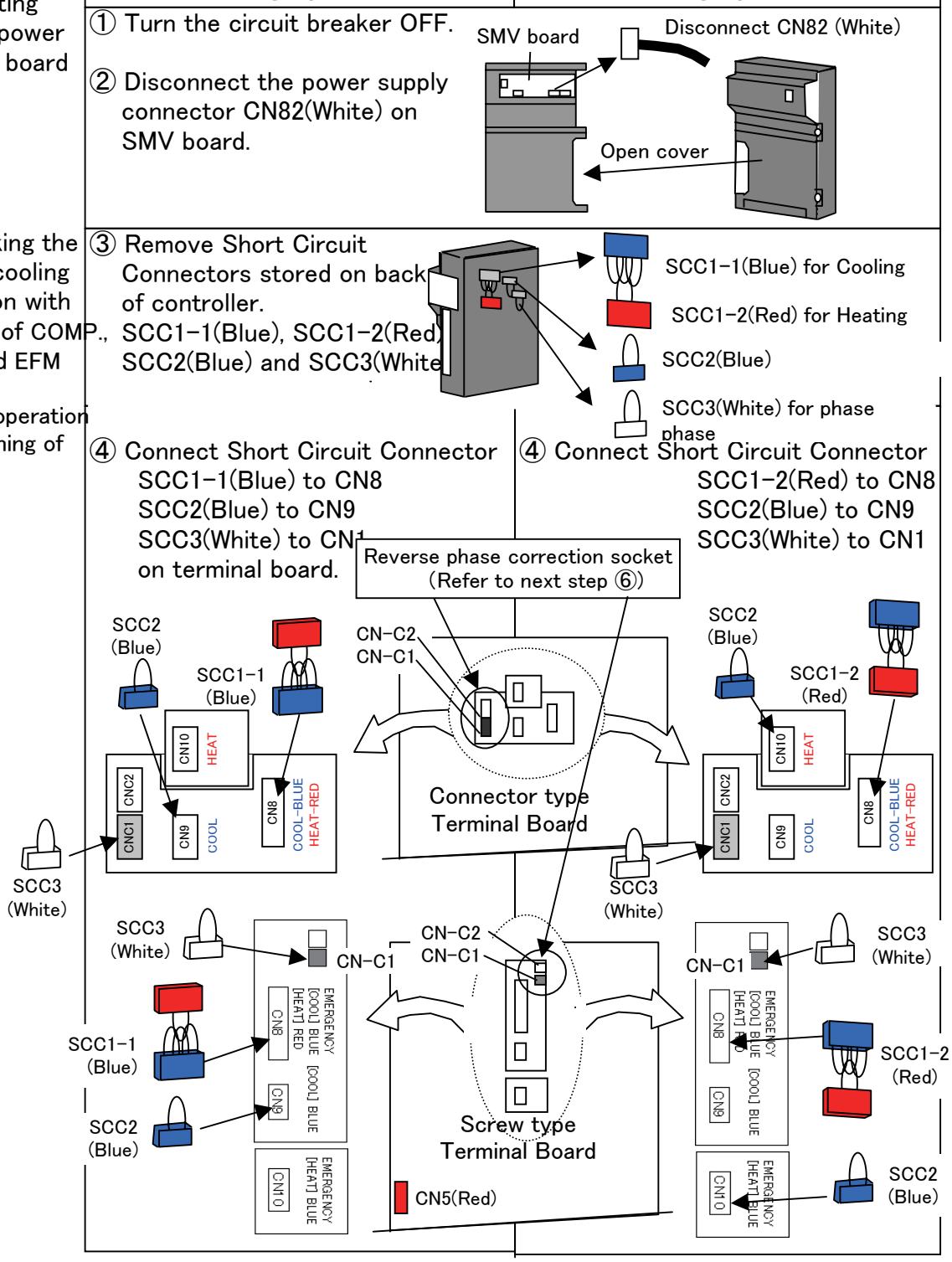

Subject	Emergency Operation, EV opening adjustment 2/3

For checking reverse phase power	⑤ Turn the circuit breaker ON. If the power is in reverse phase, compressor can not be run and CFM runs reversely.	⑤ Turn the circuit breaker ON. If the power is in reverse phase, EFM runs reversely with high speed and air comes out from Outlet Hole shown below. 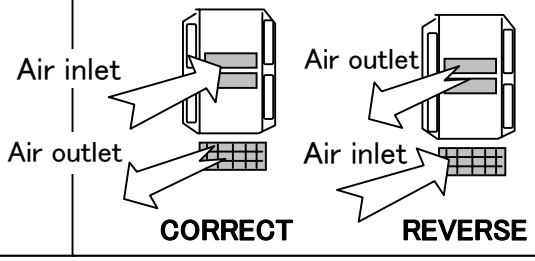
For correction of reverse phase power	⑥ If it is in reverse phase, turn the circuit breaker OFF and replace the reverse phase correction socket to opposite side. ("Lower socket CN-C1 to Upper CN-C2" or "Upper CN-C2 to Lower CN-C1")	

[2] EV opening adjustment (1/4 open)

① Remove the coil ② Set the emergency coil cap. ③ Close fully ④ Open 60 or 120 degree to counter clockwise.

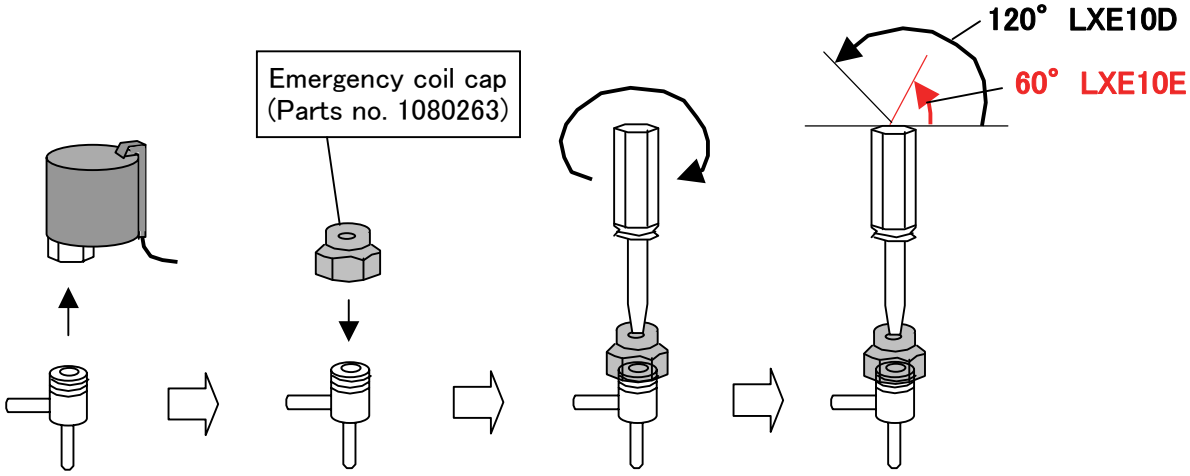

Recommendation !! **＊ EV opening during pull-down operation**

To shorten the operation hours, it is recommended that the opening can be adjusted up to **max. 50%.**

However if the frost is observed around the comp. body or the super heat is insufficient due to wet operation, close slightly the opening.

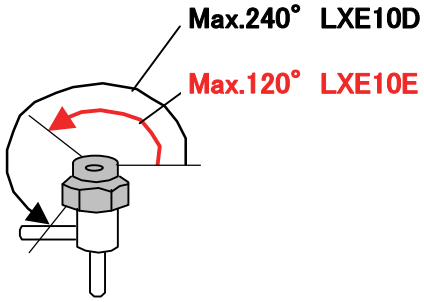

[3-1] SMV opening adjustment (Full open)

① Turn the No.1 dip-switch on.

② Turn circuit breaker on.

③.Then listen to the active noise "Ta--,Ta--" from SMV.

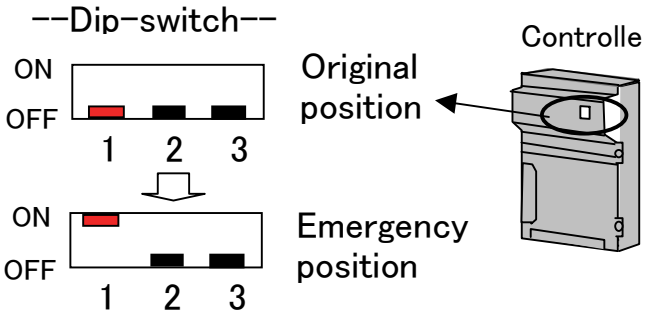

[3-2] SMV opening MANUAL adjustment (Full open)

When SMV adapter board as bad as controller is malfunctioned, apply the manual adjustment followed below.

Note :
When SMV adapter board is malfunctioned but not controller, the manual adjustment can be applied, too.

① Remove the coil from SMV body.

② Contact the emergency magnet to the coil installing section of the valve with the UPSIDE up.

③ Rotate the emergency magnet counter-clockwise to open the valve fully.

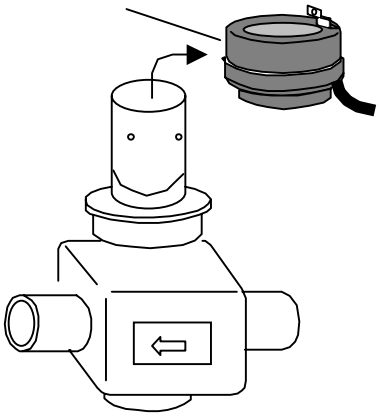

Emergency Magnet
(Parts no. 1270530)

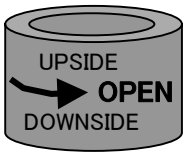

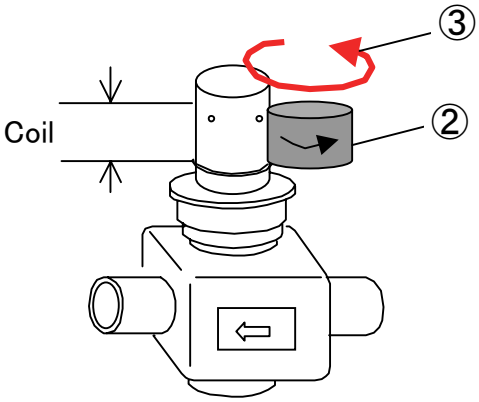

When the valve is fully opened, inside driving magnet will be inactive and the emergenct magnet can be removed.

DAIKIN

TECHNICAL INFORMATION

DAIKIN INDUSTRIES LTD
AFTER SALES SERVICE DIV.

Subject	EV DIAGNOSIS (EV:Electronic Expansion Valve) 1/4
Model	LXE10E-A, LXE10E-1, LXE10D

When EV malfunction is diagnosed, check EV coil and EV body separately.
(EV coil first and EV body later)

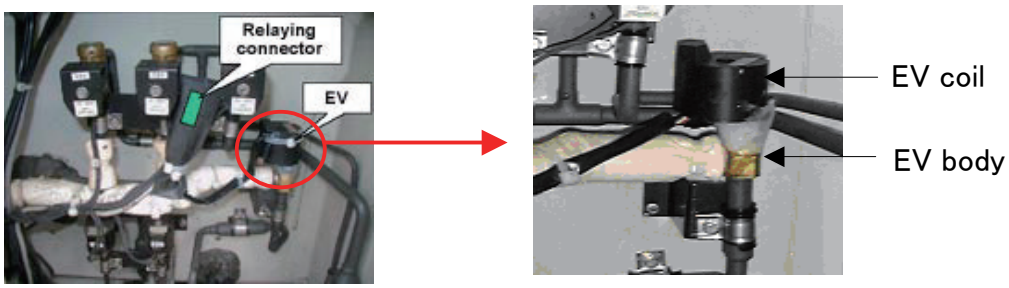

Check EV coil

Circuit breaker OFF

EV coil resistance 150 Ω/phase ? (**Note 1**)

- NO (No good) → Replace EV coil (**Note 6**)
- YES (Good) ↓

Circuit breaker ON

Active vibration from EV coil ? (**Note 2**)

- NO (No signal from controller) → Check and replace controller or CPU board
- YES ↓

Check EV body

Circuit breaker OFF

Remove EV coil from the body → EV body is now fully open.

Valve shaft lifted ? Bellows broken ? (**Note 3**)

- NO (No lifting) → Check and replace EV body (**Note 6**)
- YES (Lifting) ↓

Water or moisture inside bellows ?

- YES → Blow off by compressed air and dry inside bellows. (**Note 4**)
- NO ↓

Subject	EV DIAGNOSIS (EV:Electronic Expansion Valve) 2/4

Disconnect socket CN18 (white) on CPU connected to EV coil → Why is CN18 to be disconnected ? (**Note 5**)

↓

Operate the unit
(Circuit breaker ON,Unit switch ON)

↓

EV body inside clogged ?
(Fully open now)

- YES → Check and replace EV body
- NO → Check others →
  1. Filter, located on EV inlet, clogged ?
  2. LSV not opened ?
  3. Filter, located on LSV inlet, clogged ?
  4. Drier clogged ?
  5. SMV not opened ?
  6. Shortage of refrigerant ?
  7. EIS or EOS malfunction ?
  8. ----- ?

Note 1 — EV coil resistance 150 Ω/phase ?

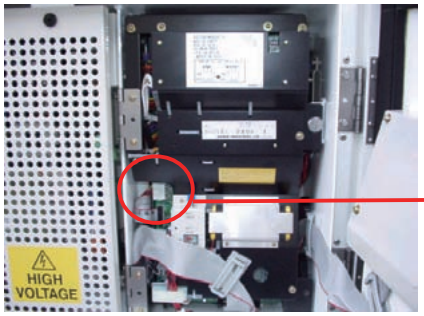

Socket CN18

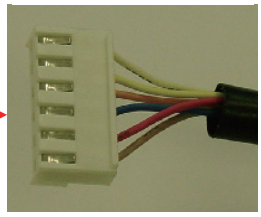

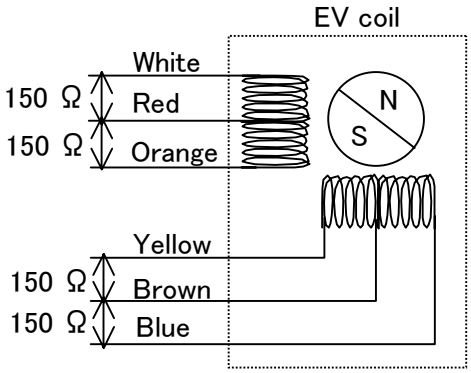

① Disconnect CN18 (white) on CPU board connected to EV coil.

② Measure the resistance (150Ω) of each phase between White-Red, Red-Orange, Yellow-Brown, Brown-Blue.

③ After measuring 150Ω, connect CN18 again.

Note 2 — Active vibration from EV coil ?

Let's use EV initial opening function of controller when power ON for checking active vibration from EV coil.

① Turn circuit breaker ON

② Unit Switch ON with your left hand.

Then after passing 21 seconds (3 seconds for all lighting 8888 on LED and 18 seconds for internal preparation of controller), you will listen to active noise from controller.

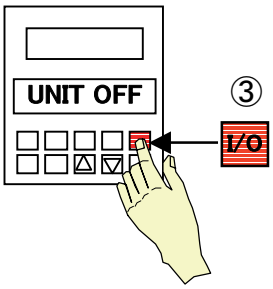

Subject	EV DIAGNOSIS (EV:Electronic Expansion Valve) 3/4

③ When the active noise comes, press Select Key.
④ Further press Up key 7 times.

Then the change of initial opening in % of EV can be watched on LCD.

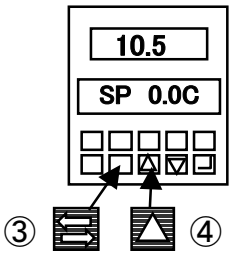

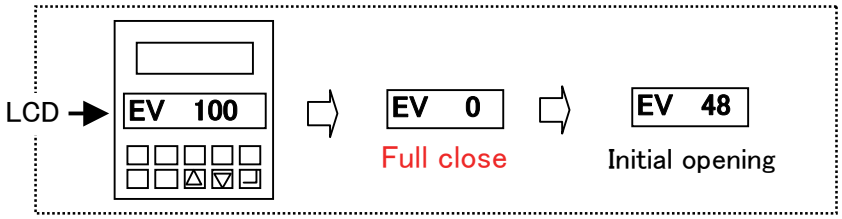

⑤ Touch EV coil and check with your right hand whether the active vibration is just linking to the change of the initial opening shown in LCD.

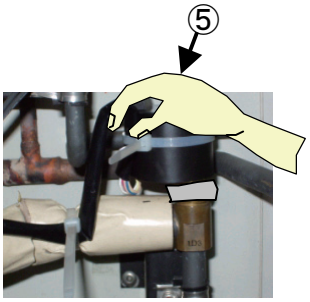

Note 3 — Valve shaft lifted ? Bellows broken ?

When EV coil is removed, valve shaft is fully opened. If you push the top of valve shaft with small screw driver, the shaft can be lifted down 0.7 mm.

Push here

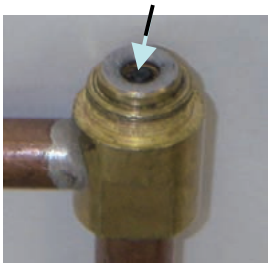

Check inside bellows whether it is damaged. The pictures below show the damage on top of the spiral due to expantion of iced water for the long time operation.

Note 4 — Blow off by compressed air and dry inside bellows.

Blow off the bellows by compressed air and dry by drier to remove the moisture inside bellows.

If water comes out, this is the reason that EV did not work correctly due to ice and leads to E109 (abnormal low pressure) or F803 (unit shut down) especially in Frozen Mode.

Blow off here

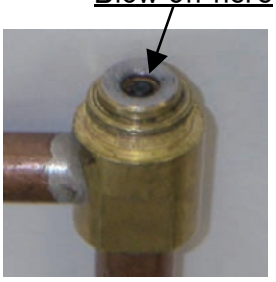

Note 5 — Why is CN18 to be disconnected ?

Unless disconnecting CN18, the pusher piece connected to EV coil is separately left out from the driven section by transferring signal from controller.

Pusher piece

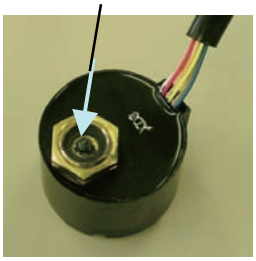

Note 6 — Replace EV body

There are 2 types of EV coil of spare parts.

EV coil with long cable connected to controller

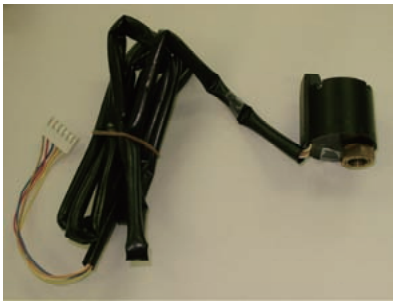

1381430

EV coil with short cable connected to relaying connector

0954619

● Installation of EV coil (Both types are same)

① Blow off the bellows by compressed air and dry by drier to remove the moisture on this part.

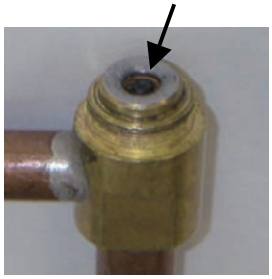

② Put the **LOCKTITE** with 2 lines around screw part and shoulder part of EV body.

Note ＊ Don't put so much "LOCKTITE".
＊ Check back side using a mirror.

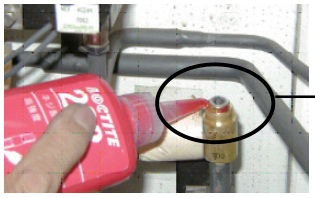

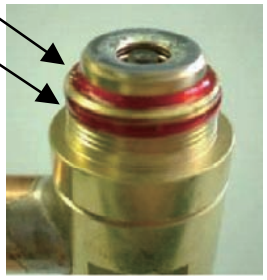

③ Install EV coil to the body.

④ After fixing the flare nut, plaster with **SILICONE SEALANT** on the nut between EV coil and body.

Note ＊ Take out coil substance or other contamination before plastering..
＊ Check back side using a mirror.

⑤ Clamp EV coil cable to the coil and EV outlet pipe

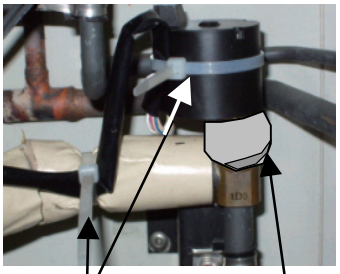

DAIKIN

TECHNICAL INFORMATION

DAIKIN INDUSTRIES LTD
AFTER SALES SERVICE DIV.

Subject	**F603 related to SMV board malfunction**
Model	**LXE10E-A, LXE10E-1**

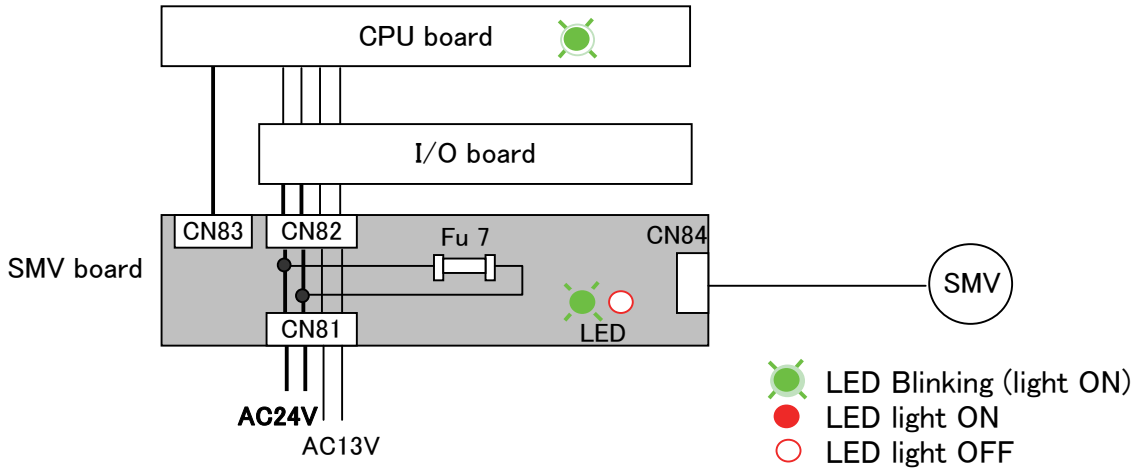

	Malfunction	Alarm	LED lamp (SMV board) Green	LED lamp (SMV board) Red	LED lamp (CPU Green	Operation
	Normal: Unit Switch OFF	No alarm	◉	○	◉	Stop
	Normal: Normal operation	No alarm	◉	○	◉	Continued
1	No 24V power (CN81) or Fuse 4 brown (E103 during operation)	F603 (E103)	○	○	◉	Shut down
2	No 13V power (CN81) or Fuse 5 brown	No display LED/LCD	◉	●	○	Shut down
3	No 24/13V power (CN81) or Fuse 4 & 5 brown	No display LED/LCD	○	○	○	Shut down
4	Fuse 7 (SMV board) brown	F603	○	○	◉	Shut down
5	CN82 (SMV board) disconnection --No 24/13V power to I/O & CPU.	No display LED/LCD	◉	○	○	Shut down
6	CN83 (SMV board) disconnection --No communication between CPU and SMV board or SMV board failure	F603	◉	●	◉	Shut down
7	CN84 (SMV coil) disconnection --or SMV coil failure	none	◉	○	◉	Continued
8	Miss setting to Controller (Decos3"b" or "C" for LXE10E)	F603 E603	◉	○	○	Shut down
9	SMV board failure	E603	??	??	◉	Continued

DAIKIN

TECHNICAL INFORMATION

DAIKIN INDUSTRIES LTD
AFTER SALES SERVICE DIV.

Subject	REPLACEMENT OF PTCT BOARD
Model	LXE10E, LXE10D, LXE10CA/10C, LXE5C

[1] FUNCTION OF PTCT BOARD

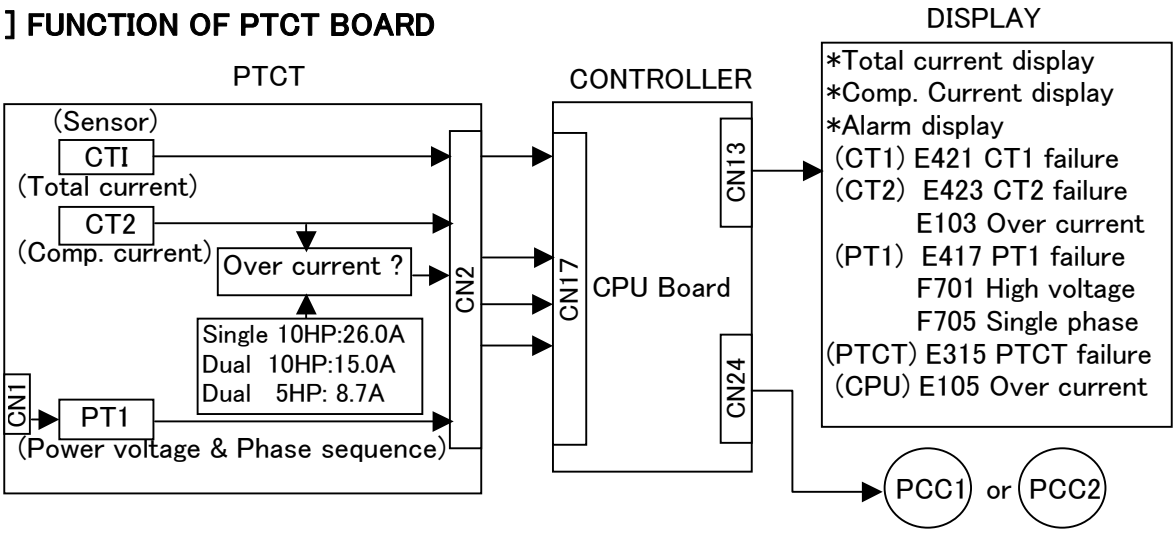

[2] REPLACEMENT OF PTCT BOARD

Spare parts, PTCT BOARD

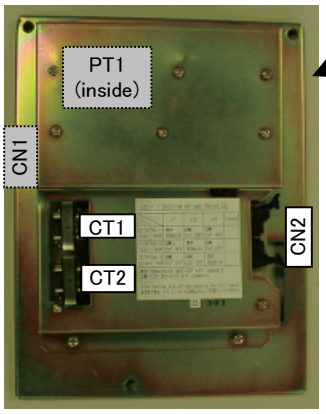

Mounting Plate
* Use for LXE5C,LXE10C
* Remove for LXE10D,LXE10E

Back view

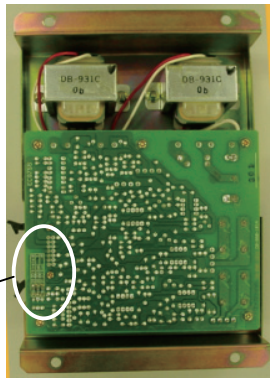

3 Jumpers for over current setting

J3	Single 10
J2	Dual 5
J1	Dual 10

Caution !!

Cut the jumpers depending on the Single (400V only) or Dual (400V/200V) power and 10 or 5 HP of the compressor shown on below before installing the PTCT BOARD from spare parts.

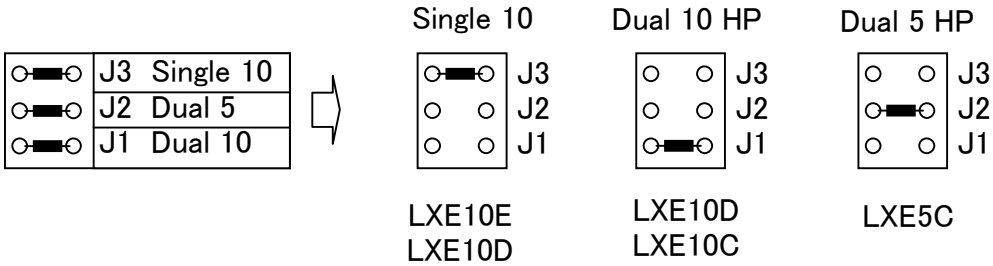

DAIKIN

TECHNICAL INFORMATION

DAIKIN INDUSTRIES LTD
AFTER SALES SERVICE DIV.

Subject	JUDGEMENT with Liquid/Moisture Indicator
Model	LXE10E100 or later

Liquid/Moisture Indicator permits checking of the refrigerant flow rate and moisture content in the refrigerant.

(1) Moisture indicator

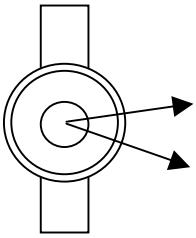

Color	Judgement
Green	Dry
Yellow	Wet (Contains excessive moisture)

ATTENTION 1 !!

Replace refrigerant

(2) Judgement for refrigerant flow rate (Normal, Shortage or Overcharge)

Operation		Judgement	
Frozen operation	RS<approx. 0 ℃ Full	Normal	Refrigerant charge is normal if the indicator is full of liquid when RS is under approx. 0 deg. C.
	RS<approx 0 ℃ Flashing	Shortage	Refrigerant charge is short if the indicator shows flashing of refrigerant when RS is under approx 0 deg. C.
	RS>approx 0 ℃ Flashing	Normal in most cases	Refrigerant charge is normal with flashing in the indicator in most cases, when RS is above approx 0 deg. C,
Chilled operation	Flashing	Normal in most cases	Refrigerant charge is normal with flashing in the indicator in most cases, during chilled operation with capacity control.

ATTENTION 2 !!

approx. 0 deg. C

ATTENTION 3 !!

As flashing here does not mean gas shortage, do not charge with additional refrigerant.

Possibly caused by overcharging

ATTENTION 3 !!

In the case of overcharge or shortage of refrigerant, recover all refrigerant from the unit and charge with new refrigerant R134a with rated charged amount of 5.2Kg for LXE10E100 or later
and 5.8Kg for LXE10E101A and 102A. Refrigerant overcharge may cause scroll compressor

DAIKIN

TECHNICAL INFORMATION

DAIKIN INDUSTRIES LTD
AFTER SALES SERVICE DIV.

Subject	JUDGEMENT with Liquid/Moisture Indicator
Model	LXE10E-A, LXE10E-1

Liquid/Moisture Indicator permits checking of the refrigerant flow rate and moisture content in the refrigerant.

(1) Moisture indicator

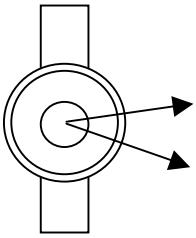

Color	Judgement
Green	Dry
Yellow	Wet (Contains excessive moisture)

ATTENTION 1 !!

Replace refrigerant

(2) Judgement for refrigerant flow rate (Normal, Shortage or Overcharge)

Operation		Judgement	
Frozen operation	RS<approx. −10 ℃ Full	Normal	Refrigerant charge is normal if the indicator is full of liquid when RS is under approx. −10 deg. C.
	RS<approx −10 ℃ Flashing	Shortage	Refrigerant charge is short if the indicator shows flashing of refrigerant when RS is under approx −10 deg. C.
	RS>approx −10 ℃ Flashing	Normal in most cases	Refrigerant charge is normal with flashing in the indicator in most cases, when RS is above approx −10 deg. C,
Chilled operation	Flashing	Normal in most cases	Refrigerant charge is normal with flashing in the indicator in most cases, during chilled operation with capacity control.

ATTENTION 2 !!

approx. −10 deg. C

ATTENTION 3 !!

As flashing here does not mean gas shortage, do not charge with additional refrigerant.

Possibly caused by overcharging

ATTENTION 3 !!

In the case of overcharge or shortage of refrigerant, recover all refrigerant from the unit and charge with new refrigerant R134a with rated charged amount of 4.6 Kg or 4.8 kg (LXE 10E-A) or 5.4 Kg (LXE10E-1).
Refrigerant overcharge may cause scroll compressor damage.

DAIKIN

TECHNICAL INFORMATION

DAIKIN INDUSTRIES LTD
AFTER SALES SERVICE DIV.

Subject	RS/SS SENSOR MALFUNCTION
Model	LXE10E100 or later, LXE10E-A, LXE10E-1, LXE10D, LXE10CA/10C,

● LXE10E100 or later, LXE10E-A, LXE10E-1, LXE10D 1999～

Malfunction	Back up Sensor	Action
SS (E401)	1st: DSS 2nd: RS-2℃	①Check if the connector to each sensor is tightened ②Then check the sensor with the characteristics table shown in end of service manual. ③Replace the sensor.
RS (E403)	1st: DRS 2nd: SS+2℃	
DSS (E402)	SS	
DRS (E404)	RS	
SS+DSS+RS (F401)	Unit stops. (No back up)	
RS+DRS+SS (F403)	Unit stops. (No back up)	

● LXE10D 1998 & LXE10C/10CA

Malfunction	Back up Sensor	First Action	Temporal countermeasure
SS (E401)	RS-2℃ in Chilled Mode	①Check if the connector to each sensor is tightened ②Then check the sensor with the characteristics table shown in end of	Replace the connector to DSS.
RS (E403)	SS+5℃ in Frozen Mode SS+2℃ in Partial F. Mode		Replace the connector to DRS.
DSS (E402)	SS		
DRS (E404)	RS		
SS+RS (F401 or F403)	Unit stops. (No back up)		Replace the connector to DSS in Chilled Mode DRS in P.F. or Frozen Mode.

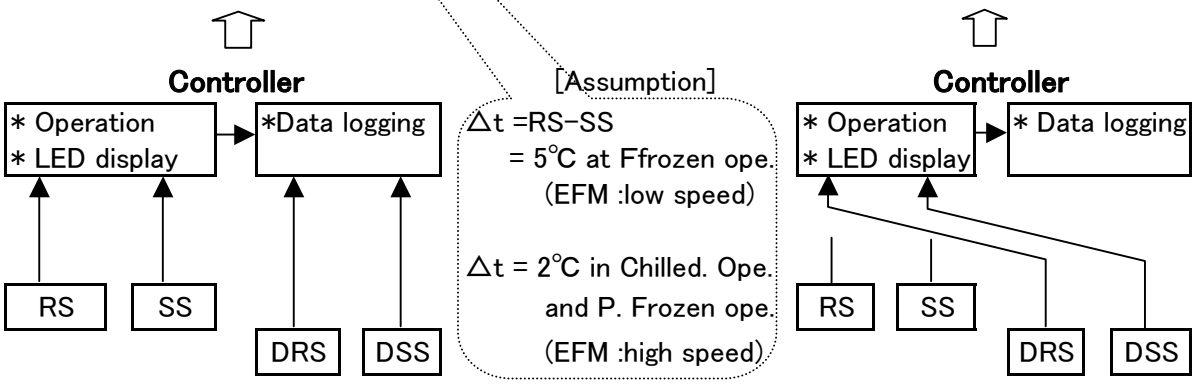

DAIKIN

SERVICE NEWS

番号:----

DAIKIN INDUSTRIES LTD
AFTER SALES SERVICE DIV.

Subject	USDA SENSOR ALARM (E425/E427/E429)
Model	LXE10E100 or later, LXE10E-A, LXE10D, LXE10CA/10C

Unit	USDA Sensor Connection	USDA Setting	USDA Miss-setting		
Unit with USDA Receptacle (option)	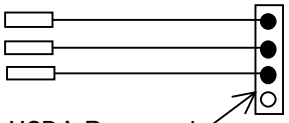	ON	OFF (→ON)	No alarm	OFF changes to ON auto-matically
	USDA Receptacle No connection 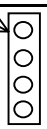	OFF	ON	**E425 E427 E429**	Change to OFF
	No connection	OFF		**E425 E427 E429**	Refer to below

[Malfunction]

* Short circuited internally between 2 wires due to wet.
* Mormentaly energized⇒Chnged from OFF to ON automatically ⇒Recognized abnormal resistance of the sensos ⇒Alarm appeared
* Countermeasure: Clean, dry and seal with Sillicon Patty.

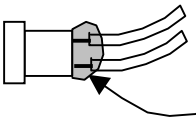

Clean, dry and seal with Sillicon Patty.

Standard unit (Without USDA Receptacle)	No connection	OFF	ON	**E425 E427 E429**	Change to OFF

DAIKIN

TECHNICAL INFORMATION

番号:----

DAIKIN INDUSTRIES LTD
AFTER SALES SERVICE DIV.

Subject	Alarm due to disconnection or insifficient connection of cable
Model	LXE10E-A, LXE10E-1, LXE10D

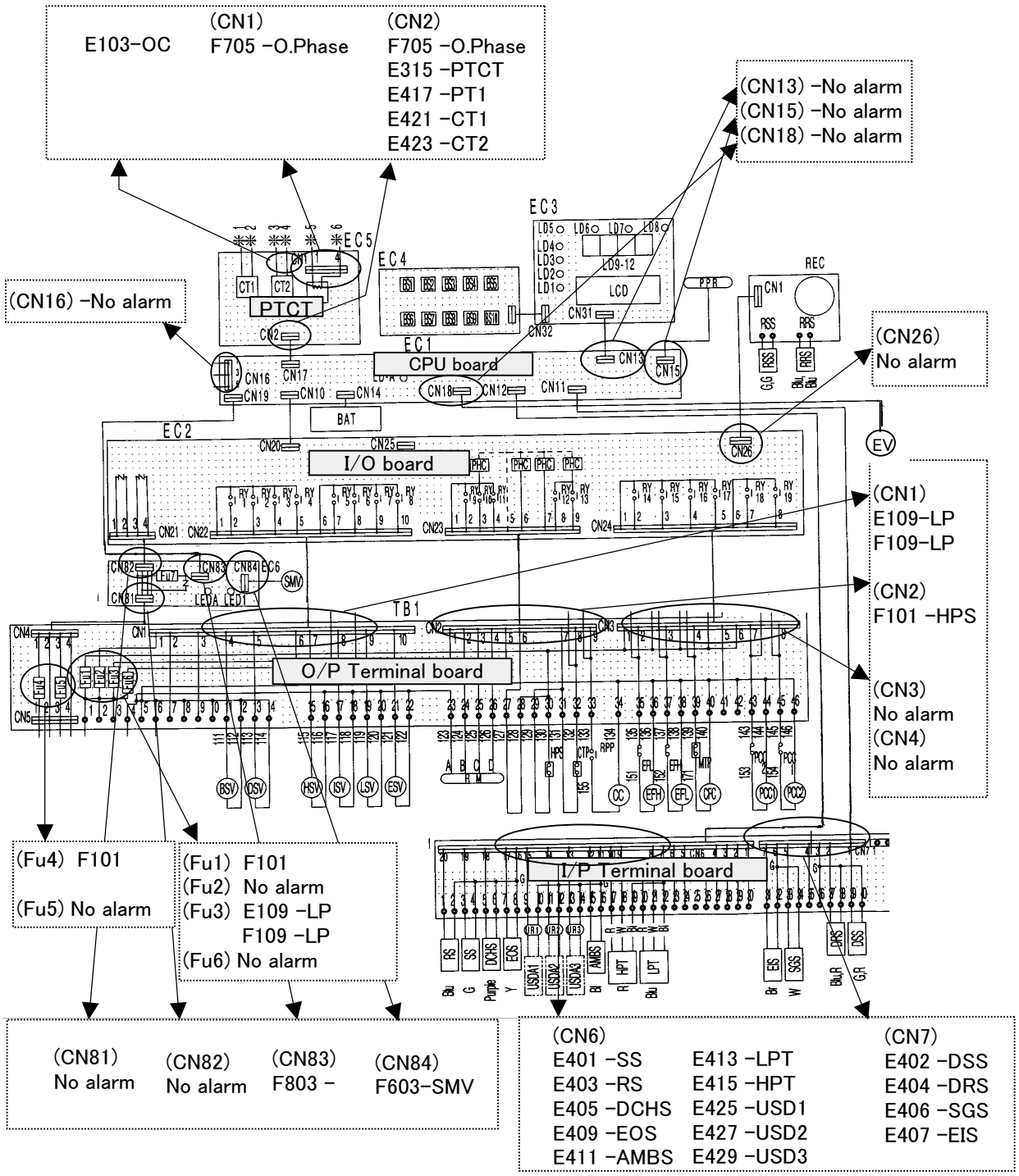

LXE10E DIAGNOSIS 故障診断

"02.9.23

Notes 1. Arrow shows the operation data changing compare to the nomal one.

2.Therefore it's recomendable to have taken a operation data of the normal unit in such a chance of PTI.

when ISV opens at abnormaly high DCHS temperature.

故障状況	Mulfunction	HPT	LPT	PT	CT1	CT2	AMBS	EIS	EOS	DCHS	SGS	SMV	EV	Alarm	Liquid Indicator
ガス欠	Refrigerant leakage	↘	↘	→	↘	↘	→	↘	↗	↗	↗ ↘		↗	E107	Flash
過充填	Over charged refrigerant	↗	↗	→	↗	↗	→	→	→	↗	→		↘	E101 F101	Seal
エアー混入	Air inserting	↗	↗	→	↗	↗	→	↗	↗	↗	↗ ↘		↘	E107 E101 E109	Flash
ﾄﾞﾗｲｱｰ詰り	Drier clogged	↘	↘	→	↘	↘	→	↘	↗	↗	↗ ↘		↗	E101 F109	Flash
EV詰り	EV clogged	↘	↘	→	↘	↘	→	↘	↗	↗ ↘	↗		↗	E109	Seal
ISV詰り	ISV clogged	↘	↘	→	↘	↘	→	→	→	↗	↗		→	E107	Seal
内ﾌｧﾝ停止	EFM stopped	↘	↘	→	↘	↘	→	↘	↘	↘	↘		↘		Seal
Comp.逆転	Comrpressor reversed	→	→	→	↗	↗	→							E103 E105	Flash
HSV,DSV 洩れ	HSV,DSV seat leakage	↘	↗	→	↘	↘	→	↘	→	→	→		↘		Flash
BSV洩れ	BSV seat leakage	↗	↗	→	↗	↗	→	→	→	↗	↗		→		Seal
ISV洩れ	ISV seat leakage	↗	↗	→	↗	↗	→	→	→	↘	↘		→		Flash
ESV洩れ (ﾌﾟﾙﾀﾞｳﾝ)	ESV seat leakage at pull down	↗	↗	→	↗	↗	→	→	→	↘	→		→		Seal

Solenoid Valves ON/OFF operation

'03.8.14

Solenoid valve	Frozen operation (−30.0℃≦SP≦−10,1℃)	Chilled / Partial frozen operation (−10,0℃≦SP≦+30.0℃)	Defrost / heating operation	Pump-down	Alarm Stop	Note
ESV (Economiser Sol. Valve)	**ON** when: RS≦5℃	**ON** when:RS≦5℃ during pull-down operation **OFF** during capacity control	**OFF**	**ON**	**OFF**	By using the ESV the cooling capacity will be much bigger.
BSV (By-pass Sol. Valve)	**ON** at start up when AMB≦10℃ or DCH≦AMB + 4℃, for quickly heat-up the oil temperature in the compressor and **OFF** when DCH > AMB + 4℃..	**ON** at start up same as in frozen operation **OFF** during capacity control. **ON** when SS>SP+0.5℃* 20 min. due to insufficient cooling capacity at high AMBS.	**OFF**	**OFF**	**OFF**	The BSV is used for quick heat-up the oil in the compressor at start-up when the ambient temperature is low. Also to return the oil to the compressor at capacity control, when the suction pressure is low.
LSV (Liquid Sol. Valve)	**ON** when the compressor is running and **OFF** when the compressor stops.	**ON**	**OFF**	**OFF**	**OFF**	
ISV (Injection Sol. Valve)	**ON** when RS≦0℃ and DCH≧120℃ or when RS >0℃ and DCH≧128℃. **OFF** when RS≦0℃ and DCH≦103℃ or when RS >0℃ and DCH≦118℃.	**ON** when DCHS≧113℃. **OFF** when DCHS≦108℃.	**ON** when LPT <40kPa. **OFF** when LPT >70kPa. **ON** when HPT <700kPa. **OFF** when HPT >800 kPa.	**OFF**		[Sinbol] SP: Set Point temperature SS: Supply air temperature Sensor RS: Reture air temperature Sensor AMB: Ambient air temperature DCH: Discharge gas temperature EOS: Evaporator Inlet gas temperature LPT: Low Pressure HPT: High Pressure
HSV (Hot gas Sol.	**OFF**	**OFF**	**ON**	**OFF**	**OFF**	
DSV (Defrost Sol. Valve)	**OFF**	**OFF** during capacity control. **ON** when SS<SP−0.5℃* 10 min. or SS<SP−0.2℃* 30 min. or LPT<−85kPa or LPT<35kPa*45 sec. due to insufficient heating capacity at low AMBS.	**ON**	**OFF**	**OFF**	
RSV (Re-heat Sol. Valve)	**OFF**	**ON** when the de-humidity value is set and the temperature is in-range. **OFF** when the temperature is out-range	**ON** when EOS>15℃.	**OFF**	**OFF**	The **RSV** will be switched **ON** during defrost, to clear the ice on re-heater, which might fall down from the evaporator.
EV (Expansion Valve)	**10 to 100%** open	**10 to 100%** open	**5%** open at defrost **0%** open at heating	Non controlling **10 to 100%** open	**50%** open	
SMV (Suction Modulation Valve)	**100%** open	**3 to 100%** open	**100%** open	**100%** open	**100%** open	

* Solenoid Valves are normally closed one-way stop valves.
* The coil of the solenoid valves are all the same.
* The body for ESV, ISV and BSV are the same, and the body for LSV, DSV, HSV, RSV are the same.

NOTE: When the EV coil have to be replaced, first connect the new EV coil on the body. After that connect electrically. Do a PTI test to check the EV on correct working.

DAIKIN

TECHNICAL INFORMATION

DAIKIN INDUSTRIES LTD
AFTER SALES SERVICE DIV.

Subject	**REPLACEMENT of HPT & LPT**
Model	**LXE10E-A, LXE10E-1,LXE10D, LXE10CA/10C**

	OLD	NEW (Since October 2004)
HPT	Type: SPCH01 Made by NIPPON DENSO Parts No. 0512659, 0797234 1463976	Type: NSK-BC030F-10105 Made by SAGINOMIYA Parts No. 1587959
LPT	Type: SPCL02 Made by NIPPON DENSO Parts No. 0512666, 0797241 1463983	Type: NSK-BC010F-10105 Made by SAGINOMIYA Parts No. 1587942

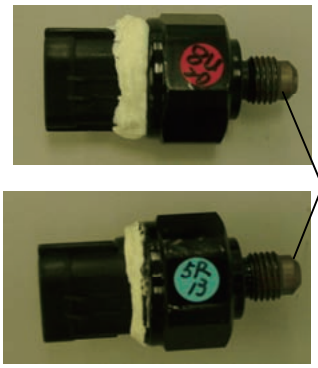

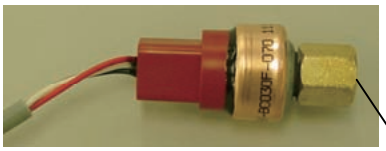

Male Screw
(U7/16)

Female Screw
U7/16

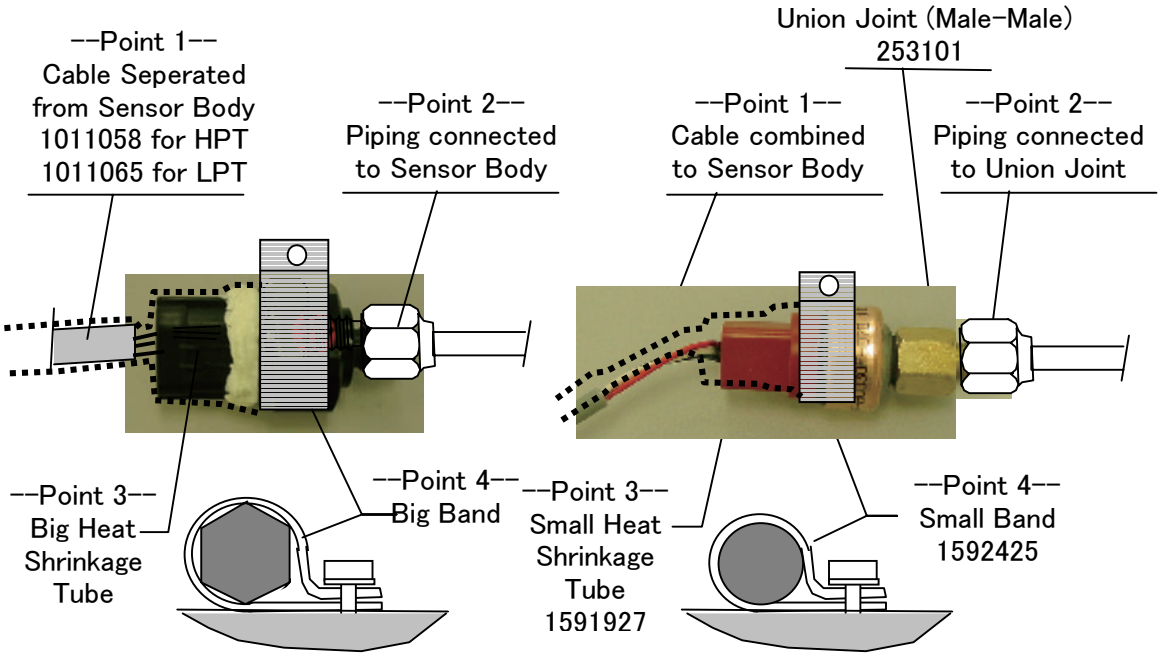

●REPLACEMENT of HPT/LPT from OLD to NEW

When OLD HPT/LPT is ordred, Daikin will deliver the alternative NEW HPT/LPT with following auxilialy 3 parts.

Union Joint (Male-Male)
253101

Clamp Band
1592425

Heat Shrinkage Tube
1591927

● CHARACTERISTICS ,Pressure kPa – Out Put V.,

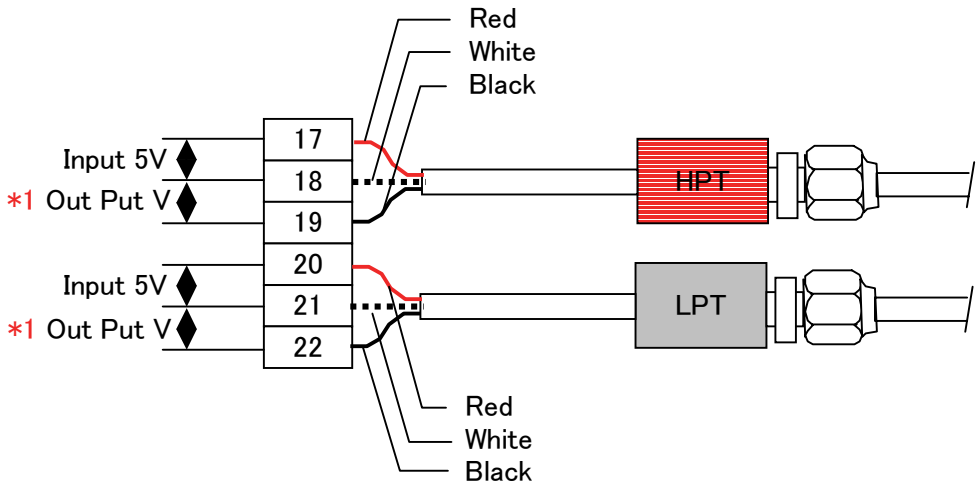

Note *1 Refer the characteristice table "Pressure kPa –Output Voltage V" sown in Service Manual.
*2. Both New & OLD HPT/LPT have common characteristics "Pressure kPa –Output Voltage V".

.

DCCS, Daikin Container Communication System

8

DCCS

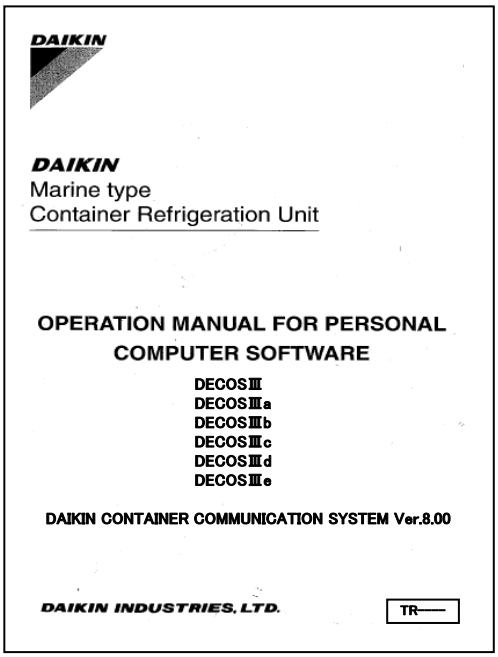

DAIKIN

DAIKIN
Marine type
Container Refrigeration Unit

OPERATION MANUAL FOR PERSONAL
COMPUTER SOFTWARE

DECOSⅢ
DECOSⅢa
DECOSⅢb
DECOSⅢc
DECOSⅢd
DECOSⅢe

DAIKIN CONTAINER COMMUNICATION SYSTEM Ver.8.00

DAIKIN INDUSTRIES, LTD.

TR——

FIELD JOB
Data down load

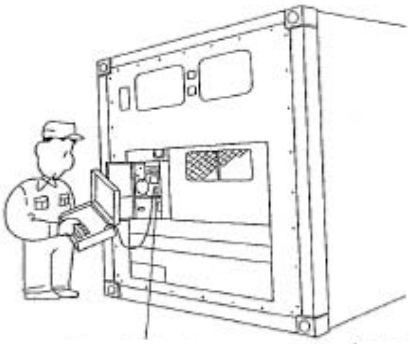

PC port receptacle
RS232C

PC port receptacle
3P or 5P

OFFICE JOB
Make a report

-5-

DCCS SOFTWARE CONFIGRATION

27th Sept.1999

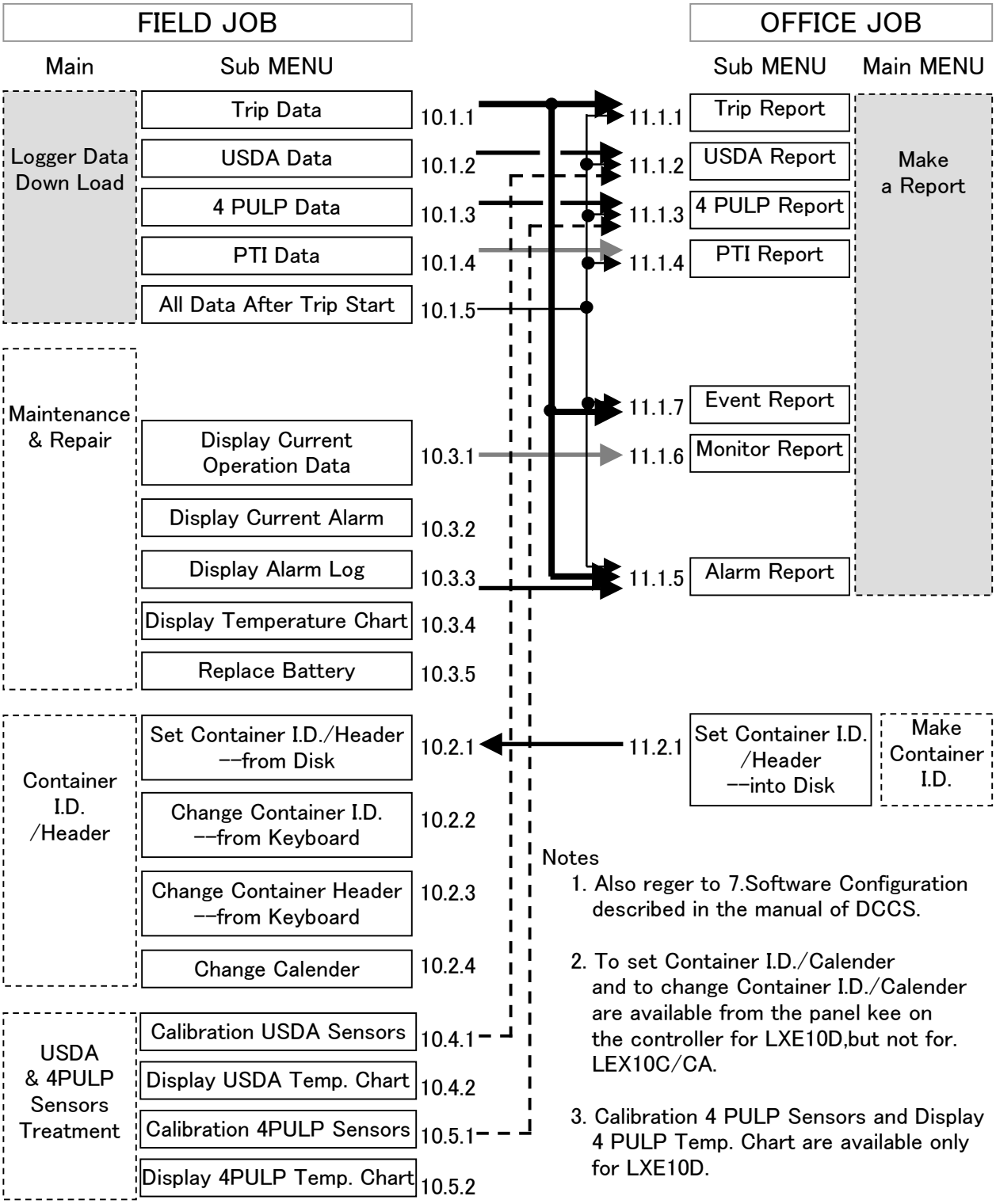

Notes

1. Also reger to 7.Software Configuration described in the manual of DCCS.

2. To set Container I.D./Calender and to change Container I.D./Calender are available from the panel kee on the controller for LXE10D,but not for. LEX10C/CA.

3. Calibration 4 PULP Sensors and Display 4 PULP Temp. Chart are available only for LXE10D.

DAIKIN

TECHNICAL INFORMATION

番号:---

DAIKIN INDUSTRIES LTD
AFTER SALES SERVICE DIV.

Subjec	**DCCS Preperation**
Model	**LXE10E100 or later, LXE10E-A, LXE10E-1, LXE10D, LXE10CA/C**

---- Preperation ----

① Personal computor

＊IBM-PC compatible models

＊OS:MS-Windows 3.1, MS-Windows 95 or upper

② DCCS Software

＊Ver. 8.0 is the latest version no. as of April 2009

＊The software can be available to down load from our Home Page.

'http://www.daikin.com/service

⇩

CONTAINER REFRIGERANTION UNIT

⇩

DOWNLOAD

⇩ ---------- I.D. and PASSWORD are requested

Download

> Daikin Container Communication System
> Latest Controller Software for LXE10E-A & LXE10D/10D-A

Downloa

Daikin Container Communication System

Click to Download

DCCS Ver8.00 Software	Download
DCCS Ver8.00 Manual(English)	Download
DCCS Ver8.00 Manual(Japanese)	Download

Click here
for down loading

③ Communication Cable ----between PC and Controller

④ Printer

DAIKIN

TECHNICAL INFORMATION

番号:---

DAIKIN INDUSTRIES LTD
AFTER SALES SERVICE DIV.

Subject	PC Cables for DCCS
Model	LXE10E100 or later, LXE10E-A, LXE10E-1, LXE10D, LXE10CA/C

1. Parts Number

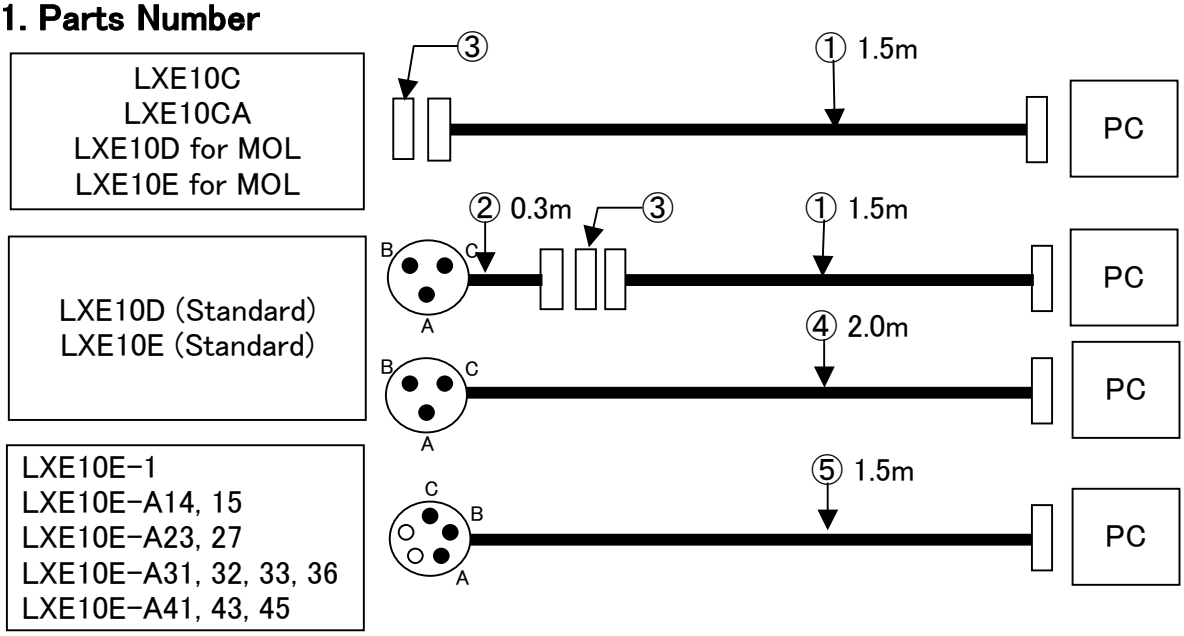

No.	Parts name	Parts Number	Description
①	Connection cable	Local supply	RS232C reverse (cross) type
②	Connection cable	9993324	
③	Adapter	Local supply	D-sub 9P, Male-Male
④	Connection cable	1087149	3 Pin
⑤	Connection cable	1384509	5 Pin

2. Internal Wiring

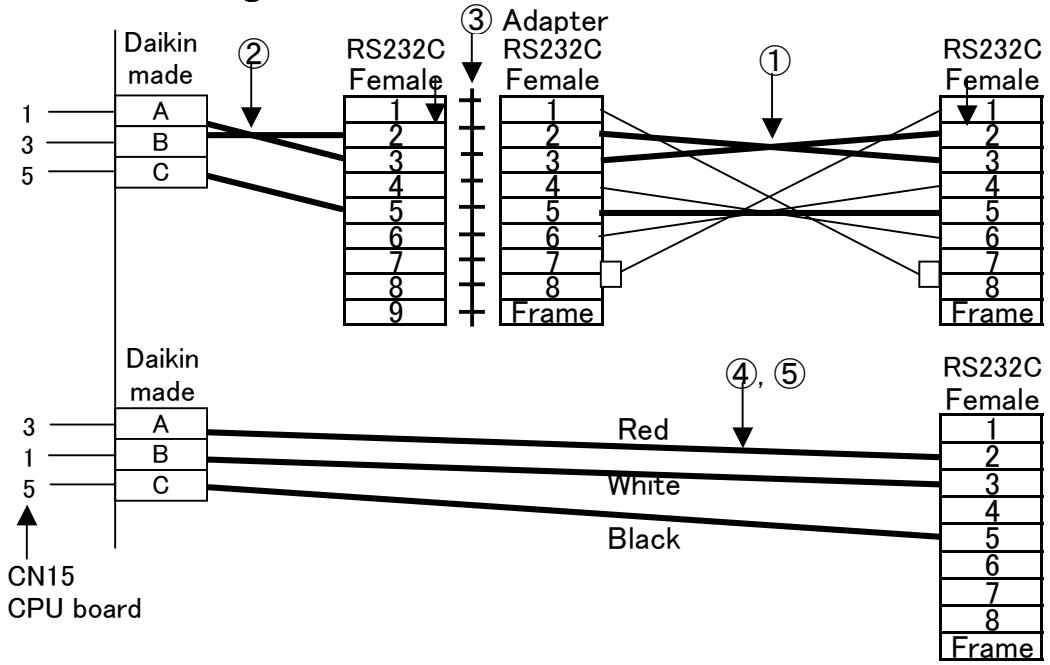

DAIKIN

TECHNICAL INFORMATION

DAIKIN INDUSTRIES LTD
AFTER SALES SERVICE DIV.

Subject	Introduction of new DCCS8.0
Model	LXE10E100 or later, LXE10E, LXE10D, LXE10CA/10C

Th function of DCCS8.0 is basically same as homer DCCS7.01.
However when DCCS8.0 is applied for new LXE10E100 or later equipped controller DECOS3e, following features can be executed.
Note. ( ) shows in the case of former DCCS7.01 or elder.

1 Quicker download : approx. 6 minute. (approx. 18 minute)
＊When DCCS8.0 is applied for former models, the speed is approx. 12 minute.
2 Longer download period for TRIP REPORT and USDA REPORT
after power OFF : 5 days/ 120 hrs (3 days/ 72 hrs for Limited customers only)
3 PTI REPORT downloaded : 6 reports (2 reports)

＊DCCS8.0 can be performed both for LXE10E100 or later and former models.
Contrary the former DCCS7.01 can not be performed for LXE10E100 or later.

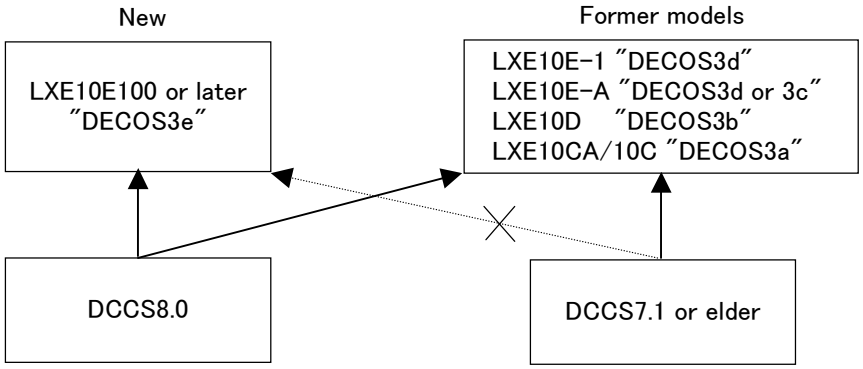

Subject	Introduction of new DCCS7.01	1/4
Model	LXE10E, LXE10D, LXE10CA/10C	

DCCS7.01 has several advantages compare to the previous version 6.06 or elder.
Some advantages are described as bellow as example.
For more details, refer to operation manual TR07-10 for DCCS7.01.

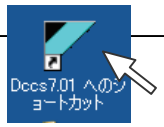

Click

1. Quick entrance to
FIELD JOB
or OFFICE JOB
or CONFIGURE SET
can be quickly selected in the next display after clicking on a link DCCS7.01.

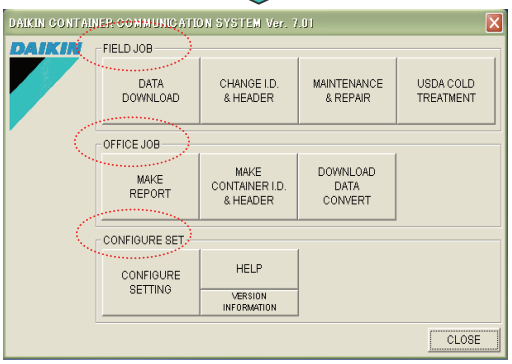

2. CONFIGURE SET

. DOWNLOADed DATA is directly stored in the specified C drive.

C:\ DEFAULT-DOWNLOAD

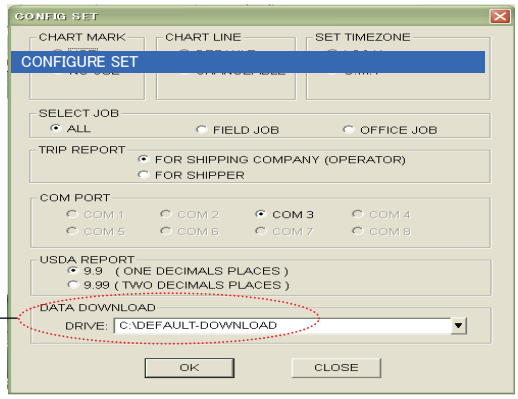

Container I.D, download date and the file extention are automatically packed as one file.

one file

DILU1234567_YYMMDDA.D5D

DILU1234567_YYMMDDB.D5D

DILU2345678_YYMMDDA.D5D

Container I.D Download date

A,B,C…: Additional character for preventing overwriting

File extention

3 FIELD JOB

3.1 DATA DOWN LOAD

You can download the data among 4 SELECT TERMs with different download period.

〈 4 SELECT TERM 〉
1. ALL TERM (FULL TRIP)
2. LAST ONE TRIP
3. BY DATE
4. BY TRIP

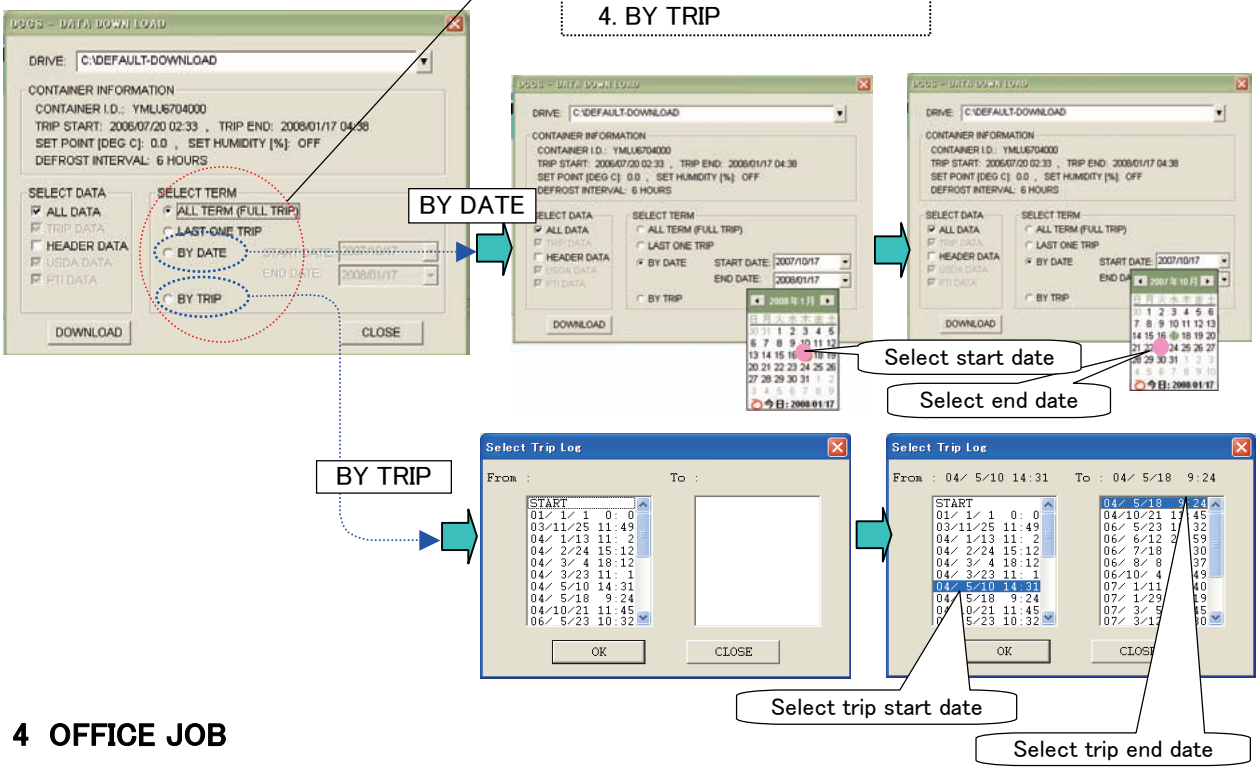

4 OFFICE JOB

4.1 More flexible TRIP REPORT

In CUSTOM mode, you can choose the sensors that you want to report.

〈 Exsample A 〉
Selecting all sensors

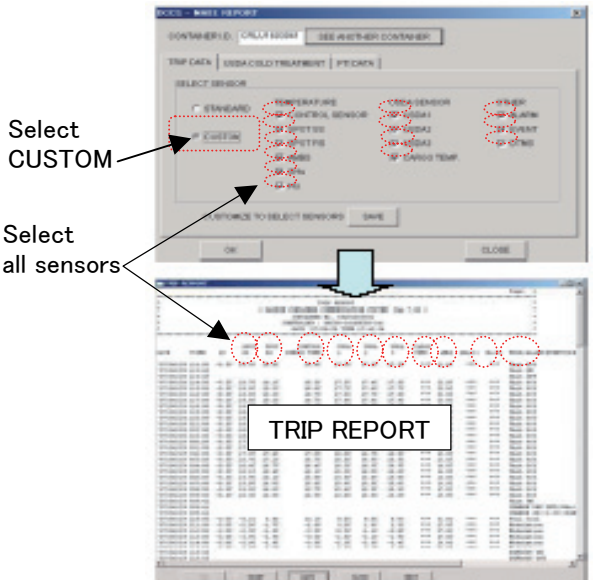

〈 Exsample B 〉
Selecting "Control sensor" and "Event"

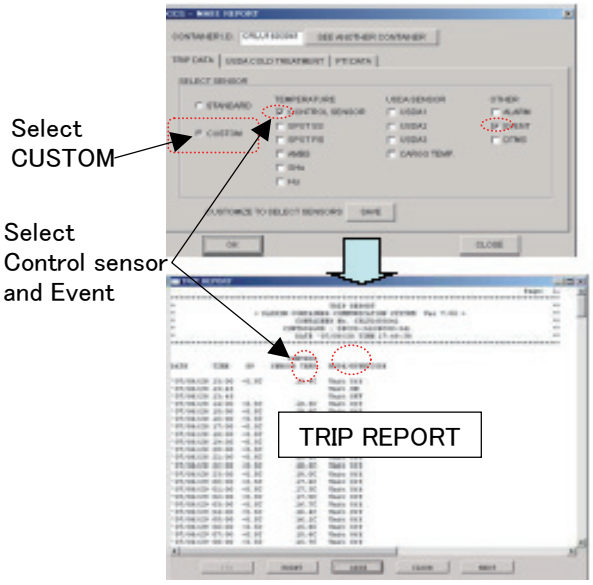

5 MAINTENANCE & REPAIR

〈 5 selectable ITEMS 〉
5.2.1 DISPLAY CURRENT OPERATING LOG
5.2.2 DISPLAY ALARM LOG
5.2.3 DISPLAY TEMP. CHART
5.2.4 REPLACE BATTERY
5.2.5 DISPLAY CONTROLLER SETTING

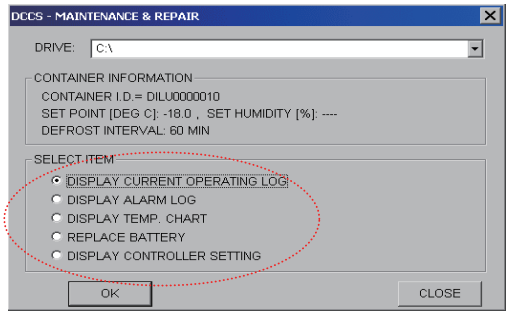

5.1 DISPLAY CURRENT OPERATION LOG

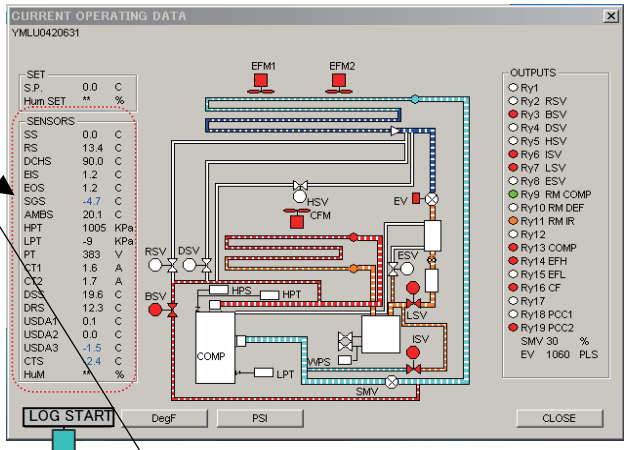

Operation data

Click "LOG START"
and choise "1 minute" or "5 seconds".
Then all operation data are downloaded
every 1minute or **5seconds** into your computar.

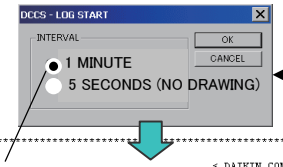

Click "LOG START"

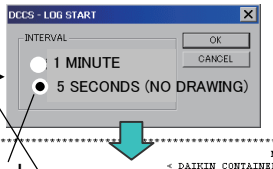

every 1minute

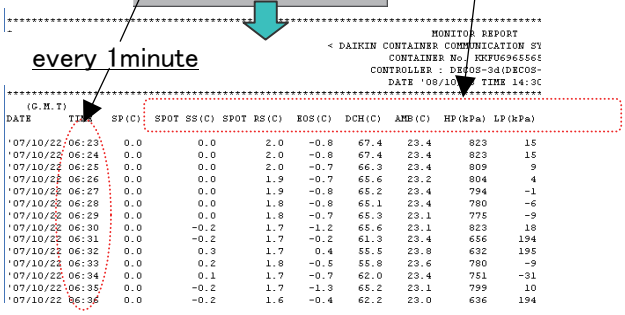

every 5seconds

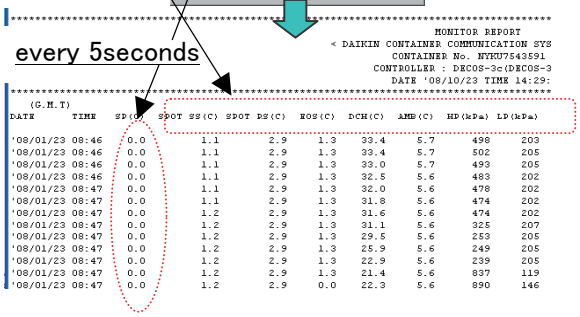

5.2 DISPLAY ALARM LOG

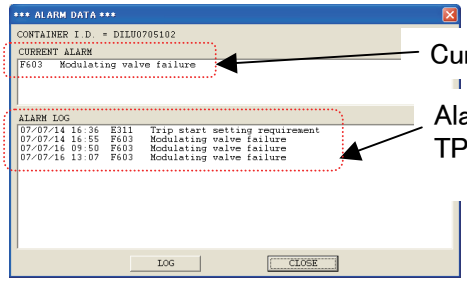

Current Alarm

Alarms after TPIP START

5.3 DISPLAY CONTROLLER SETTING

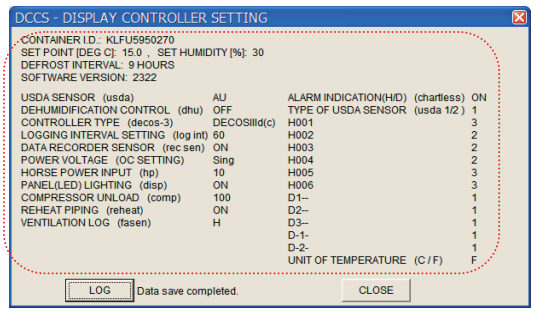

The controller setting information and software version number are displayed as shown above.
Check the setting information first when the controller malfunction is diagnosed.

6 Sending the data by e-mail

Attach the file as it is transmissioning the data by e-mail.

＊In case of the former DCCS 6.05 or elder, two files or more must be attached individually or contained in a folder and attached as a compressed folder.

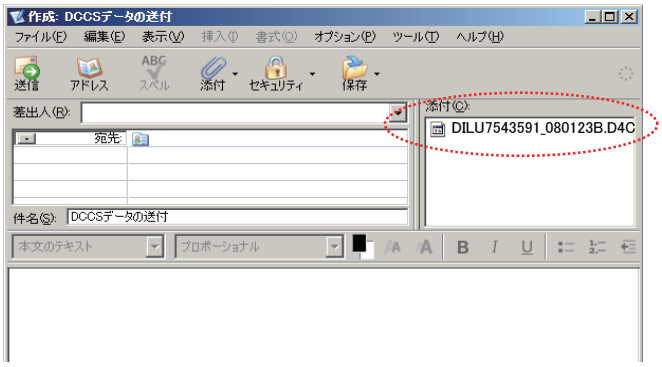

Chapter 9 is applicable only for unit with dual condensers of air cooled and water cooled type.

The model name of the unit with dual condensers is below as it is
on August 2009.

* LXE10E-1

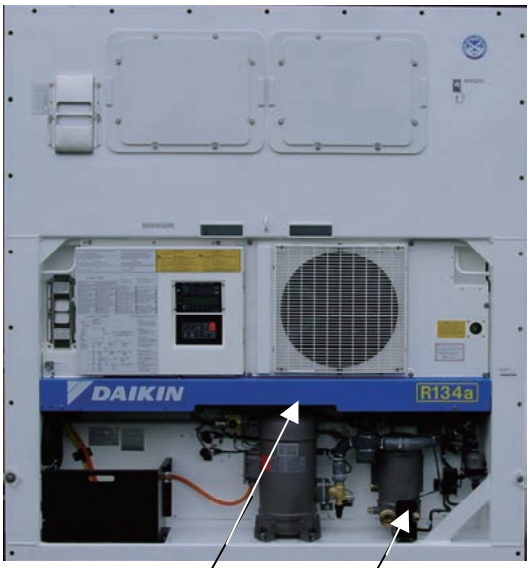

Air cooled condenser

Water cooled condenser

9

Major differences between dual condensers type and single condeser type, air cooled one.

( ) shows for air cooled type only unit

1. Water cooled operation is available. (Air cooled operation only)
   * With water cooled condenser
   * With safety devices WPS and CBS
2. R134a charged amount ----Refer to chapter 4.
3. Scroll compressor with manual stop valves on suction and discharge.
   (No manual stop valves)
4. Thermostatic exp. valve equiped on economizer circuit (Capillary tube)
6. Liquid/moisture indicator located inside valve chamber (inside comp. chamber)
7. Heating operation first and Cooling operation later for emergency operation for LXE10E-1 & LXE10E101A2
   (Either heating operation or cooling operation first)
8. Controller setting for LXE10E-1 & LXE10E101A
   USDA"AU" ("3","4" or "OFF"), FASEN"L" ("OFF" or "H"), C/F"F" ("C")

LXE10E-1 "INITIAL SETTING PROCEDURE for Spare Controller DECOS3d"

Key Operation

1. Underlined figures show the value of the most usual case. Actually all the setting have been factory-set by following INITIAL SETTING TABLE for Spare Controller DECOS3d. If there is not specify special instruction, set all figures to the "Factory Set".
2. When the setting change is required, select the desired setting using UP or DOWN key, and press ENTER key to confirm, and then turn circuit breaker OFF.
3. When controller is replaced from the spare parts, confirm the **MODEL NAME** first, and then set each item by following the **INITIAL SETTING TABLE**.

:Select key
:S key
:Enter key
:Man action
:Controller operation

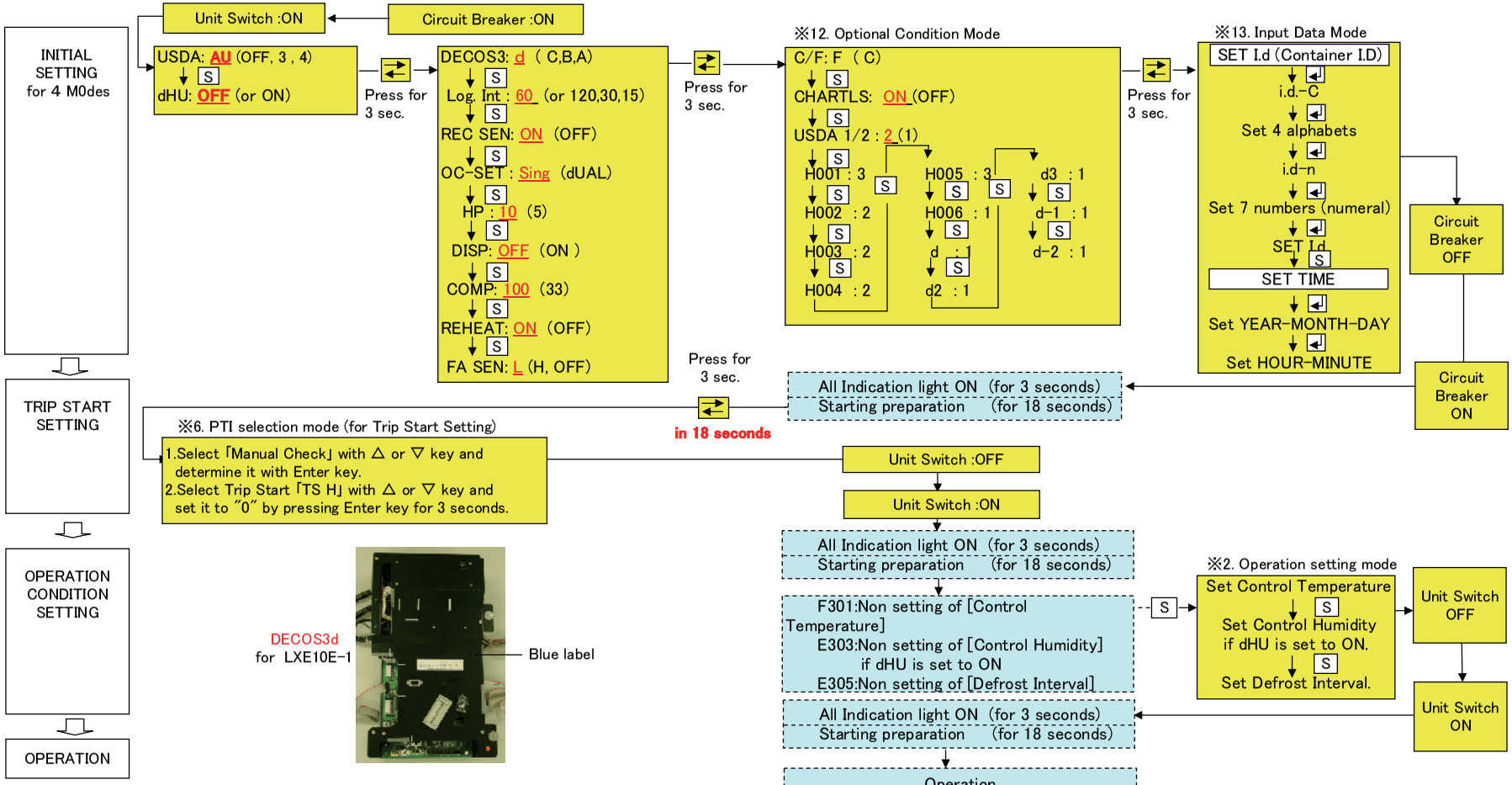

LXE10E-1 INITIAL SETTING TABLE for SPARE CONTROLLER DECOS3d

MODEL NAME	※10.Optional fun.		※11. Basic Function Mode									※12. Optional Condition Mode														※13.Input Data	
	USdA	dHu	DECOS	LOG	REC	OC-	HP	dISP	COM	REHEA	FASE	C/F	CHART	USdA1/	H001	H002	H003	H004	H005	H006	D1--	D2--	D3--	D-1-	D-2-	SET ID	SET
LXE10E-1 LXE10E-1A LXE10E-1B LXE10E-1C LXE10E-1D LXE10E-1E	AU	OFF	d	60	ON	Sing	10	OFF	100	ON	L	F	ON	2	3	2	2	1	3	1	1	1	1	1	1	*	GMT

Subject	COMPRESSOR CHAMBER	2
Model	LXE10E101A, 102A, LXE10E-1	

● LXE10E101A, 102A
LXE10E-1, 1A

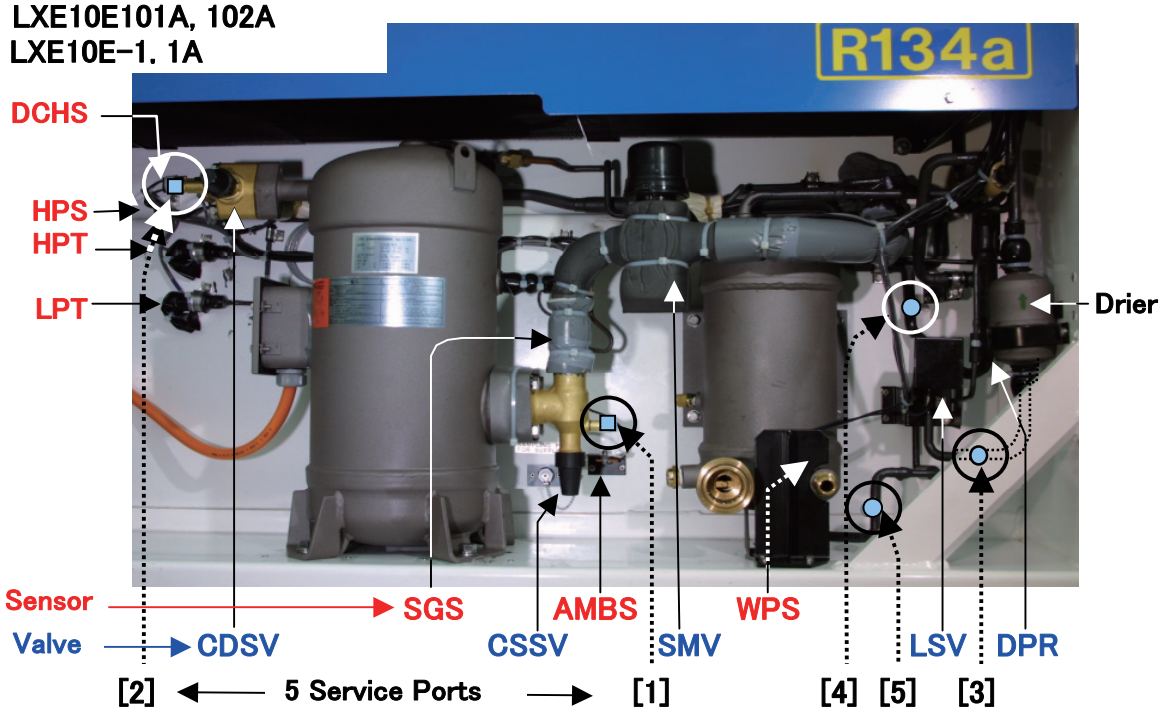

● LXE10E-1B, 1C, 1D, 1E

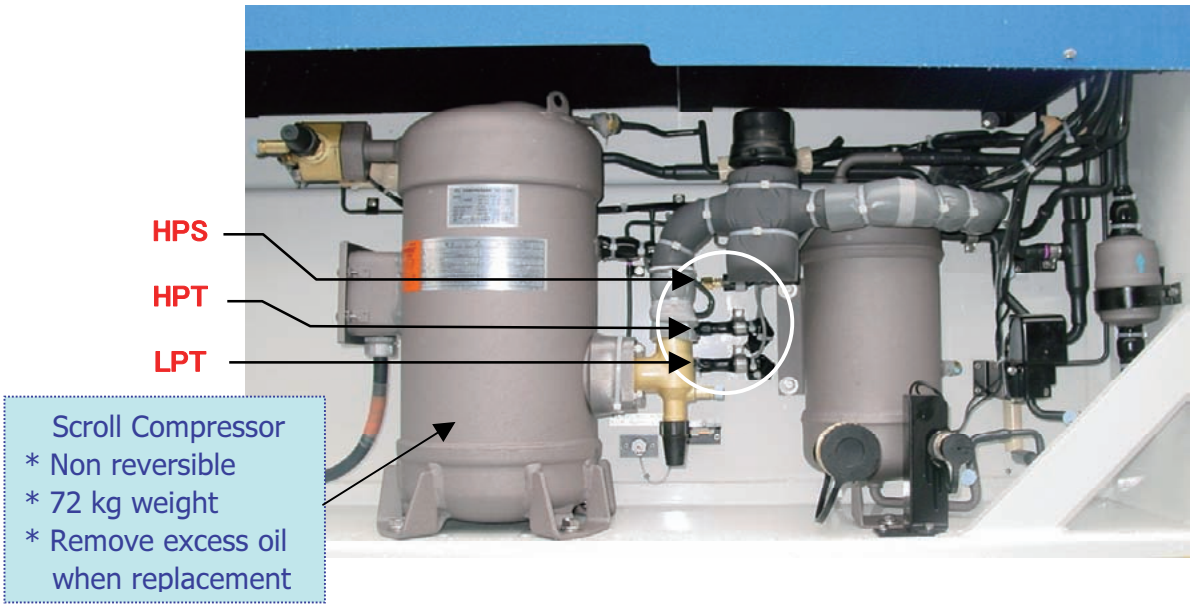

[Sensor]	[Valve]
AMBS: AMBient air temp. Sensor	CDSV: Compressor Discharge Stop Valve
DCHS: DisCharge gas temp. Sensor	CSSV: Compressor Suction Stop Valve
HPS: High Pressure Switch	DPR: Discharge Pressure Regulator
HPT: High Pressure Transducer	LSV: Liquid Solenoid Valve
LPT: Low Pressure Transducer	SMV: Suction Modulation Valve
SGS: Suction Gas temp. Sensor	
WPS: Water Pressure Sensor	

DAIKIN

TECHNICAL INFORMATION

番号:----

DAIKIN INDUSTRIES LTD
AFTER SALES SERVICE DIV.

Subject	VALVE CHAMBER	2
Model	LXE10E101A, 102A, LXE10E-1	

● LXE10E101A, 102A
LXE10E-1B
LXE10E-1C
LXE10E-1D
LXE10E-1E

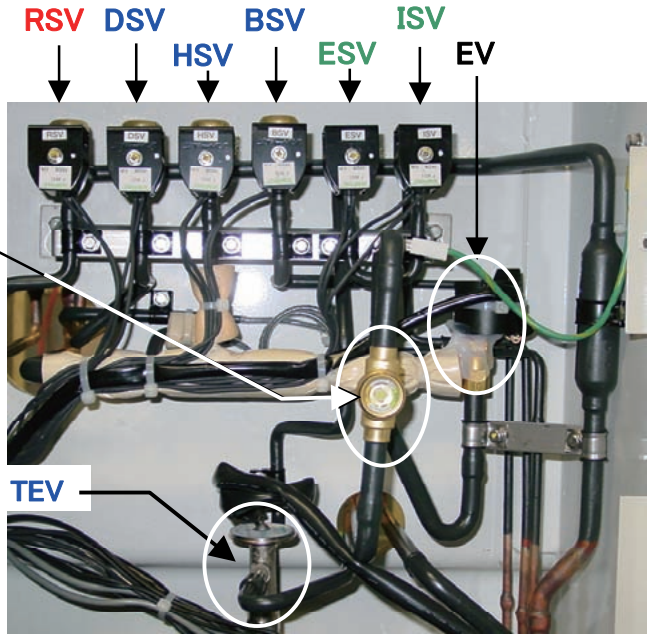

	Body	Coil
LSV BSV HSV DSV RSV	3/8" 2 way 09454566	0955287
ISV ESV	1/4" 2 way 0088738	

● LXE10E-1
LXE10E-1A

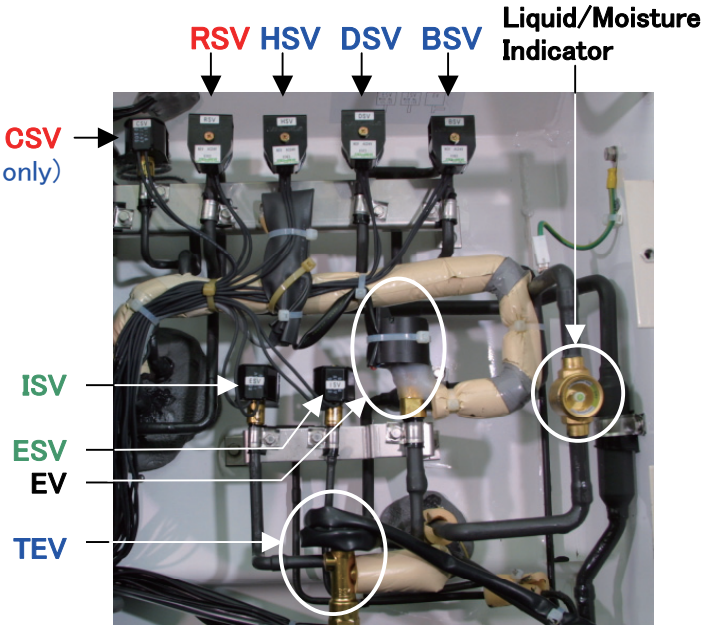

BSV: Bypass Solenoid Valve
CSV: Capillary Solenoid Valve
DSV: Defrost Solenoid Valve
EV: Electronic Expansion Valve
ESV: Economizer Solenoid Valve
ISV: Injection Solenoid Valve
RSV: Reheater Solenoid Valve
TEV: Thermostatic Expansion Valve

DAIKIN

TECHNICAL INFORMATION

番号:----
DAIKIN INDUSTRIES LTD
AFTER SALES SERVICE DIV.

Subject	Wiring Diagram	3
Model	LXE10E101A, 102A	

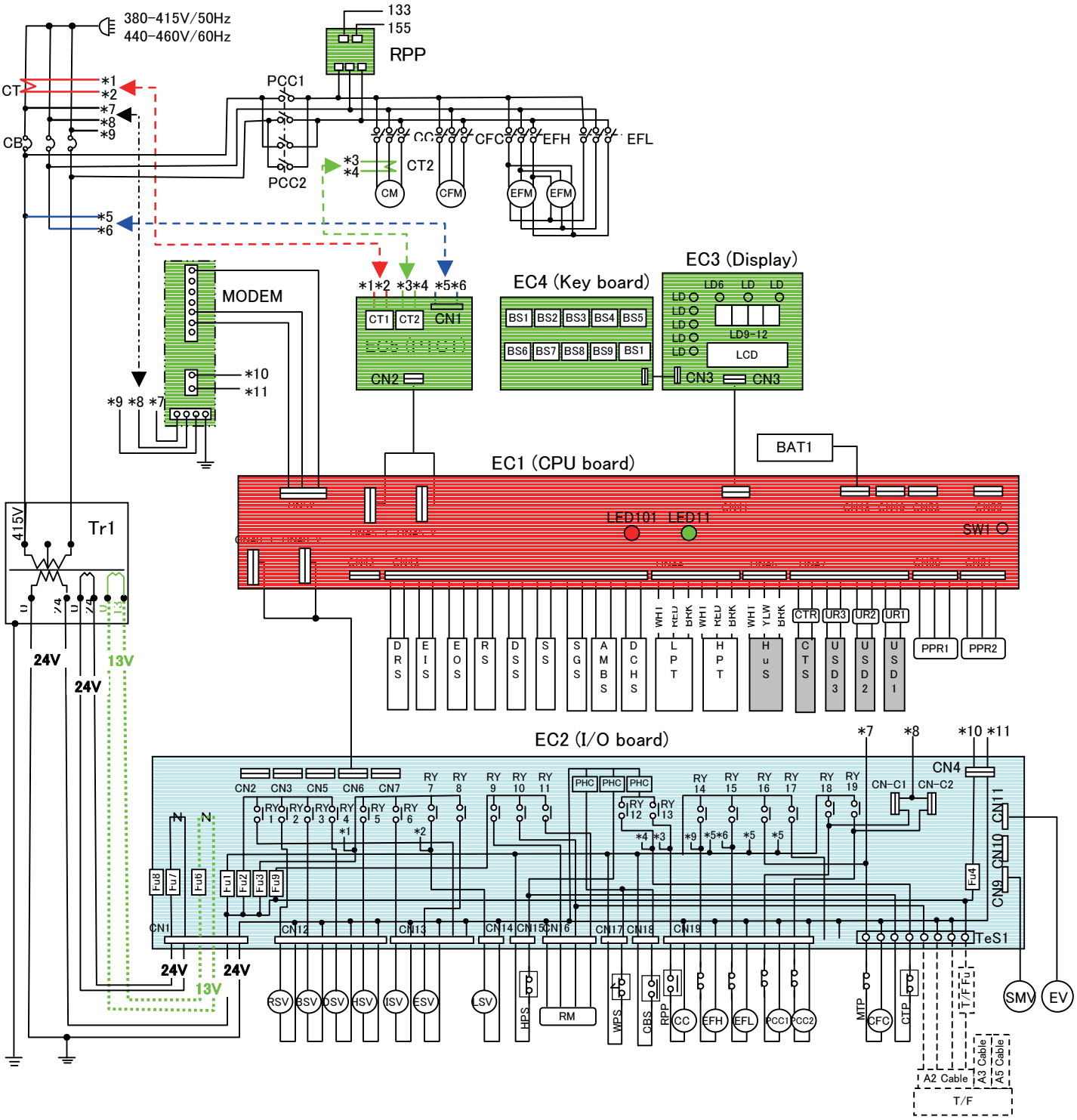

Subject	Wiring Diagram (Connector type terminal board)	3
Model	LXE10E-1E	

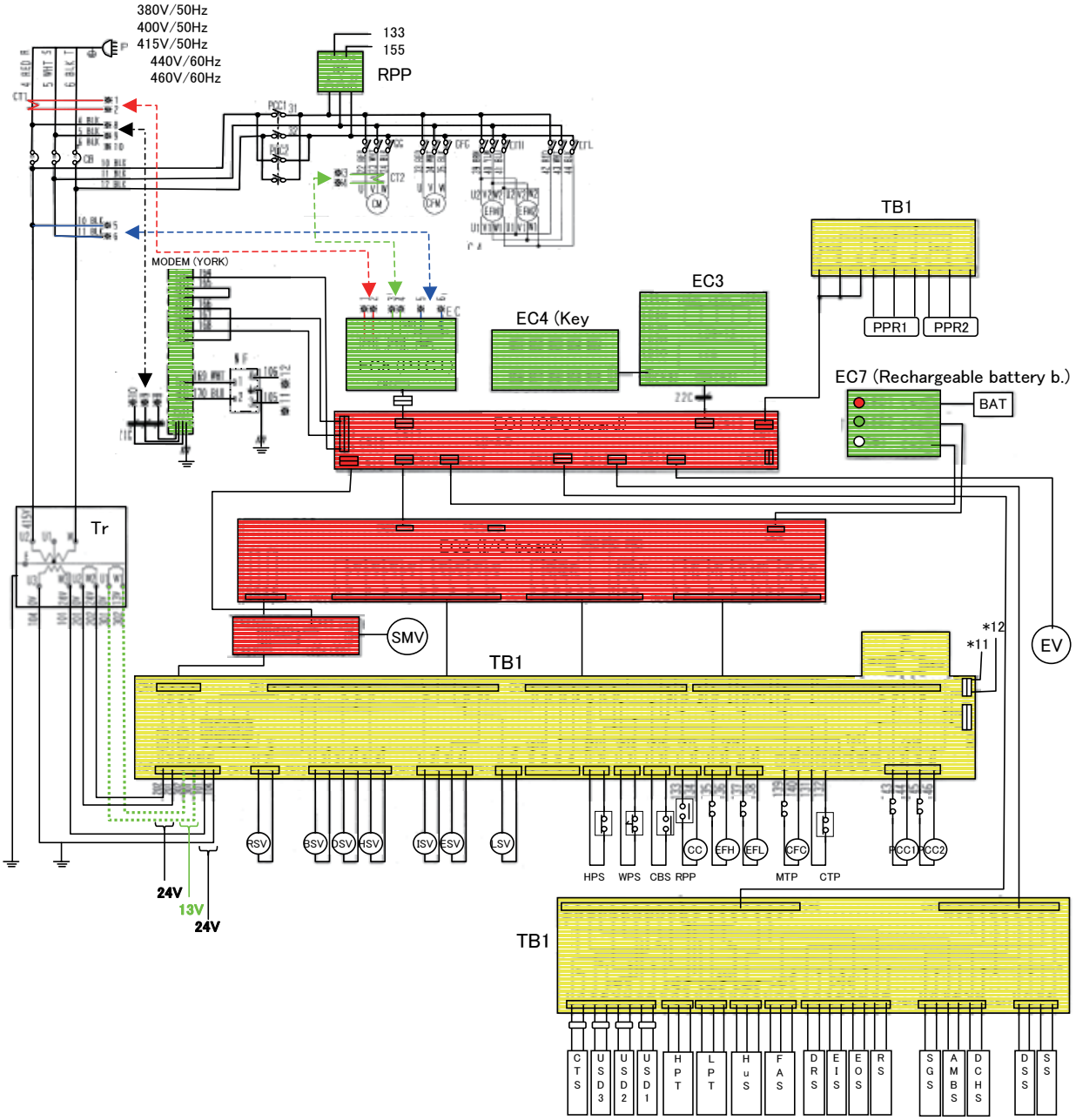

DAIKIN

TECHNICAL INFORMATION

番号:----
DAIKIN INDUSTRIES LTD
AFTER SALES SERVICE DIV.

Subject	Wiring Diagram (Screw type terminal board)	3
Model	LXE10E-1, 1A, 1B, 1C, 1D	

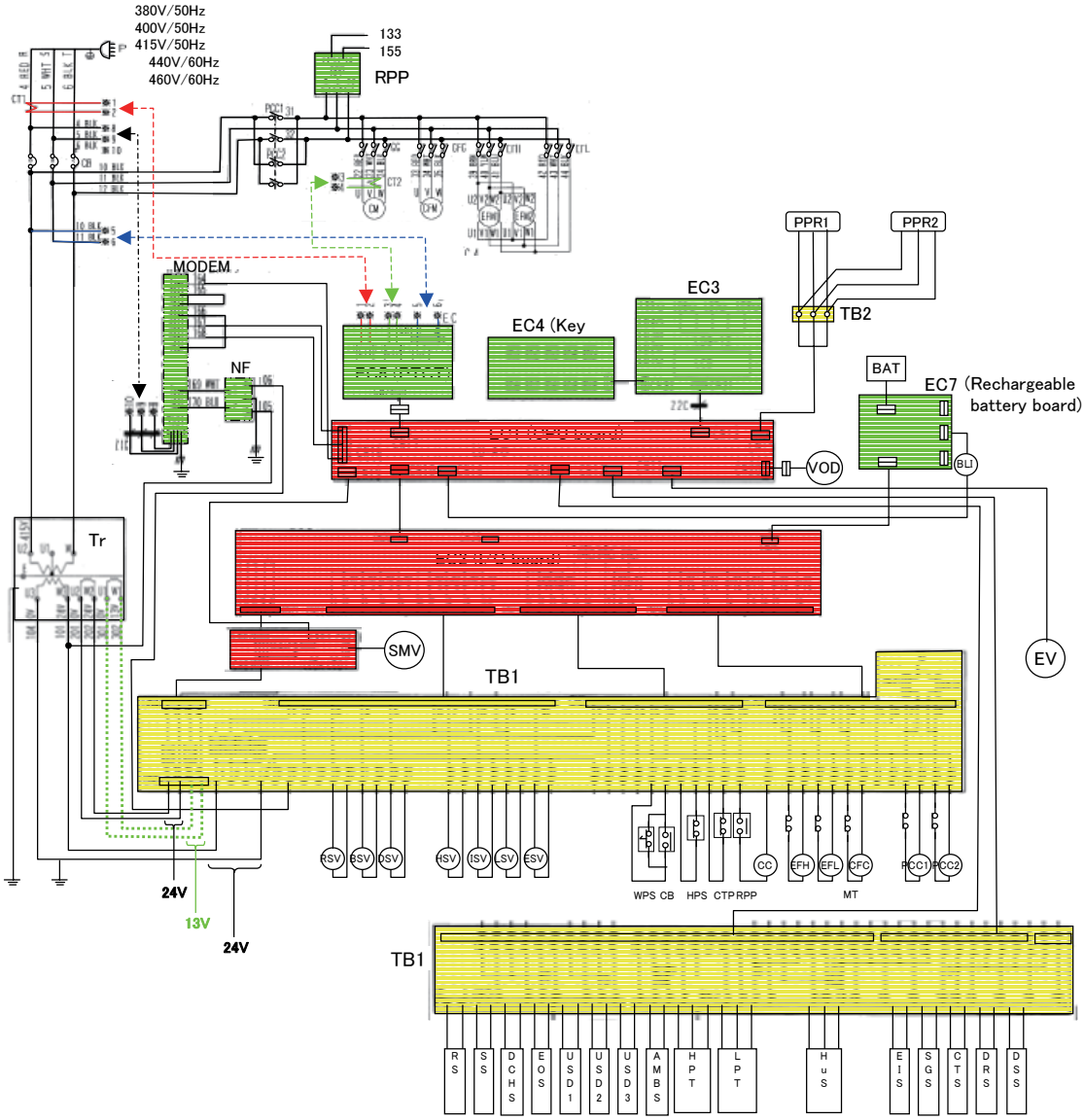

DAIKIN

TECHNICAL INFORMATION

番号:----

DAIKIN INDUSTRIES LTD
AFTER SALES SERVICE DIV.

Subject	The protected circuit by fuse 1,2,3 or 9
Model	LXE10E101A, 102A

3

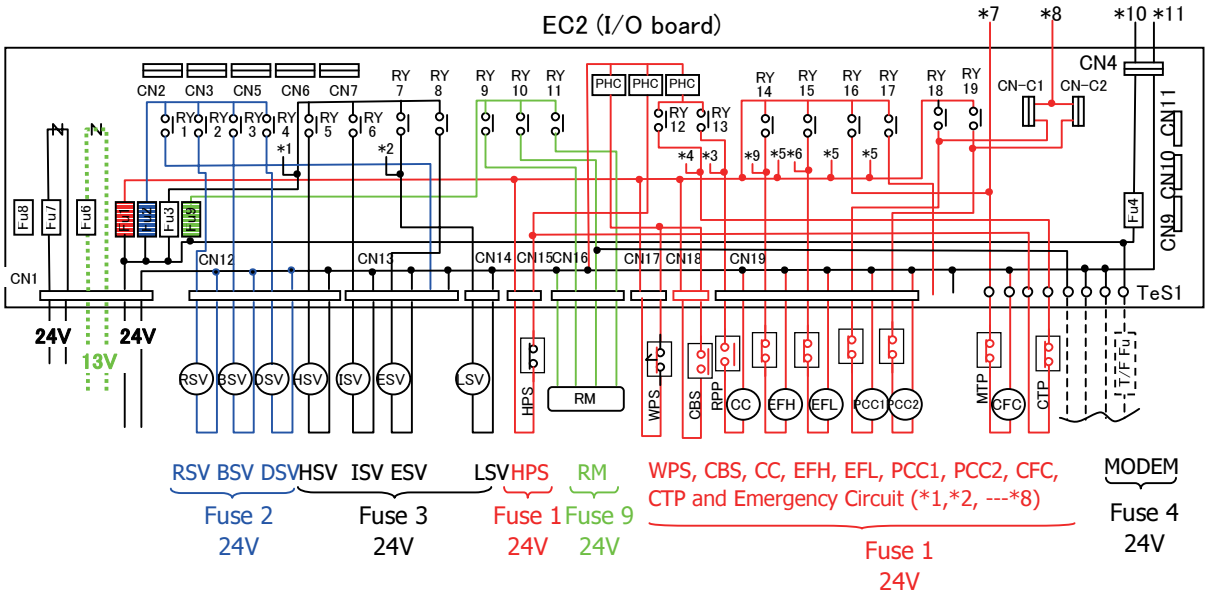

RSV BSV DSV HSV ISV ESV LSV HPS RM

Fuse 2 24V

Fuse 3 24V

Fuse 1 24V

Fuse 9 24V

WPS, CBS, CC, EFH, EFL, PCC1, PCC2, CFC, CTP and Emergency Circuit (*1,*2, ---*8)

Fuse 1 24V

MODEM

Fuse 4 24V

DAIKIN

TECHNICAL INFORMATION

番号:----

DAIKIN INDUSTRIES LTD
AFTER SALES SERVICE DIV.

Subject	The protected circuit by fuse 1,2,3 or 6	3
Model	LXE10E-1	

● Screw type terminal board TB1 (LXE10E-1, 1A, 1B, 1C, 1D)

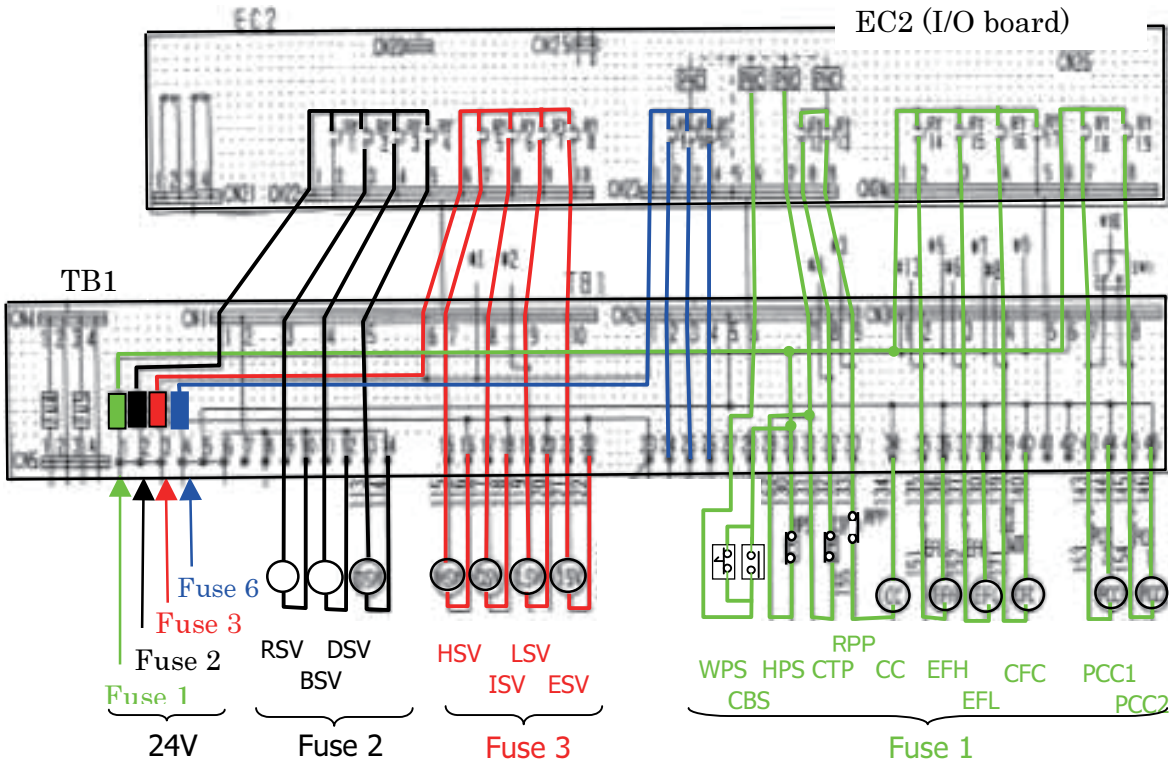

● Connector type terminal board TB1 (LXE10E-1E)

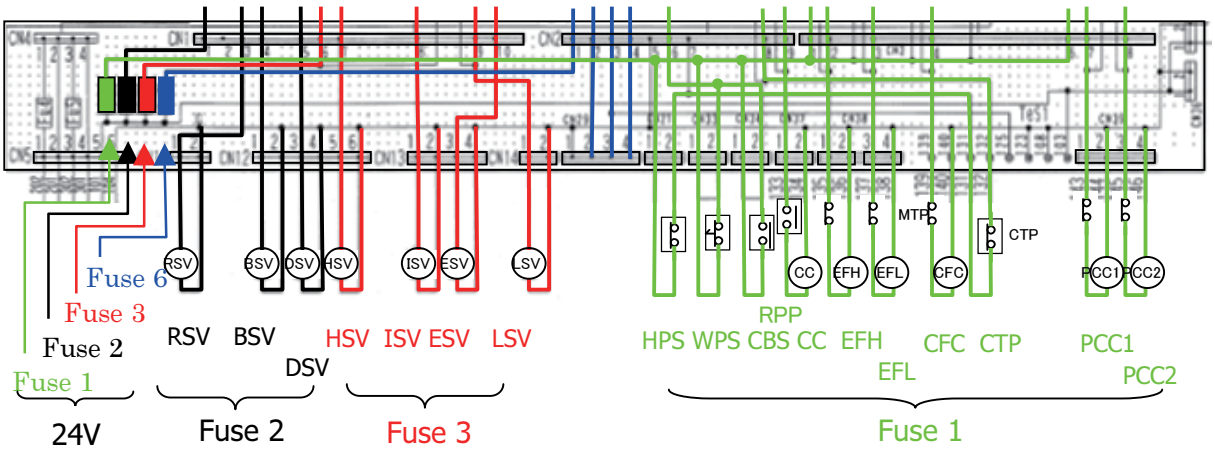

DAIKIN

TECHNICAL INFORMATION

DAIKIN INDUSTRIES LTD
AFTER SALES SERVICE DIV.

Subject	Piping Diagram ; DEHUMIDIFICATION OPERATION	4
Model	LXE10E101A, LXE10E102A, LXE10E-1	

High Pressure Vapor
High Pressure Liquid
Energized valve coil/fan motor
Low Pressure Vapor
Low Pressure Liquid/Vapor

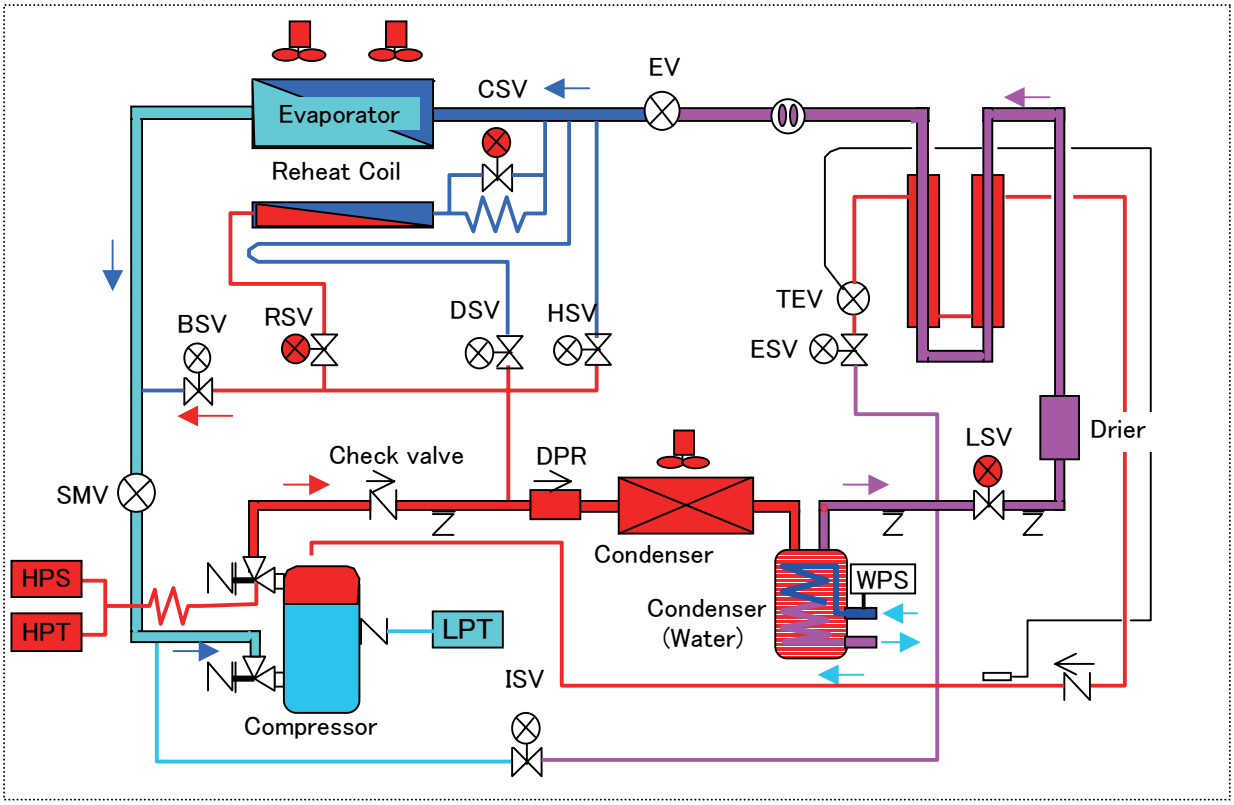

*The dehumidification control is performed only during "chilled operation" in the capacity control.
I.e when the control temperaturer goes to out of range, the dehumidification control is turned off by turning RSV and CSV off.

DAIKIN

TECHNICAL INFORMATION

DAIKIN INDUSTRIES LTD
AFTER SALES SERVICE DIV.

Subject	Frozen & Pull-down Operation
Model	LXE10E100 or later, LXE10E-A, LXE10E-1

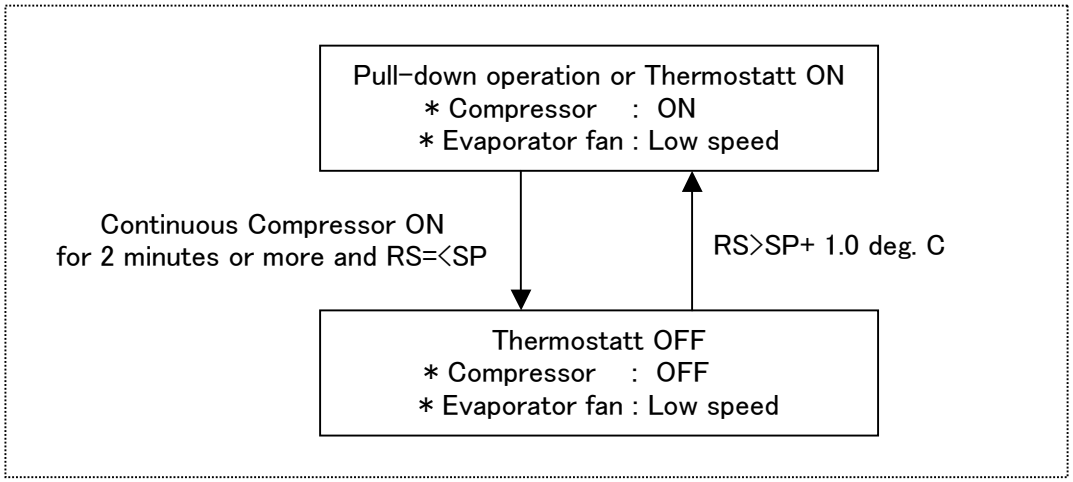

Components			Pull-down	Thermostat OFF
Motor	Compressor	CC	ON	OFF
	Evaporator fan,High speed	EFH	OFF	OFF
	Evaporator fan,Low speed	EFL	ON	ON
	Condenser fan	CF	ON/OFF ＊1	OFF
Solenoid valve	Liquid solenoid valve	LSV	ON	OFF
	Economizer solenoid valve	ESV	ON	OFF
	Injection solenoid valve	ISV	ON/OFF ＊2	OFF
	Hot-gas solenoid valve	HSV	OFF	OFF
	Defrost solenoid valve	DSV	OFF	OFF
	By-pass solenoid valve	BSV	OFF	OFF
	Reheat sonenoid valve	RSV	ON/OFF ＊3	OFF
Suction modulation valve		SMV	100%	100%
Electronic expansion valve		EV ＊4	200 to 2000pls	100pls
		EV ＊5	48 to 420pls	0pls

＊1 High pressure control
＊2 Injection control
＊3 RSV : OFF ≦RS 20 ℃, RSV : ON ≧RS 25 ℃
＊4 EV (2000pls/100%) for LXE10E-A
＊5 EV (420pls/100%) for LXE10E100 or later

DAIKIN

TECHNICAL INFORMATION

DAIKIN INDUSTRIES LTD
AFTER SALES SERVICE DIV.

Subject	Piping Diagram ; CHILLED OPERATION in Capacity control	4
Model	LXE10E101A, LXE10E102A, LXE10E-1	

High Pressure Vapor
High Pressure Liquid
Energized valve coil/fan motor
Low Pressure Vapor
Low Pressure Liquid/Vapor

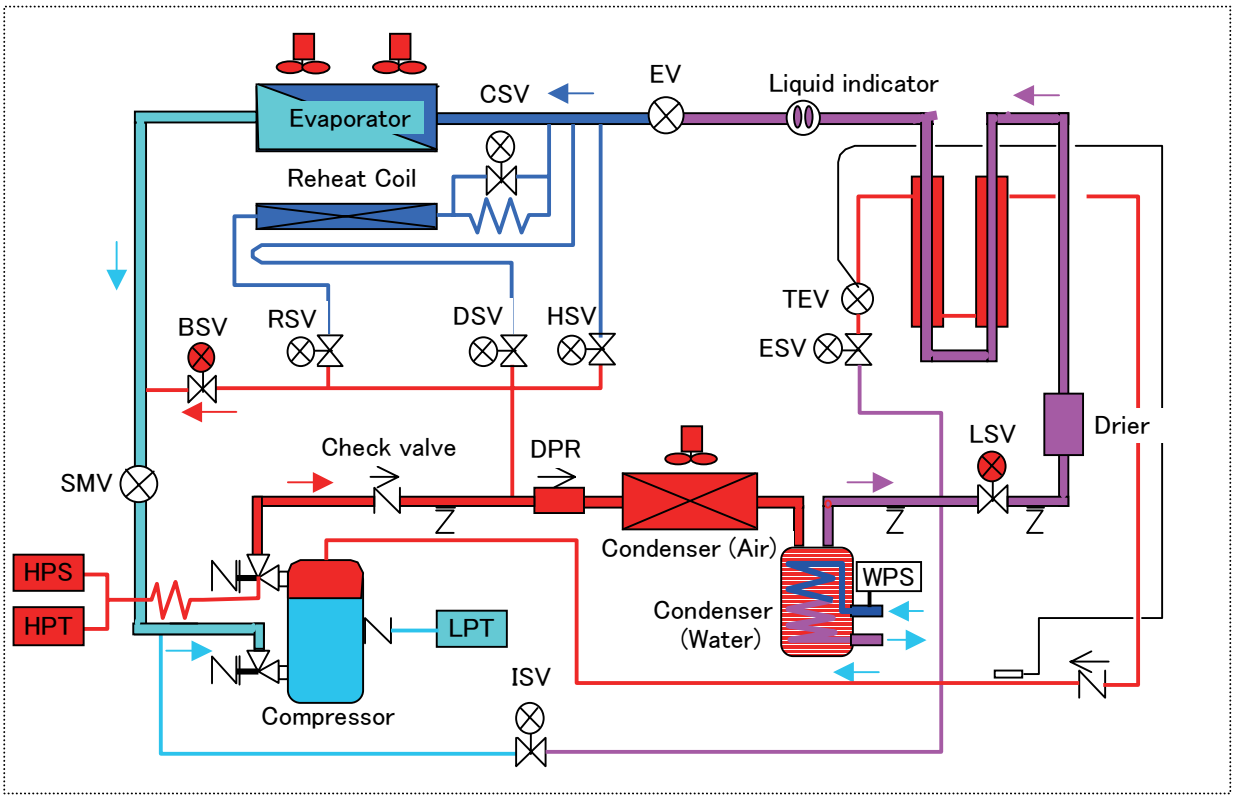

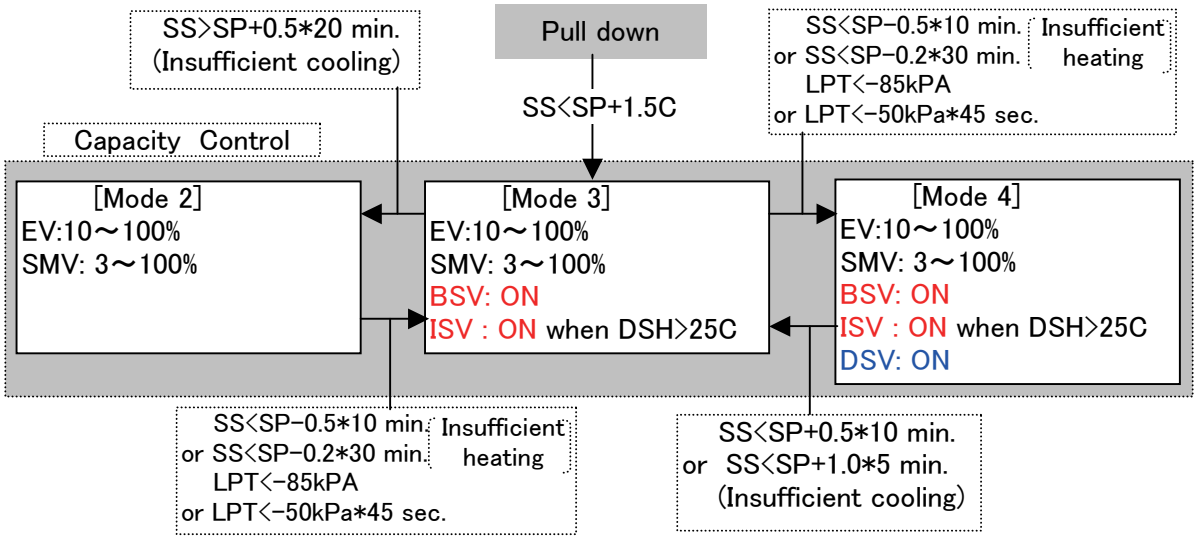

DAIKIN

TECHNICAL INFORMATION

DAIKIN INDUSTRIES LTD
AFTER SALES SERVICE DIV.

Subject	Chilled and Partial Frozen Operation
Model	LXE10E100 or later, LXE10E-A, LXE10E-1

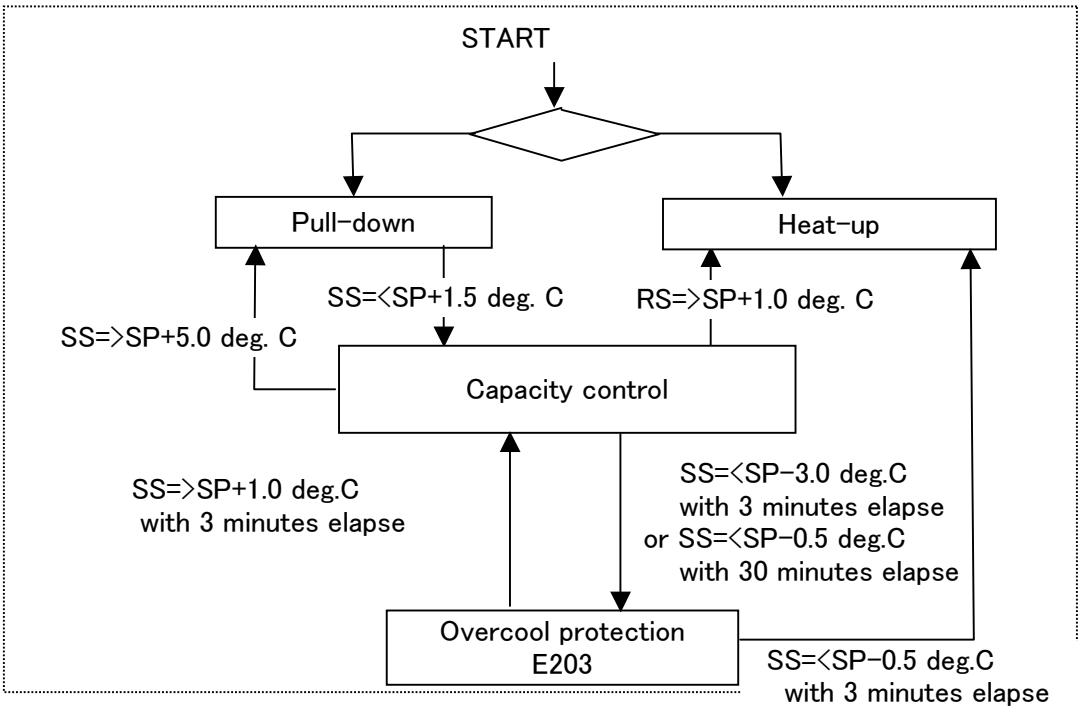

Components			Pull-down	Capacity control	Heat-up	Overcool protection
Motor	Compressor	CC	ON	ON	ON	OFF
	Evaporator fan,High speed	EFH	ON	ON	ON	ON
	Evaporator fan,Low speed	EFL	OFF	OFF	OFF	OFF
	Condenser fan	CF	ON/OFF *1	ON	ON/OFF *4	OFF
Solenoid valve	Liquid solenoid valve	LSV	ON	ON	OFF	OFF
	Economizer solenoid valve	ESV	ON	OFF	OFF	OFF
	Injection solenoid valve	ISV	ON/OFF *2	ON/OFF *5	ON/OFF *3	OFF
	Hot-gas solenoid valve	HSV	OFF	ON/OFF *5	ON	OFF
	Defrost solenoid valve	DSV	OFF	ON/OFF *5	ON	OFF
	By-pass solenoid valve	BSV	OFF	ON/OFF *5	OFF	OFF
	Reheat sonenoid valve	RSV	ON/OFF *6	OFF	OFF	OFF
Suction modulation valve		SMV	100%	3 to 100%	100%	100%
Electronic expansion valve		EV *7	200 to 2000pls	200 to 2000pls	0pls	1000pls
		EV *8	21 to 420pls	41 to 420pls	0pls	189pls

*1 High pressure control
*2 Injection control
*3 Charge control
*4 Release control
*5 capacity control and hot gas by-pass control
*6 RSV : OFF ≦RS 20 ℃, RSV : ON ≧RS 25 ℃
*7 EV (2000pls/100%) for LXE10E-A
*8 EV (420pls/100%) for LXE10E100 or later

DAIKIN

TECHNICAL INFORMATION

DAIKIN INDUSTRIES LTD
AFTER SALES SERVICE DIV.

Subject	Piping Diagram ; DEFROST & HEAT-UP OPERATION	4
Model	LXE10E101A, LXE10E102A, LXE10E-1	

High Pressure Vapor
High Pressure Liquid
Energized valve coil/fan motor
Low Pressure Vapor
Low Pressure Liquid/Vapor

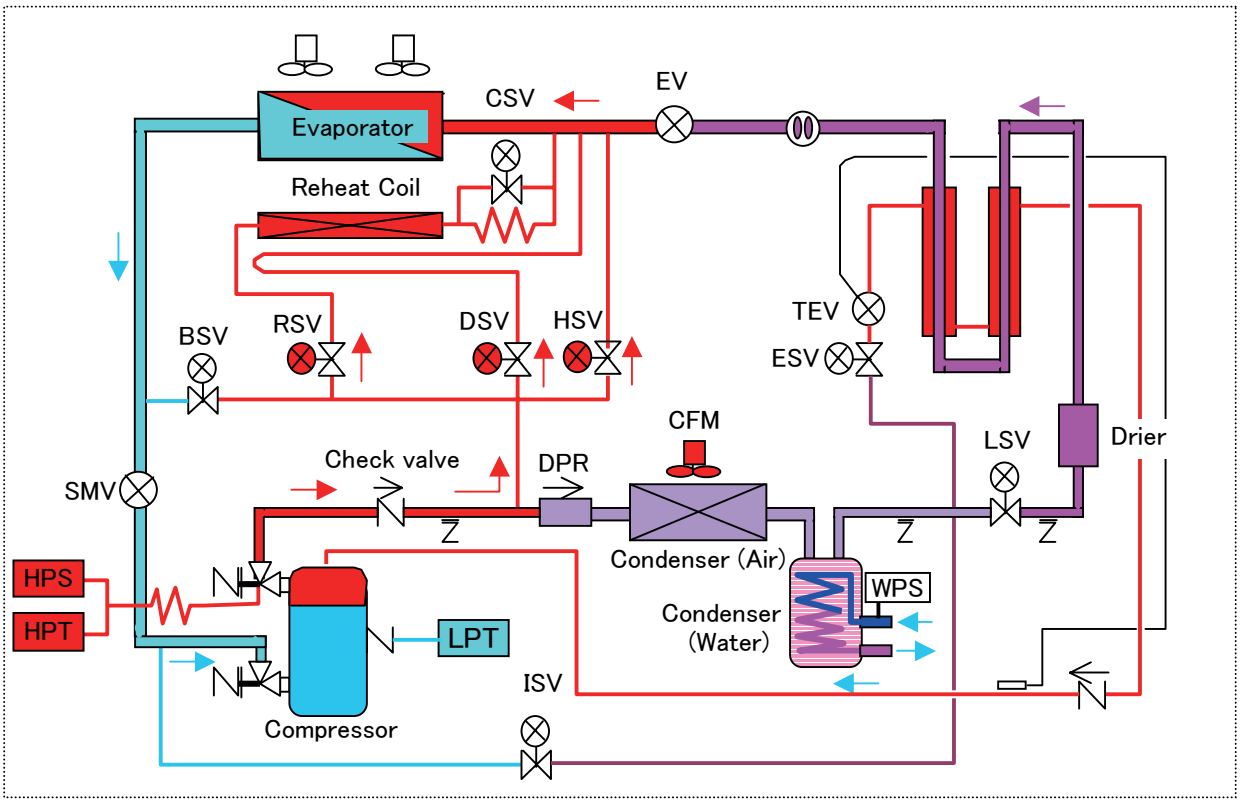

※Before defrost operation, the refrigerant is pumped down into the liquid line between DPR and LSV.

※ **Charge & Release control** during the defrost operation

[Charge control]	[Release control]
Charge start (ISV open): HP<700kPa or LP<40 kPa	Release start (CFM run): HP>1200kPa
Charge stop (ISV close): HP>800kPa or LP>70 kPa	Release stop (CFM stop): HP<1150kPa

※**EV**: Opening 5% for defrost, 0% for heat-up **SMV**: Opening 100%

Subject	2.5.3 Defrosting operation
Model	LXE10E100 or later, LXE10E-A, LXE10E-1

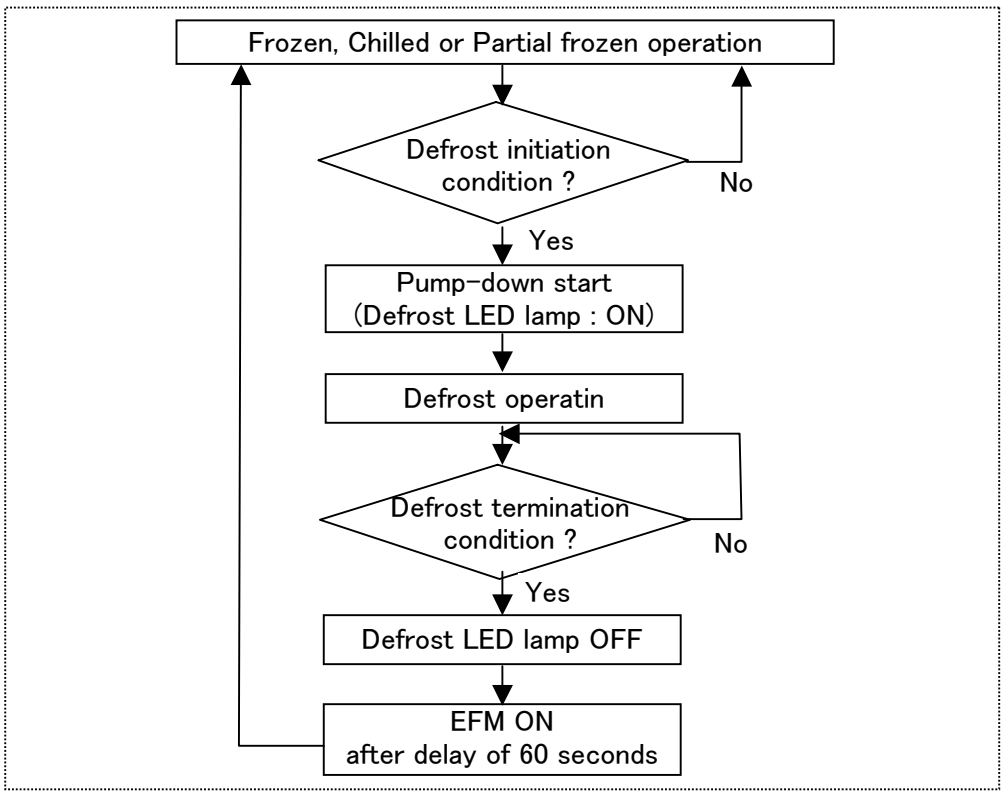

Components			Pump-down	Defrosting
Motor	Compressor	CC	ON	ON
	Evaporator fan,High speed	EFH	OFF	OFF
	Evaporator fan,Low speed	EFL	OFF	OFF
	Condenser fan	CF	ON	ON/OFF *2
Solenoid valve	Liquid solenoid valve	LSV	OFF	OFF
	Economizer solenoid valve	ESV	ON	OFF
	Injection solenoid valve	ISV	OFF	ON/OFF *1
	Hot-gas solenoid valve	HSV	OFF	ON
	Defrost solenoid valve	DSV	OFF	ON
	By-pass solenoid valve	BSV	OFF	OFF
	Reheat sonenoid valve	RSV	OFF	ON/OFF *3
Suction modulation valve		SMV	100%	100%
Electronic expansion valve		EV *4	200 to 2000pls	100pls
		EV *5	48 to 420pls	0pls

*1 Charge control
*2 Release control
*3 RSV ON ≧EOS 15 ℃, RSV OFF<EOS 15 ℃
*4 EV (2000pls/100%) for LXE10E-A
*5 EV (420pls/100%) for LXE10E100 or later

DAIKIN

TECHNICAL INFORMATION

DAIKIN INDUSTRIES LTD
AFTER SALES SERVICE DIV.

Subject	Piping Diagram ; DEHUMIDIFICATION OPERATION	4
Model	LXE10E101A, LXE10E102A, LXE10E-1	

High Pressure Vapor
High Pressure Liquid
Energized valve coil/fan motor
Low Pressure Vapor
Low Pressure Liquid/Vapor

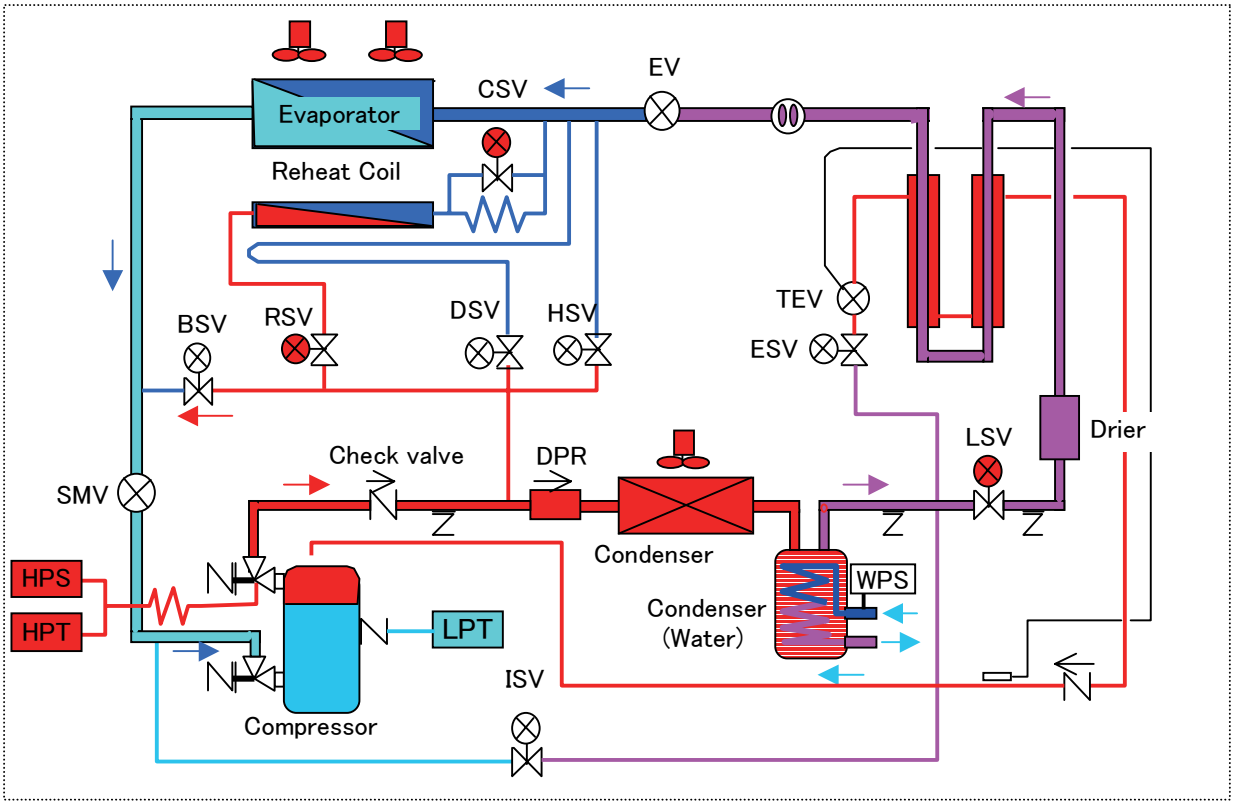

*The dehumidification control is performed only during "chilled operation" in the capacity control.
I.e when the control temperaturer goes to out of range, the dehumidification control is turned off by turning RSV and CSV off.

DAIKIN

TECHNICAL INFORMATION

DAIKIN INDUSTRIES LTD
AFTER SALES SERVICE DIV.

Subject	Automatic pump down
Model	LXE10E100 or later, LXE10E-A, LXE10E-1

● How to go to AUTO PUMP DOWN operation ?

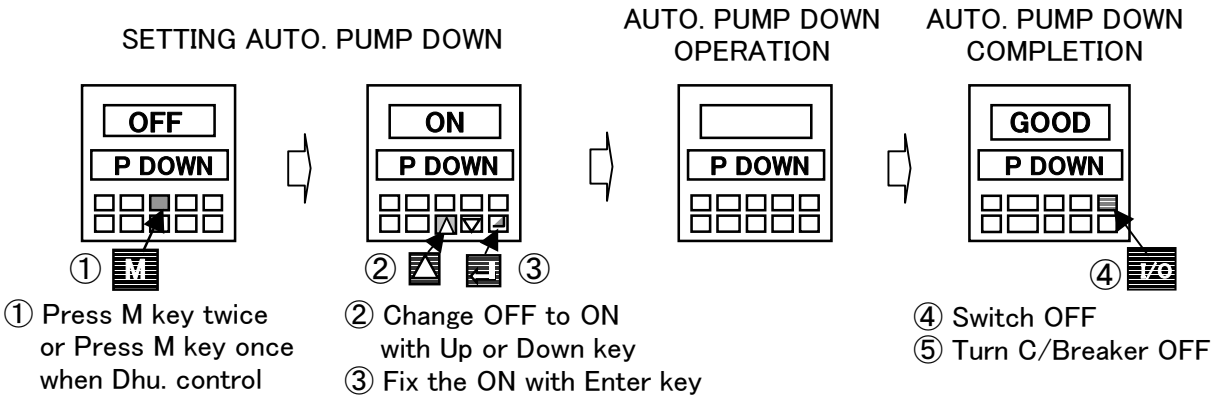

● What is AUTO PUMP DOWN used for ?

[1] REPLACEMENT OF DRIER

This is a main purpose of automatic pump down operation.

* As soon as the automatic pump down operation is completed, loosen the flare nuts of the drier and then quickly replace the drier with a new one.
* No vacuum-dehydration is requested after replacement of drier.

Attention !!

If no sound of gas refrigerant leakage is confirmed when the flare nuts of the drier are loosened, air mixing into the piping is suspected. In this case, conduct vacuum-dehydration from the service port (No.3) at the inlet side of drier.

[2] RECOVERY OF REFRIGERANT

* Conduct the automatic pump down operation in advance, and then recover the refrigerant.
* Refer to 4.1.4 for more detail.

[3] REFRIGERANT CHARGE (3rd step)

* Operate the automatic pump down when the specific refrigerant amount can not be charged due to the pressure balance.
* Refer to 4.1.4 for more detail.

Subject	Automatic pump down LXE10E-A 2/2

● How is AUTO PUMP DOWN operated ?

Step	①	②	③	④	⑤
	[Preperation] Enter Automatic pump down. ⇩ Normal operation for 30 sec. *1	[Pump-down] *2 Pump down start ⇩ Compressor stops at LP≦-55kPa	[Pump-down] *2 Compressor continues to stop for 20 seconds.	[Pressure equalizing] Full stop for 40 sec. ⇩ Increase LPT to 0～300Kpa	[Termination] EV full close ⇩ Termination GOOD
COMP	ON	ON	OFF	OFF	OFF
EFM	High	High	High	OFF	OFF
CFM	ON	ON	ON	OFF	OFF
LSV	ON				
ESV		ON			
ISV				ON (2nd) *3	
HSV				ON (1st) *3	
DSV					
BSV					
RSV					
SMV	100%	100%	100%	100%	100%
EV	20%	40%	40%	40%	0%

*1 If HPT>1700kPa, the 30 sec. operation is cancelled.

*2 Pump-down operation ②⇒③ is repeated maximum 3 times in some conditions.

*3 If LPT>0 kPa after the 40 sec. full stop, HSV ON⇒ISV ON are cancelled.

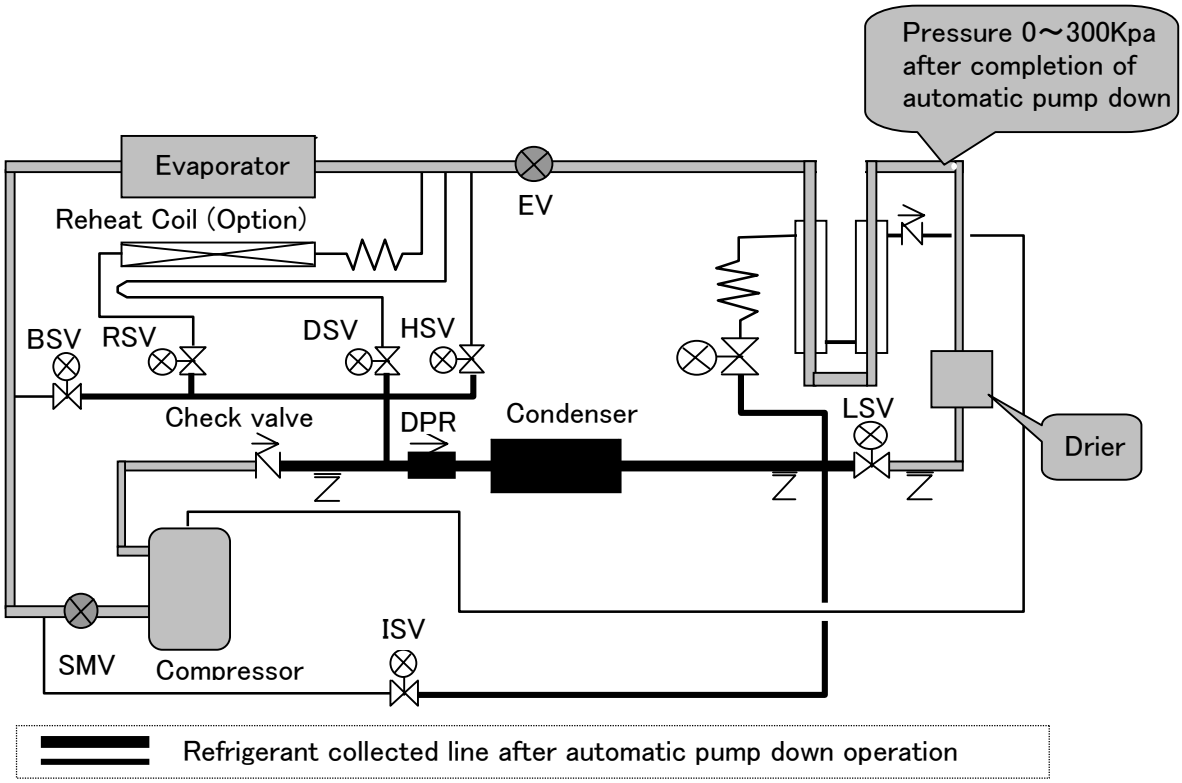

DAIKIN

TECHNICAL INFORMATION

DAIKIN INDUSTRIES LTD
AFTER SALES SERVICE DIV.

Subject	How to use 5 service ports	4
Model	LXE10E-1	

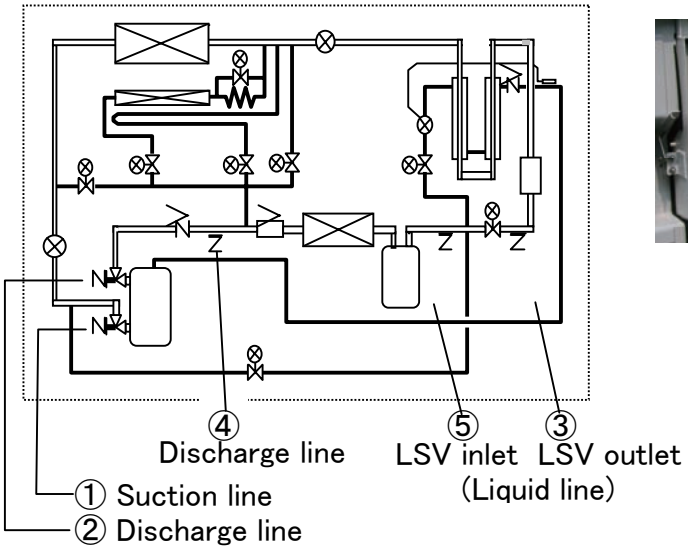

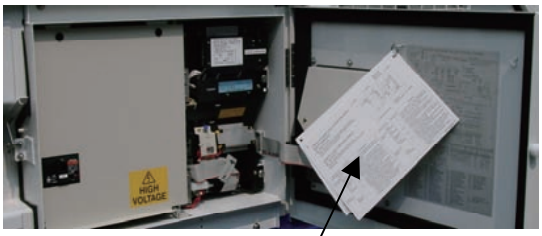

Instruction Cards

How to use
5 service ports

Service work		Service port	Remarks
Pressure Check	High pressure	②	Take care that the high pressure at the port ④ & ⑤ will be keeping for a while after the unit stops. (④ & ⑤ are in closed line between check valve and LSV.)
	Low pressure	①	
Refrigerant Charge	[1] Refrigerant Recovery	⑤	Recover refrigerant from port ⑤ after operating Automatic Pump-Down first.
		④ & ⑤	Recover completely refrigerant left in the unit from port ④ & ⑤.
	[2] Vacuum & Dehydration	④ & ⑤	After recovering, vacuum from port ④ & ⑤. *BSV,DSV,HSV & ISV are reversible in flow. *The connection at port ④ is same size as at ① for low pressure .
	[3] Liquid charging	⑤→③	After cacuuming, charge liquid refrigerant from ⑤ first and then from ③.
			If not reached to the specified amount, go to next below.
R134a specified amount 5.8Kg for LXE10E101A and 102A. 5.4Kg for LXE10E-1		③	1.Operate Automatic Pump-Down first and stop it using ON/OFF switch when the compressure stops during the Automatic Pump down operation. 2. Charge liquid refrigerant from port ③.

Subject	**Pressure Check & Refrigerant Charge (1/2)** Appendix--How to use 5 service ports	**4**
Model	LXE10E101A, 102A, LXE10E-1	

[1] Operation Pressure Check

Operation Pressure Check

Check high pressure from the service port ② on the compressor discharge.
Check low pressure from the service port ① on the compressor suction.

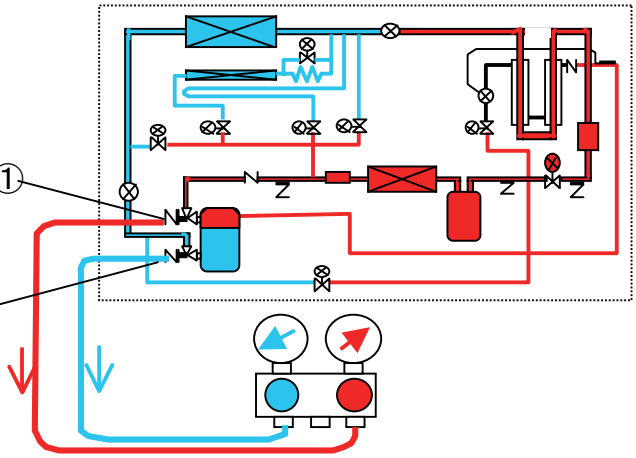

[2] Refrigerant Charge

Refrigerant Recovery

1. Operate **Automatic Pump Dpwn** first.
2. Then recover refrigerant from port ⑤.
3. Recover completely refrigerant left in the unit from ports ④&⑤.

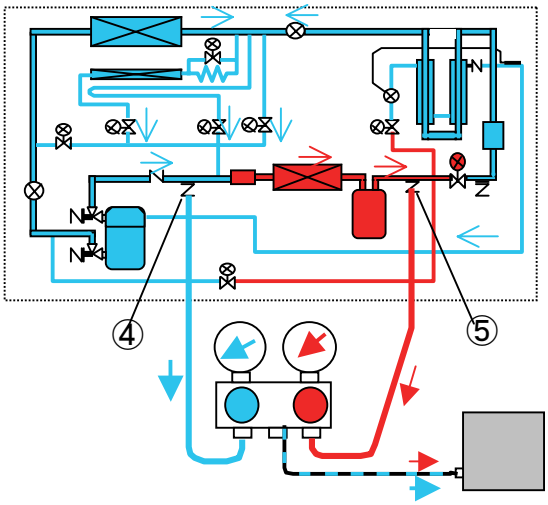

Vacuum & Dehydration

1. After recovering, vacuum and dehydrate from ports ④ & ⑤.

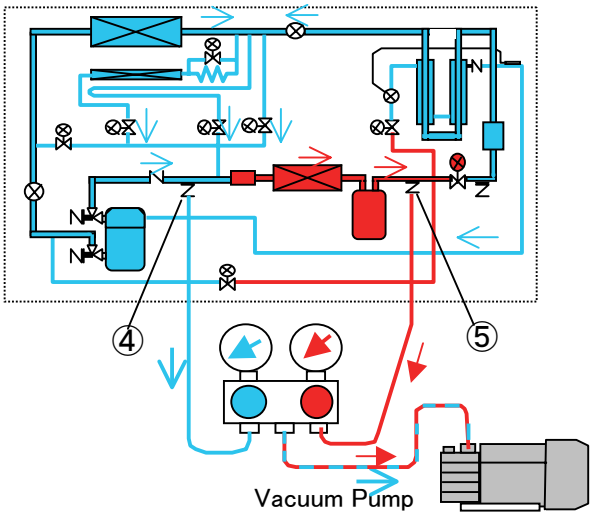

Refrigerant charge, 1st Step

1. After vacuum & dehydration, charge the liquid refrigerant from port ⑤.
(Aprrox. **50%** of the charged amount will be charged.)

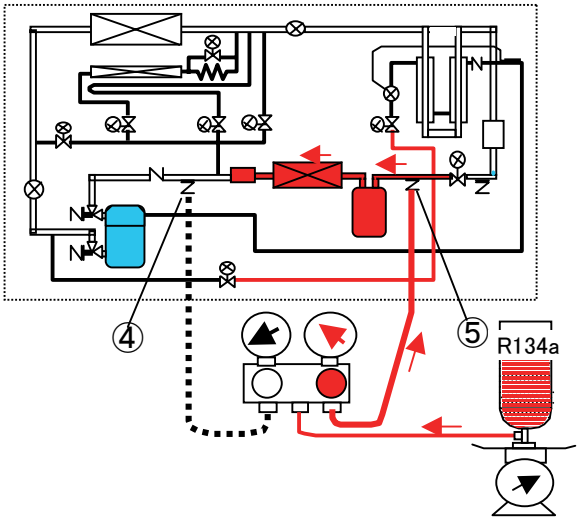

Refrigerant charge, 2nd Step

2.Replace the manifold gauge hose to port ③ and add the liquid refrigerant. Then if it reached to the specified charge amount, close the cock of the refrigerant cylinder.

If it is still not reached to the specified amount due to the pressure valance, close the cock of the refrigerant cylinder and go to next 3rd step.

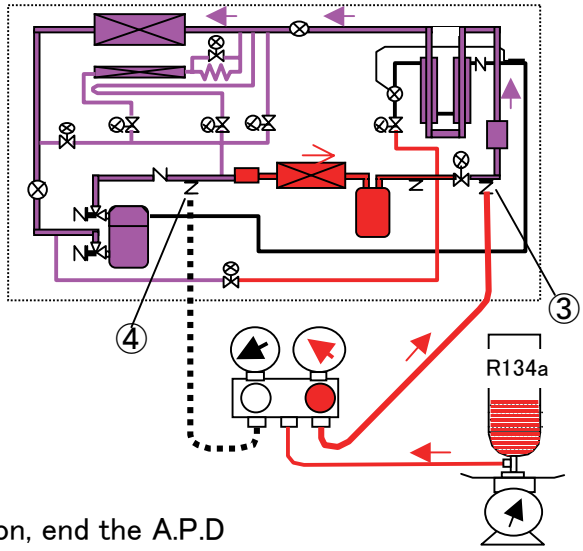

Refrigerant charge, 3rd Step

3. Operate automatic pump down (A.P.D).
When the compressor stops during the operation, end the A.P.D operation using Unit ON/OFF switch.

Attention !! The compressor stops twice during the A.P.D operation.
It is possible to end the operation either at the 1st stop or at the 2nd stop.
＊Be sure not to go to the completion, GOOD displayed, of A.P.D.

4. Open the cock of the ref. cylinder and add the liquid refrigerant. from port ③.
Then if it reached to the specified amount 5.4 Kgf, close the cock of the ref. cylinder.

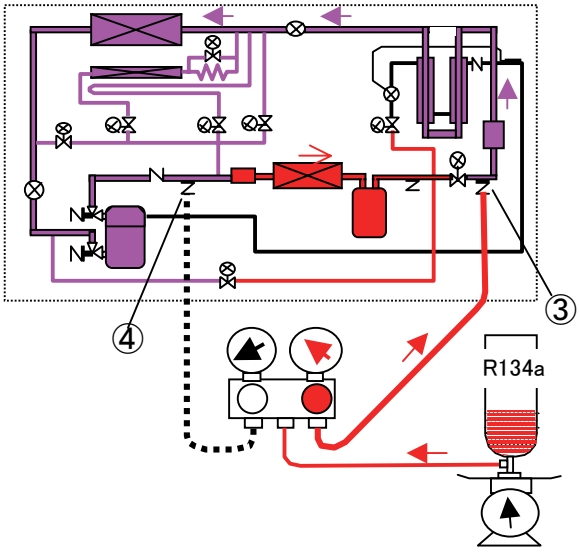

Subject	STOP VALVE HANDLING	7
Model	LXE10E101A, 102A, LXE10E-1	

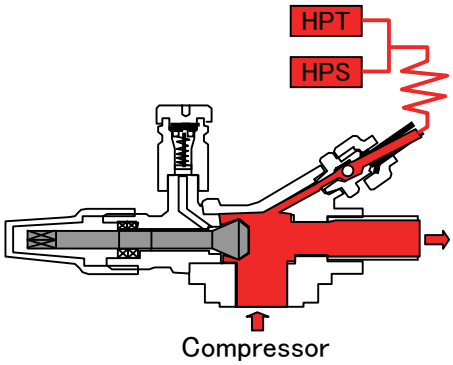

[FULL OPEN]

Normal opening
during operation

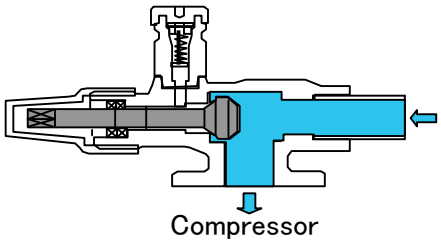

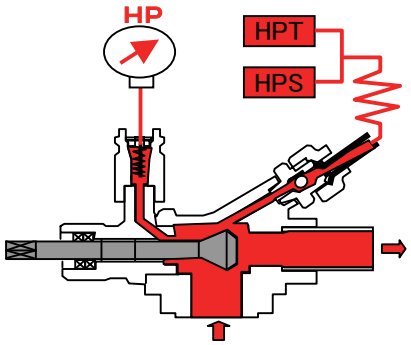

[HALF OPEN]

Pressure check
during operation

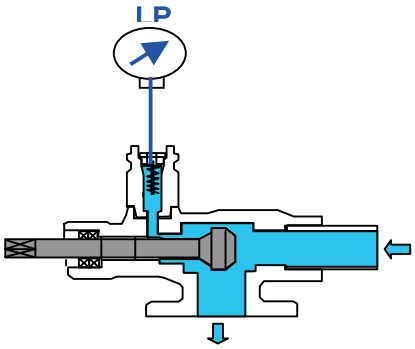

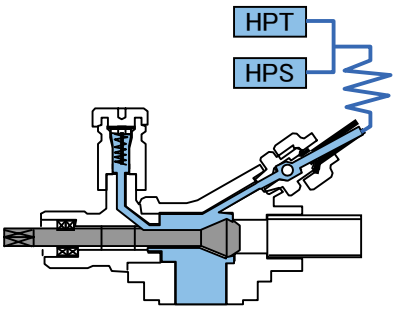

[FULL CLOSE]

Compressor
replacement

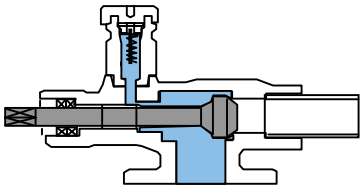

[ATTENTION for Valve Shaft Handling]

1. Be sure not to lose the "RING PACKING" when the "cap" is removed.
   --If no "RING PACKING" equipped, it may cause of GAS LEAKAGE.
2. Loosen the "GRAND" before closing or opening the Valve Shaft.
3. Fasten the "GRAND" after opening or closing the Valve Shaft.
   --If no loosing or no fastening the "GARND", the "Grand Packing" will be worn away and it may cause of GAS LEAKAGE.

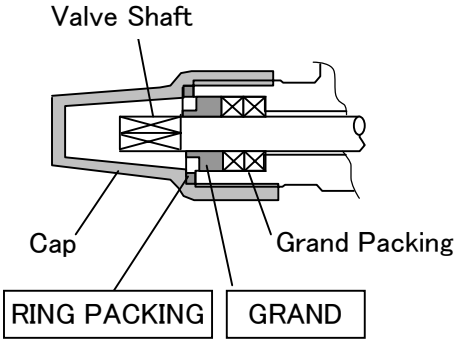

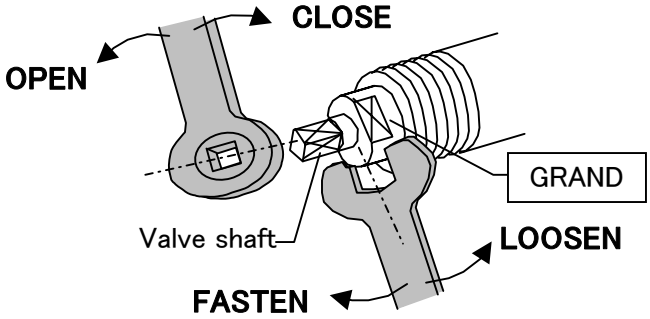

[Tightening torque]

	Discharge side stop valve			Suction side stop valve			Remarks
	N.m	kgf.cm	lb.ft	N.m	kgf.cm	lb.ft	
Valve shaft	20	204	14.8	35	357	25.8	for full close or full close
Grand	15	153	11.8	15	153	11.8	

In case of the controller malfunction, Emergency Operation can be excuted by using emergency operation kit.

[1] OPERATING CONDITIONS during EMERGENCY OPERATION

1) Available at Frozen Operation Mode (SP=-10.1℃～-30℃)
2) Temperature can not be controlled.
   Turn the circuit breaker ON or OFF to maintain the temperature.
3) For Cooling operation
   * Compressor,Evaporator Fan Motor with low speed and Condenser Fan Motor run continuously.
   * Electronic expansion valve opening fixed
   * Suction Modulation Valve opening fixed
   * Safety devices actuated RPP, HPS and CTP only
3) For Heating operation
   * Evaporator Fan Motor with high speed runs continuously.

[2] COMPONENTS to be prepared for EMERGENCY OPERATION

1. SHORT CIRCUIT SOCKETS
   * Stored on the back of the controller box
2. EMERGENCY CAP for Electronic expansion valve --1080263
3. EMERGENCY MAGNET for Suction modulation valve --1270530

[1] ON-SITE WORK

1. WIRING CHANGE
   1) Wiring change for cutting off the power to CPU board
   2) Wiring change for making the forced running of Compressor, Condenser Fan Motor and Evaporator Fan Motors.
2. OPENING ADJUSTMENT for Electronic Expansion Valve.
3. OPENING ADJUSTMENT for Suction Modulation Valve.

[1] WIRING CHANGE

For cutting off the power to CPU board

① Turn the circuit breaker OFF.

② Disconnect the power supply connector CN82(White) on SMV adapter board.

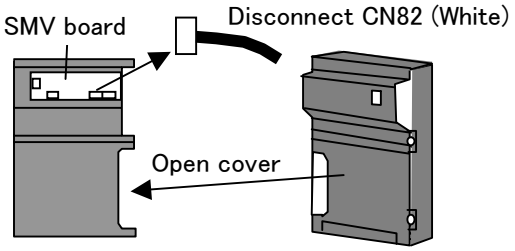

For making the forced heating operation with running of EFM.

③ Remove Short Circuit Connector SCC1-1(Blue), SCC1-2(Red) and SCC2(Blue) stored on back of controller.

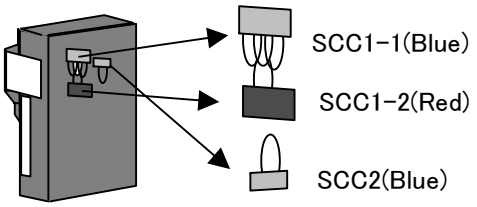

④ Connect the Short Circuit Connector SCC1-2(Red) to CN8 and SCC2(Blue) to CN10 on terminal board.

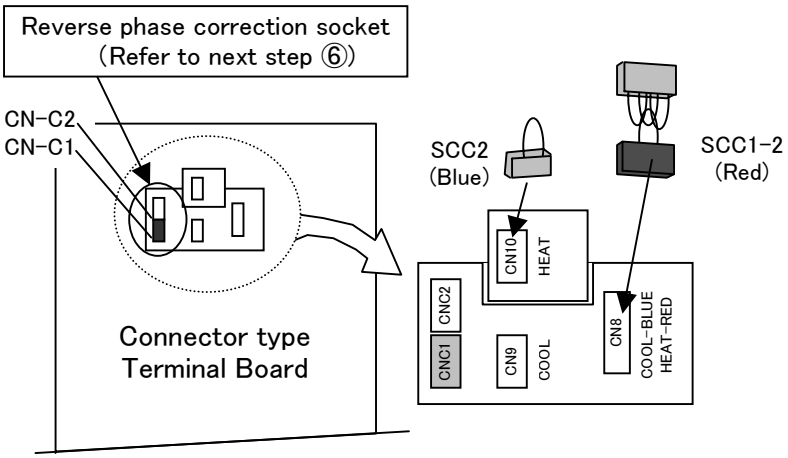

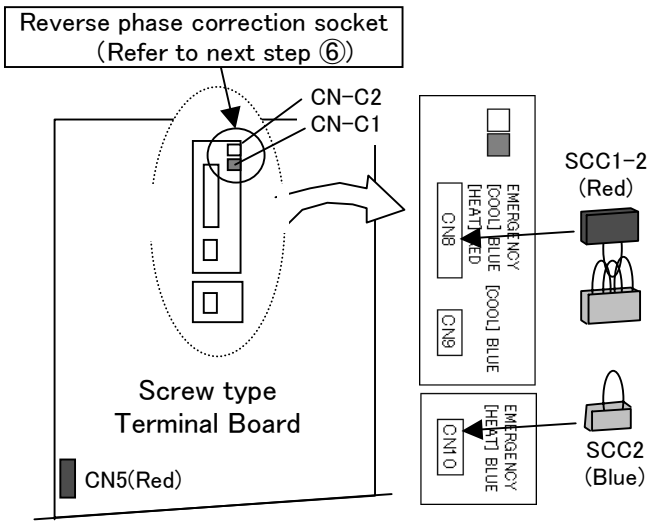

For checking reverse phase power

⑤ Turn the circuit breaker ON.
If the power is in reverse phase, EFM runs reversely with high speed. Then fresh air is sucked to Outlet Hole and discharged from Inlet Hole at the lower ventilator.

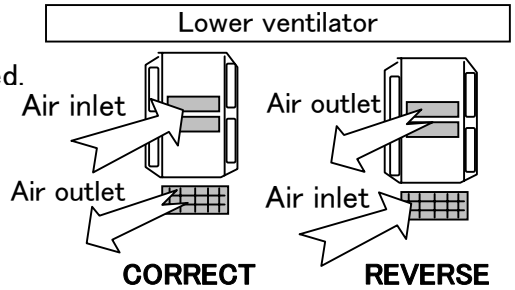

For correction of reverse phase power

⑥ If it is in reverse phase, turn the circuit breaker OFF and replace the reverse phase correction socket to opposite side.
("Lower socket CN-C1 to Upper CN-C2" or "Upper CN-C2 to Lower CN-C1")

Operate continuously for heating operation.
For cooling operation, go to next step ⑦.

For making the forced cooling operation with running of COMP., CFM and EFM.

⑦ Connect Short Circuit Connector SCC1-1(Blue) to CN8 and SCC2(Blue) to CN9 on terminal board.

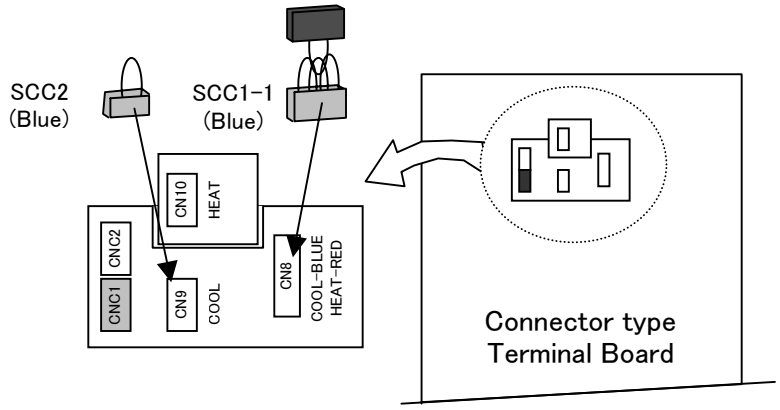

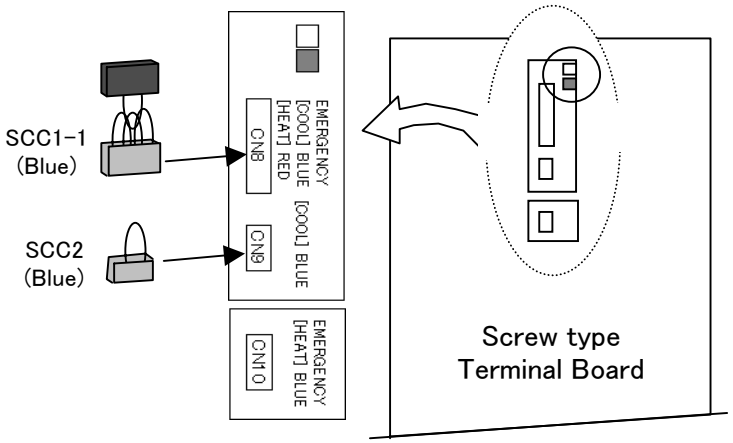

[2] EV opening adjustment (1/4 open)

① Remove the coil ② Set the emergency coil cap. ③ Close fully ④ Open 60 degree to counter clockwise.

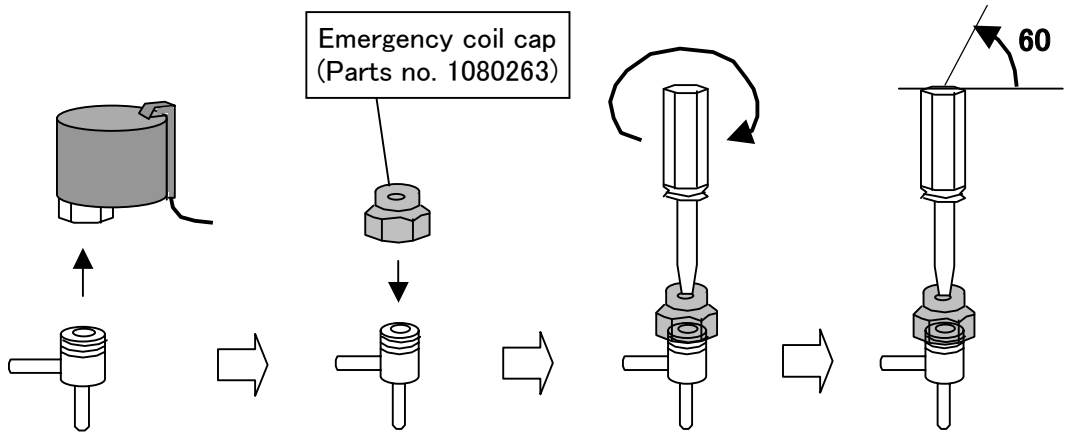

Recommendation !!

＊ EV opening during pull-down operation

To shorten the operation hours, it is recommended that the opening can be adjusted up to **max. 50%.**

However if the frost is observed around the comp. body or the super heat is insufficient due to wet operation, close slightly the opening.

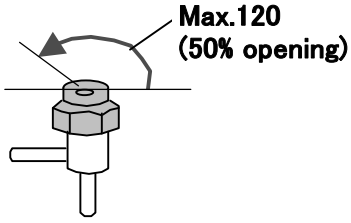

[3-1] SMV opening adjustment (Full open)

① Turn the No.1 dip-switch on.

② Turn circuit breaker on.

③.Then listen to the active noise "Ta--,Ta--" from SMV.

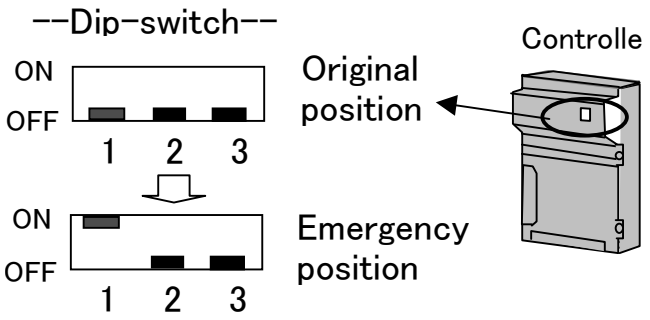

[3-2] SMV opening MANUAL adjustment (Full open)

When SMV adapter board as bad as controller is malfunctioned, apply the manual adjustment followed below.

Note :
When SMV adapter board is malfunctioned but not controller, the manual adjustment can be applied, too.

① Remove the coil from SMV body.

② Contact the emergency magnet to the coil installing section of the valve with the UPSIDE up.

③ Rotate the emergency magnet counter-clockwise to open the valve fully.

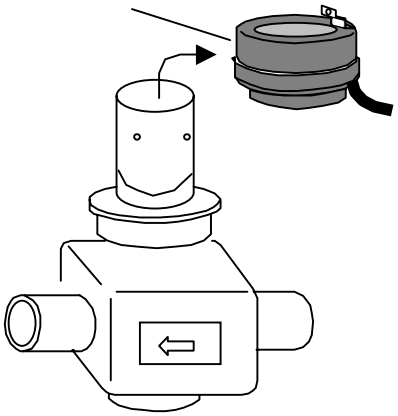

Emergency Magnet
(Parts no. 1270530)

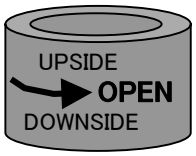

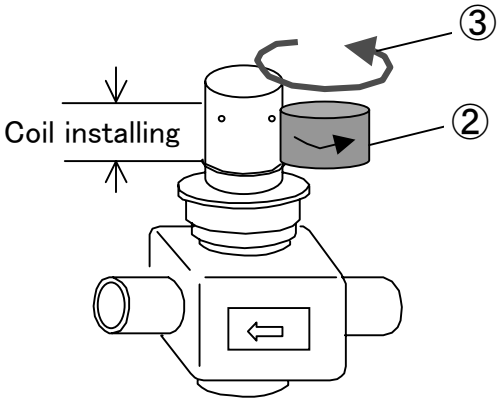

When the valve is fully opened, inside driving magnet will be inactive and the emergenct magnet can be removed.

APPENDIX

1. Standard tightening torques
2. Resistance of motor coil and valve coil

3. HFC-134a Characteristic Table, Temperature-Gauge Pressure
4. HFC-134a Characteristic Curve, Temperature-Gauge Pressure
5. HFC-134a Thermodynamic Properties of Saturation Condition
6. HFC-134a p-h chart

7. Characteristic table for Temperature Sensor
8. Characteristic table for High Pressure Tranceducer
9. Characteristic table for Low Pressure Tranceducer

10

Standard tightening torques　　標準締付トルク

区分	Main part	代表部品	Size サイズ	Tightening torque 締付トルク		
				N·m	kgf·cm	lbf·ft
Bolt ボルト	Small parts	小物部品	M4	1.6	16	1.2
	Solenoid valve	電磁弁	M5	1.2	12.2	0.9
	Access panel	外板	M6	5.2	53	3.8
	Evaporator fan motor	蒸発器 ファン電動機	M8	12.3	125	9.1
	Condenser fan motor	凝縮器 ファン電動機				
	Control box	コントロール ボックス				
	Service door	サービス扉				
	Evaporator fan motor mounting base	蒸発器ファン 電動機取付脚	M10	25.2	257	18.6
	Compressor suction flange	吸入フランジ				
	Compressor discharge flange	吐出フランジ				
	Compressor legs	圧縮機脚	M12	42.7	435	31.5
Flare nut フレアナット	Low pressure port on compressor body	圧縮機胴体 圧力ポート	mm　inch Φ　2/8	15.7	160	11.3
	Injection port on compressor head	圧縮機頭 インジェクション	Φ9.5　3/8	36.3	370	26.8
	Dryer	ドライヤ	Φ12.7　4/8	54.9	500	40.5
Electronic expansion valve coil (EV)		電子膨張弁コイル(EVコイル)		7.0 to 15.0	73 to 156	5.1 to 11.0
Compressor stop valves 圧縮機閉鎖弁	Discharge 吐出側	Valve shaft	弁棒	20	204	14.8
		Grand	グランド	15	153	11.8
	Suction 吸入側	Valve shaft	弁棒	35	357	25.8
		Grand	グランド	15	153	11.8

Note :　Tolerance of tightening torque is within ±10%.
注 :　許容締付トルク範囲±10%

Resistance of motor coil and valve　　モータコイル及び電磁弁コイルの抵抗値

Symbol シンボル	Name	品名	Resistance　抵抗値Ω
CM	Compressor motor coil	圧縮機モータコイル	1.780Ω（@75℃）
CFM	Condenser fan motor coil	凝縮器ファンモータコイル	21.5Ω
EFMH	Evaporator fan motor coil High speed	蒸発器ファンモータコイル 高速	U-V 114Ω±10%（20℃）
EFML	Evaporator fan motor coil Low speed	蒸発器ファンモータコイル 低速	U-V 17.2Ω±10%（20℃）
LSV	Liquid solenoid valve coil	液電磁弁コイル	15.2Ω±10%（20℃）
HSV	Hot gas solenoid valve coil	ホットガス電磁弁コイル	
DSV	Defrosting solenoid valve coil	デフロスト電磁弁コイル	
ISV	Injection solenoid valve coil	インジェクション電磁弁コイル	
ESV	Economizer solenoid valve coil	エコノマイザ電磁弁コイル	
BSV	Hot gas by-pass solenoid valve coil	ホットガスバイパス電磁弁コイル	
RSV	Reheater solenoid valve coil	レヒーター電磁弁コイル	
CSV	Capillary solenoid valve coil (LXE10E-1 only)	キャピラリー電磁弁コイル （LXE10E-1のみ）	
EV	Gear driven type Electronic expansion valve coil ギヤー駆動式電子膨張弁コイル	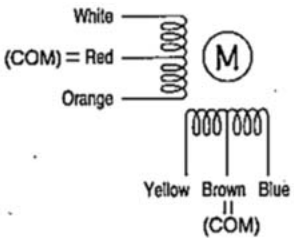	LXE10E-A, 10E-1, 10D White－Red　150Ω±10% Orange－Red　150Ω±10% Yellow－Brown 150Ω±10% Blue－Brown　150Ω±10%
	Direct driven type Electronic expansion valve coil 直動式電子膨張弁コイル		LXE10E100 or later White－Red　46Ω±3Ω Orange－Red　46Ω±3Ω Yellow－Brown　46Ω±3Ω Blue－Brown　46Ω±3Ω
SMV	Suction modulation valve coil 吸入比例弁	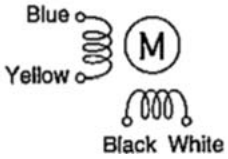	Blue－Yellow　113Ω （20℃） Black－White　113Ω （20℃）

HFC-134a Characteristic Table, Temperature-Gauge Pressure
HFC-134a 温度-ゲージ圧力特性表

Temperature 温度		Gauge Pressure ゲージ圧力			Temperature 温度		Gauge Pressure ゲージ圧力		
℃	° F	kPa	kg/cm²·G	PSIG	℃	° F	kPa	kg/cm²·G	PSIG
-40	-40.0	-49	-0.50	-7.1	20	68.0	470	4.79	68.1
-39	-38.7	-46	-0.47	-6.6	21	69.8	488	4.97	70.7
-38	-36.4	-44	-0.44	-6.3	22	71.6	507	5.16	73.5
-37	-34.6	-41	-0.41	-5.9	23	73.4	525	5.35	76.1
-36	-32.8	-37	-0.38	-5.3	24	75.2	544	5.55	78.8
-35	-31.0	-34	-0.34	-4.9	25	77.0	564	5.75	81.7
-34	-29.2	-31	-0.31	-4.4	26	78.8	584	5.95	84.6
-33	-27.4	-27	-0.27	-3.9	27	80.6	604	6.16	87.5
-32	-25.6	-24	-0.24	-3.4	28	82.4	625	6.37	90.6
-31	-23.8	-20	-0.20	-2.9	29	84.2	647	6.59	93.8
-30	-22.0	-16	-0.16	-2.3	30	86.0	668	6.81	96.8
-29	-20.2	-12	-0.12	-1.7	31	87.8	691	7.04	100.1
-28	-18.4	-8	-0.07	-1.1	32	89.6	713	7.27	103.3
-27	-16.6	-3	-0.03	-0.4	33	91.4	737	7.51	106.8
-26	-14.8	1	0.01	0.1	34	93.2	760	7.75	110.2
-25	-13.0	6	0.06	0.8	35	95.0	785	8.00	113.8
-24	-11.2	11	0.11	1.5	36	96.8	810	8.25	117.4
-23	9.4	16	0.16	2.3	37	98.6	835	8.51	121.0
-22	7.6	21	0.21	3.0	38	100.4	861	8.77	124.8
-21	5.8	27	0.27	3.9	39	102.2	887	9.04	128.6
-20	4.0	32	0.33	4.6	40	104.0	914	9.31	132.5
-19	2.2	38	0.39	5.5	41	105.8	941	9.59	136.4
-18	0.4	44	0.45	6.3	42	107.6	969	9.88	140.5
-17	1.4	51	0.51	7.3	43	109.4	998	10.17	144.7
-16	3.2	57	0.58	8.2	44	111.2	1027	10.47	148.9
-15	5.0	64	0.64	9.2	45	113.0	1057	10.77	153.2
-14	6.8	71	0.71	10.2	46	114.8	1087	11.08	157.6
-13	8.6	78	0.79	11.3	47	116.6	1118	11.39	162.1
-12	10.4	85	0.86	12.3	48	118.4	1149	11.72	166.6
-11	12.2	93	0.94	13.4	49	120.2	1182	12.04	171.3
-10	14.0	100	1.02	14.5	50	122.0	1214	12.38	176.0
-9	15.8	108	1.10	15.6	51	123.8	1248	12.72	180.9
-8	17.6	117	1.18	16.9	52	125.6	1281	13.06	185.7
-7	19.4	125	1.27	18.1	53	127.4	1316	13.42	190.8
-6	21.2	134	1.36	19.4	54	129.2	1351	13.77	195.8
-5	23.0	143	1.45	20.7	55	131.0	1387	14.14	201.1
-4	24.8	152	1.55	22.0	56	132.8	1424	14.51	206.4
-3	26.6	162	1.65	23.4	57	134.6	1461	14.89	211.8
-2	28.4	172	1.75	24.9	58	136.4	1499	15.28	217.3
-1	30.2	182	1.85	26.3	59	138.2	1538	15.67	223.0
0	32.0	192	1.96	27.8	60	140.0	1577	16.07	228.6
1	33.8	203	2.07	29.4	61	141.8	1617	16.48	234.4
2	35.6	214	2.18	31.0	62	143.6	1658	16.90	240.4
3	37.4	225	2.29	32.6	63	145.4	1699	17.32	246.3
4	39.2	237	2.41	34.3	64	147.2	1741	17.75	252.4
5	41.0	249	2.53	36.1	65	149.0	1784	18.19	258.6
6	42.8	261	2.66	37.8	66	150.8	1828	18.63	265.0
7	44.6	274	2.79	39.7	67	152.6	1872	19.09	271.4
8	46.4	287	2.92	41.6	68	154.4	1918	19.55	278.1
9	48.2	300	3.06	43.5	69	156.2	1964	20.02	284.7
10	50.0	314	3.20	45.5	70	158.0	2010	20.50	291.4
11	51.8	328	3.34	47.5	71	159.8	2058	20.98	298.4
12	53.6	342	3.48	49.5	72	161.6	2107	21.48	305.5
13	55.4	357	3.63	51.7	73	163.4	2156	21.98	312.6
14	57.2	372	3.79	53.9	74	165.2	2206	22.49	319.8
15	59.0	387	3.95	56.1	75	167.0	2257	23.01	327.2
16	60.8	403	4.11	58.4	76	168.8	2309	23.54	334.8
17	62.6	419	4.27	60.7	77	170.6	2362	24.08	342.4
18	64.4	436	4.44	63.2	78	172.4	2415	24.62	350.1
19	66.2	453	4.62	65.6	79	174.2	2470	25.18	358.1
					80	176.0	2525	25.74	366.1

Conversion : 1kgf/cm²·G＝98.0665kPa　　1kPa＝0.145PSIG

HFC-134a Characteristic Curve, Temperature-Gauge Pressure
HFC-134a 温度-ゲージ圧力特性グラフ

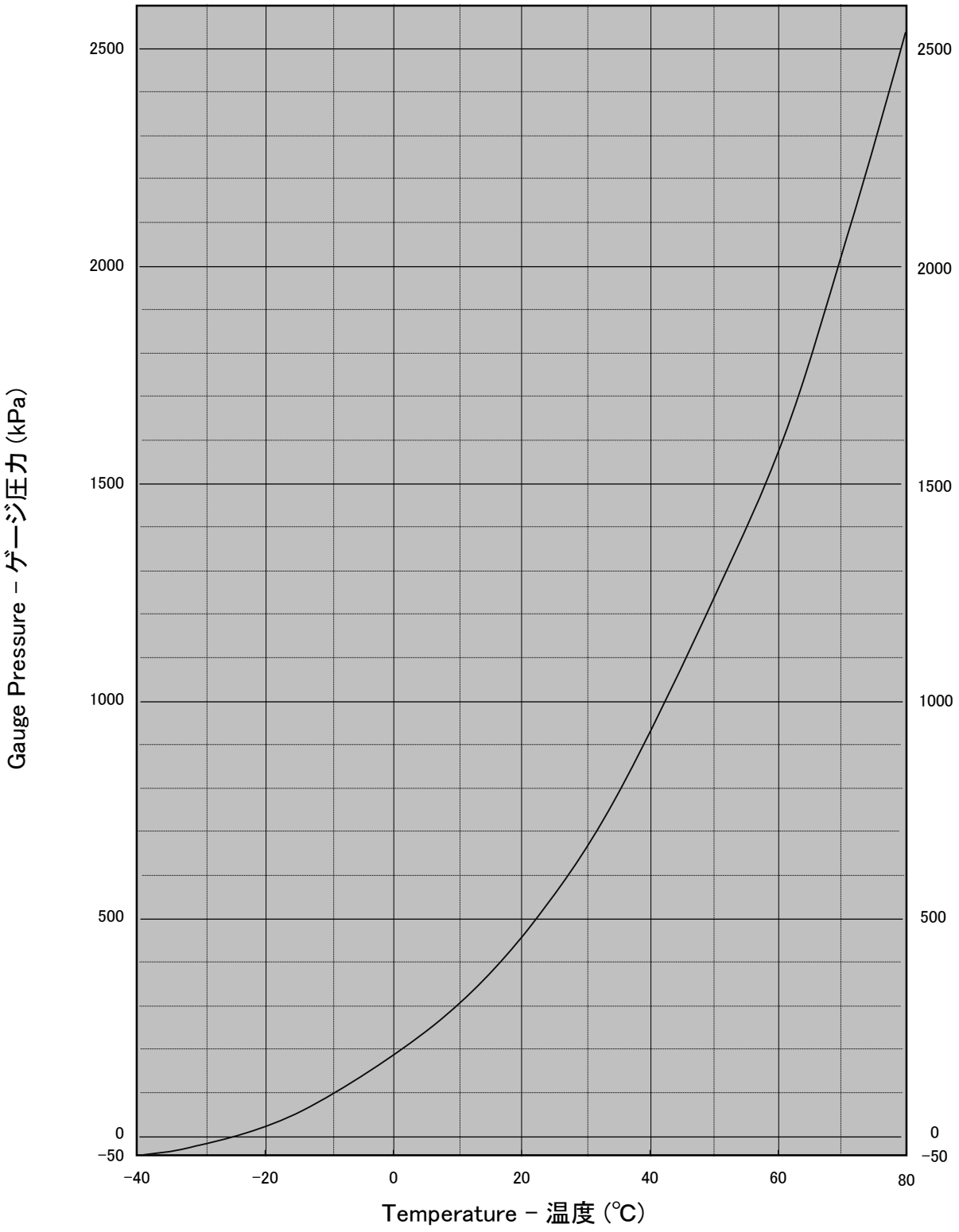

This curve is created based on the HFC-134a Characteristic Table of the previous page.

HFC-134a

Thermodynamic Properties of Saturation　　HFC-134aの熱力学特性(飽和表)　　(1/2)

Temperature 温度 K	Temperature 温度 ℃	Pressure 圧力 kPa abs *1	Specific Volume 比容積 m³/kg Liquid 液体	Specific Volume 比容積 m³/kg Vapor 蒸気	Density 密度 kg/m³ Liquid 液体	Density 密度 kg/m³ Vapor 蒸気	Specific Enthalpy 比エンタルピ kJ/kg Liquid 液体	Specific Enthalpy 比エンタルピ kJ/kg Vapor 蒸気	Specific Enthalpy 比エンタルピ kJ/kg Latent heat 潜熱	Specific Entropy 比エントロピ kJ/(kg·K) Liquid 液体	Specific Entropy 比エントロピ kJ/(kg·K) Vapor 蒸気	Temp. 温度 K
T	*t*	*P*	*v'*	*v''*	*ρ'*	*ρ''*	*h'*	*h''*	*h''-h'*	*s'*	*s''*	*T*
240	−33.15	72.979	0.00071738	0.25891	1394.0	3.8623	157.23	377.88	220.65	0.8339	1.7533	240
241	−32.15	76.602	0.00071883	0.24741	1391.1	4.0419	158.46	378.52	220.06	0.8390	1.7522	241
242	−31.15	80.367	0.00072030	0.23652	1388.3	4.2280	159.69	379.15	219.46	0.8441	1.7510	242
243	−30.15	84.279	0.00072178	0.22620	1385.5	4.4208	160.93	379.78	218.85	0.8491	1.7499	243
244	−29.15	88.342	0.00072327	0.21642	1382.6	4.6206	162.17	380.41	218.24	0.8542	1.7488	244
245	−28.15	92.559	0.00072477	0.20715	1379.7	4.8275	163.42	381.04	217.62	0.8593	1.7477	245
246	−27.15	96.936	0.00072629	0.19834	1376.9	5.0417	164.67	381.67	217.00	0.8644	1.7467	246
246.97	−26.18	101.325	0.00072777	0.19026	1374.1	5.2561	165.89	382.28	216.39	0.8693	1.7457	246.97
247	−26.15	101.48	0.00072782	0.18999	1374.0	5.2634	165.93	382.30	216.37	0.8695	1.7456	247
248	−25.15	106.18	0.00072937	0.18206	1371.0	5.4927	167.19	382.93	215.74	0.8746	1.7446	248
249	−24.15	111.06	0.00073093	0.17452	1368.1	5.7299	168.45	383.56	215.11	0.8797	1.7437	249
250	−23.15	116.12	0.00073250	0.16736	1365.2	5.9752	169.72	384.19	214.46	0.8847	1.7427	250
251	−22.15	121.35	0.00073408	0.16055	1362.2	6.2287	170.99	384.81	213.82	0.8898	1.7418	251
252	−21.15	126.77	0.00073568	0.15407	1359.3	6.4906	172.27	385.44	213.17	0.8948	1.7409	252
253	−20.15	132.38	0.00073730	0.14790	1356.3	6.7612	173.55	386.07	212.52	0.8999	1.7400	253
254	−19.15	138.19	0.00073892	0.14203	1353.3	7.0407	174.83	386.69	211.86	0.9049	1.7392	254
255	−18.15	144.19	0.00074057	0.13644	1350.3	7.3292	176.12	387.32	211.20	0.9100	1.7383	255
256	−17.15	150.40	0.00074222	0.13111	1347.3	7.6270	177.41	387.94	210.53	0.9150	1.7375	256
257	−16.15	156.81	0.00074389	0.12603	1344.3	7.9344	178.70	388.56	209.86	0.9200	1.7367	257
258	−15.15	163.44	0.00074558	0.12119	1341.2	8.2514	180.00	389.18	209.19	0.9250	1.7360	258
259	−14.15	170.28	0.00074728	0.11657	1338.2	8.5784	181.30	389.80	208.51	0.9300	1.7352	259
260	−13.15	177.35	0.00074900	0.11216	1335.1	8.9156	182.60	390.42	207.82	0.9350	1.7345	260
261	−12.15	184.64	0.00075073	0.10795	1332.0	9.2633	183.90	391.04	207.14	0.9400	1.7338	261
262	−11.15	192.17	0.00075247	0.10393	1329.0	9.6215	185.21	391.66	206.44	0.9450	1.7331	262
263	−10.15	199.93	0.00075424	0.10009	1325.8	9.9907	186.52	392.27	205.75	0.9500	1.7324	263
264	−9.15	207.94	0.00075602	0.096422	1322.7	10.371	187.84	392.89	205.05	0.9550	1.7318	264
265	−8.15	216.19	0.00075781	0.092912	1319.6	10.763	189.15	393.50	204.34	0.9599	1.7311	265
266	−7.15	224.69	0.00075962	0.089556	1316.4	11.166	190.47	394.11	203.64	0.9649	1.7305	266
267	−6.15	233.46	0.00076145	0.086344	1313.3	11.582	191.80	394.72	202.92	0.9698	1.7299	267
268	−5.15	242.48	0.00763300	0.083270	1310.1	12.009	193.12	395.33	202.21	0.9747	1.7293	268
269	−4.15	251.77	0.00076517	0.080327	1306.9	12.449	194.45	395.94	201.48	0.9797	1.7288	269
270	−3.15	261.34	0.00076705	0.077508	1303.7	12.902	195.79	396.54	200.76	0.9846	1.7282	270
271	−2.15	271.19	0.00076895	0.074808	1300.5	13.368	197.12	397.14	200.02	0.9895	1.7277	271
272	−1.15	281.32	0.00077087	0.072220	1297.2	13.847	198.46	397.75	199.29	0.9944	1.7271	272
273	−0.15	291.73	0.00077281	0.069738	1294.0	14.339	199.80	398.35	198.55	0.9993	1.7266	273
273.15	0.00	293.32	0.00077310	0.069375	1293.5	14.414	200.00	398.44	198.44	1.0000	1.7266	273.15
274	0.85	302.45	0.00077477	0.067358	1290.7	14.846	201.14	398.94	197.80	1.0042	1.7261	274
275	1.85	313.46	0.00077675	0.065075	1287.4	15.367	202.49	399.54	197.05	1.0090	1.7257	275
276	2.85	324.78	0.00077874	0.062885	1284.1	15.902	203.84	400.13	196.29	1.0139	1.7252	276
277	3.85	336.41	0.00078076	0.060781	1280.8	16.452	205.19	400.72	195.53	1.0188	1.7247	277
278	4.85	348.36	0.00078280	0.058762	1277.5	17.018	206.55	401.31	194.77	1.0236	1.7243	278
279	5.85	360.63	0.00078487	0.056822	1274.1	17.599	207.91	401.90	193.99	1.0285	1.7238	279
280	6.85	373.22	0.00078695	0.054958	1270.7	18.196	209.27	402.49	193.22	1.0333	1.7234	280
281	7.85	386.15	0.00078906	0.053167	1267.3	18.809	210.63	403.07	192.43	1.0381	1.7230	281
282	8.85	399.43	0.00079118	0.051445	1263.9	19.438	212.00	403.65	191.64	1.0429	1.7226	282
283	9.85	413.04	0.00079334	0.049789	1260.5	20.085	213.38	404.22	190.85	1.0478	1.7222	283
284	10.85	427.01	0.00079551	0.048195	1257.0	20.749	214.75	404.80	190.05	1.0526	1.7218	284
285	11.85	441.33	0.00079771	0.046662	1253.6	21.431	216.13	405.37	189.24	1.0574	1.7214	285
286	12.85	456.02	0.00079994	0.045187	1250.1	22.130	217.51	405.94	188.43	1.0622	1.7210	286
287	13.85	471.08	0.00080219	0.043766	1246.6	22.849	218.90	406.50	187.61	1.0670	1.7207	287
288	14.85	486.51	0.00080447	0.042398	1243.1	23.586	220.29	407.07	186.78	1.0718	1.7203	288
289	15.85	502.32	0.00080677	0.041080	1239.5	24.343	221.68	407.63	185.95	1.0765	1.7200	289
290	16.85	518.52	0.00080911	0.039810	1235.9	25.119	223.07	408.18	185.11	10.813	1.7196	290
291	17.85	535.11	0.00081147	0.038586	1232.3	25.916	224.47	408.74	184.26	1.0861	1.7193	291
292	18.85	552.10	0.00081385	0.037406	1228.7	26.734	225.88	409.29	183.41	1.0909	1.7190	292
293	19.85	569.50	0.00081627	0.036268	1225.1	27.573	227.28	409.83	182.55	1.0956	1.7186	293
294	20.85	587.30	0.00081872	0.035170	1221.4	28.433	228.70	410.37	181.68	1.1004	1.7183	294
295	21.85	605.53	0.00082120	0.034111	1217.7	29.316	230.11	410.91	180.80	1.1051	1.7180	295
296	22.85	624.18	0.00082371	0.033088	1214.0	30.222	231.53	411.45	179.92	1.1099	1.7177	296
297	23.85	643.26	0.00082625	0.032102	1210.3	31.151	232.95	411.98	179.03	1.1146	1.7174	297
298	24.85	662.77	0.00082883	0.031149	1206.5	32.104	234.38	412.50	178.13	1.1194	1.7171	298
298.15	25.00	665.74	0.00082922	0.031009	1206.0	32.249	234.59	412.58	177.99	1.1201	1.7170	298.15
299	25.85	682.73	0.00083144	0.030229	1202.7	33.081	235.81	413.03	177.22	1.1241	1.7168	299

*1　Pressure kPa abs shows absolute pressure.
Gauge pressure kPa = absolute pressure kPa abs − atmospheric pressure 101.325kPa

HFC-134a P-h chart 圧力ー比エンタルピ線図

Note : Vertical axis represents absolute pressure, P kPa abs.
Gauge pressure kPa = absolute pressure kPa abs - atmospheric pressure 101.325kPa

a=Specific Entropy kJ/kg･K , v=Specific Volume ㎥/kg
t=Temperature ℃, x=Vapor/Liquid ratio ---

a=比エントロピ kJ/kg･K , v=比容積 ㎥/kg
t=温度 ℃, x=ガス/液 比率 ---

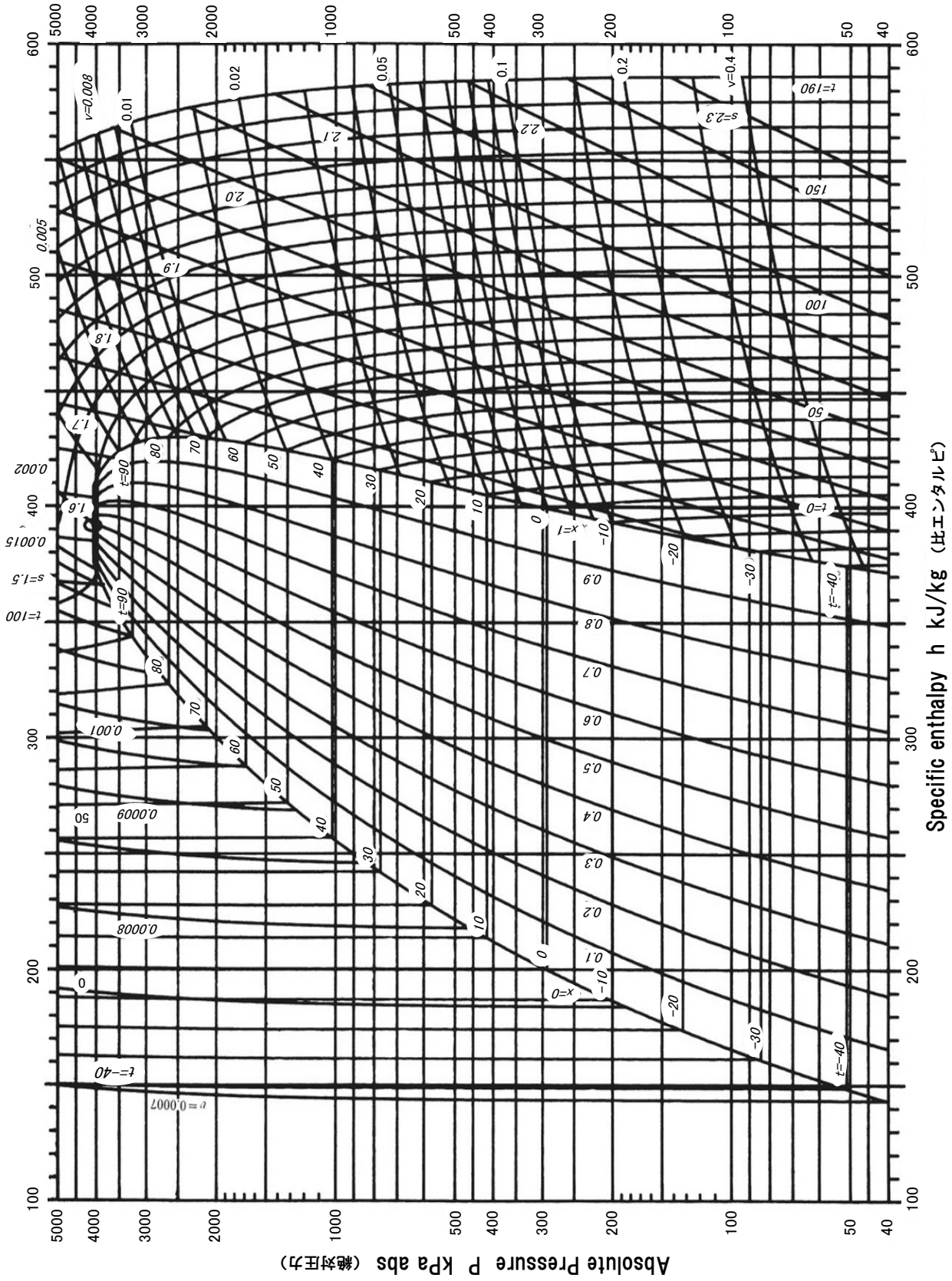

Characteristic table
for temperature sensor 1/2 **温度センサ特性表 1/2**

SS/RS/DSS/DRS/RSS/RRS/EIS/EOS/SGS/AMBS

Temperature 温度(℃)	Temperature 温度(°F)	Resistance 抵抗値(KΩ)	Temperature 温度(℃)	Temperature 温度(°F)	Resistance 抵抗値(KΩ)
+50	+122.0	0.985	+4	+39.2	5.747
+49	+120.2	1.018	+3	+37.4	6.004
+48	+118.4	1.054	+2	+35.6	6.275
+47	+116.6	1.090	+1	+33.8	6.560
+46	+114.8	1.128	+0	+32.0	6.860
+45	+113.0	1.167	−1	+30.2	7.176
+44	+111.2	1.208	−2	+28.4	7.508
+43	+109.4	1.251	−3	+26.6	7.857
+42	+107.6	1.296	−4	+24.8	8.226
+41	+105.8	1.342	−5	+23.0	8.614
+40	+104.0	1.390	−6	+21.2	9.023
+39	+102.2	1.441	−7	+19.4	9.454
+38	+100.4	1.493	−8	+17.6	9.909
+37	+98.6	1.548	−9	+15.8	10.39
+36	+97.0	1.605	−10	+14	10.89
+35	+95.0	1.665	−11	+12.2	11.43
+34	+93.2	1.727	−12	+10.4	11.99
+33	+91.4	1.791	−13	+8.6	12.59
+32	+89.6	1.859	−14	+6.8	13.22
+31	+87.8	1.929	−15	+5.0	13.88
+30	+86.0	2.003	−16	+3.2	14.59
+29	+84.2	2.080	−17	+1.4	15.33
+28	+82.4	2.160	−18	−0.4	16.12
+27	+80.6	2.244	−19	−2.2	16.95
+26	+78.8	2.331	−20	−4.0	17.83
+25	+77.0	2.423	−21	−5.8	18.76
+24	+75.2	2.519	−22	−7.6	19.75
+23	+73.4	2.619	−23	−9.4	20.80
+22	+71.6	2.724	−24	−11.2	21.91
+21	+69.8	2.833	−25	+13.0	23.08
+20	+68.0	2.948	−26	−14.8	24.33
+19	+66.2	3.068	−27	−16.6	25.66
+18	+64.4	3.193	−28	−18.4	27.06
+17	+62.6	3.325	−29	−20.2	28.56
+16	+60.8	3.463	−30	+22.0	30.15
+15	+59.0	3.607	−31	−23.8	31.83
+14	+57.2	3.758	−32	−25.6	33.63
+13	+55.4	3.917	−33	−27.4	35.53
+12	+53.6	4.083	−34	−29.2	37.56
+11	51.8	4.258	−35	−31.0	39.72
+10	+50.0	4.441	−36	−32.8	42.02
+9	+48.2	4.633	−37	−34.6	44.46
+8	+46.4	4.834	−38	−36.4	47.07
+7	+44.6	5.046	−39	−38.2	49.85
+6	+42.8	5.268	−40	+40.0	52.81
+5	+41.0	5.501			

Characteristic table
for temperature sensor 2/2
DCHS

温度センサ特性表 2/2
DCHS

Temperature 温度(℃)	Temperature 温度(°F)	Resistance 抵抗値(KΩ)	Temperature 温度(℃)	Temperature 温度(°F)	Resistance 抵抗値(KΩ)
72	162	32.783	102	216	12.566
74	165	30.629	104	219	11.835
76	169	28.635	106	223	11.153
78	172	26.787	108	226	10.515
80	176	25.073	110	230	9.919
82	180	23.482	112	234	9.361
84	183	22.005	114	237	8.840
86	187	20.633	116	241	8.351
88	190	19.358	118	244	7.894
90	194	18.171	120	248	7.465
92	198	17.066	122	252	7.063
94	201	16.037	124	255	6.685
96	205	15.078	126	258	6.331
98	208	14.184	128	262	5.998
100	212	13.350	130	266	5.686

For High pressure tranceducer
高圧圧力センサ特性表
HPT

Pressure 圧力 (kPa･G)	Out put Voltage 出力 (V)	Pressure 圧力 (kPa･G)	Out put Voltage 出力 (V)
0	0.50	1100	1.62
100	0.60	1200	1.72
200	0.70	1300	1.83
300	0.81	1400	1.93
400	0.91	1500	2.03
500	1.01	1600	2.13
600	1.11	1700	2.23
700	1.21	1800	2.34
800	1.32	1900	2.44
900	1.42	2000	2.54
1000	1.52	2100	2.64

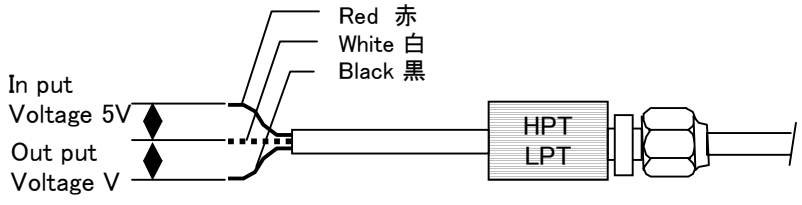

For Low pressure tranceducer
低圧圧力センサ特性表
LPT

Pressure 圧力 (kPa･G)	Out put Voltage 出力 (V)
−500	−1.03
−400	−0.72
−300	−0.42
−200	−0.11
−100	0.19
0	0.50
100	0.81
200	1.11
300	1.42
400	1.72
500	2.03
600	2.34
700	2.64
800	2.95
900	3.25
1000	3.56