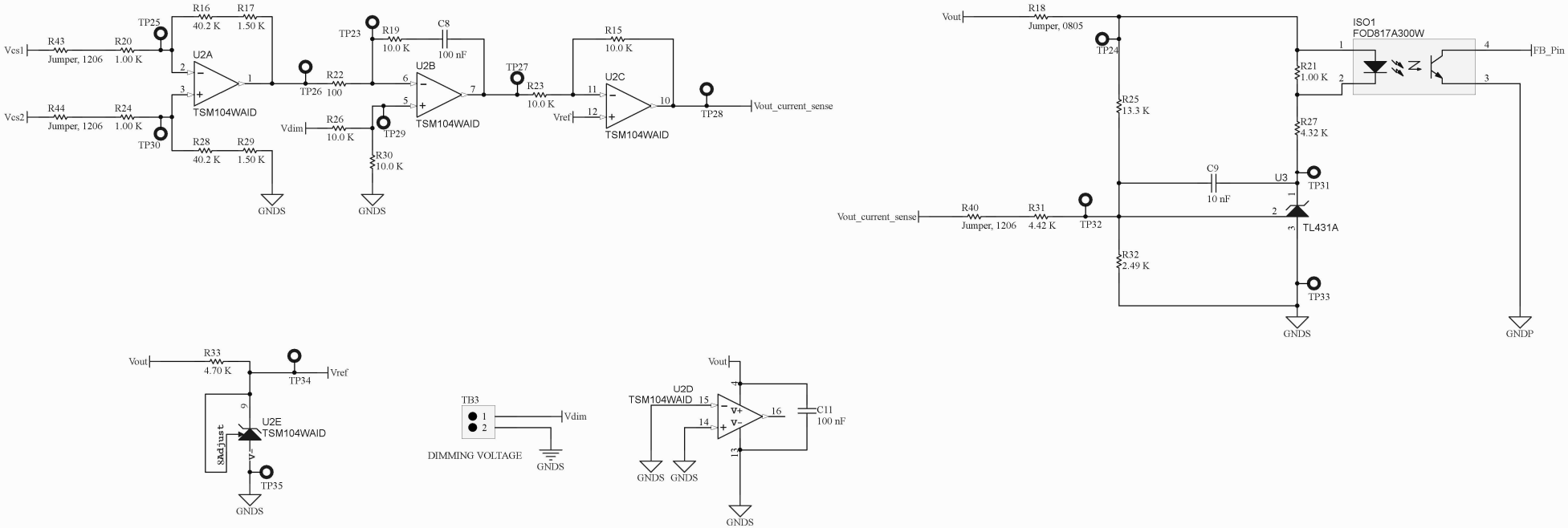

Title	***LED DRIVER SCHEMATIC***	
DWG No:		Rev:
Size: B		Sheet 1 of 2

File: C:\Users\Chinmay\OneDrive - UCB-O365\01_Project Lab\Patil_Final_Release_Package_20181202\Patil_PCB_20181208\Patil_PCBfiles