| Revision History | | | | | |
|---|---|---|---|---|---|
| REV | ZONE | DESCRIPTION | DRFT | DATE | PCO/ECO |
| 01 | ALL | INITIAL DRAFT/CREATION | | | |

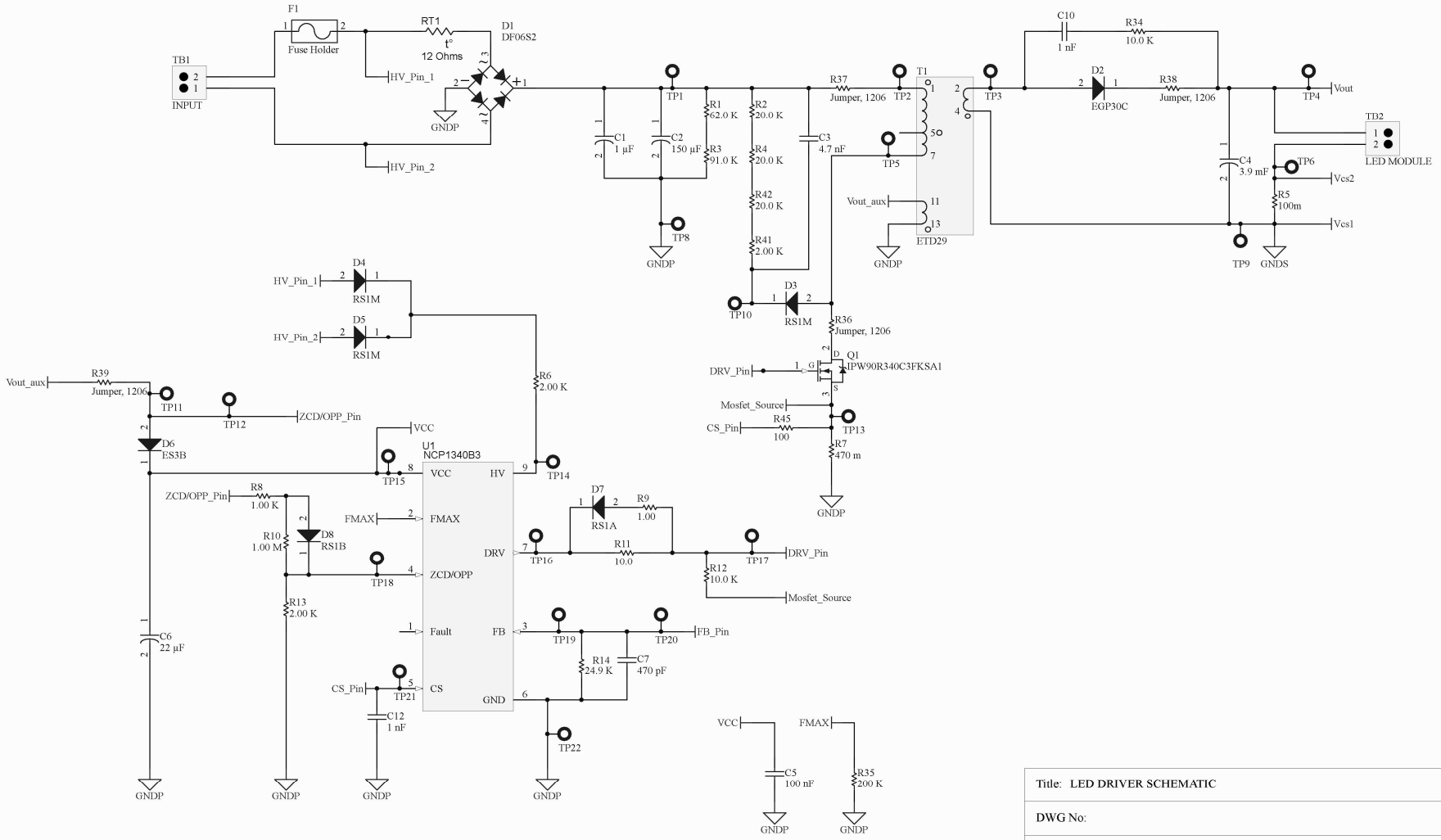


| | | | |
|---|---|---|---|
| Title: LED DRIVER SCHEMATIC | | | |
| DWG No: | | Rev: 3 | |
| Drawn: CHINMAY PATIL | | Date: 12/10/2018 | |
| Engr: CHINMAY PATIL | | Date: 12/10/2018 | |
| Size: B | | Sheet 1 of 2 | |

File: C:\Users\Chinmay\OneDrive - UCB-O365\01_Project Lab\Patil_Final_Release_Package_20181202\Patil_PCB_20181208\Patil_PCBfiles