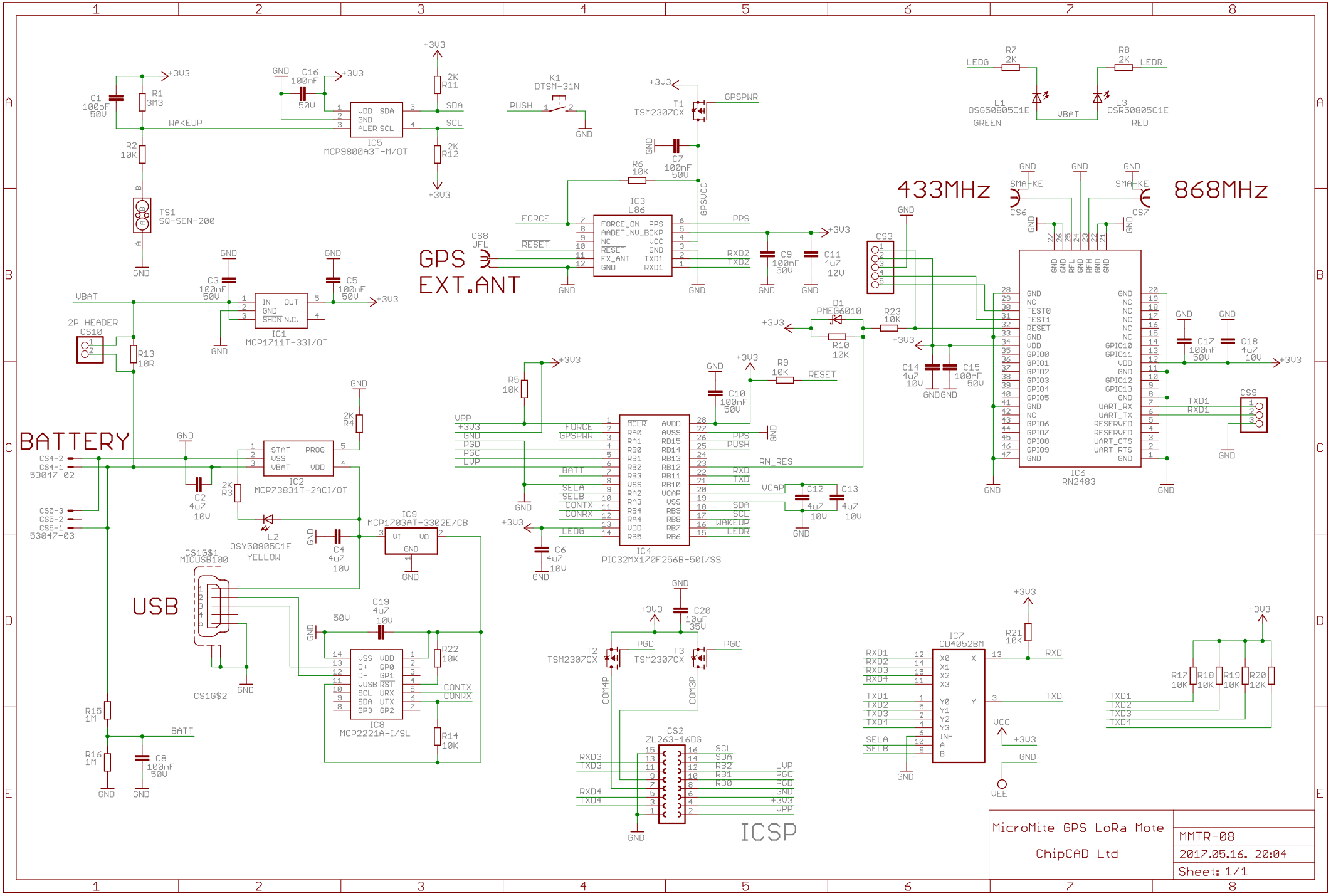
BATTERY
USB
GPS
EXT.ANT
433MHz
868MHz
ICSP
IC1 MCP1711T-33I/OT
IC2 MCP73831T-2ACI/OT
IC3 L86
IC4 PIC32MX170F256B-50I/SS
IC5 MCP9800A3T-M/OT
IC6 RN2483
IC7 CD4052BM
IC8 MCP2221A-I/SL
IC9 MCP1703AT-3302E/CB
T1 TSM2307CX
T2 TSM2307CX
T3 TSM2307CX
K1 DTSM-31N
TS1 SQ-SEN-200
CS2 ZL263-16DG
CS8 UFL
CS9
CS10 2P HEADER
CS1G$1 MICUSB100
CS1G$2
CS4-2
CS4-1
53047-02
CS5-3
CS5-2
CS5-1
53047-03
L1 OSG50805C1E GREEN
L2 OSY50805C1E YELLOW
L3 OSR50805C1E RED
D1 PMEG6010
MicroMite GPS LoRa Mote
ChipCAD Ltd
MMTR-08
2017.05.16. 20:04
Sheet: 1/1