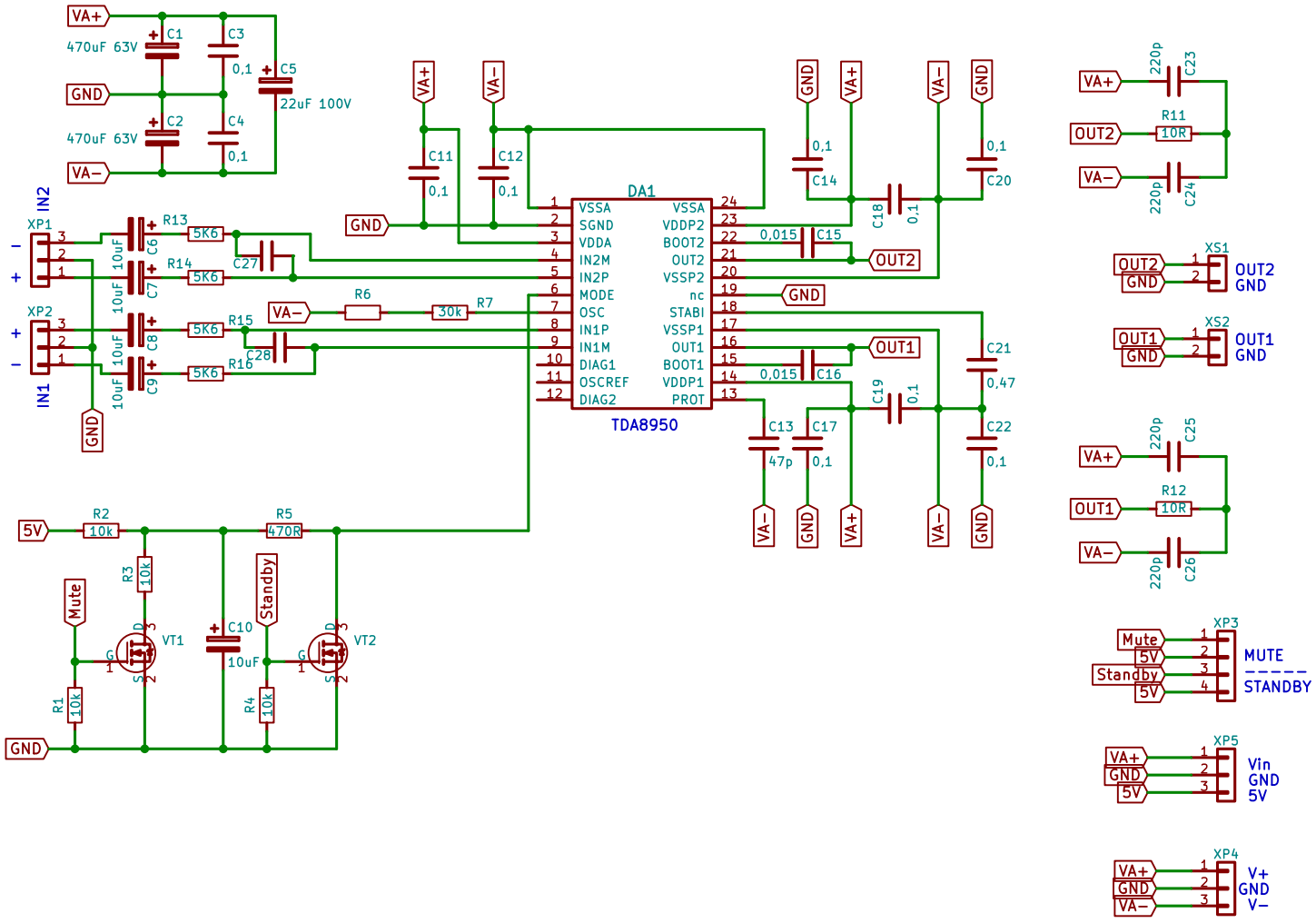
VA+
VA−
GND
5V
470uF 63V
C1
C2
C3
C4
C5
0,1
22uF 100V
C6
C7
C8
C9
10uF
R13
R14
R15
R16
5K6
C27
C28
R6
R7
30k
XP1
XP2
IN1
IN2
R2
10k
R3
R1
R4
R5
470R
Mute
Standby
VT1
VT2
C10
C11
C12
DA1
TDA8950
VSSA
SGND
VDDA
IN2M
IN2P
MODE
OSC
IN1P
IN1M
DIAG1
OSCREF
DIAG2
VDDP2
BOOT2
OUT2
VSSP2
nc
STABI
VSSP1
OUT1
BOOT1
VDDP1
PROT
C14
C15
C16
C17
C18
C19
C20
C21
C22
C13
47p
0,015
0,47
C23
C24
C25
C26
R11
R12
XS1
XS2
XP3
XP5
XP4
MUTE
STANDBY
Vin
V+
V−