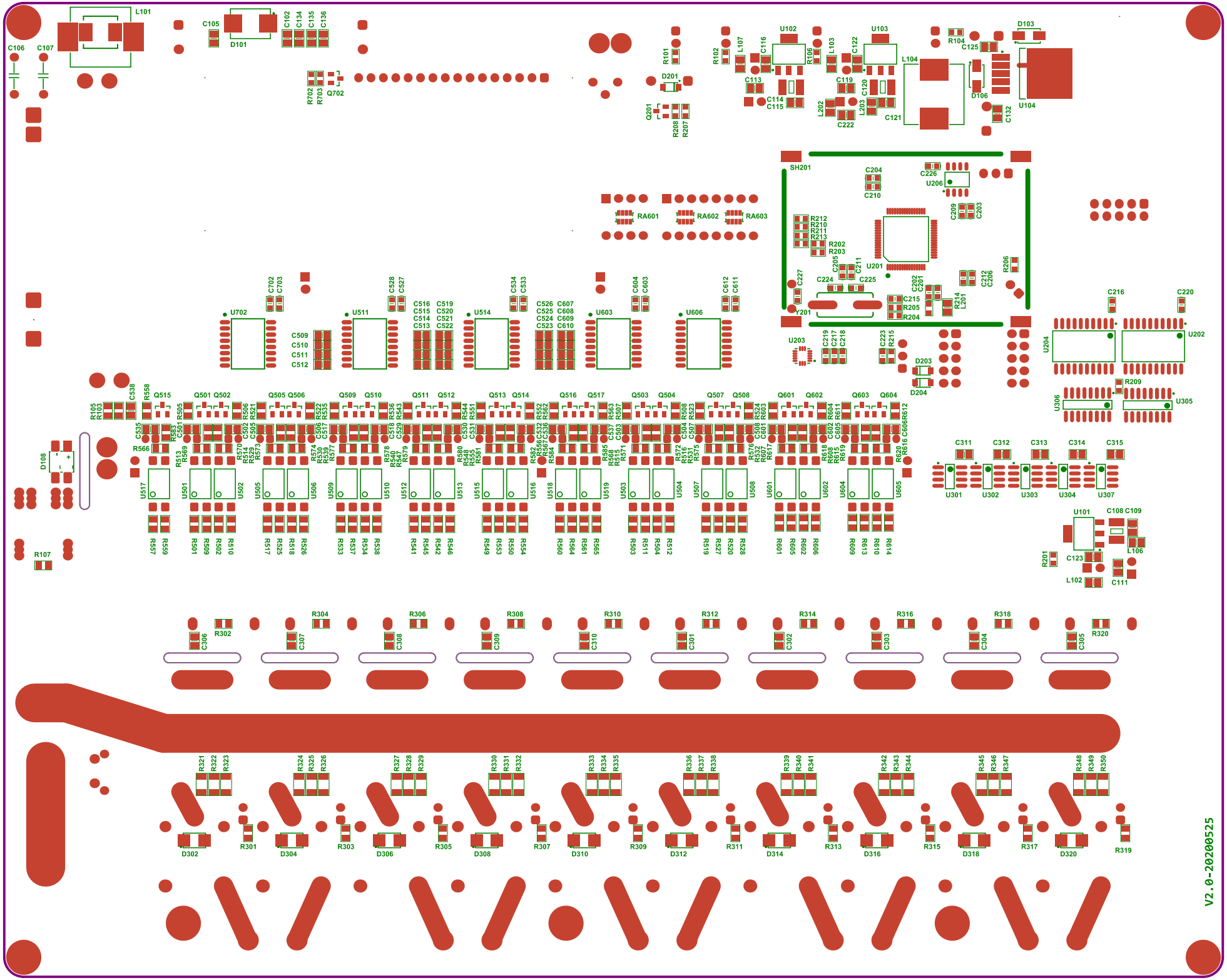
L101
C106
C107
C105
D101
C102
C134
C135
C136
R702
R703
Q702
R101
D201
Q201
R208
R207
R102
L107
C116
U102
R106
L103
C122
U103
R104
C125
D103
L104
C113
C114
C115
C119
C120
L202
C222
L203
C121
D106
C132
U104
SH201
C204
C210
C226
U206
C209
C203
RA601
RA602
RA603
R212
R210
R211
R213
R202
R203
C205
C211
U201
R206
C227
C224
C225
C202
C201
C212
C206
Y201
C215
R205
R204
R214
L201
U203
C219
C217
C218
C223
R215
D203
D204
C216
C220
U204
U202
R209
U306
U305
C702
C703
U702
C509
C510
C511
C512
C528
C527
U511
C516
C515
C514
C513
C519
C520
C521
C522
C534
C533
U514
C526
C525
C524
C523
C607
C608
C609
C610
C604
C603
U603
C612
C611
U606
R105
R103
C538
R558
Q515
Q501
Q502
Q505
Q506
Q509
Q510
Q511
Q512
Q513
Q514
Q516
Q517
Q503
Q504
Q507
Q508
Q601
Q602
Q603
Q604
C535
R566
R583
C501
R505
R569
R570
C502
R506
R514
C503
R521
R573
R574
C506
R522
R530
C517
R335
R539
R577
R578
C518
R536
R540
C529
R543
R547
R579
R580
C530
R544
R548
C531
R551
R581
R582
R556
C532
R567
C536
R562
R584
R585
R563
C537
R568
R507
R515
C503
R571
R572
R504
R516
C504
R508
C507
R523
R575
R576
C508
R524
R532
C601
R607
R577
R618
R604
C602
R612
R615
C605
R619
R620
R616
C606
R612
D108
U517
U501
U502
U505
U506
U509
U510
U512
U513
U515
U516
U518
U519
U503
U504
U507
U508
U601
U602
U604
U605
R557
R559
R501
R509
R502
R510
R517
R525
R518
R526
R533
R537
R534
R538
R541
R545
R542
R546
R549
R553
R550
R554
R560
R564
R561
R565
R503
R511
R504
R512
R519
R527
R520
R528
R601
R605
R602
R606
R609
R613
R610
R614
R107
C311
C312
C313
C314
C315
U301
U302
U303
U304
U307
U101
C108
C109
L106
R201
C123
L102
C111
R304
R306
R308
R310
R312
R314
R316
R318
R302
C306
C307
C308
C309
C310
C301
C302
C303
C304
C305
R320
R321
R322
R323
R324
R325
R326
R327
R328
R329
R330
R331
R332
R333
R334
R335
R336
R337
R338
R339
R340
R341
R342
R343
R344
R345
R346
R347
R348
R349
R350
D302
R301
D304
R303
D306
R305
D308
R307
D310
R309
D312
R311
D314
R313
D316
R315
D318
R317
D320
R319
V2.0-20200525

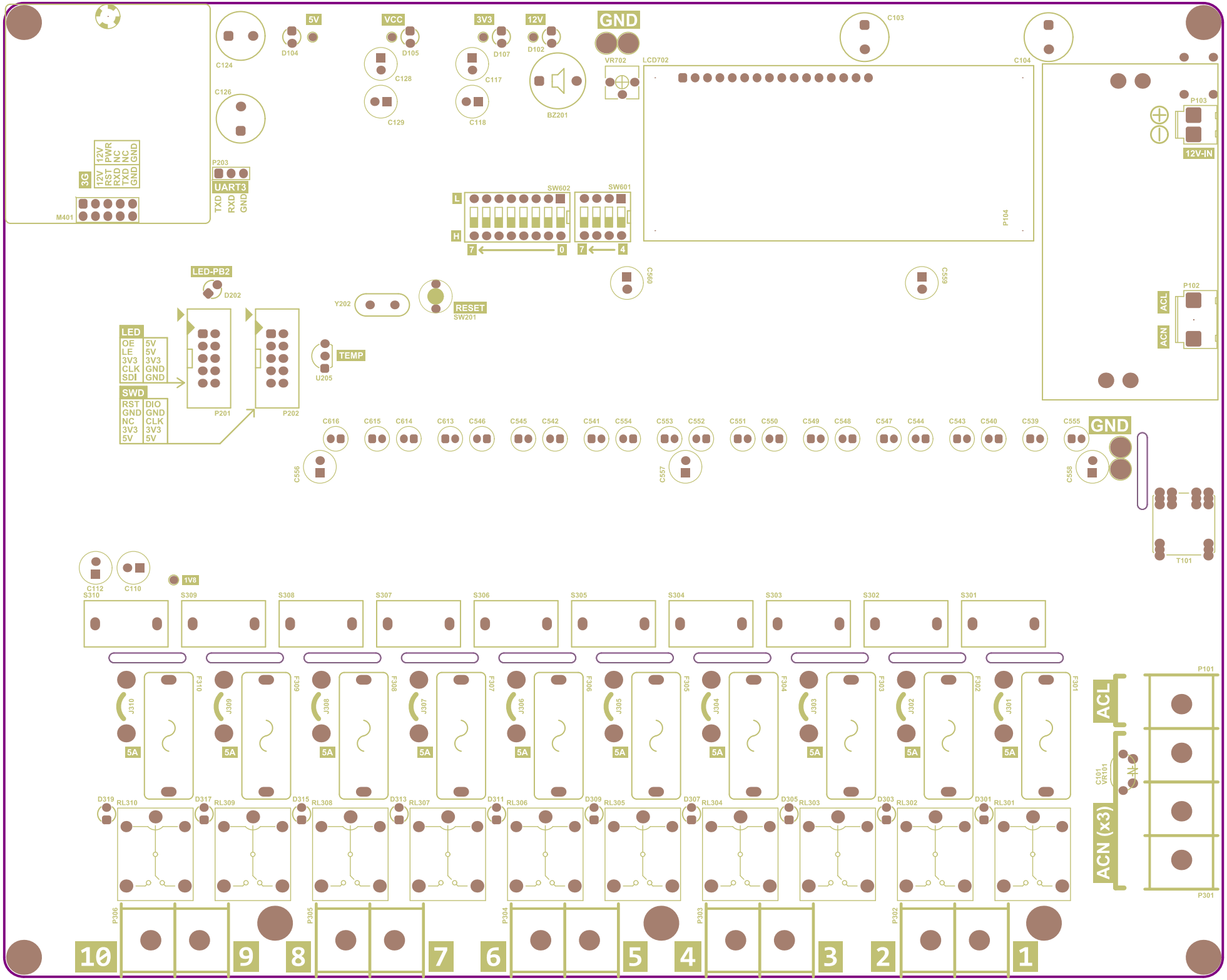
5V
VCC
3V3
12V
GND
C103
C104
C124
D104
D105
D107
D102
C128
C117
C126
C129
C118
BZ201
VR702
LCD702
P103
12V-IN
3G
12V
RST
RXD
TXD
GND
12V
PWR
NC
NC
GND
M401
P203
UART3
TXD
RXD
GND
SW602
SW601
L
H
7
0
7
4
P104
C560
C559
LED-PB2
D202
Y202
RESET
SW201
P102
ACL
ACN
LED
OE
LE
3V3
CLK
SDI
5V
5V
3V3
GND
GND
SWD
RST
GND
NC
3V3
5V
DIO
GND
CLK
3V3
5V
P201
P202
TEMP
U205
C616
C615
C614
C613
C546
C545
C542
C541
C554
C553
C552
C551
C550
C549
C548
C547
C544
C543
C540
C539
C555
GND
C556
C557
C558
T101
C112
C110
1V8
S310
S309
S308
S307
S306
S305
S304
S303
S302
S301
F310
F309
F308
F307
F306
F305
F304
F303
F302
F301
J310
J309
J308
J307
J306
J305
J304
J303
J302
J301
5A
D319
RL310
D317
RL309
D315
RL308
D313
RL307
D311
RL306
D309
RL305
D307
RL304
D305
RL303
D303
RL302
D301
RL301
ACL
C101
VR101
ACN (x3)
P101
P301
P306
P305
P304
P303
P302
10
9
8
7
6
5
4
3
2
1

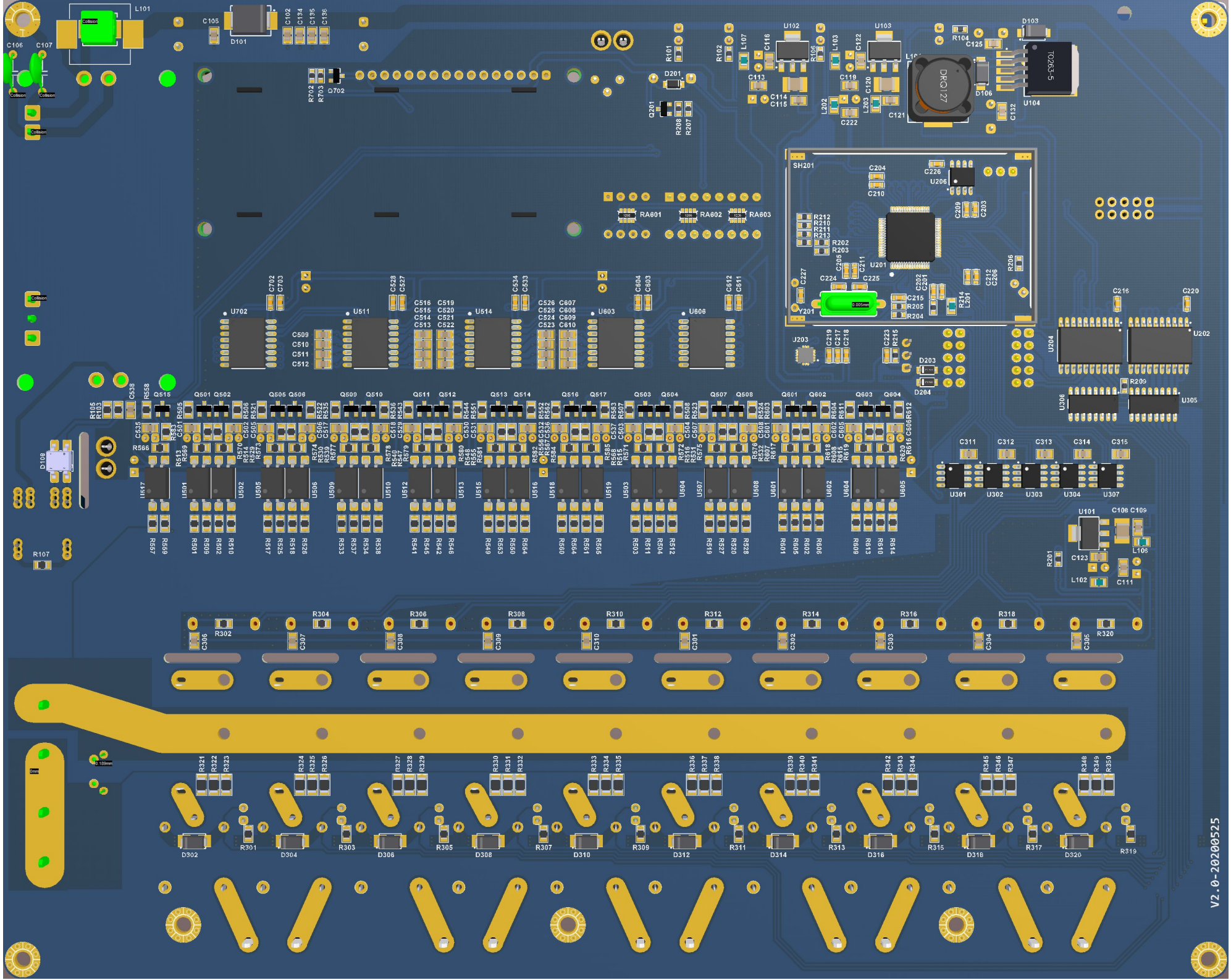
V2.0-20200525

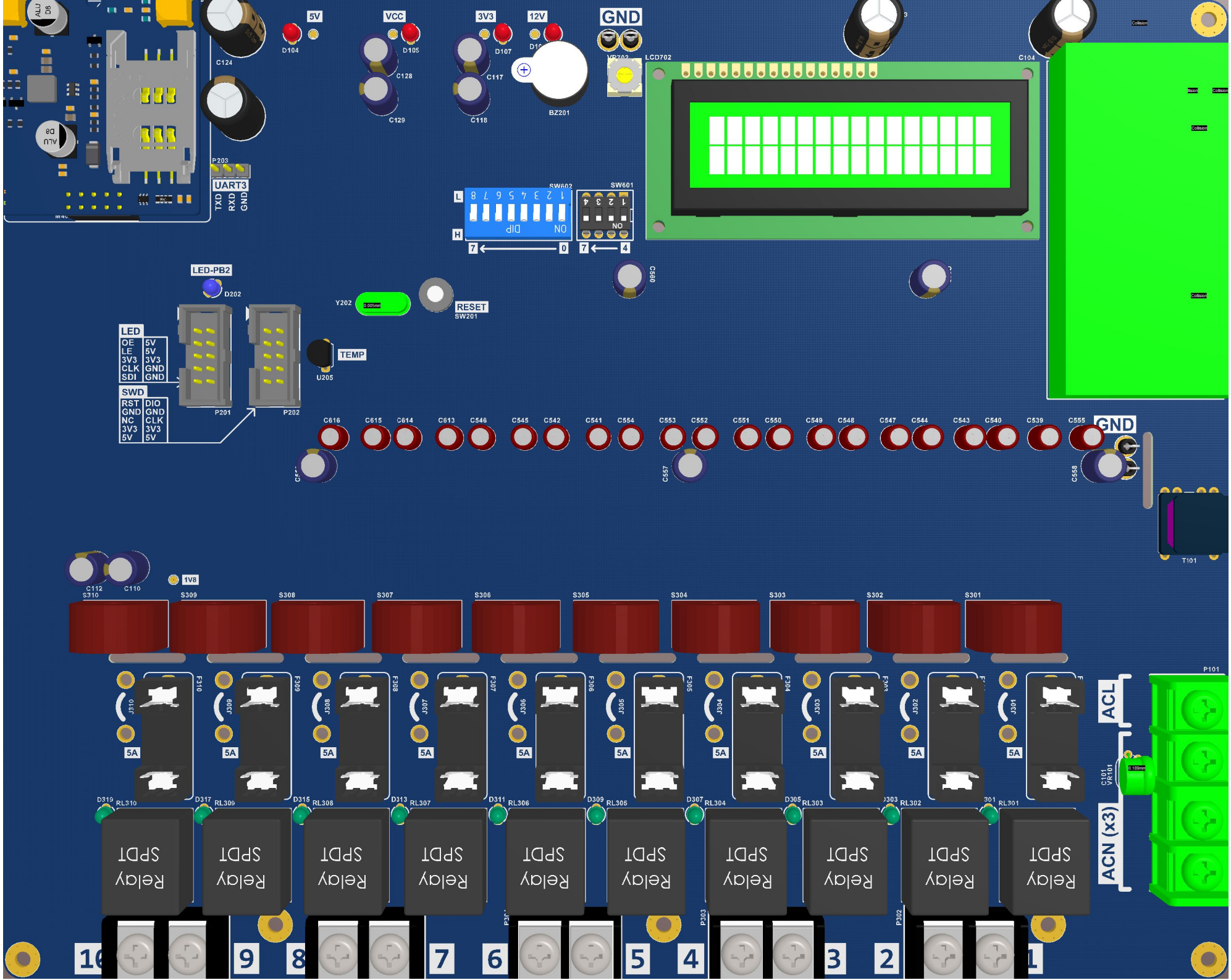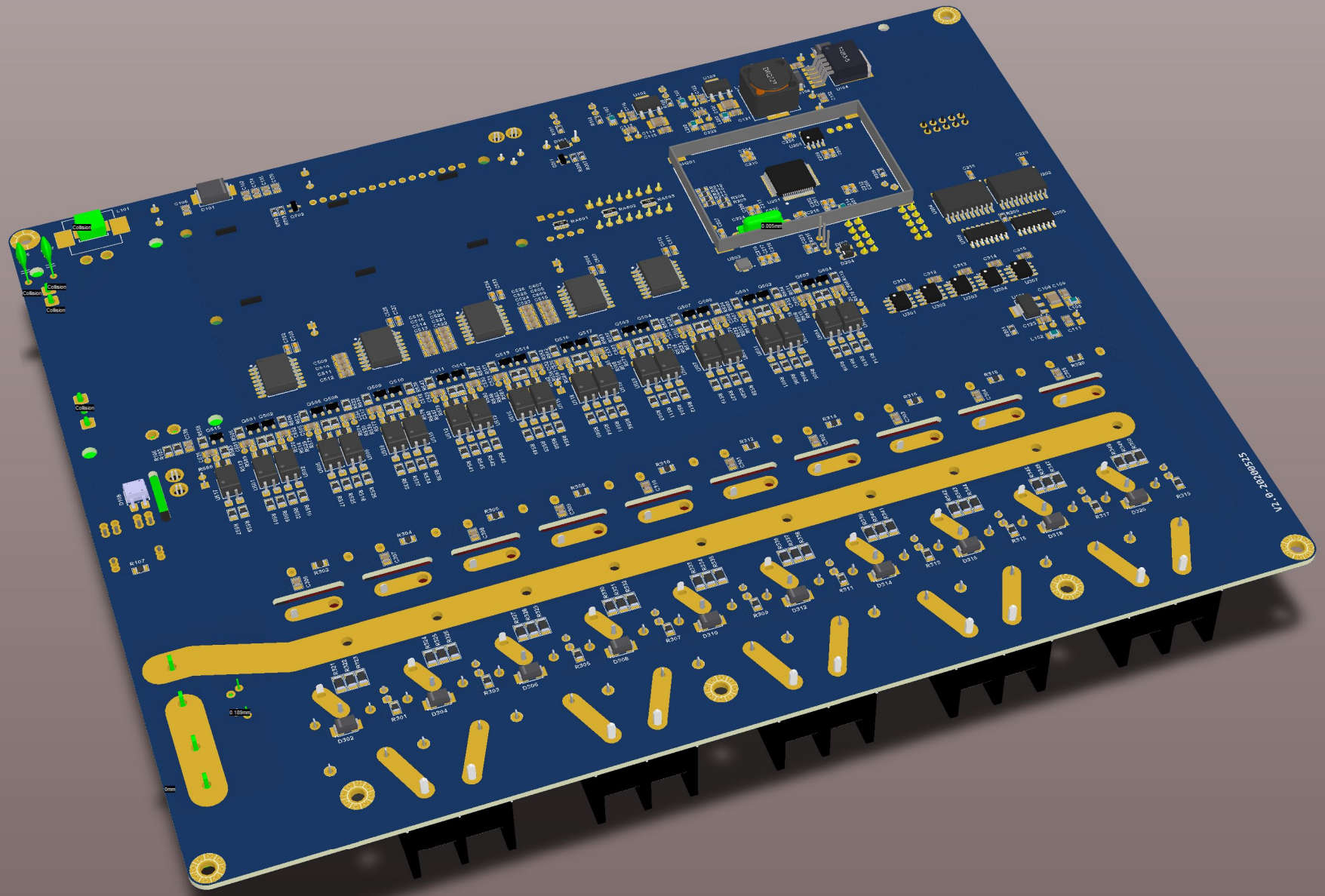
5V
VCC
3V3
12V
GND
D104
D105
D107
C124
C128
C129
C117
C118
BZ201
LCD702
C104
P203
UART3
TXD
RXD
GND
SW602
SW601
Dip
ON
NO
LED-PB2
D202
Y202
RESET
SW201
C560
LED
OE 5V
LE 5V
3V3 3V3
CLK GND
SDI GND
SWD
RST DIO
GND GND
NC CLK
3V3 3V3
5V 5V
P201
P202
TEMP
U205
C616 C615 C614 C613 C546 C545 C542 C541 C554 C553 C552 C551 C550 C549 C548 C547 C544 C543 C540 C539 C555
C557
C558
T101
C112
C110
1V8
S310 S309 S308 S307 S306 S305 S304 S303 S302 S301
J310 J309 J308 J307 J306 J305 J304 J303 J302 J301
F310 F309 F308 F307 F306 F305 F304
5A
D319 RL310 D317 RL309 D315 RL308 D313 RL307 D311 RL306 D309 RL305 D307 RL304 D305 RL303 RL302 RL301
Relay SPDT
P101
ACL
ACN (x3)
C101
VR101
16 9 8 7 6 5 4 3 2 1