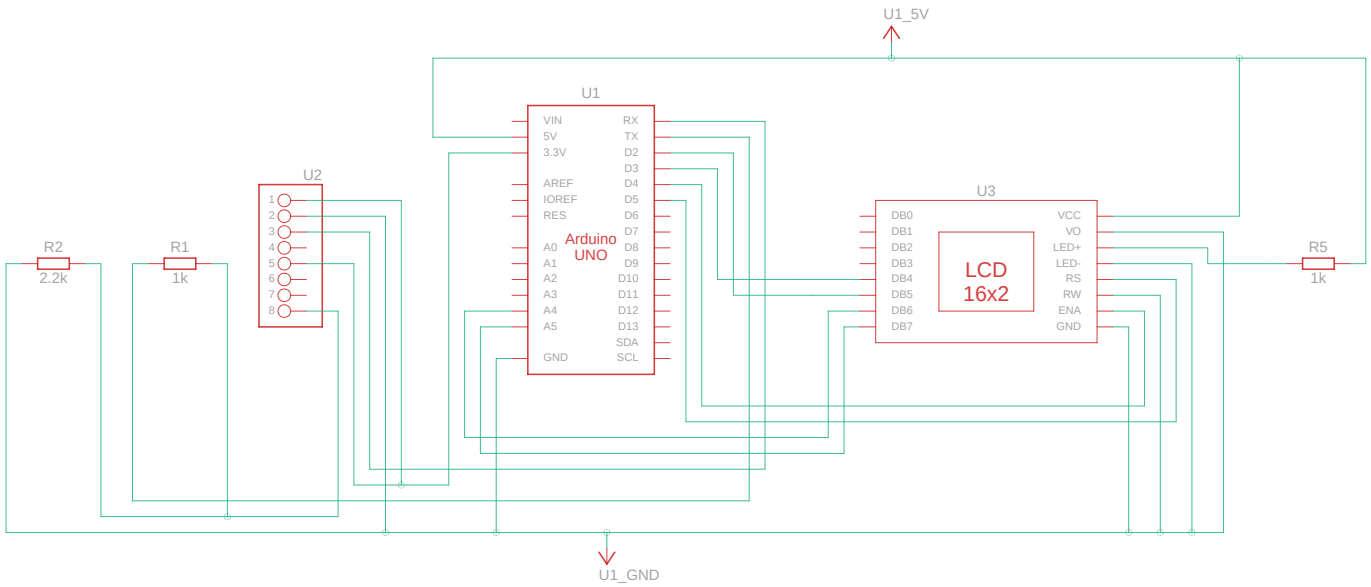

Made with Tinkercad®

Title: Smart Baggage Tracker using IoT	
Date: 2/6/2024, 6:31:07 PM	Sheet: 1/1