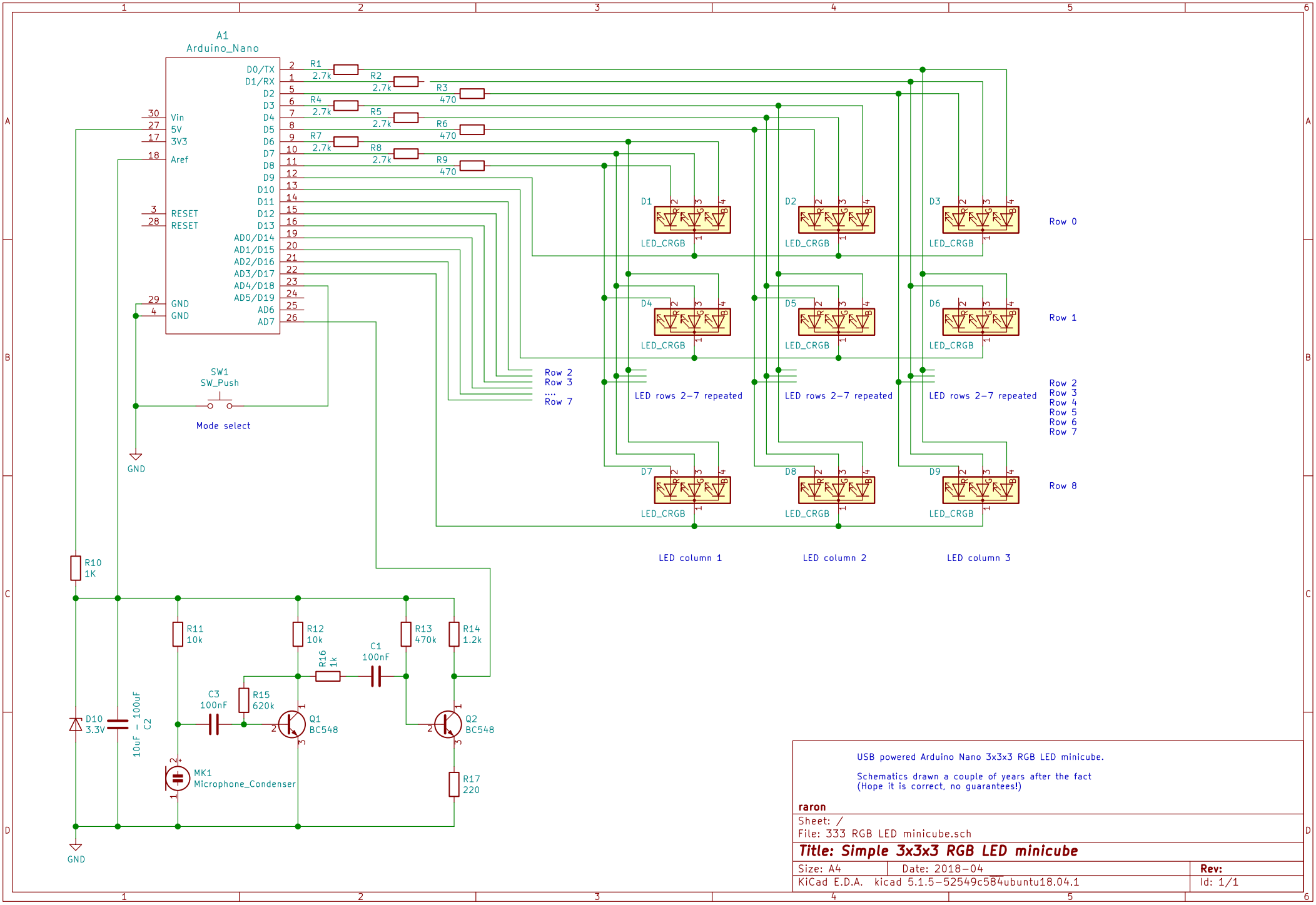

USB powered Arduino Nano 3x3x3 RGB LED minicube.

Schematics drawn a couple of years after the fact
(Hope it is correct, no guarantees!)

raron

Sheet: /
File: 333 RGB LED minicube.sch

Title: Simple 3x3x3 RGB LED minicube

Size: A4	Date: 2018-04	**Rev:**
KiCad E.D.A. kicad 5.1.5-52549c584ubuntu18.04.1		Id: 1/1