RevNo	Revision note	Date	Signature	Checked

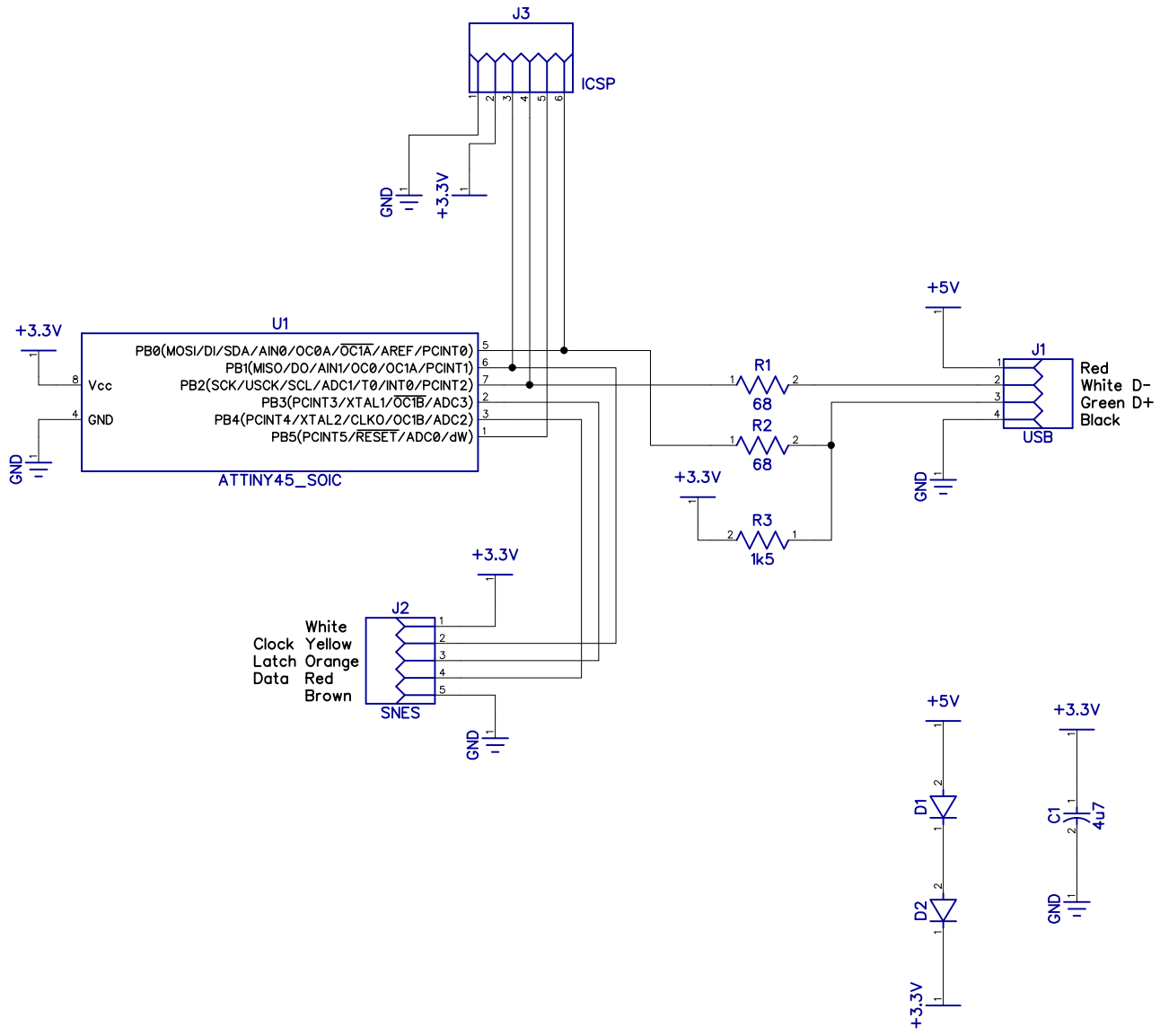

Itemref	Quantity	Title/Name, designation, material, dimension etc	Article No./Reference

Designed by	Checked by	Approved by - date	File name	Date	Scale
S. Reig	XXXX	XXXX - 00/00/00	snes2usb.dch	28/09/12	1:1

KungFu Labs

SNES2USB

Edition	Sheet
A	1/1