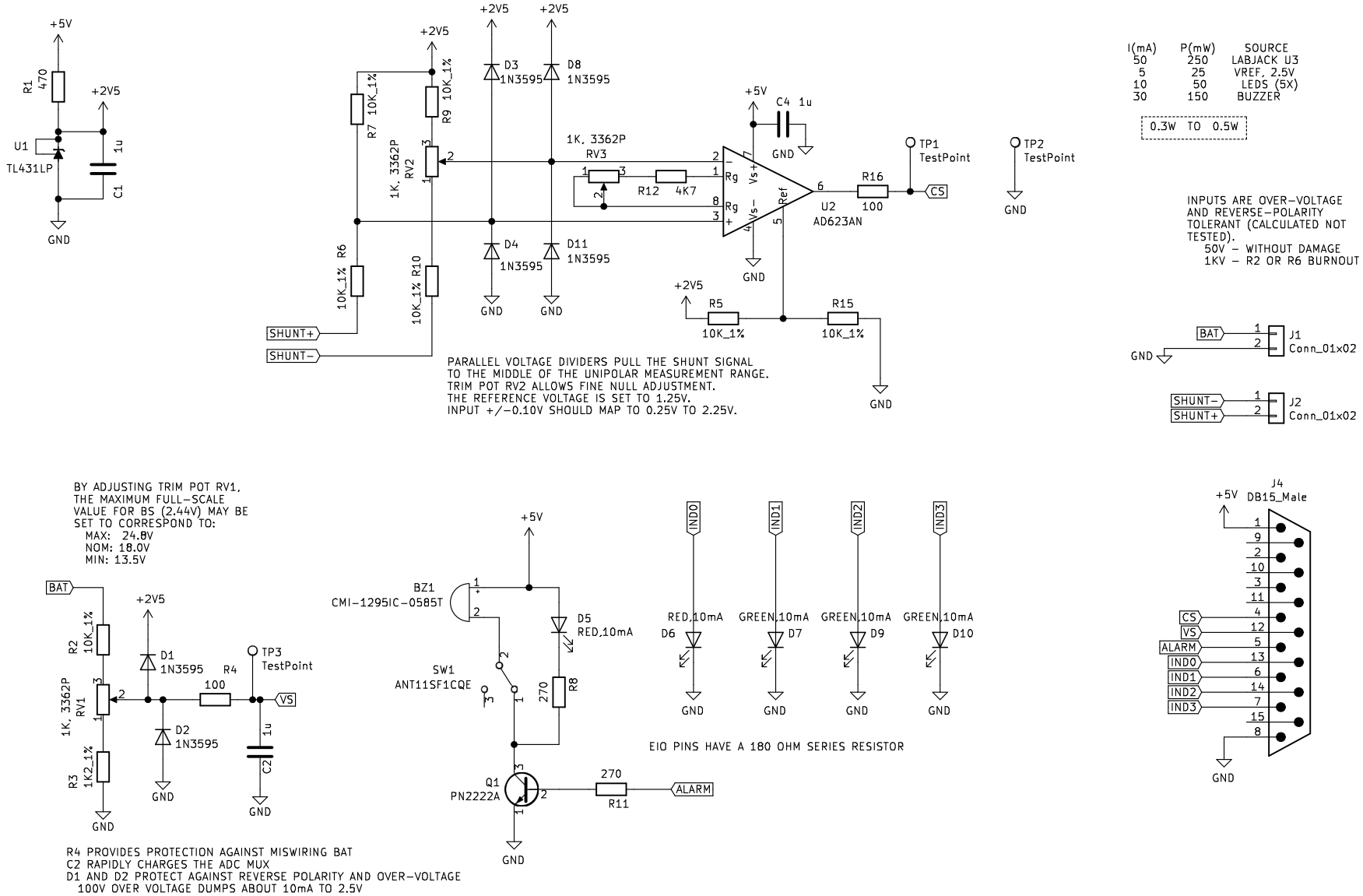

Sheet: /
File: battery.sch

Title: Battery Status Monitor

Size: A	Date:	Rev:
KiCad E.D.A. kicad 5.1.5+dfsg1−2build2		Id: 1/1