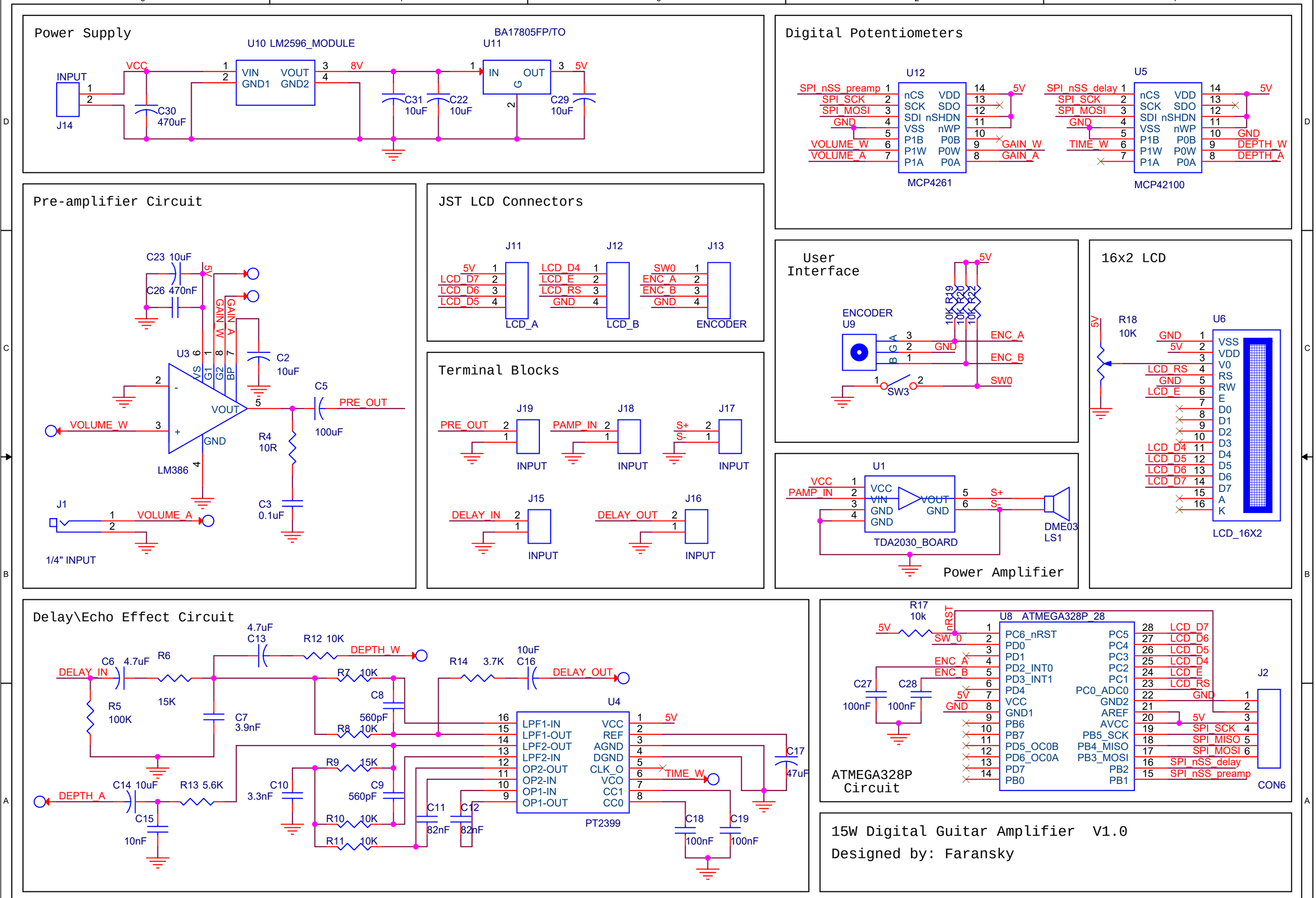
Power Supply
U10 LM2596_MODULE
BA17805FP/TO
U11
INPUT
J14
VCC
VIN
VOUT
GND1
GND2
8V
IN
OUT
G
5V
C30
470uF
C31
10uF
C22
10uF
C29
10uF
Digital Potentiometers
U12
SPI_nSS_preamp
SPI_SCK
SPI_MOSI
GND
VOLUME_W
VOLUME_A
nCS
SCK
SDI
VSS
P1B
P1W
P1A
VDD
SDO
nSHDN
nWP
P0B
P0W
P0A
GAIN_W
GAIN_A
MCP4261
U5
SPI_nSS_delay
TIME_W
DEPTH_W
DEPTH_A
MCP42100
Pre-amplifier Circuit
C23 10uF
C26 470nF
U3
LM386
VS
G1
G2
BP
VOUT
GND
C2
10uF
C5
100uF
PRE_OUT
R4
10R
C3
0.1uF
J1
1/4" INPUT
JST LCD Connectors
J11
J12
J13
LCD_D7
LCD_D6
LCD_D5
LCD_E
LCD_RS
ENC_A
ENC_B
SW0
LCD_A
LCD_B
ENCODER
Terminal Blocks
J19
J18
J17
PAMP_IN
S+
S-
INPUT
J15
J16
DELAY_IN
DELAY_OUT
User Interface
ENCODER
U9
R19
R20
R21
R22
10K
SW3
16x2 LCD
R18
10K
U6
VSS
VDD
V0
RS
RW
E
D0
D1
D2
D3
D4
D5
D6
D7
A
K
LCD_16X2
U1
TDA2030_BOARD
DME03
LS1
Power Amplifier
Delay\Echo Effect Circuit
C6 4.7uF
R6
15K
R5
100K
C7
3.9nF
C13
4.7uF
R12 10K
R7 10K
C8
560pF
R8 10K
R14 3.7K
C16
10uF
U4
LPF1-IN
LPF1-OUT
LPF2-OUT
LPF2-IN
OP2-OUT
OP2-IN
OP1-IN
OP1-OUT
VCC
REF
AGND
DGND
CLK_O
VCO
CC1
CC0
PT2399
C17
47uF
C14 10uF
R13 5.6K
C15
10nF
C10
3.3nF
R9 15K
C9
560pF
R10 10K
R11 10K
C11
82nF
C12
82nF
C18
100nF
C19
100nF
ATMEGA328P Circuit
R17
10k
U8 ATMEGA328P_28
PC6_nRST
PD0
PD1
PD2_INT0
PD3_INT1
PD4
VCC
GND1
PB6
PB7
PD5_OC0B
PD6_OC0A
PD7
PB0
PC5
PC4
PC3
PC2
PC1
PC0_ADC0
GND2
AREF
AVCC
PB5_SCK
PB4_MISO
PB3_MOSI
PB2
PB1
C27
100nF
C28
100nF
J2
CON6
15W Digital Guitar Amplifier V1.0
Designed by: Faransky