SMDK2410 Board (S3C2410 Reference Board)

PCB Revision	Date	Description
Ver : 1.0 (20020417)	April 17, 2002	First release version (Production for Customer)
Ver : 1.1 (20020509)	May 09, 2002	1. Sheet 2 (Coordinate B5) , 3 (B4) , 10 (D5) : SD card(CON11) function add CD(Card Detect) and WP(Write Protect) -> Add R169 (Unload), R170 (0), R171 (4.7K) 2. Sheet 1 (Coordinate D3, C5) , 2 (C5) : Add damping resister to SDRAM signal.(LSCLK0 10 ohm, LnWE/LnGCS6/LnSCAS/LnSRAS/LADDR2,3,4 22 ohm : R172 10 ohm , R173 ~ R179 22 ohm)
Ver : 1.2 (20020603)	June 03, 2002	1. Sheet 2 (Coordinate C5) : U1B-F14 is changed from TP2 (Probe SCLK1) to LSCLK1 signal -> Add R180 (10 ohm) 2. Sheet 4 (Coordinate C3) : U9-38 is changed from LSCLK0 signal to LSCLK1 signal 3. Sheet 8 (Coordinate A4,B4) : R167, R168 is changed from 0 ohm to 4.7K, and C187,C188 is changed from unload to 1nF.
Ver : 1.3 (20020703)	July 03, 2002	1. Sheet 2,5 (Coordinate B5,C4) : Changed, J2 2Pin ---> 3Pin 2. Sheet 10 (Coordinate D5) : Deleted, R106, R107, R109, R113 ~ R115 (0 ohm) 3. Sheet 10 (Coordinate D5) : Added, R181 ~ R186 (10Kohm)

Title	SMDK2410X (S3C2410X DEMO BOARD)	
Size A3	Document Number Revision History	Rev 1.3
Date: Monday, August 19, 2002	Sheet 0 of 12	

NOTE!!!
Lxxxx signals should be routed as short as possible.

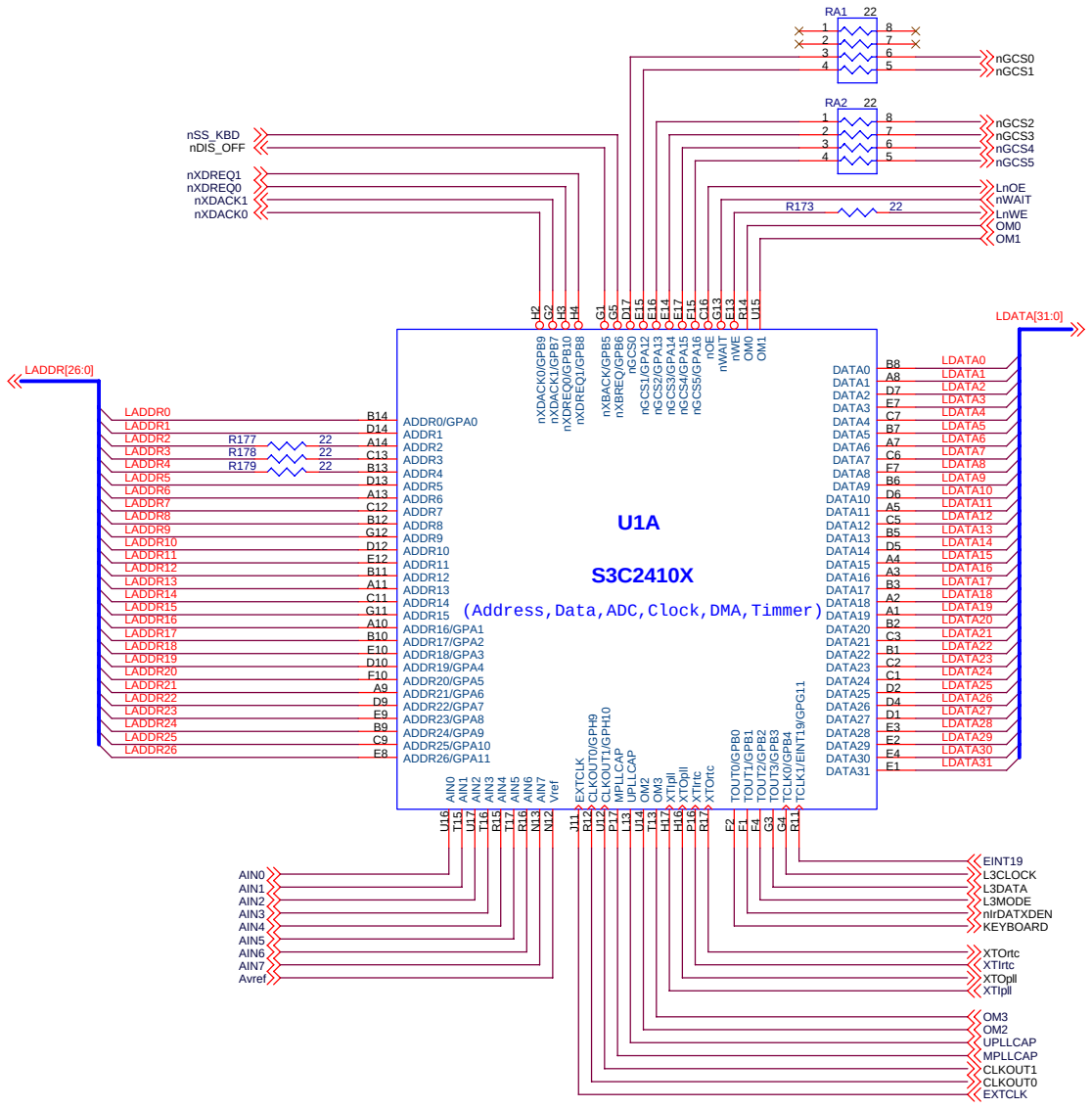

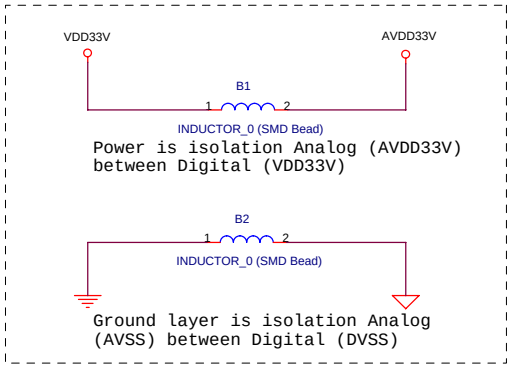

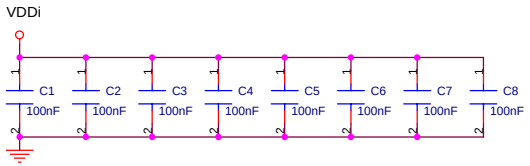

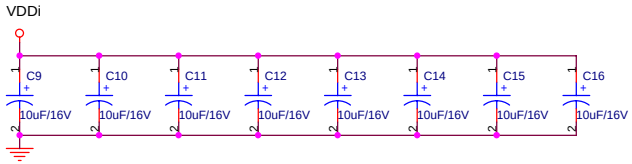

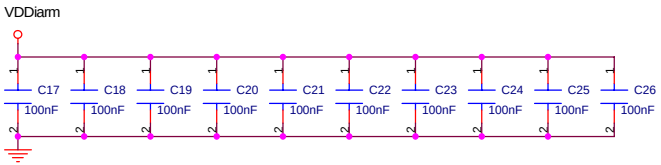

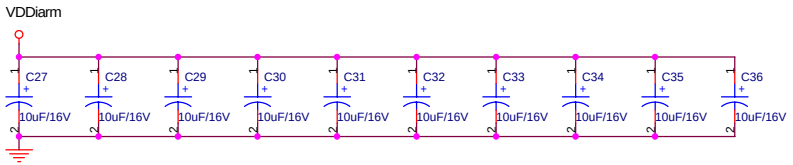

SAMSUNG ELECTRONICS CO.,LTD		
Title: SMDK2410X (S3C2410X DEMO BOARD)		
Size: A3	Document Number: MCU (ADDR/DATA/ADC/CLOCK/TIMMER/INT/RESET/POWER)	Rev: 1.3
Date: Monday, August 19, 2002	Sheet 1 of 12	

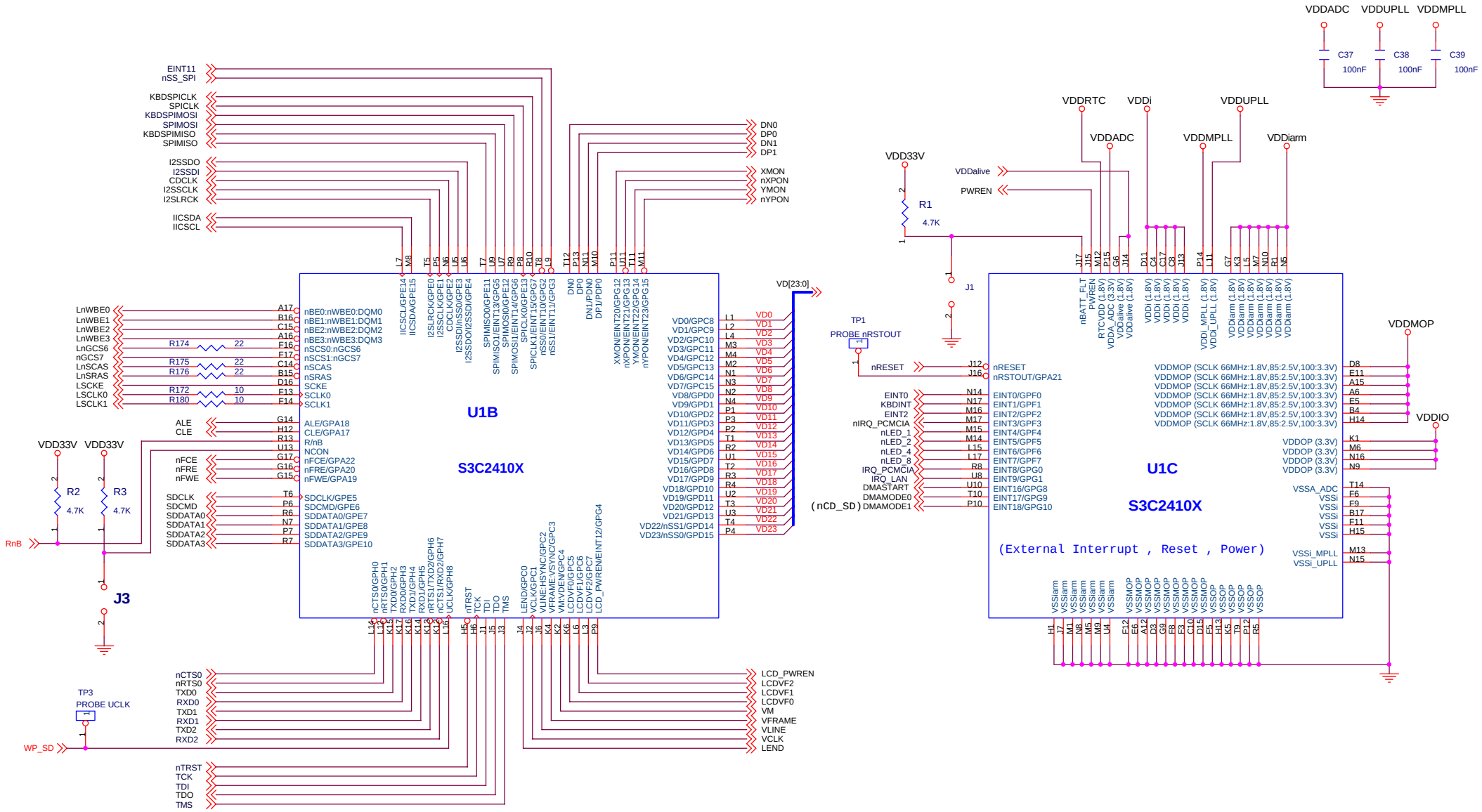

Address Step J3 (NCON)	NAND Flash Configuration
0	512 Byte/Page , 3 Step Addressing
1	512 Byte/Page , 4 Step Addressing

SAMSUNG ELECTRONICS CO.,LTD

Title: SMDK2410X (S3C2410X DEMO BOARD)

Size: A3 | Document Number: MCU (LCD/JTAG/UART/USB/NAND/MMC/UART/USB/SPI/MEMORY) | Rev: 1.3

Date: Monday, August 19, 2002 | Sheet 2 of 12

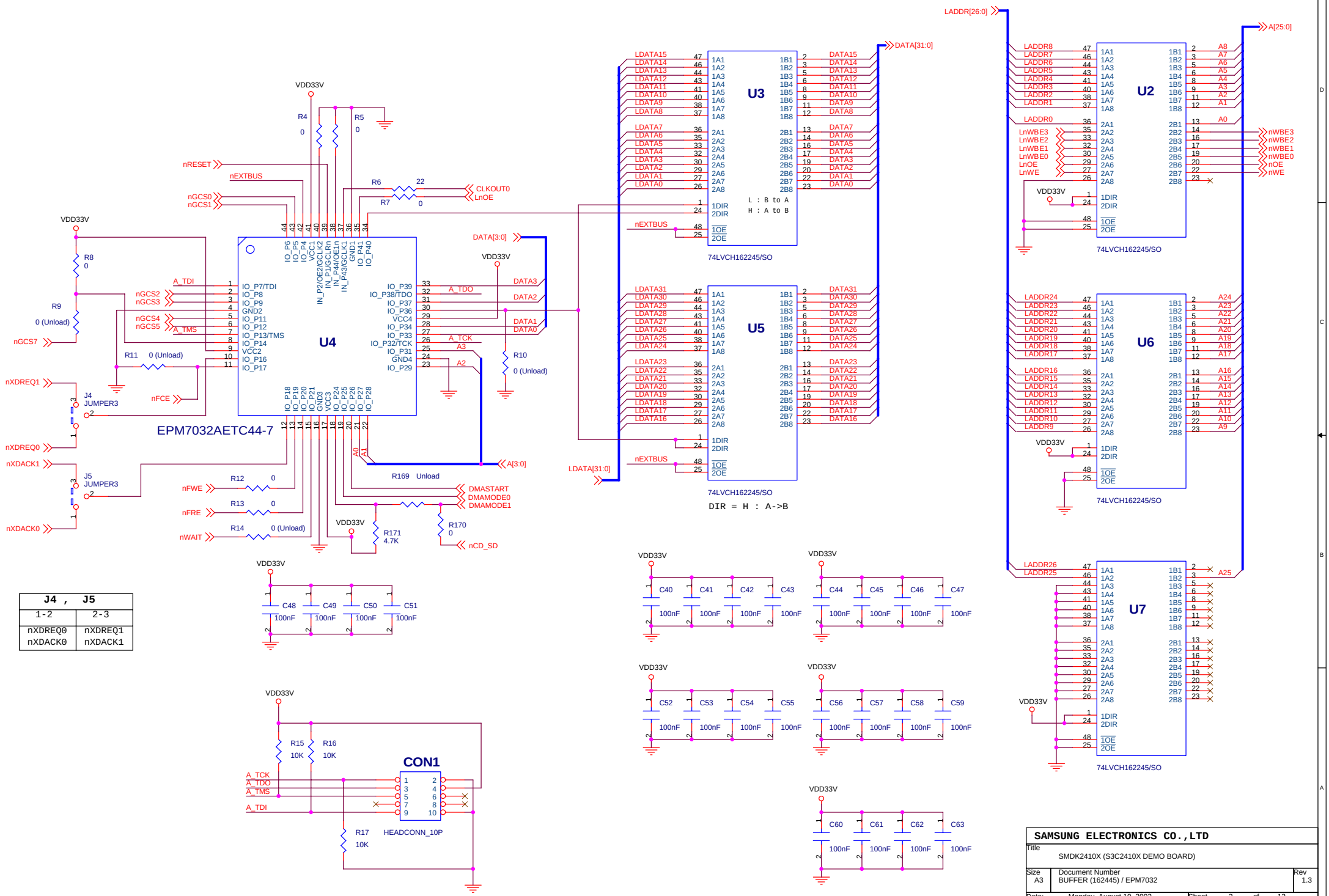

J4 , J5	
1-2	2-3
nXDREQ0	nXDREQ1
nXDACK0	nXDACK1

SAMSUNG ELECTRONICS CO.,LTD	
Title	SMDK2410X (S3C2410X DEMO BOARD)
Size A3	Document Number BUFFER (162445) / EPM7032 — Rev 1.3
Date: Monday, August 19, 2002	Sheet 3 of 12

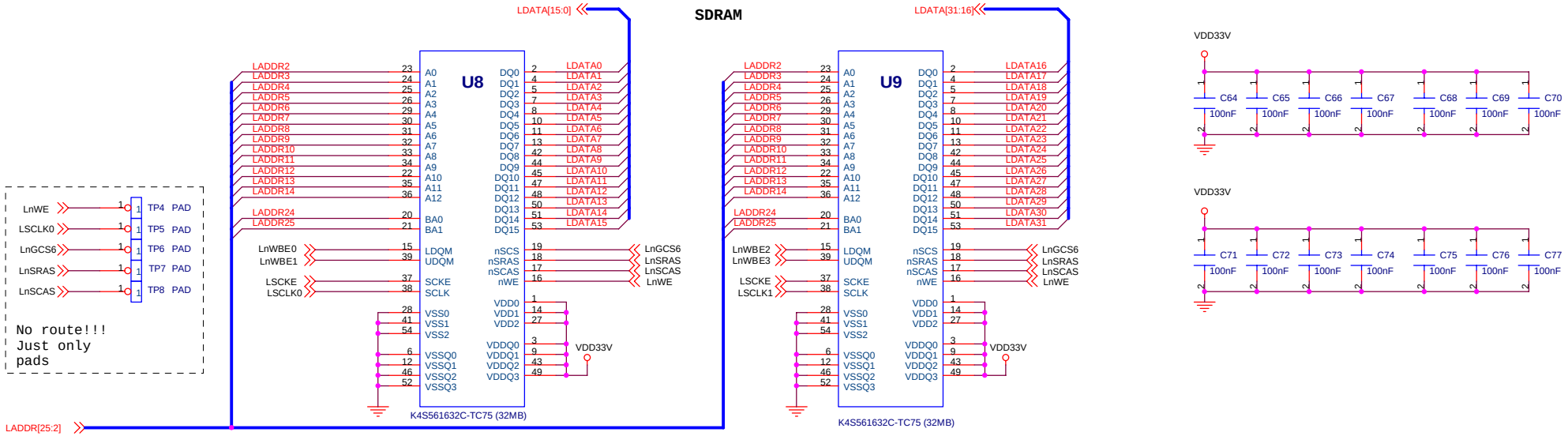

SAMSUNG ELECTRONICS CO.,LTD			
Title	SMDK2410X (S3C2410X DEMO BOARD)		
Size A3	Document Number SDRAM		Rev 1.3
Date: Monday, August 19, 2002	Sheet 4 of 12		

S3C2410X01	J2	
Revision 0	1 - 2	nWAIT
Revision 1	2 - 3	RnB

AMD Flash Memory(SOCKET)

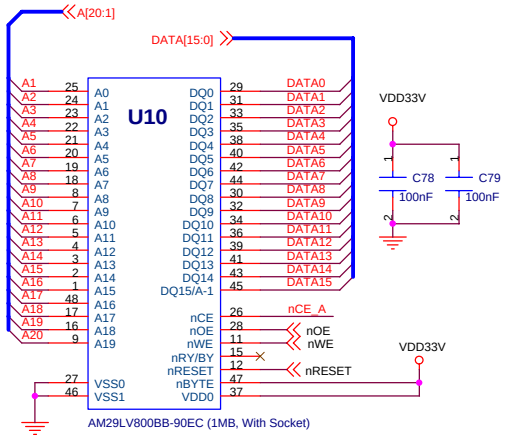

SmartMedia Card (NAND Flash memory)

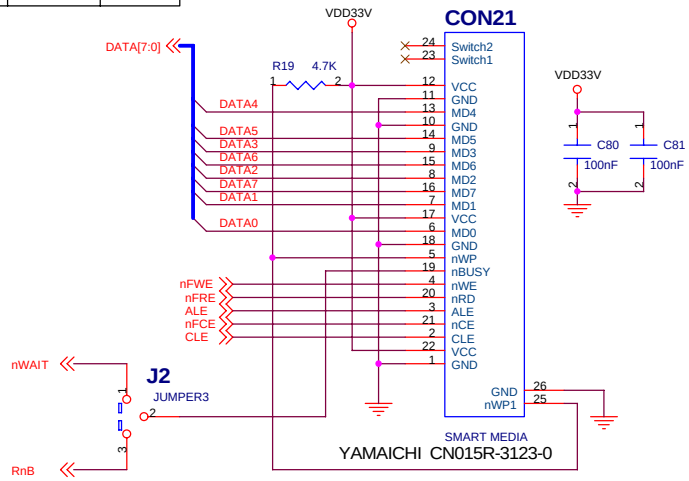

FLASH Memory Select

FLASH	J6	J9	J7
AMD Flash	2-3	1-2	1-2
Strata 32bit	1-2	2-3	1-2
Strata 16bit	1-2	2-3	2-3

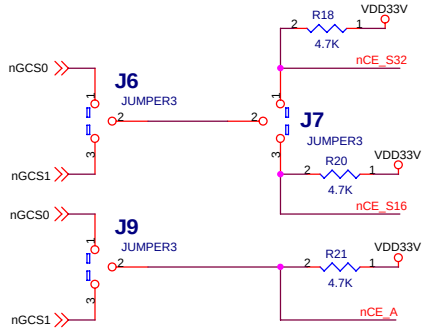

INTEL StrataFlash Memory(SMD Unload)

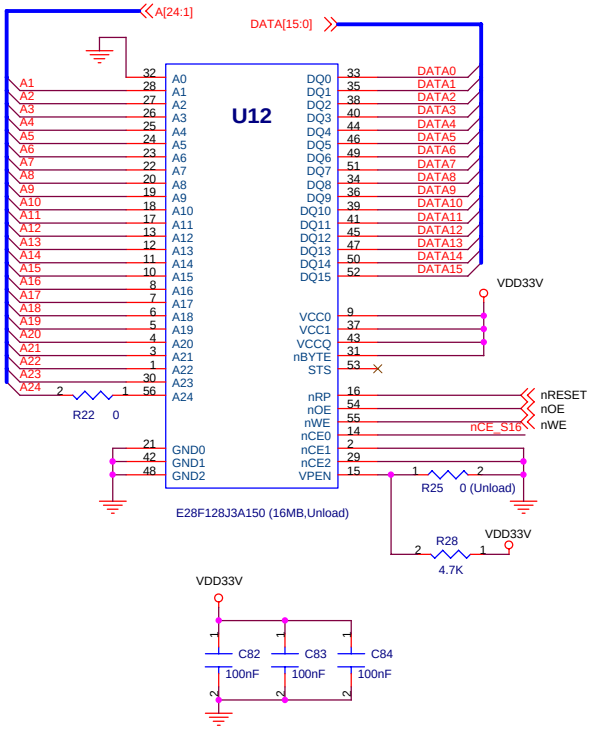

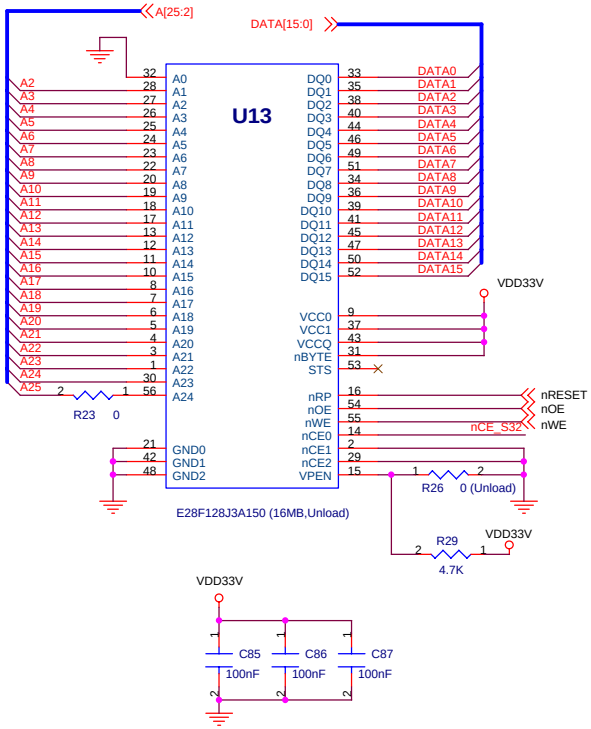

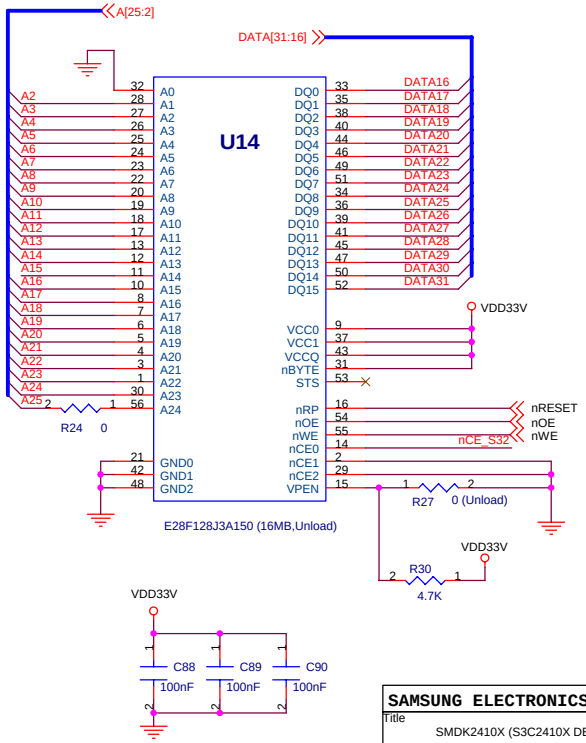

SAMSUNG ELECTRONICS CO.,LTD		
Title	SMDK2410X (S3C2410X DEMO BOARD)	
Size A3	Document Number AMD & NOR(INTEL) , NAND(SAMSUNG) FLASH MEMORY	Rev 1.3
Date: Monday, August 19, 2002	Sheet 5 of 12	

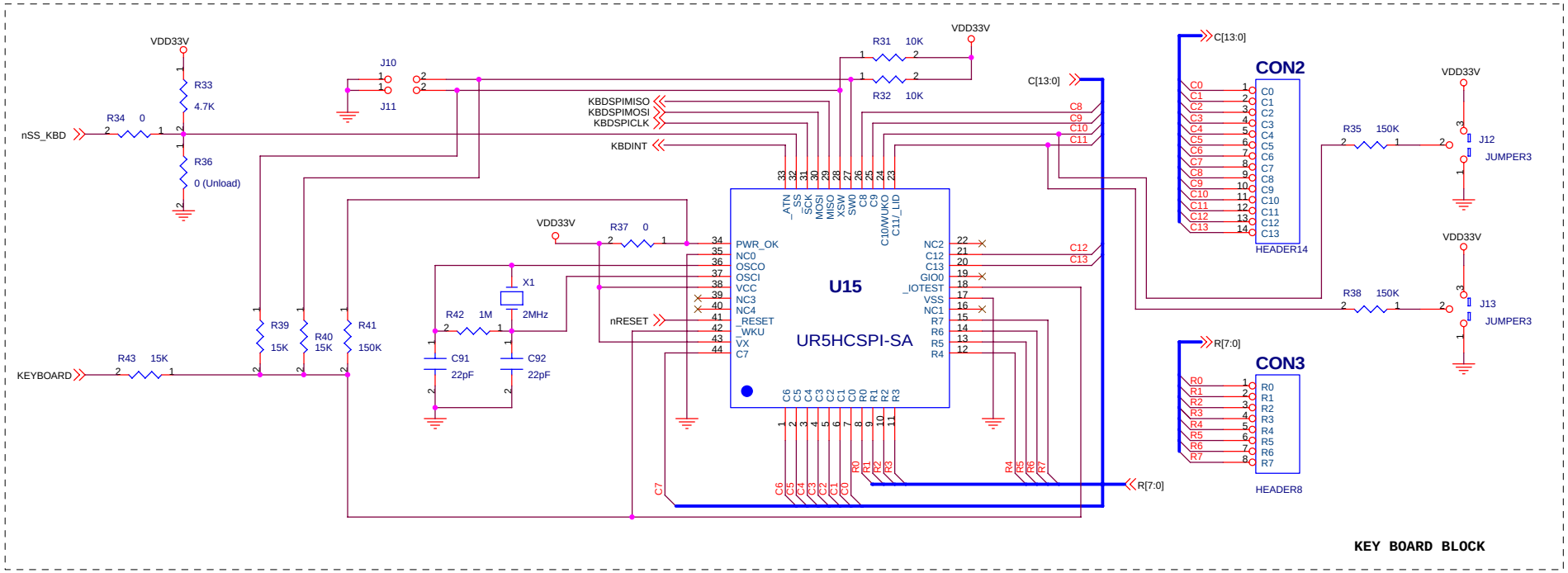

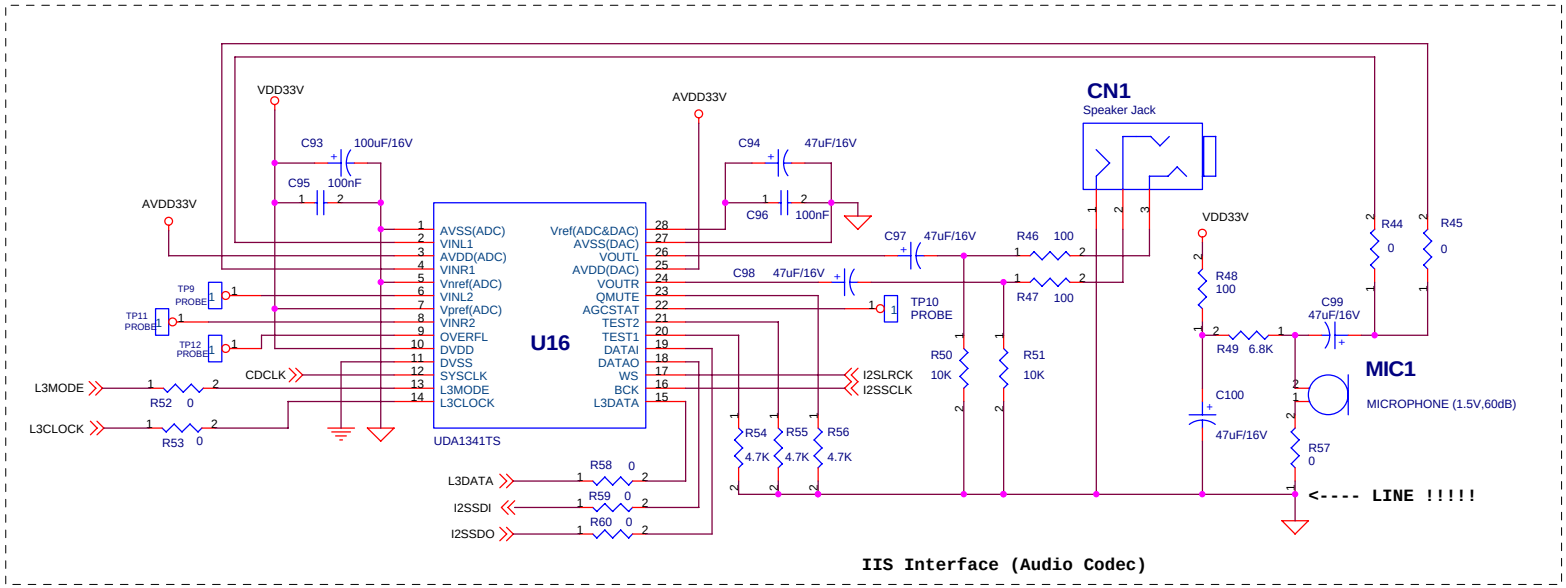

SAMSUNG ELECTRONICS CO.,LTD			
Title	SMDK2410X (S3C2410X DEMO BOARD)		
Size A3	Document Number KEYBOARD / IIS (AUDIO CODEC)		Rev 1.3
Date: Monday, August 19, 2002	Sheet 6 of 12		

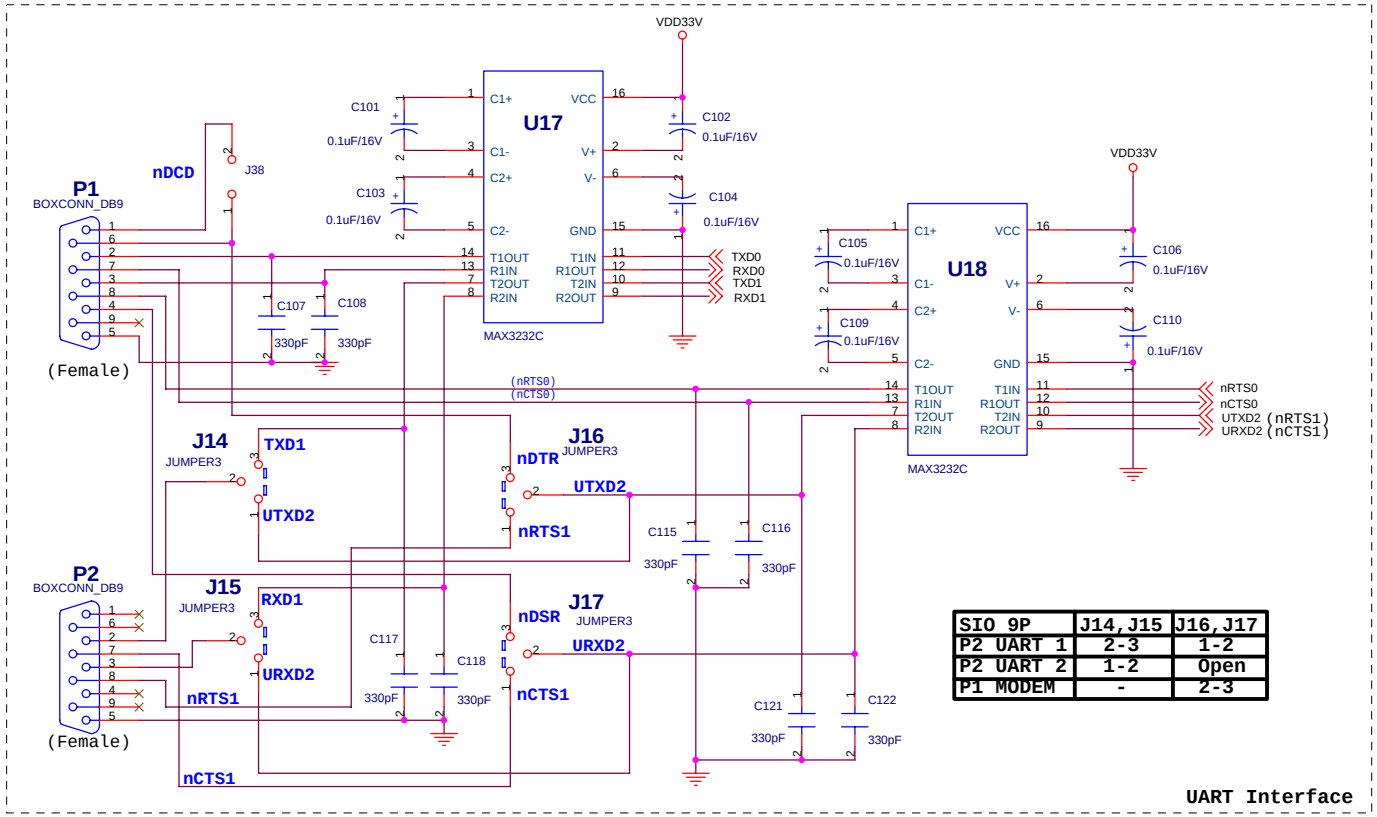

SIO 9P	J14,J15	J16,J17
P2 UART 1	2-3	1-2
P2 UART 2	1-2	Open
P1 MODEM	-	2-3

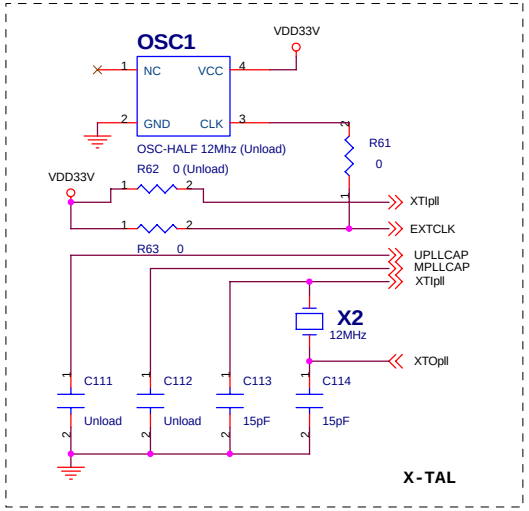

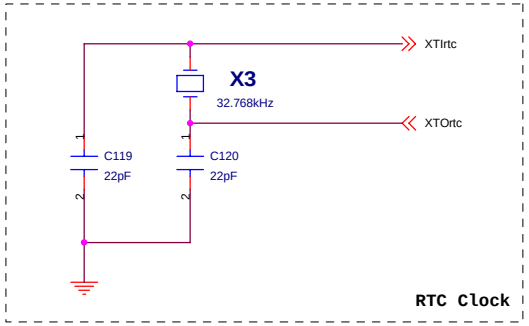

	J18	J19
IrDA	1-2	1-2
UART2	2-3	2-3

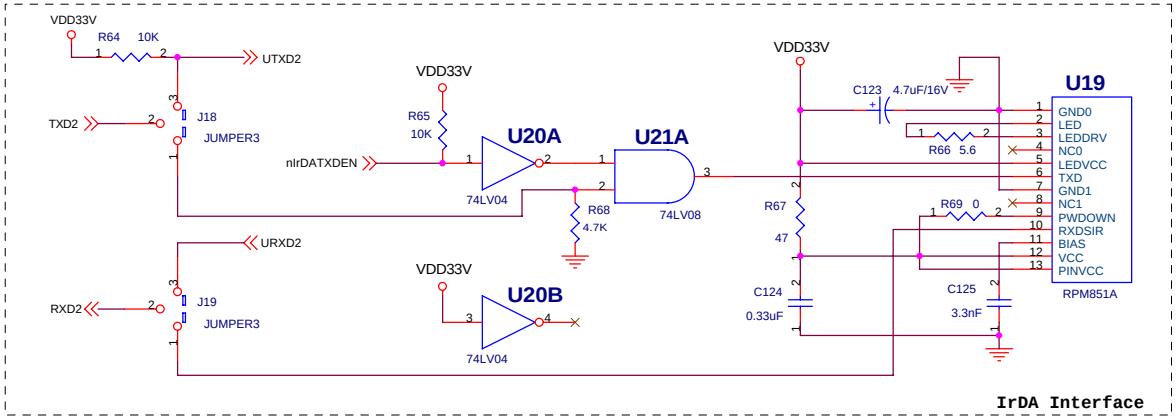

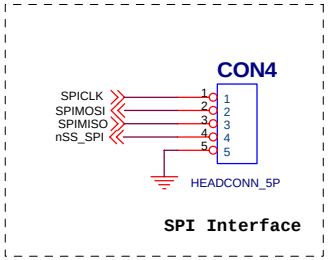

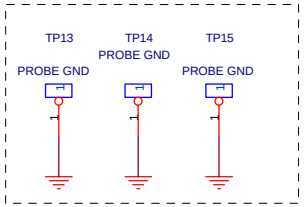

SAMSUNG ELECTRONICS CO.,LTD	
Title	SMDK2410X (S3C2410X DEMO BOARD)
Size A3	Document Number UART / Clock / IrDA / SPI — Rev 1.3
Date: Monday, August 19, 2002	Sheet 7 of 12

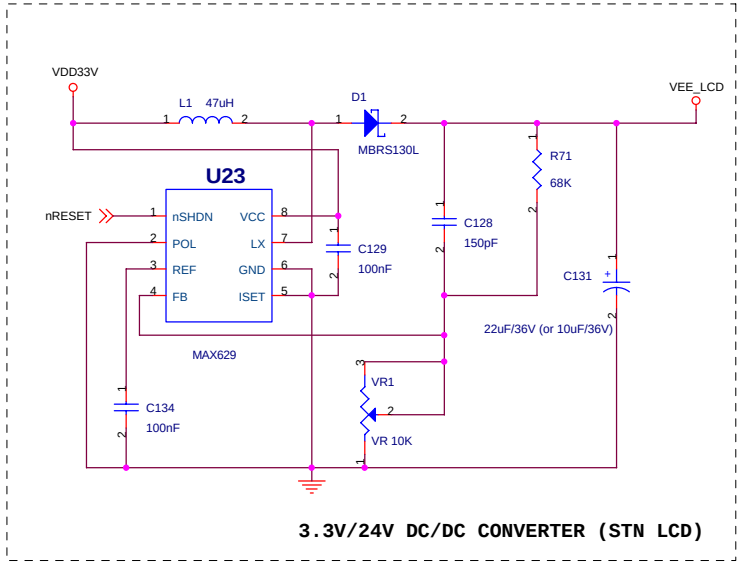

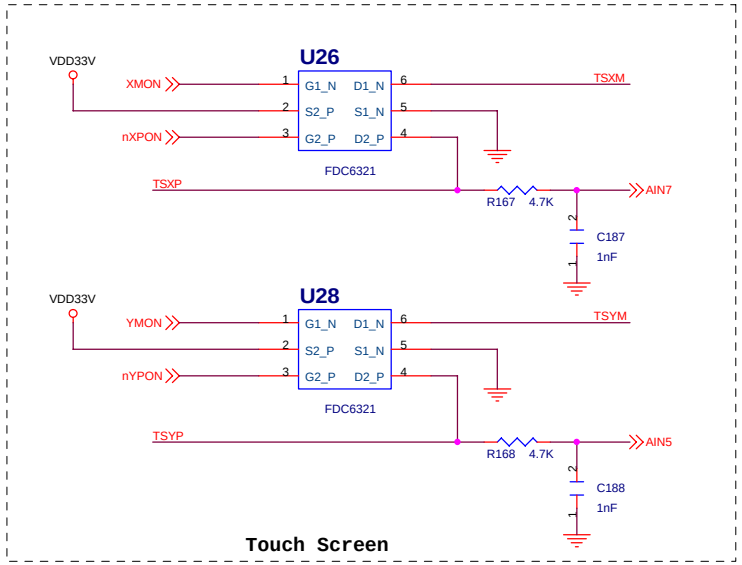

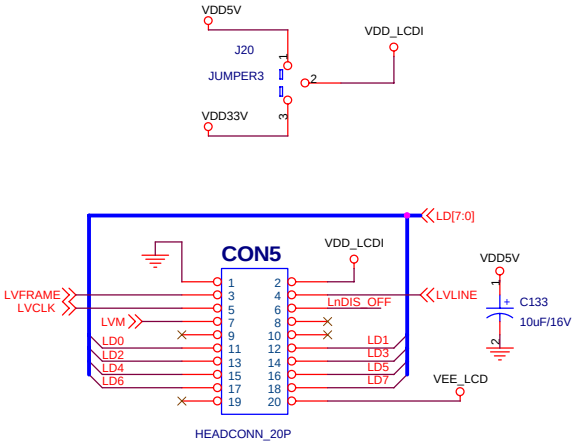

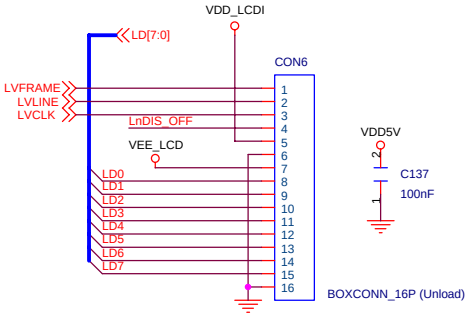

film connector for LCBHBT161M
MOLEX 52207-1690

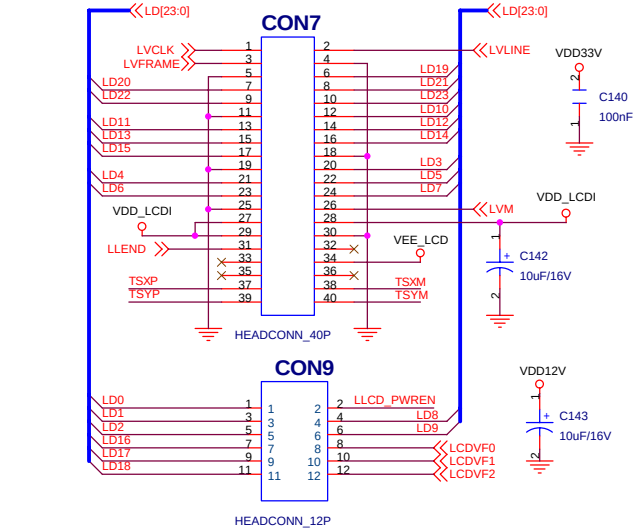

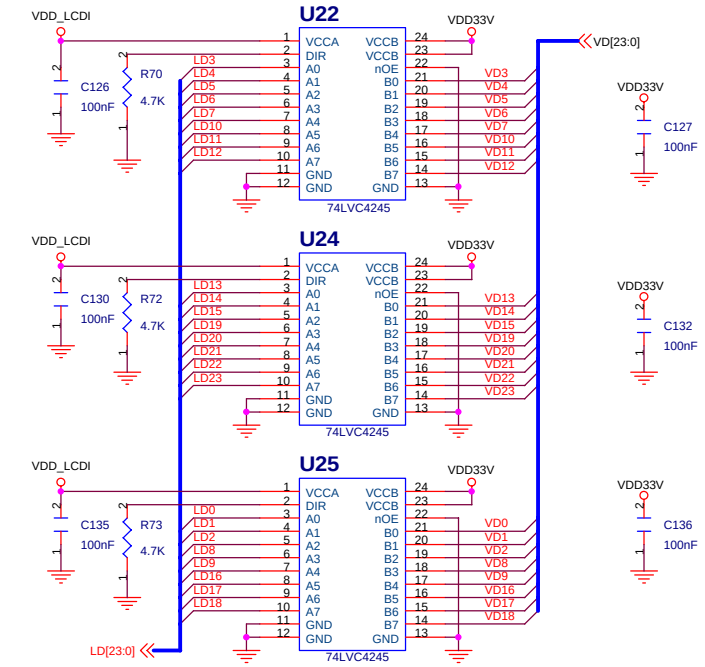

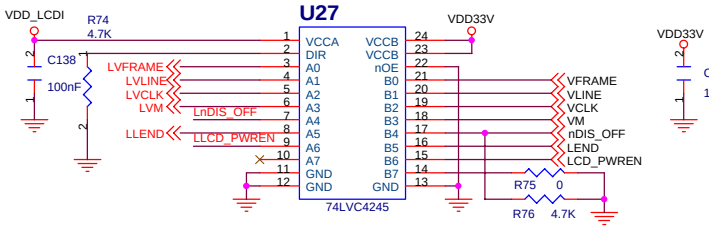

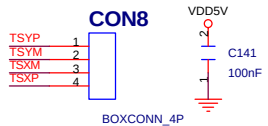

MITSHMI
M60-04-30-134P

SAMSUNG ELECTRONICS CO.,LTD		
Title: SMDK2410X (S3C2410X DEMO BOARD)		
Size: A3	Document Number: LCD	Rev: 1.3
Date: Monday, August 19, 2002	Sheet 8 of 12	

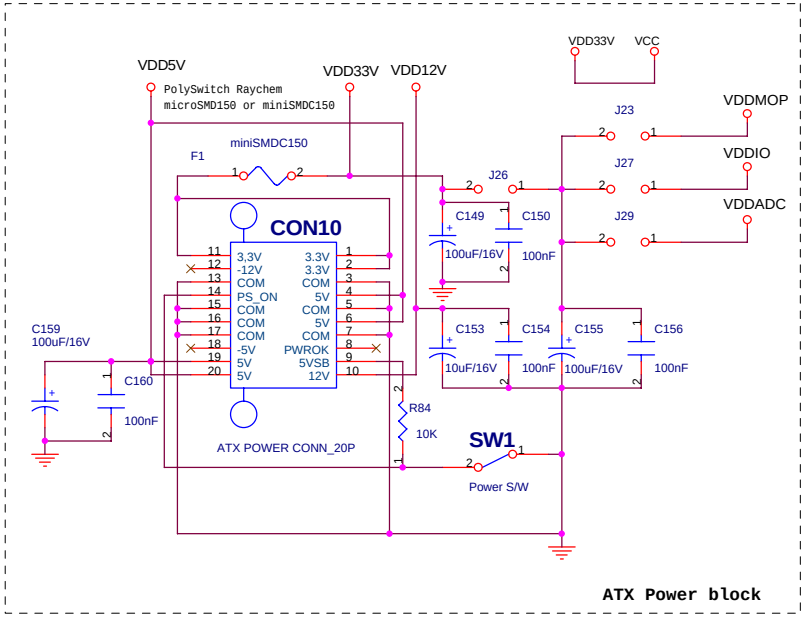

ATX Power block

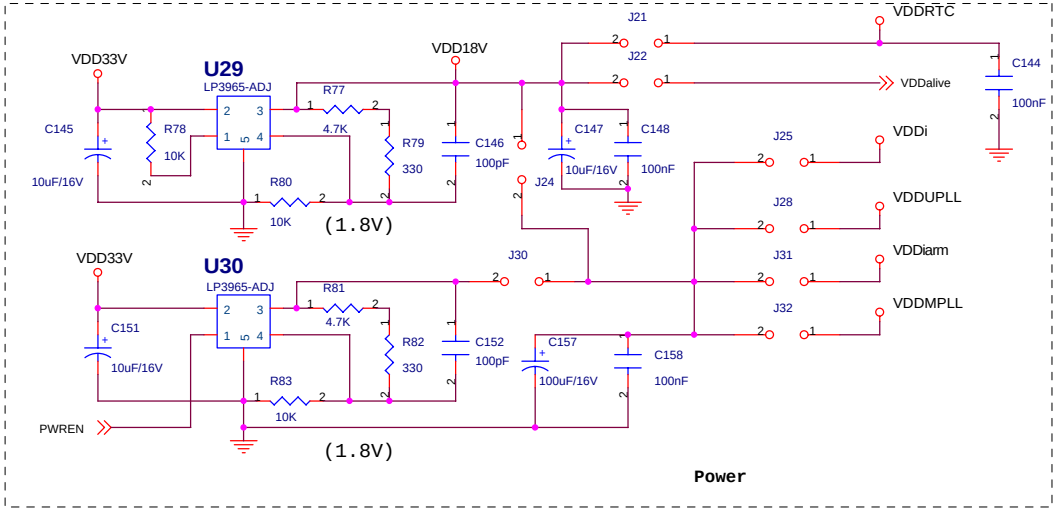

Power

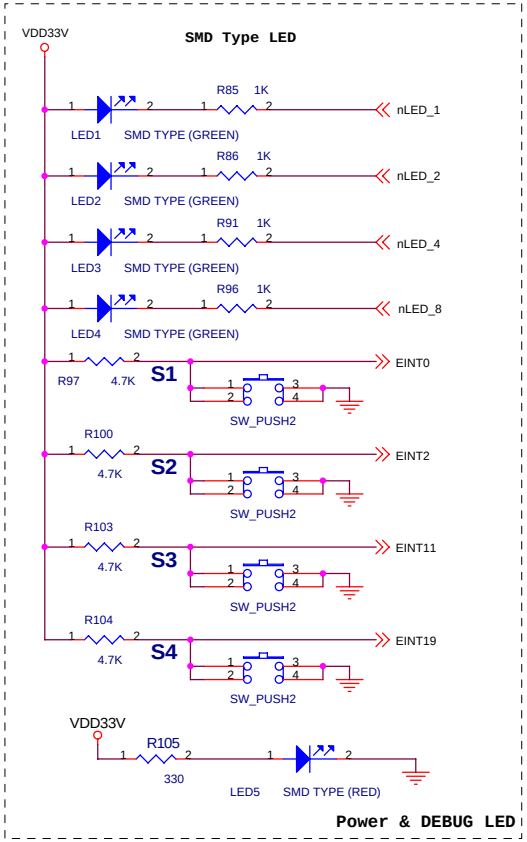

Power & DEBUG LED

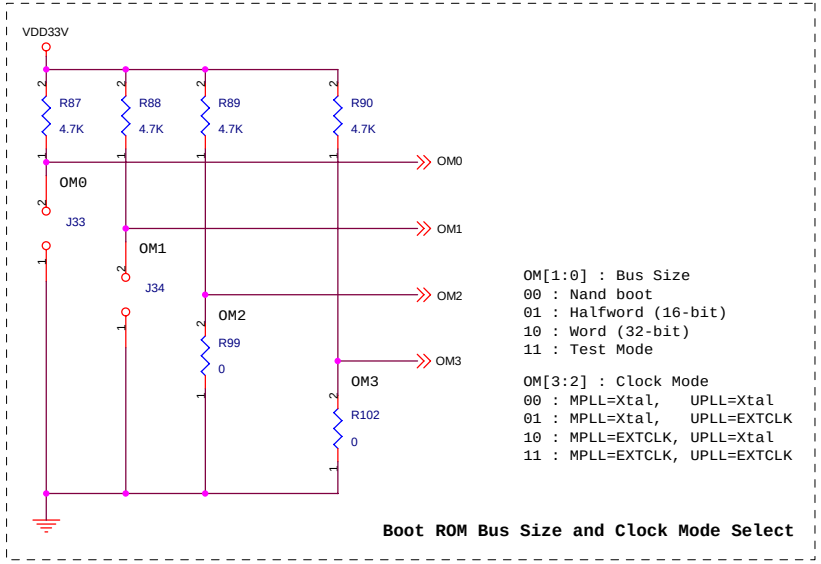

OM[1:0] : Bus Size
00 : Nand boot
01 : Halfword (16-bit)
10 : Word (32-bit)
11 : Test Mode

OM[3:2] : Clock Mode
00 : MPLL=Xtal, UPLL=Xtal
01 : MPLL=Xtal, UPLL=EXTCLK
10 : MPLL=EXTCLK, UPLL=Xtal
11 : MPLL=EXTCLK, UPLL=EXTCLK

Boot ROM Bus Size and Clock Mode Select

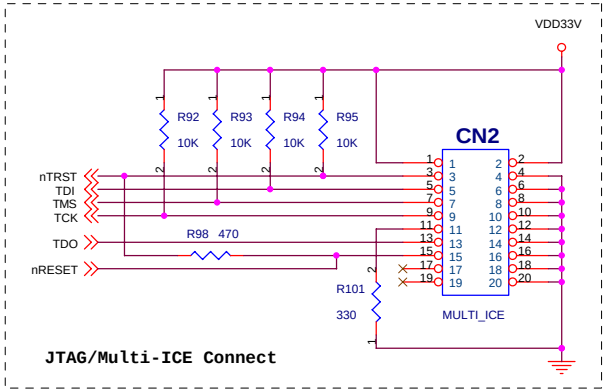

JTAG/Multi-ICE Connect

SAMSUNG ELECTRONICS CO.,LTD		
Title: SMDK2410X (S3C2410X DEMO BOARD)		
Size: A3	Document Number: POWER / SPI / JTAG/ LED / OM	Rev: 1.3
Date: Monday, August 19, 2002	Sheet 9 of 12	

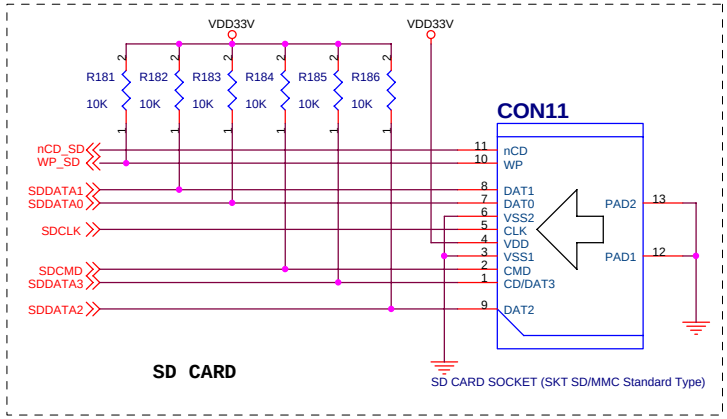

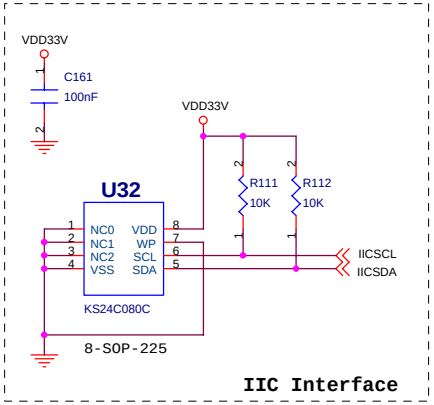

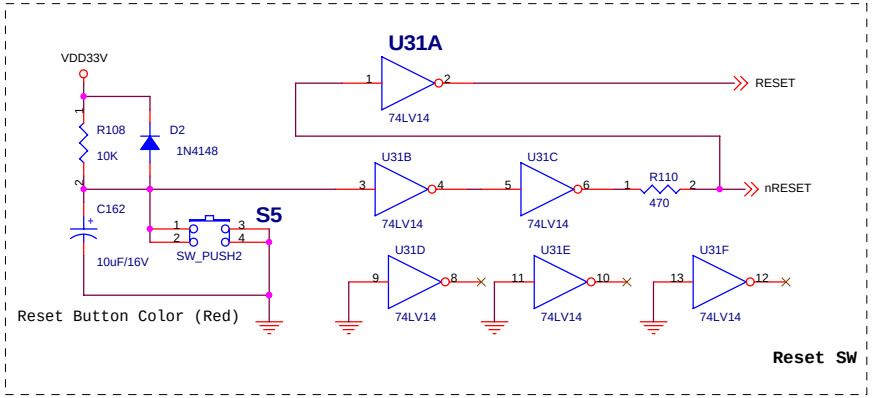

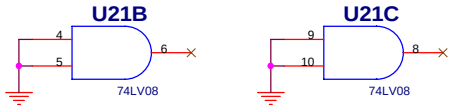

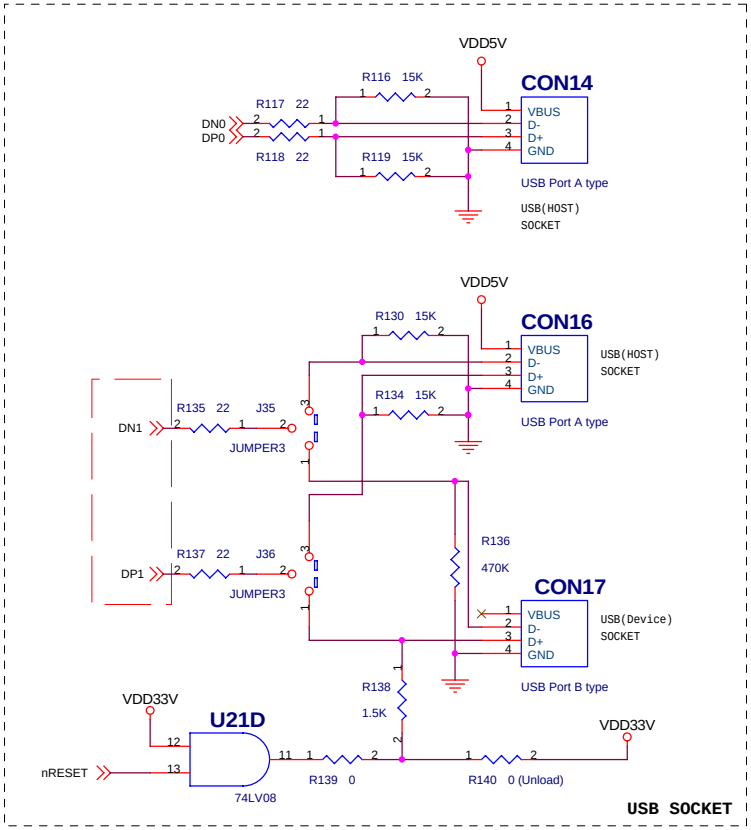

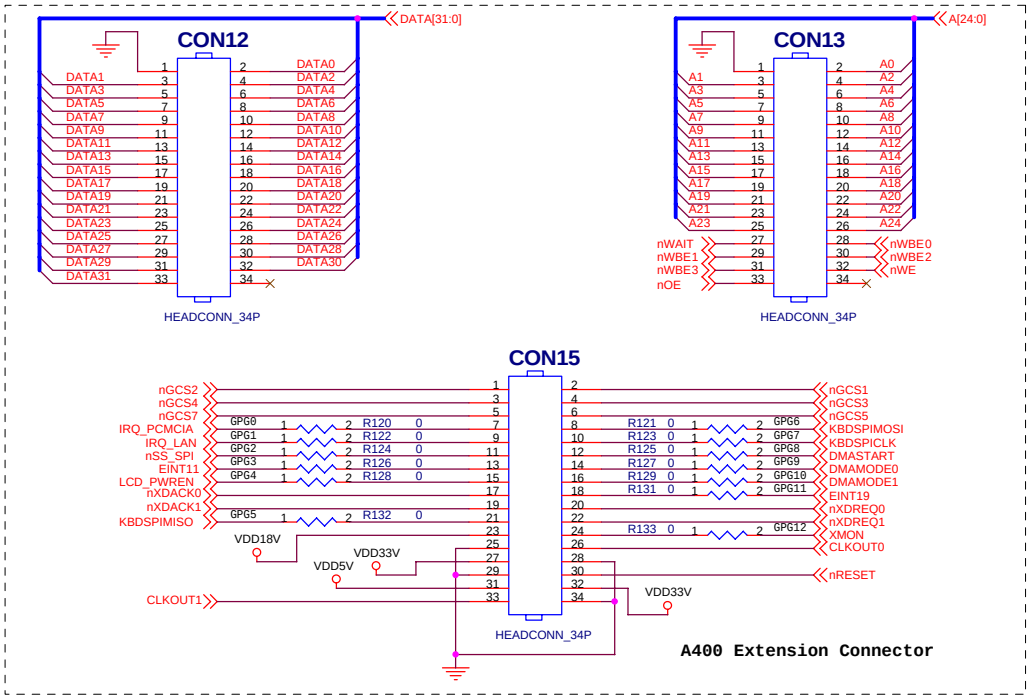

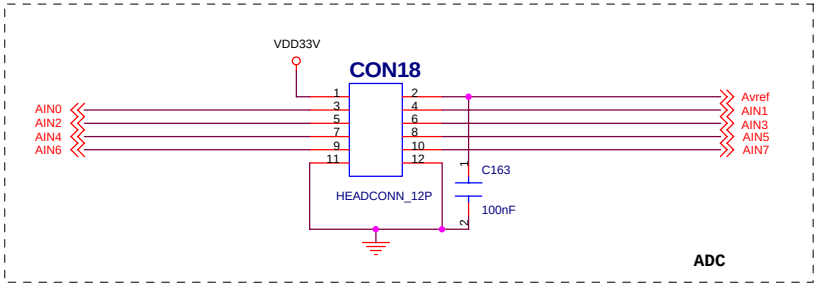

SAMSUNG ELECTRONICS CO.,LTD		
Title: SMDK2410X (S3C2410X DEMO BOARD)		
Size: A3	Document Number: SD / IIC / Reset /ADC / USB / A400 Connector	Rev: 1.3
Date: Monday, August 19, 2002	Sheet 10 of 12	

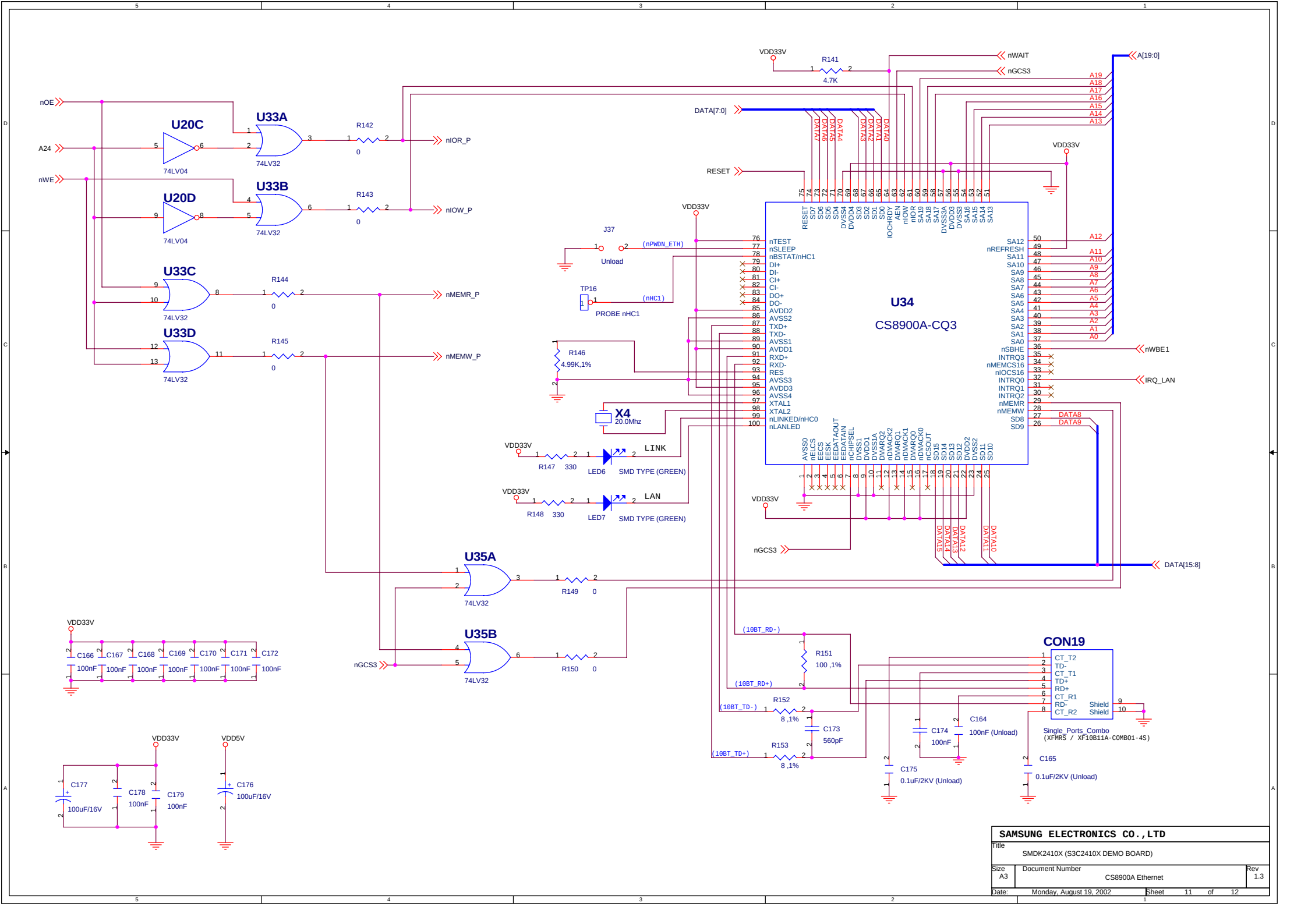
U20C
74LV04
U20D
74LV04
U33A
74LV32
U33B
74LV32
U33C
74LV32
U33D
74LV32
U35A
74LV32
U35B
74LV32
U34
CS8900A-CQ3
CON19
Single_Ports_Combo
(XFMRS / XF10B11A-COMBO1-4S)
X4
20.0Mhz
J37
Unload
TP16
PROBE nHC1
LED6
LED7
SMD TYPE (GREEN)
LINK
LAN
nOE
A24
nWE
nIOR_P
nIOW_P
nMEMR_P
nMEMW_P
nGCS3
DATA[7:0]
DATA[15:8]
A[19:0]
nWAIT
nWBE1
IRQ_LAN
RESET
VDD33V
VDD5V
R141 4.7K
R142 0
R143 0
R144 0
R145 0
R146 4.99K,1%
R147 330
R148 330
R149 0
R150 0
R151 100 ,1%
R152 8 ,1%
R153 8 ,1%
C164 100nF (Unload)
C165 0.1uF/2KV (Unload)
C166 100nF
C167 100nF
C168 100nF
C169 100nF
C170 100nF
C171 100nF
C172 100nF
C173 560pF
C174 100nF
C175 0.1uF/2KV (Unload)
C176 100uF/16V
C177 100uF/16V
C178 100nF
C179 100nF
(10BT_RD-)
(10BT_RD+)
(10BT_TD-)
(10BT_TD+)
(nPWDN_ETH)
(nHC1)
SAMSUNG ELECTRONICS CO.,LTD
Title
SMDK2410X (S3C2410X DEMO BOARD)
Size A3
Document Number
CS8900A Ethernet
Rev 1.3
Date: Monday, August 19, 2002
Sheet 11 of 12

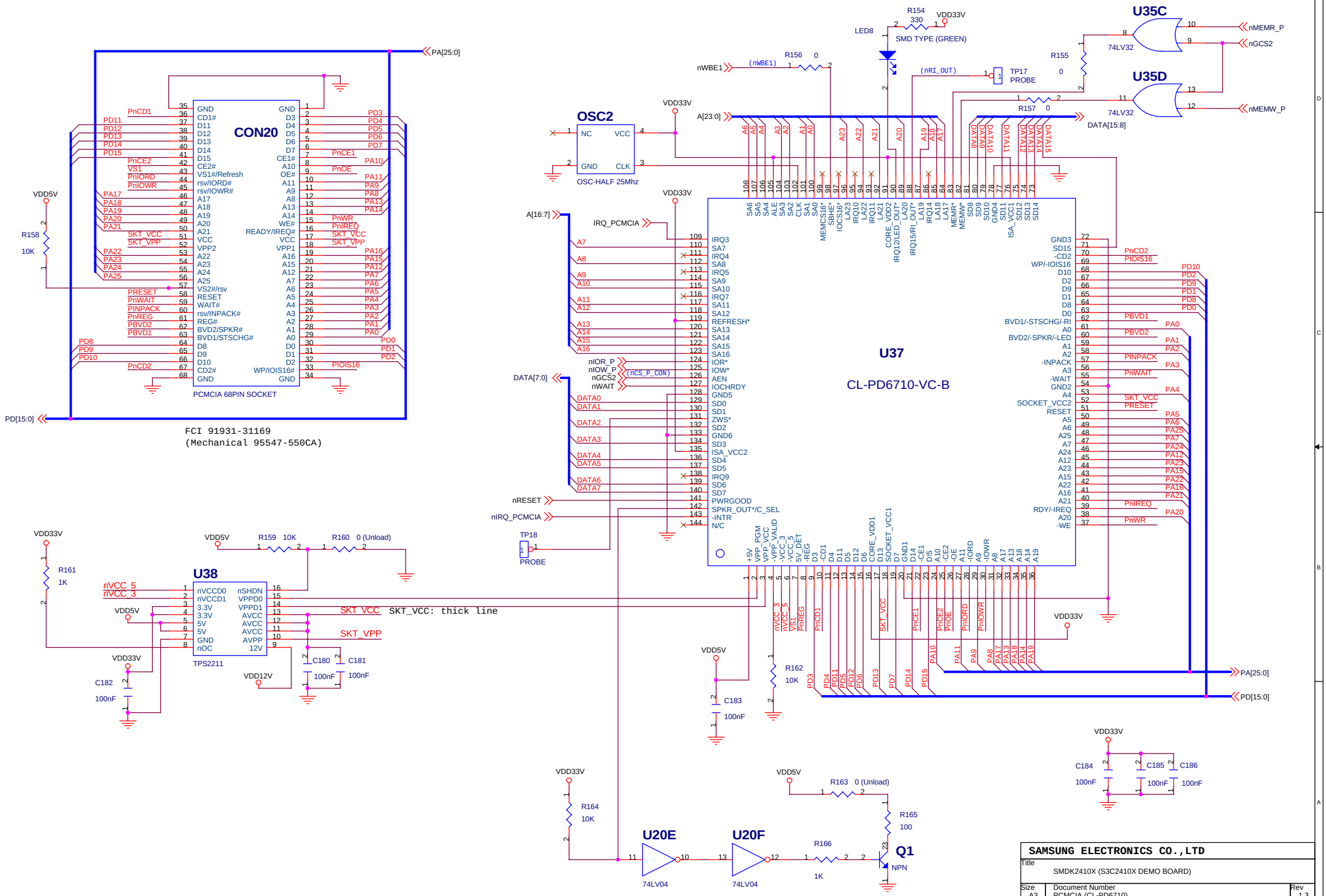
CON20
PCMCIA 68PIN SOCKET
FCI 91931-31169
(Mechanical 95547-550CA)
PA[25:0]
PD[15:0]
VDD5V
R158
10K
OSC2
OSC-HALF 25Mhz
VDD33V
A[23:0]
A[16:7]
DATA[7:0]
DATA[15:8]
U37
CL-PD6710-VC-B
IRQ_PCMCIA
nIOR_P
nIOW_P
nGCS2
nWAIT
nRESET
nIRQ_PCMCIA
TP18
PROBE
nWBE1
R156
0
LED8
R154
330
SMD TYPE (GREEN)
TP17
PROBE
R155
0
R157
0
U35C
U35D
74LV32
nMEMR_P
nGCS2
nMEMW_P
U38
TPS2211
nVCC_5
nVCC_3
SKT_VCC
SKT_VCC: thick line
SKT_VPP
VDD12V
R159
10K
R160
0 (Unload)
R161
1K
C180
C181
C182
100nF
R162
10K
C183
R164
10K
U20E
U20F
74LV04
R163
0 (Unload)
R165
100
R166
1K
Q1
NPN
C184
C185
C186
SAMSUNG ELECTRONICS CO.,LTD
Title
SMDK2410X (S3C2410X DEMO BOARD)
Size
A3
Document Number
PCMCIA (CL-PD6710)
Rev
1.3
Date:
Monday, August 19, 2002
Sheet
12
of
12