Computer Architecture Lab

Lab10 – Week #10

MPLAB
Media Processing Laboratory

컴퓨터 공학과 이성원 교수님 연구실

Pipeline

- Execute multiple instructions at the same time
- Sequential executions

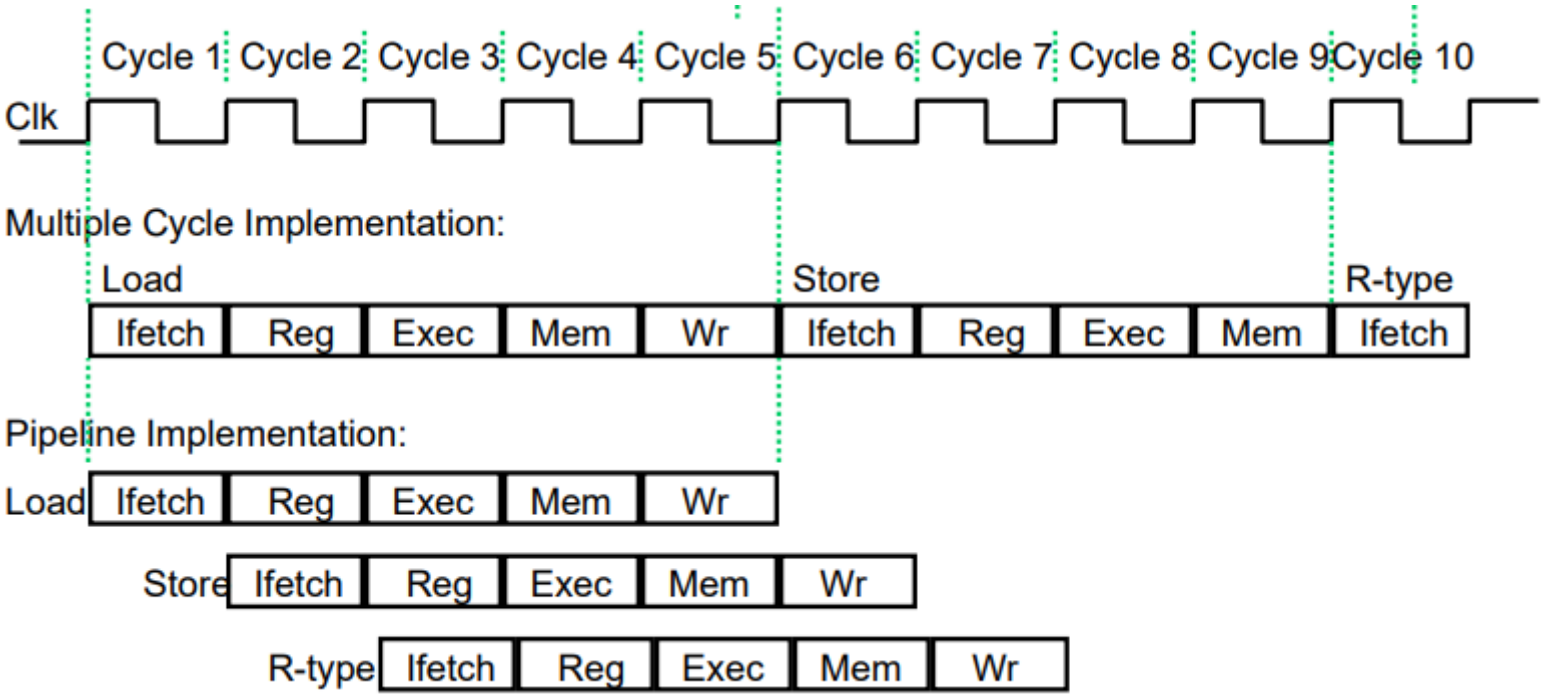

Pipeline

- Pipeline architecture
  - ✓ For reference only! (Not same as project circuit)

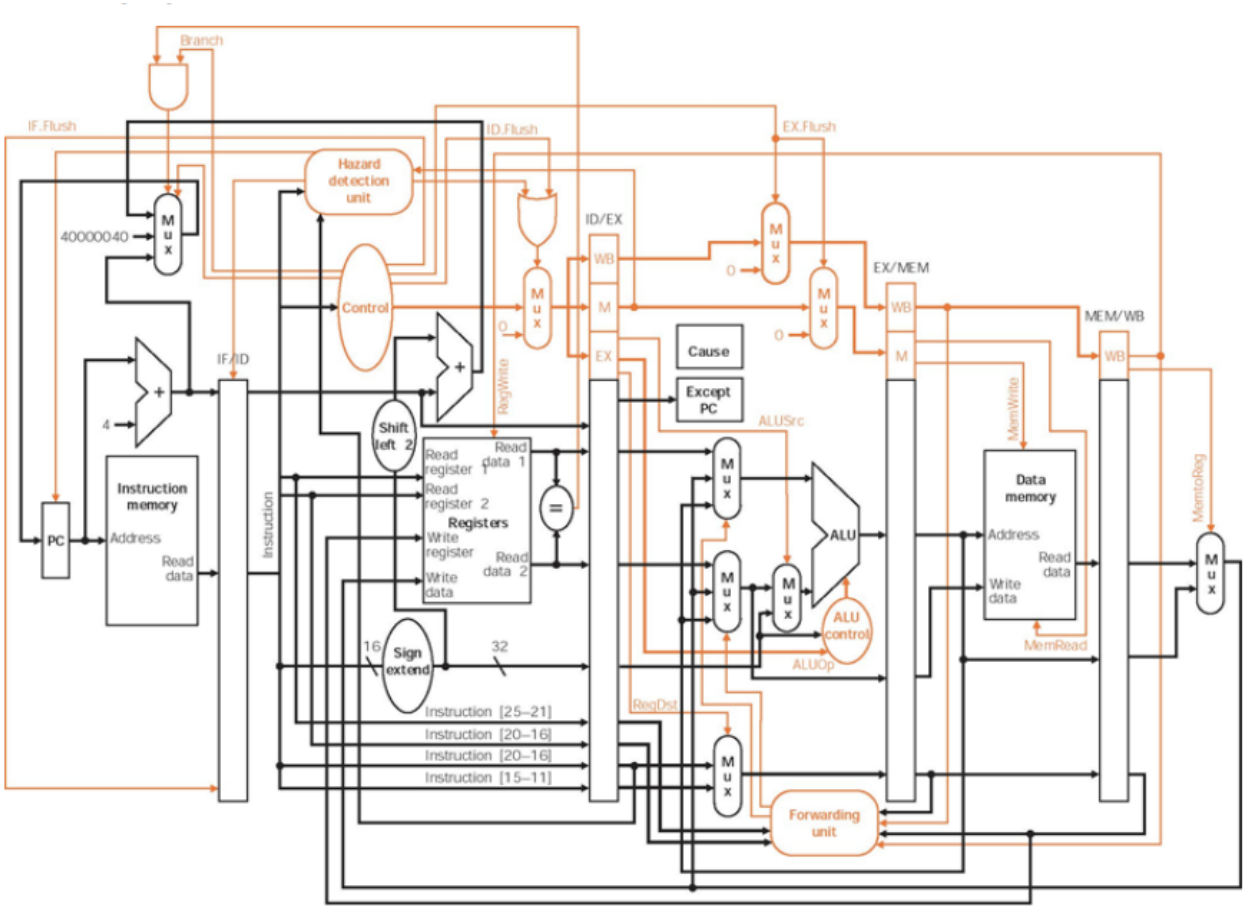

Structural hazards

- Different instructions are using the same resource at the same time
- Ex) Case of single memory

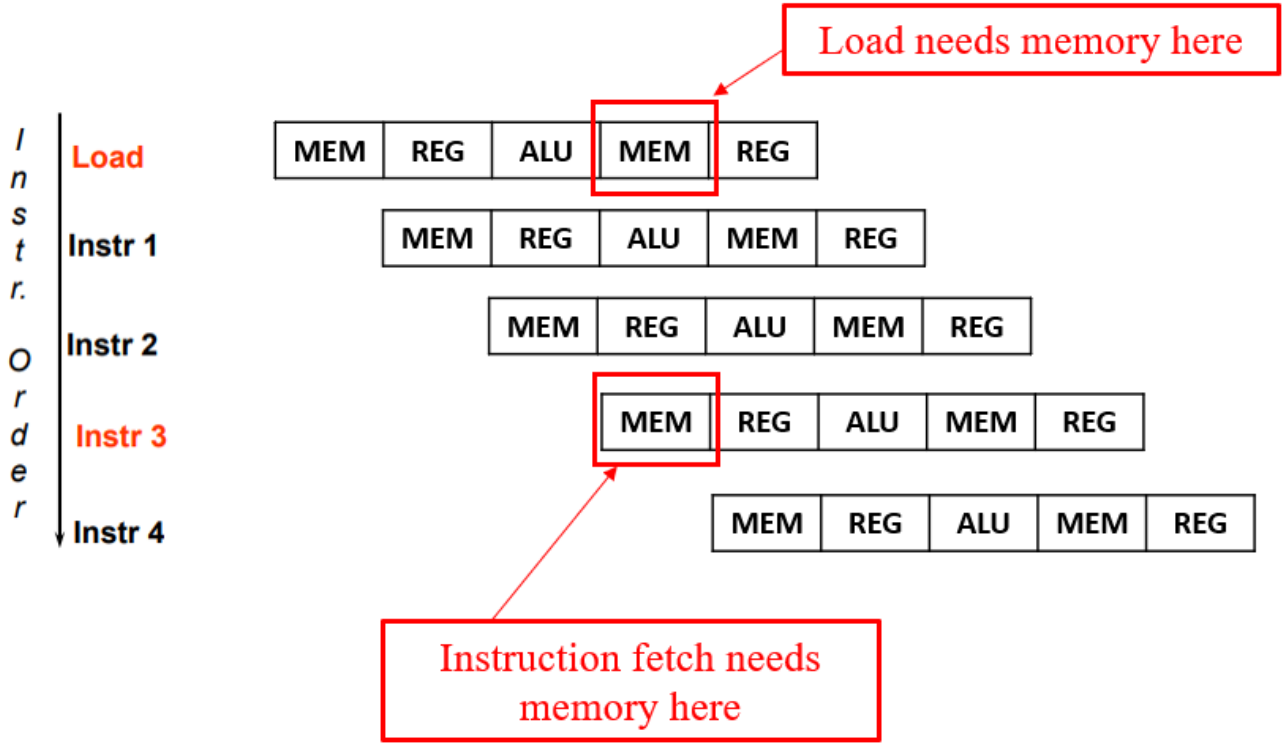

Data hazards

- Attempt to use item before it is ready
- Instruction depends on result of prior instruction still in the pipeline

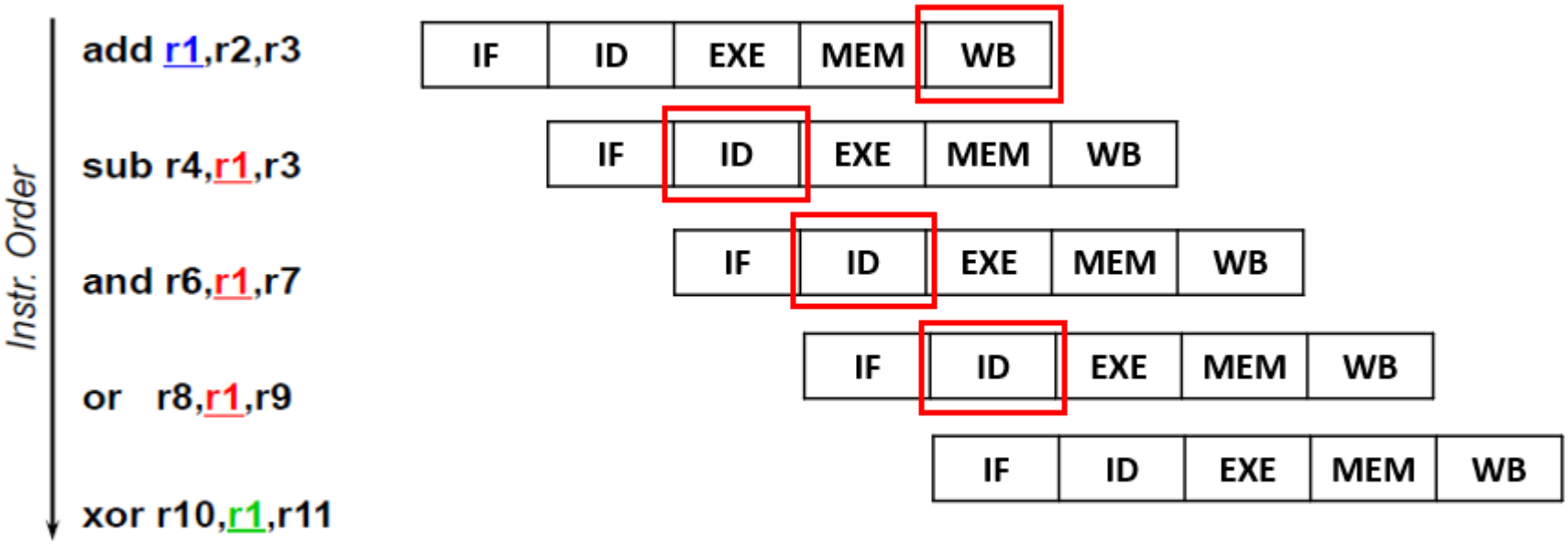

Data hazards

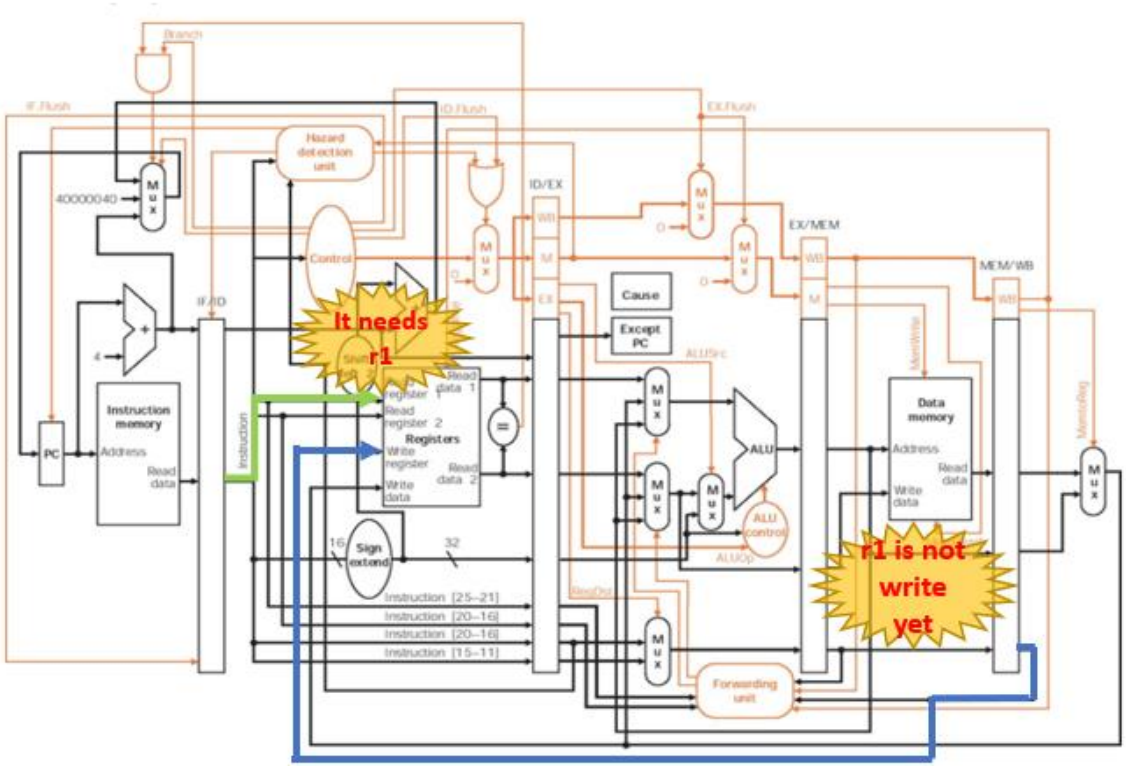

add r1,r2,r3	IF	ID	EXE	MEM	WB
sub r4,r1,r3	IF	ID	EXE	MEM	WB

Control hazards

- Attempt to make a decision before condition is evaulated

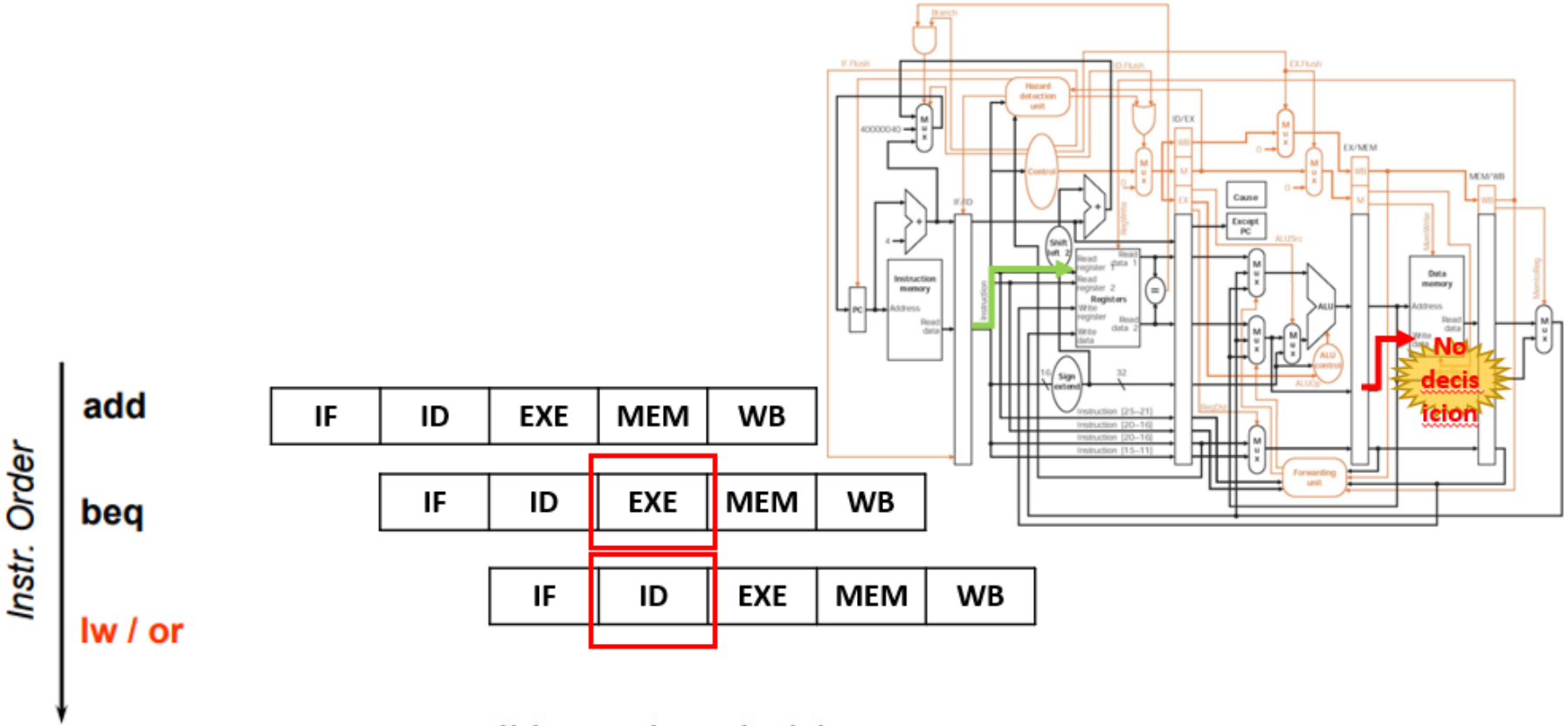

It didn't make a decision yet

Add NOP

Edit | Execute

insertion_sort.asm

```
1   .text
2   main:  lui  $4, 0x0000
3          ori  $4, $4, 0x2000
4          ori  $5, $0, 100
```

✓ Hazard occurred!

lui Fetch Decode Exe Mem Wb

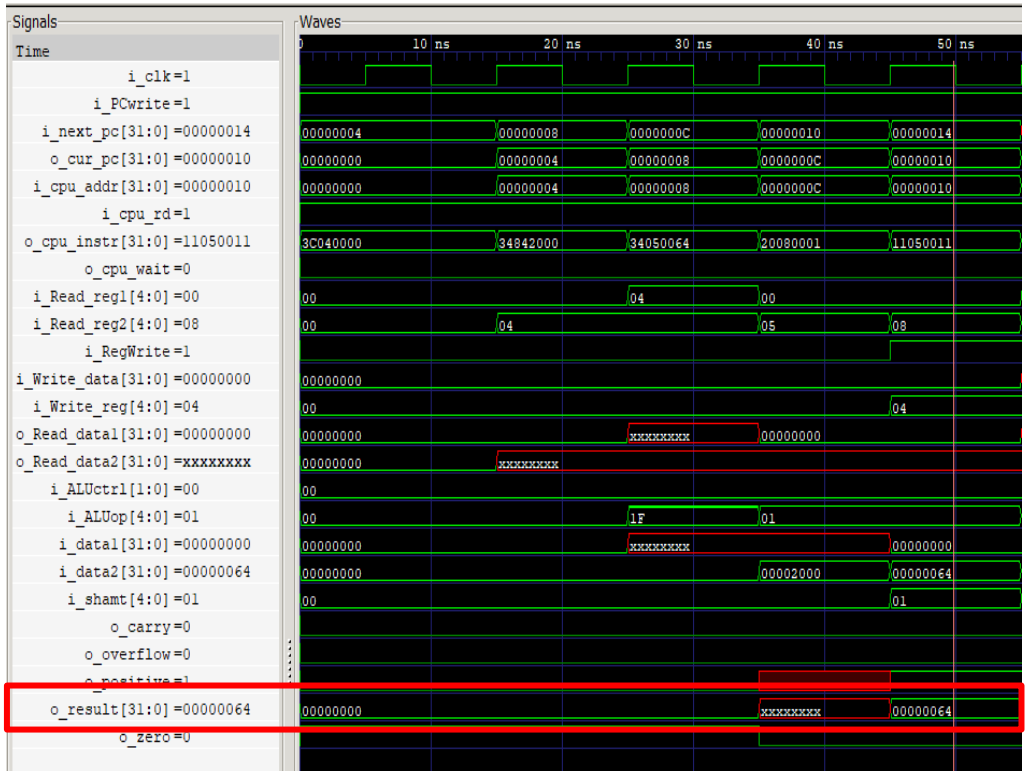

ori Fetch Decode Exe Mem

Add NOP

- By using MARS

✓ Write code

Edit | Execute

insertion_sort.asm

```
1  .text
2  main: lui   $4, 0x0000
3        nop
4        nop
5        nop
6        ori   $4, $4, 0x2000
7        ori   $5, $0, 100
```

✓ Assemble current file

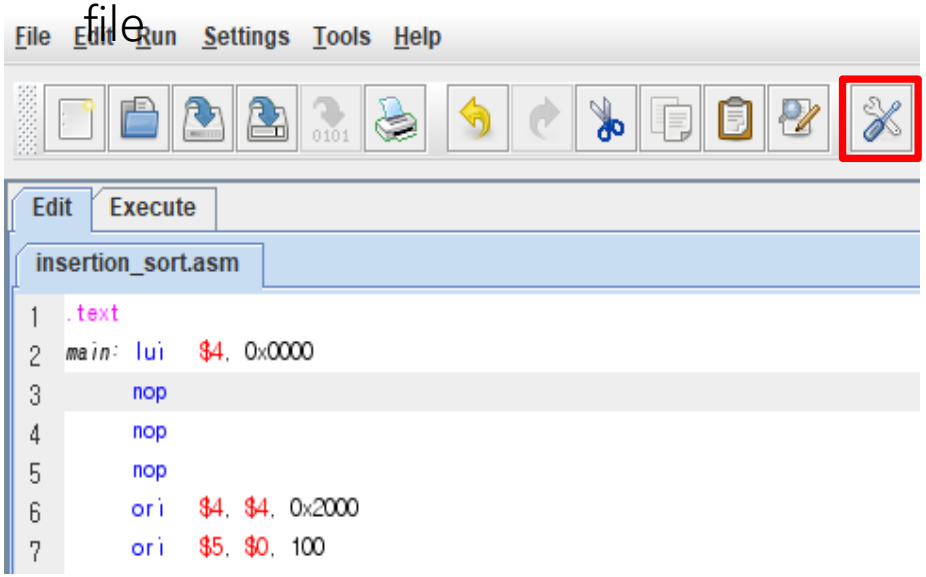

Add NOP

✓ Dump

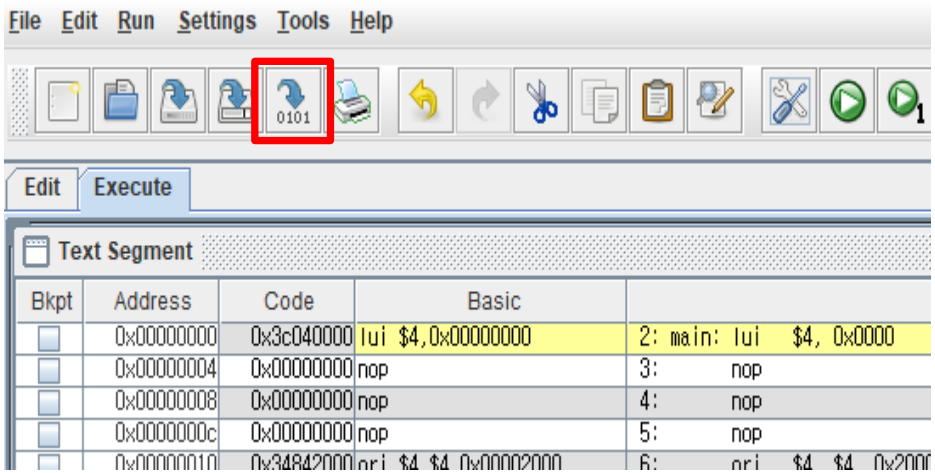

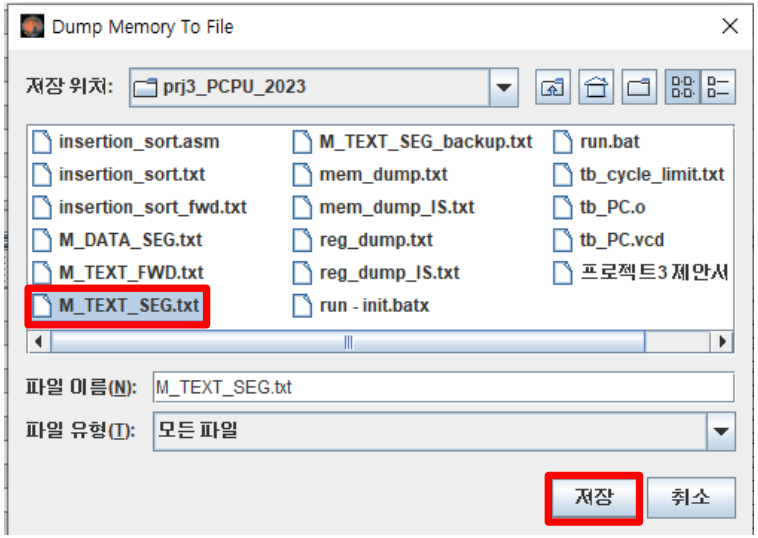

✓ Dump to file

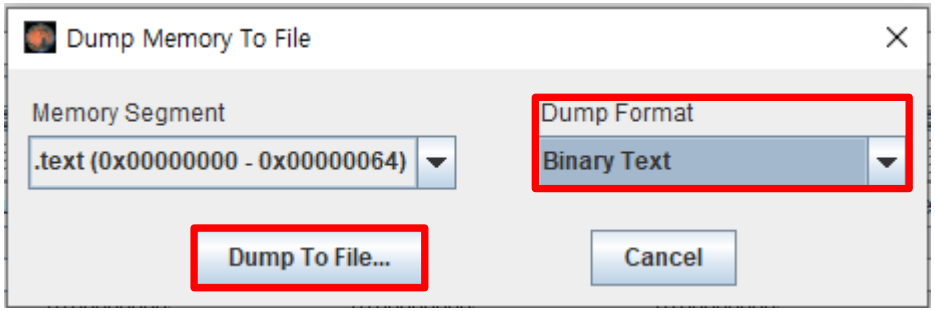

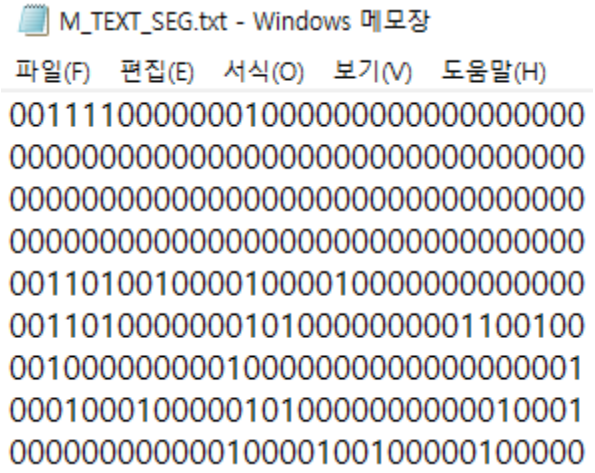

Add NOP

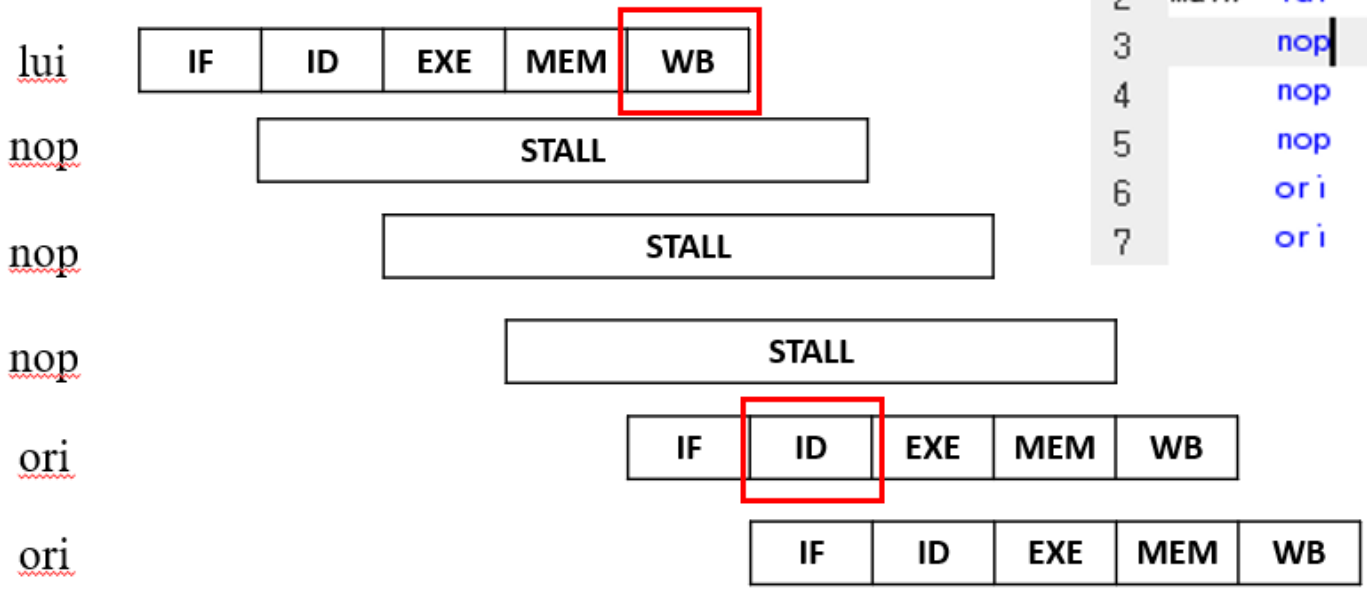

Edit | Execute

insertion_sort.asm

```
1  .text
2  main:  lui   $4, 0x0000
3         nop
4         nop
5         nop
6         ori   $4, $4, 0x2000
7         ori   $5, $0, 100
```

Simulation

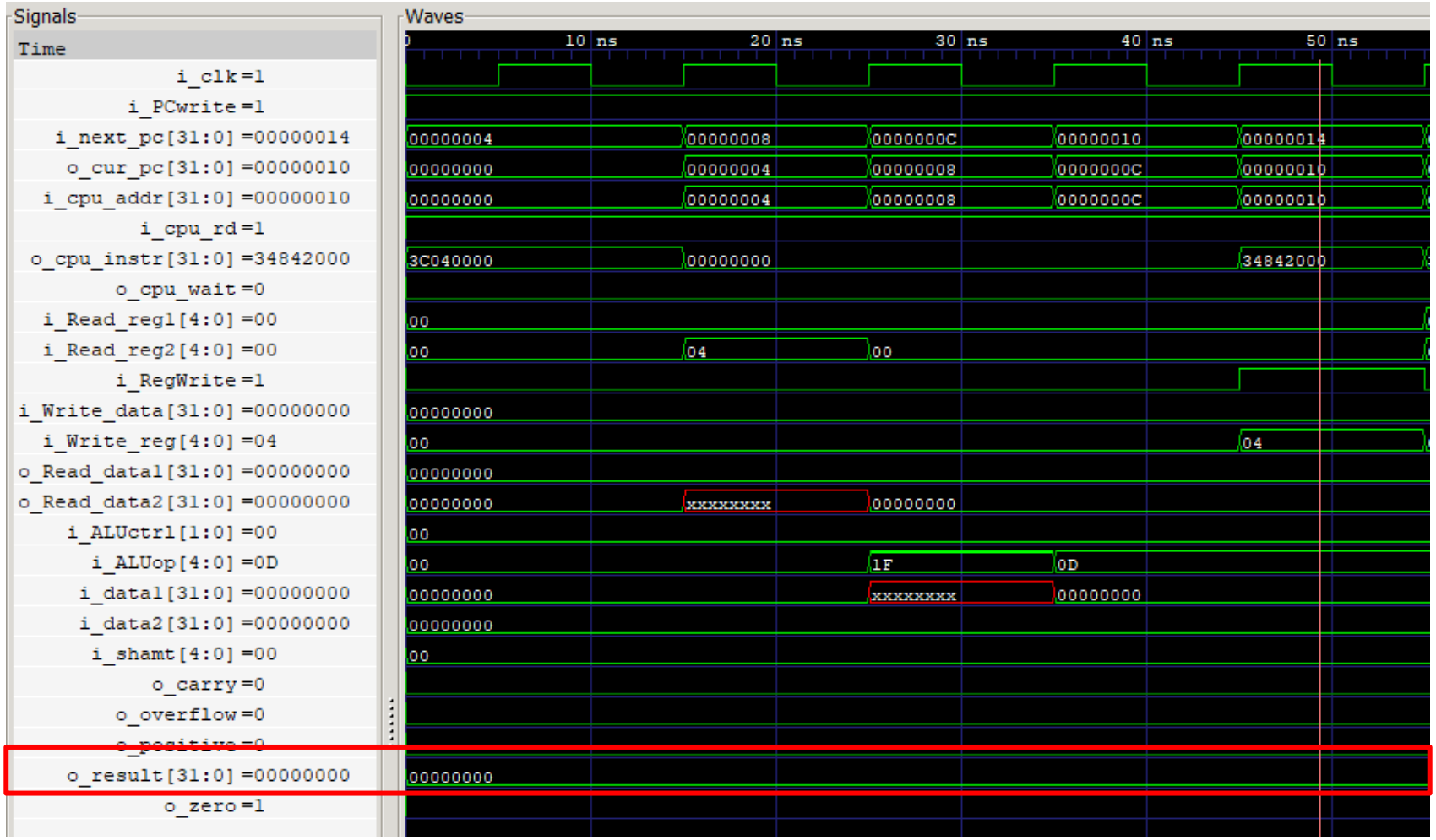

MPLAB
Media Processing Laboratory

Remove NOP

- "nop" is wasting time

```
00000000_00000000_00000000_00000000 // 00_00        nop
00110100_10000100_00100000_00000000 // 00_00        ori   $4, $4, 0x2000
00000000_00000000_00000000_00000000 // 00_00        nop
00000000_00000000_00000000_00000000 // 00_00        nop
00000000_00000000_00000000_00000000 // 00_00        nop
00000000_00000000_00000000_00000000 // 00_00        nop
00110100_00000101_00000000_00010000 // 00_00        ori   $5, $0, 0x10
00000000_00000000_00000000_00000000 // 00_00        nop
```

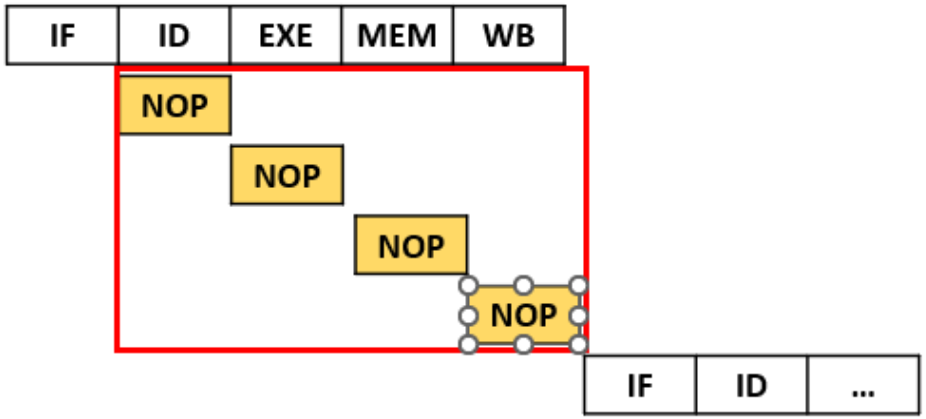

- Remove unnecessary "NOP" to improve performance

```
6        ori    $4, $4, 0x2000
7        ori    $5, $0, 100
```

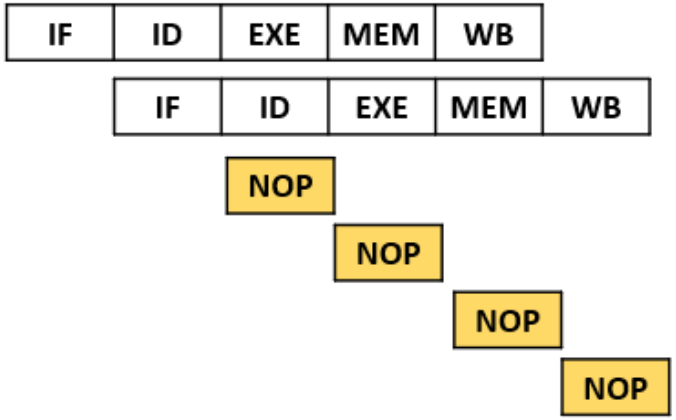

Run.bat

- Try to reduce cycle

- mem_dump_IS.txt and MEM_DUMP.txt will compare each other to check operation rightly

```
-------------------------------------------
| H020-3-1647-01: Computer Architecture    |
|                 CE.KW.AC.KR              |
-------------------------------------------
FST info: dumpfile tb_PC.vcd opened for output.
-------------------------------------------
 Break signal: 0,   # of Cycles:       7000
-------------------------------------------
```

```
파일을 비교합니다: mem_dump_IS.txt - MEM_DUMP.TXT
***** mem_dump_IS.txt
00000800 : 00000000_00000000_00001100_00001100 : 00000c0c
00000801 : 00000000_00000000_00001111_00101001 : 00000f29
00000802 : 00000000_00000000_00011101_01100101 : 00001d65
00000803 : 00000000_00000000_00101110_01100000 : 00002e60
00000804 : 00000000_00000000_00110010_10001001 : 00003289
00000805 : 00000000_00000000_00110110_01111111 : 0000367f
00000806 : 00000000_00000000_01000000_11100010 : 000040e2
00000807 : 00000000_00000000_01000001_11001011 : 000041cb
00000808 : 00000000_00000000_01000110_00100100 : 00004624
00000809 : 00000000_00000000_01011100_10010000 : 00005c90
0000080a : 00000000_00000000_01011101_10011100 : 00005d9c
0000080b : 00000000_00000000_01100001_01000111 : 00006147
0000080c : 00000000_00000000_01100001_10101101 : 000061ad
0000080d : 00000000_00000000_01100001_11111110 : 000061fe
0000080e : 00000000_00000000_01100101_01100101 : 00006565
0000080f : 00000000_00000000_01111001_00110100 : 00007934
00000810 : xxxxxxxx_xxxxxxxx_xxxxxxxx_xxxxxxxx : xxxxxxxx
***** MEM_DUMP.TXT
00000800 : 00000000_00000000_01111001_00110100 : 00007934
00000801 : 00000000_00000000_01000000_11100010 : 000040e2
00000802 : 00000000_00000000_00110010_10001001 : 00003289
00000803 : 00000000_00000000_00011101_01100101 : 00001d65
00000804 : 00000000_00000000_01100001_10101101 : 000061ad
00000805 : 00000000_00000000_01000110_00100100 : 00004624
00000806 : 00000000_00000000_01011101_10011100 : 00005d9c
00000807 : 00000000_00000000_00110110_01111111 : 0000367f
00000808 : 00000000_00000000_00001100_00001100 : 00000c0c
00000809 : 00000000_00000000_01011100_10010000 : 00005c90
0000080a : 00000000_00000000_00001111_00101001 : 00000f29
0000080b : 00000000_00000000_00101110_01100000 : 00002e60
0000080c : 00000000_00000000_01100001_01000111 : 00006147
0000080d : 00000000_00000000_01000001_11001011 : 000041cb
0000080e : 00000000_00000000_01100101_01100101 : 00006565
0000080f : 00000000_00000000_01100001_11111110 : 000061fe
00000810 : xxxxxxxx_xxxxxxxx_xxxxxxxx_xxxxxxxx : xxxxxxxx
*****
```

Thank You