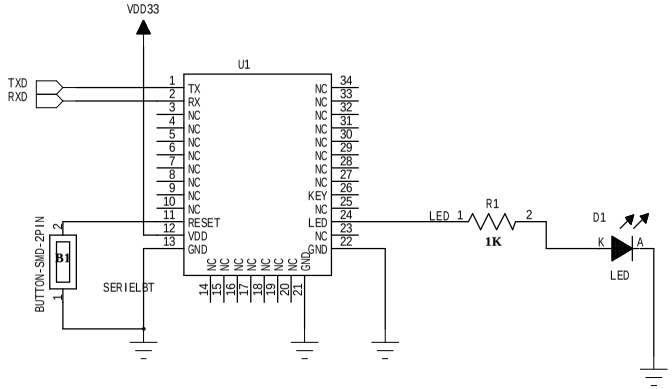

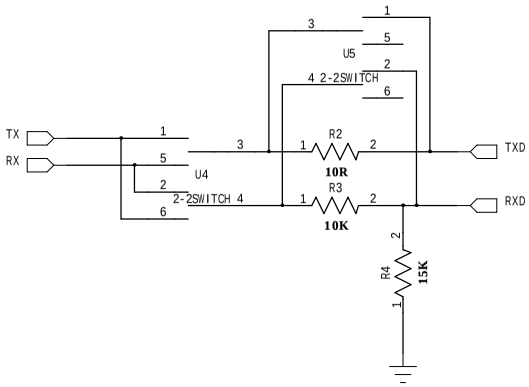

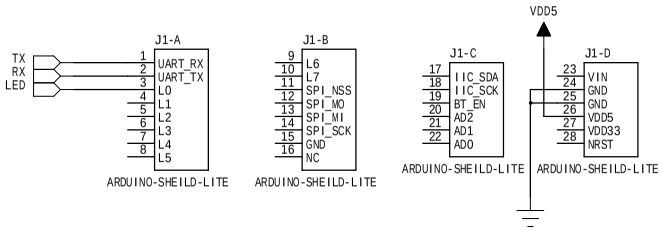

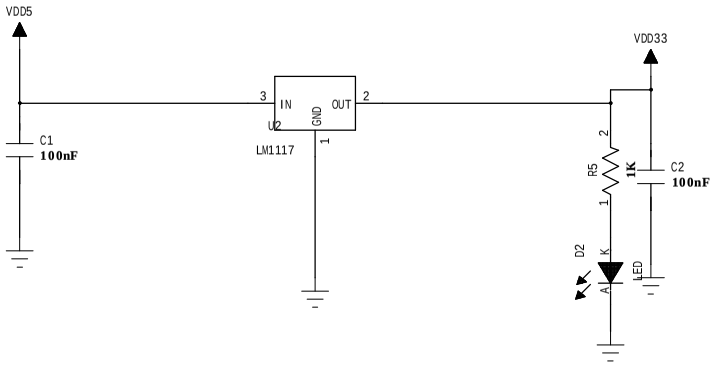

Company: iteadstudio		
Project Name: Shield-BT	Rev:1.0	
Sheet Name: <undefined>		
Designed by zzy		
File Name: Sheild-BT-a.sch	Page size: B	
Date： 2010-12-28	Page Num 1 of 1	