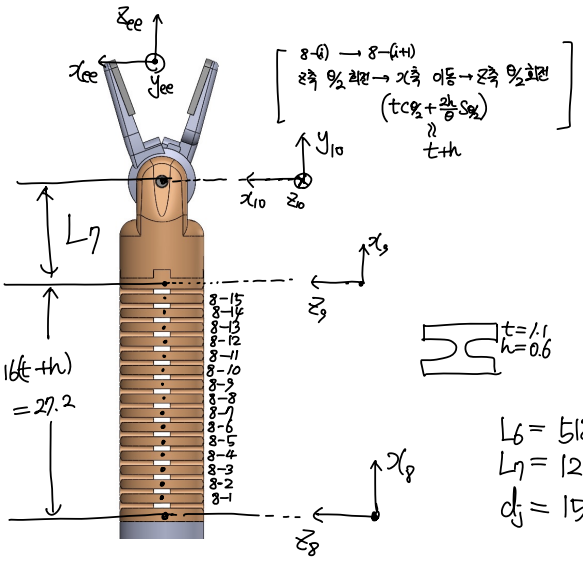

$L_6 = 518.4mm$
$L_7 = 12.25mm$
$d_f = 15.58mm$

i	α	a	d	θ
RCM → y	$\pi/2$	0	0	$\pi/2 + q_y$
y → p	$-\pi/2$	0	0	$-\pi/2 + q_p$
p → t	$\pi/2$	0	q_t	0
t → r	0	0	0	q_r
r → GB	0	0	$-L_6$	π
GB → dummy	0	0	L_6	0
dummy → 8	$\pi/2$	0	0	$\pi/2$
8 → 8-1			⋮	$f(\theta_8)$. wrist
8-15 → 9				
9 → 10	$-\pi/2$	L_7	0	$-\pi/2 + \theta_9$
10 → ee	$-\pi/2$	0	d_f	0

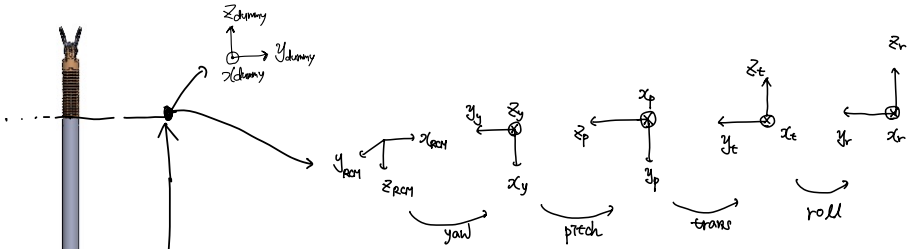

(same as da Vinci)

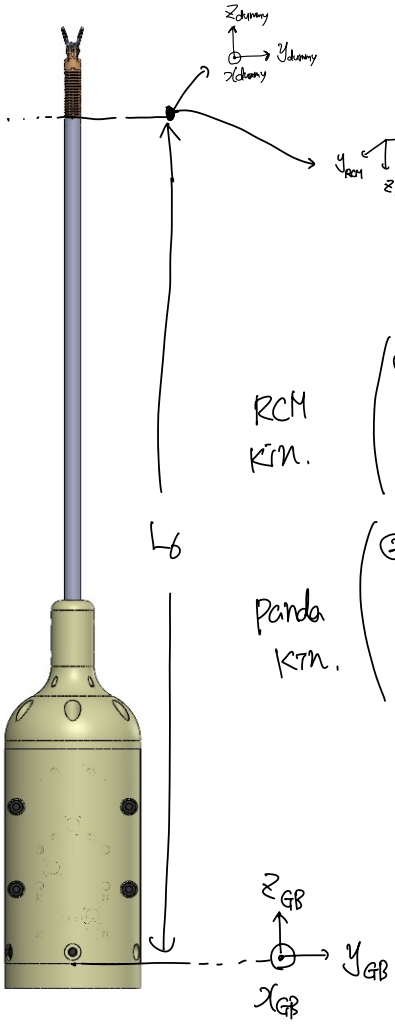

RCM Kin.

① ${}^{RCM}_{ee}T_{des} = ({}^{b}_{RCM}T)^{-1} \cdot ({}^{b}_{ee}T_{des}) = f_1(q_y, q_p, q_t, q_r, q_8, q_9)$

const (${}^{b}_{RCM}T$) · given (${}^{b}_{ee}T_{des}$) = RCM. f.k.

$q_y, q_p, q_t, q_r, q_8, q_9 = f_1^{-1}({}^{RCM}_{ee}T_{des})$

RCM. I.K.

Panda Kin.

② ${}^{b}_{F}T_{des} = {}^{b}_{RCM}T \cdot {}^{RCM}_{GB}T \cdot ({}^{F}_{GB}T)^{-1} = f_2(q_1, \cdots, q_7)$

const (${}^{b}_{RCM}T$) · known (${}^{RCM}_{GB}T$) · depending on GB attachment (${}^{F}_{GB}T$) = panda. f.k

$q_1, \cdots, q_7 = f_2^{-1}({}^{b}_{F}T_{des})$

panda I.K.

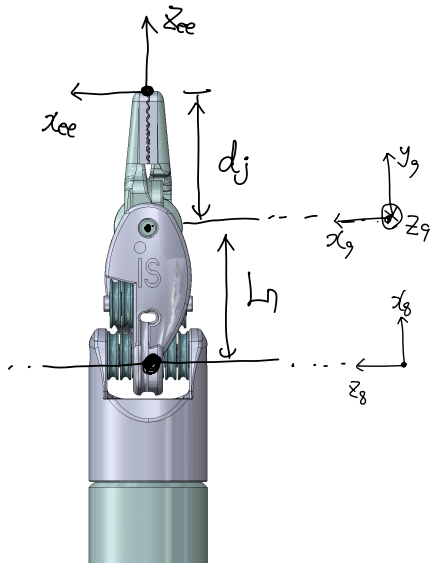

RCM kinematics

i	x α	x a	z d	z θ
RCM → y	$\pi/2$	0	0	$\pi/2 + q_y$
y → p	$-\pi/2$	0	0	$-\pi/2 + q_p$
p → t	$\pi/2$	0	q_t	0
t → r	0	0	0	θ_8
r → 8	$-\pi/2$	0	0	$-\pi/2 + \theta_9$
8 → 9	$-\pi/2$	L_7	0	$-\pi/2 + \theta_{10}$
9 → ee	$-\pi/2$	0	d_j	0

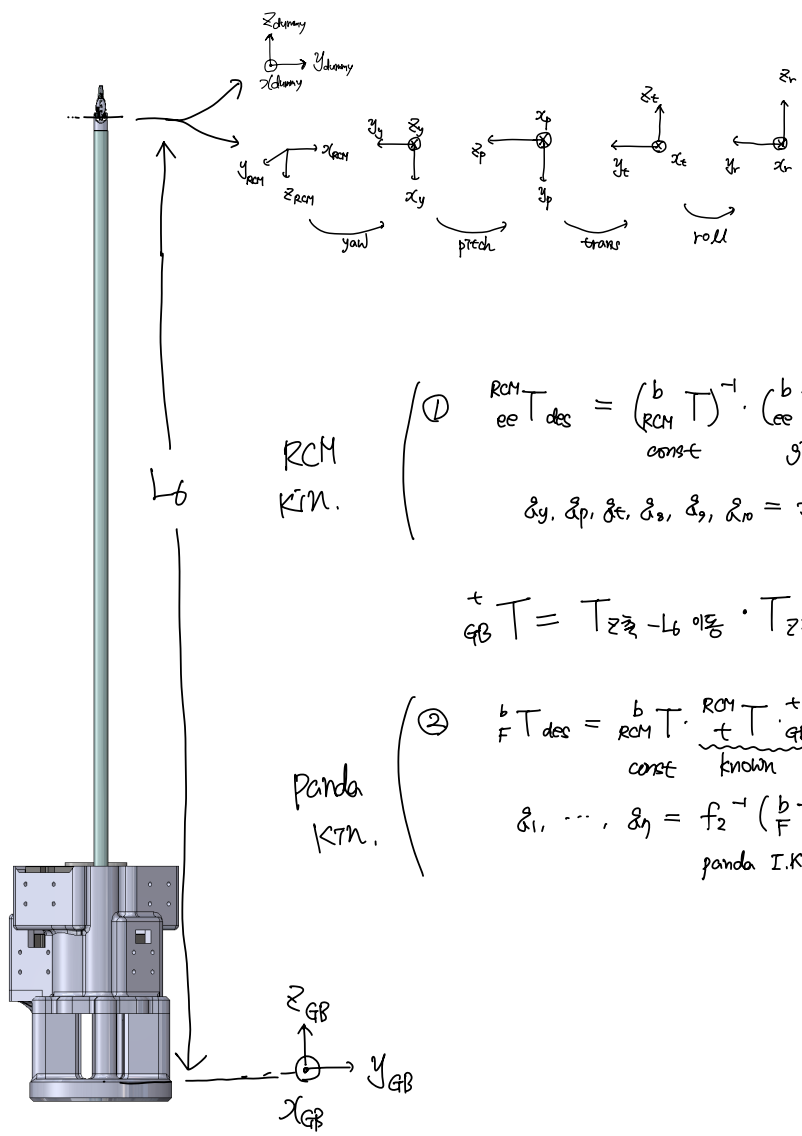

RCM kin.

① $${}^{RCM}_{ee}T_{des} = \underbrace{\left({}^{b}_{RCM}T\right)^{-1}}_{const} \cdot \underbrace{\left({}^{b}_{ee}T_{des}\right)}_{given} = \underbrace{f_1(q_y, q_p, q_t, q_8, q_9, q_{10})}_{RCM.f.k.}$$

$$q_y, q_p, q_t, q_8, q_9, q_{10} = f_1^{-1}\left({}^{RCM}_{ee}T_{des}\right)$$

$${}^{t}_{GB}T = T_{z축\ -L_6\ 이동} \cdot T_{z축,\ \pi회전}.$$

Panda kin.

② $${}^{b}_{F}T_{des} = \underbrace{{}^{b}_{RCM}T}_{const} \cdot \underbrace{{}^{RCM}_{t}T \cdot {}^{t}_{GB}T}_{known} \cdot \underbrace{\left({}^{F}_{GB}T\right)^{-1}}_{\text{depending on GB attachment}} = \underbrace{f_2(q_1, \cdots, q_7)}_{panda.f.k}$$

identity in this case

$$q_1, \cdots, q_7 = \underbrace{f_2^{-1}\left({}^{b}_{F}T_{des}\right)}_{panda\ I.K.}$$