DSD Exercise

Gauss-Seidel Iteration Machine

Speaker：Claire

Advisor：Prof. An-Yeu Wu

Date：2026/04/23

Background

- Solving large systems of linear equations is required in many engineering simulations and scientific computing applications
- Several iterative methods are used to accelerate the computing due to their simplicity, such as Jacobi Iteration, **Gauss-Seidel Iteration**

$$\begin{bmatrix} a_{11} & \cdots & a_{1N} \\ \vdots & \ddots & \vdots \\ a_{N1} & \cdots & a_{NN} \end{bmatrix} \begin{bmatrix} x_1 \\ \vdots \\ x_N \end{bmatrix} = \begin{bmatrix} b_1 \\ \vdots \\ b_N \end{bmatrix} \Longrightarrow \begin{aligned} a_{11}x_1 + a_{12}x_2 + \cdots + a_{1N}x_N &= b_1 \\ a_{21}x_1 + a_{22}x_2 + \cdots + a_{2N}x_N &= b_2 \\ &\vdots \\ a_{N1}x_1 + a_{N2}x_2 + \cdots + a_{NN}x_N &= b_N \end{aligned}$$

Gauss-Seidel Iteration Machine (GSIM)

- **Iterative method** to solve a linear system of equations

- **Ax = b** ⟹

$$A = \begin{bmatrix} a_{11} & a_{12} & \cdots & a_{1n} \\ a_{21} & a_{22} & \cdots & a_{2n} \\ \vdots & \vdots & \ddots & \vdots \\ a_{n1} & a_{n2} & \cdots & a_{nn} \end{bmatrix}, \quad \mathbf{x} = \begin{bmatrix} x_1 \\ x_2 \\ \vdots \\ x_n \end{bmatrix}, \quad \mathbf{b} = \begin{bmatrix} b_1 \\ b_2 \\ \vdots \\ b_n \end{bmatrix} \qquad (1)$$

$$a_{11}x_1 + a_{12}x_2 + \cdots + a_{1N}x_N = b_1$$
$$a_{21}x_1 + a_{22}x_2 + \cdots + a_{2N}x_N = b_2$$
$$\vdots$$
$$a_{N1}x_1 + a_{N2}x_2 + \cdots + a_{NN}x_N = b_N$$

- Expand eq (1)

$$x_1^1 = \frac{1}{a_{11}}(b_1 - a_{12}x_2^0 - \cdots - a_{1N}x_N^0)$$
$$x_2^1 = \frac{1}{a_{22}}(b_2 - a_{21}x_1^1 - a_{23}x_3^0 - \cdots - a_{2N}x_N^0)$$
$$\vdots$$
$$x_N^1 = \frac{1}{a_{NN}}(b_N - a_{N1}x_1^1 - a_{N2}x_2^1 - \cdots - a_{NN-1}x_{N-1}^1)$$

- Change the order

x_3^0: initial value of x_3

x_2^1: first iteration result of x_2

$$x_i^{k+1} = \frac{1}{a_{ii}}\left[b_i - \sum_{j=1}^{i-1} a_{ij}x_j^{k+1} - \sum_{j=i+1}^{N} a_{ij}x_j^k\right]$$

- Final equation

Project Description

Initialization | M iterations (define by yourself!) | Output result **x**

$$x^0 = \begin{bmatrix} x_1^0 \\ x_2^0 \\ \vdots \\ x_N^0 \end{bmatrix} \quad x^k = \begin{bmatrix} x_1^k \\ x_2^k \\ \vdots \\ x_N^k \end{bmatrix} \longrightarrow \boxed{\text{Gauss-Seidel Iteration}} \longrightarrow x^{k+1} = \begin{bmatrix} x_1^{k+1} \\ x_2^{k+1} \\ \vdots \\ x_N^{k+1} \end{bmatrix} \quad x^M = \begin{bmatrix} x_1^M \\ x_2^M \\ \vdots \\ x_N^M \end{bmatrix}$$

- Given a fixed 16×16 matrix **A**

$$A = \begin{bmatrix}
20 & -13 & 6 & -1 & 0 & 0 & 0 & 0 & 0 & 0 & 0 & 0 & 0 & 0 & 0 & 0 \\
-13 & 20 & -13 & 6 & -1 & 0 & 0 & 0 & 0 & 0 & 0 & 0 & 0 & 0 & 0 & 0 \\
6 & -13 & 20 & -13 & 6 & -1 & 0 & 0 & 0 & 0 & 0 & 0 & 0 & 0 & 0 & 0 \\
-1 & 6 & -13 & 20 & -13 & 6 & -1 & 0 & 0 & 0 & 0 & 0 & 0 & 0 & 0 & 0 \\
0 & -1 & 6 & -13 & 20 & -13 & 6 & -1 & 0 & 0 & 0 & 0 & 0 & 0 & 0 & 0 \\
0 & 0 & -1 & 6 & -13 & 20 & -13 & 6 & -1 & 0 & 0 & 0 & 0 & 0 & 0 & 0 \\
0 & 0 & 0 & -1 & 6 & -13 & 20 & -13 & 6 & -1 & 0 & 0 & 0 & 0 & 0 & 0 \\
0 & 0 & 0 & 0 & -1 & 6 & -13 & 20 & -13 & 6 & -1 & 0 & 0 & 0 & 0 & 0 \\
0 & 0 & 0 & 0 & 0 & -1 & 6 & -13 & 20 & -13 & 6 & -1 & 0 & 0 & 0 & 0 \\
0 & 0 & 0 & 0 & 0 & 0 & -1 & 6 & -13 & 20 & -13 & 6 & -1 & 0 & 0 & 0 \\
0 & 0 & 0 & 0 & 0 & 0 & 0 & -1 & 6 & -13 & 20 & -13 & 6 & -1 & 0 & 0 \\
0 & 0 & 0 & 0 & 0 & 0 & 0 & 0 & -1 & 6 & -13 & 20 & -13 & 6 & -1 & 0 \\
0 & 0 & 0 & 0 & 0 & 0 & 0 & 0 & 0 & -1 & 6 & -13 & 20 & -13 & 6 & -1 \\
0 & 0 & 0 & 0 & 0 & 0 & 0 & 0 & 0 & 0 & -1 & 6 & -13 & 20 & -13 & 6 \\
0 & 0 & 0 & 0 & 0 & 0 & 0 & 0 & 0 & 0 & 0 & -1 & 6 & -13 & 20 & -13 \\
0 & 0 & 0 & 0 & 0 & 0 & 0 & 0 & 0 & 0 & 0 & 0 & -1 & 6 & -13 & 20
\end{bmatrix}$$

By the previous equation:

$$x_1^1 = \frac{1}{20}[b_1 + 13(x_2^0 + 0) - 6(x_3^0 + 0) + (x_4^0 + 0)]$$
$$x_2^1 = \frac{1}{20}[b_2 + 13(x_3^0 + x_1^1) - 6(x_4^0 + 0) + (x_5^0 + 0)]$$
$$x_3^1 = \frac{1}{20}[b_3 + 13(x_4^0 + x_2^1) - 6(x_5^0 + x_1^1) + (x_6^0 + 0)]$$
$$x_4^1 = \frac{1}{20}[b_4 + 13(x_5^0 + x_3^1) - 6(x_6^0 + x_2^1) + (x_7^0 + x_1^1)]$$
$$\vdots$$
$$x_{16}^1 = \frac{1}{20}[b_{16} + 13(0 + x_{15}^1) - 6(0 + x_{14}^1) + (0 + x_{13}^1)]$$

At most 7 non-zero terms one time

Only divided by 20

Specification

- Read doc.pdf for further information

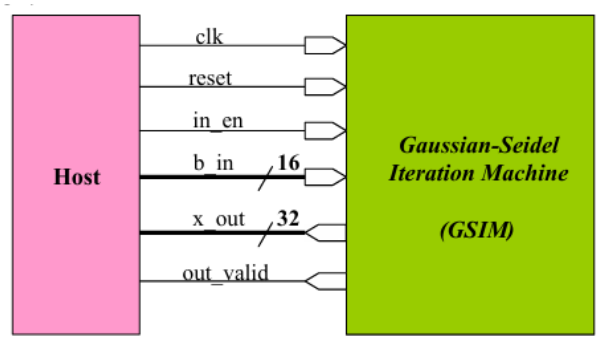

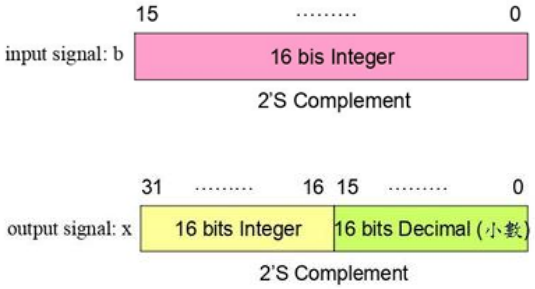

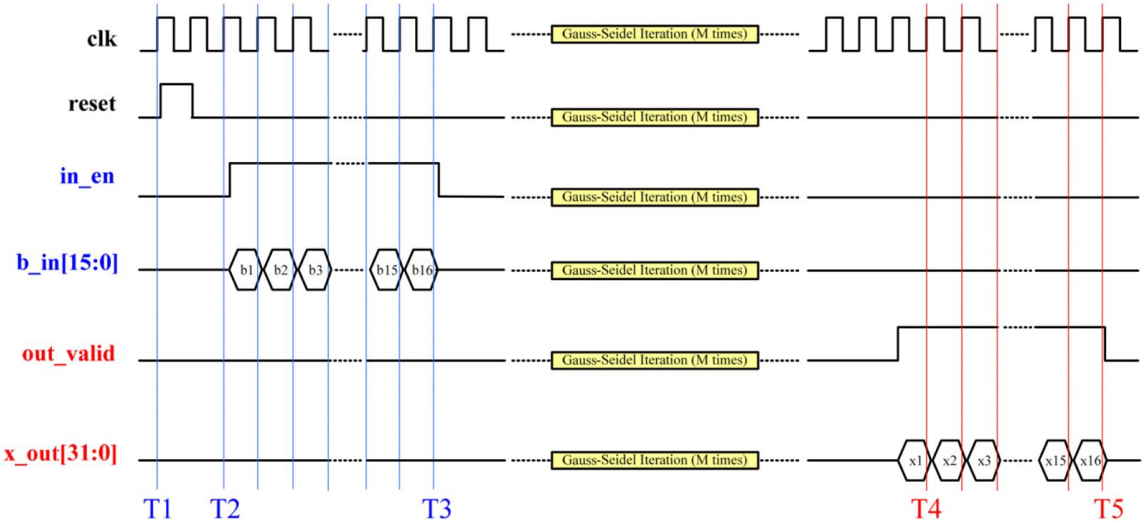

Design Guidelines

- Architecture level
  - Data path scheduling
  - Parallel processing (unfolding)
  - Pipelining
- Computation unit level
  - Constant multiplier, constant divider
  - Decimal analysis

Architecture Level Optimization (1/3)

- Reading data
  - Arbitrary reading: Using several MUXs to load data
  - Structural reading: Similar computation dataflow

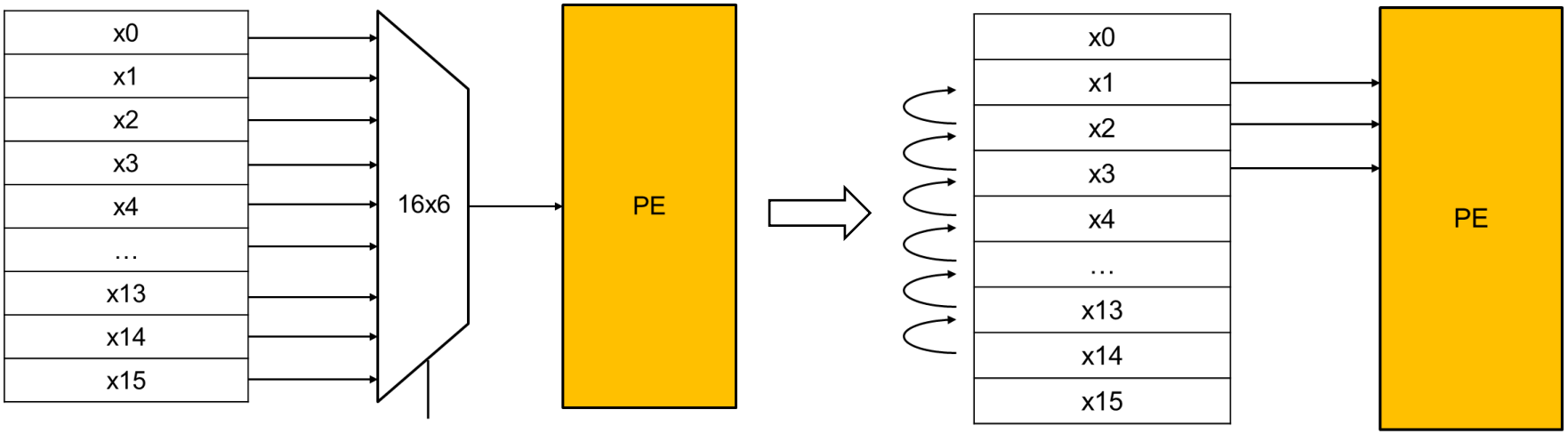

Scheduling by removing 6 MUXs

Architecture Level Optimization (2/3)

- Parallel processing (unfolding)
  - Using multi-core to compute
  - Necessity: No data dependency
- Reordering computation
  - Processing elements: 1, 5, 9, 13, …

20	-13	6	-1	0	0	0	0	0	0	0	0	0	0	0	0
-13	20	-13	6	-1	0	0	0	0	0	0	0	0	0	0	0
6	-13	20	-13	6	-1	0	0	0	0	0	0	0	0	0	0
-1	6	-13	20	-13	6	-1	0	0	0	0	0	0	0	0	0
0	-1	6	-13	20	-13	6	-1	0	0	0	0	0	0	0	0
0	0	-1	6	-13	20	-13	6	-1	0	0	0	0	0	0	0
0	0	0	-1	6	-13	20	-13	6	-1	0	0	0	0	0	0
0	0	0	0	-1	6	-13	20	-13	6	-1	0	0	0	0	0
0	0	0	0	0	-1	6	-13	20	-13	6	-1	0	0	0	0
0	0	0	0	0	0	-1	6	-13	20	-13	6	-1	0	0	0
0	0	0	0	0	0	0	-1	6	-13	20	-13	6	-1	0	0
0	0	0	0	0	0	0	0	-1	6	-13	20	-13	6	-1	0
0	0	0	0	0	0	0	0	0	-1	6	-13	20	-13	6	-1
0	0	0	0	0	0	0	0	0	0	-1	6	-13	20	-13	6
0	0	0	0	0	0	0	0	0	0	0	-1	6	-13	20	-13
0	0	0	0	0	0	0	0	0	0	0	0	-1	6	-13	20

Core 1

20	0	0	0	-13	0	0	0
0	20	0	0	-1	-13	0	0
0	0	20	0	0	-1	-13	0
0	0	0	20	0	0	-1	-13
-13	-1	0	0	20	0	0	0
0	-13	-1	0	0	20	0	0
0	0	-13	-1	0	0	20	0
0	0	0	-13	0	0	0	20
6	6	0	0	-13	-1	0	0
0	6	6	0	0	-13	-1	0
0	0	6	6	0	0	-13	-1
0	0	0	6	0	0	0	-13
-1	-13	0	0	6	6	0	0
0	-1	-13	0	0	6	6	0
0	0	-1	-13	0	0	6	6
0	0	0	-1	0	0	0	6

Core 2

6	0	0	0	-1	0	0	0
6	6	0	0	-13	-1	0	0
0	6	6	0	0	-13	-1	0
0	0	6	6	0	0	-13	-1
-13	0	0	0	6	0	0	0
-1	-13	0	0	6	6	0	0
0	-1	-13	0	0	6	6	0
0	0	-1	-13	0	0	6	6
20	0	0	0	-13	0	0	0
0	20	0	0	-1	-13	0	0
0	0	20	0	0	-1	-13	0
0	0	0	20	0	0	-1	-13
-13	-1	0	0	20	0	0	0
0	-13	-1	0	0	20	0	0
0	0	-13	-1	0	0	20	0
0	0	0	-13	0	0	0	20

rescheduling

Architecture Level Optimization (3/3)

- Pipelining
  - Divide computation into several cycles

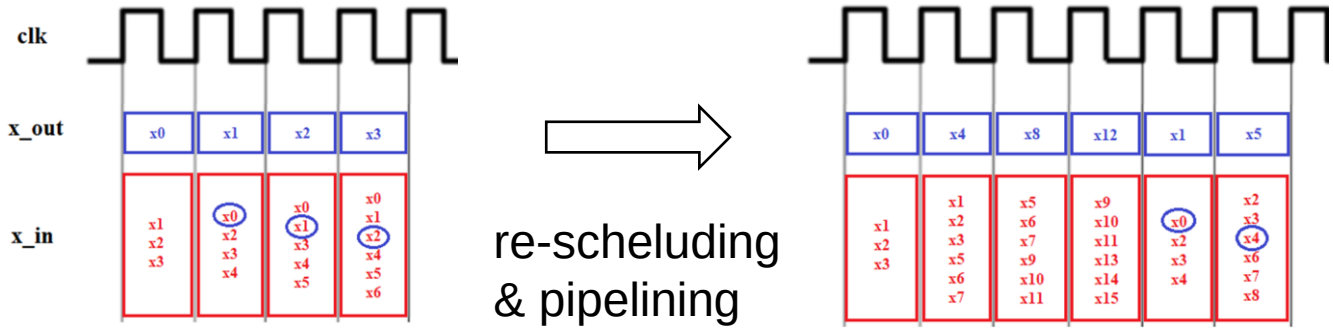

e.g. 3-stages pipeling

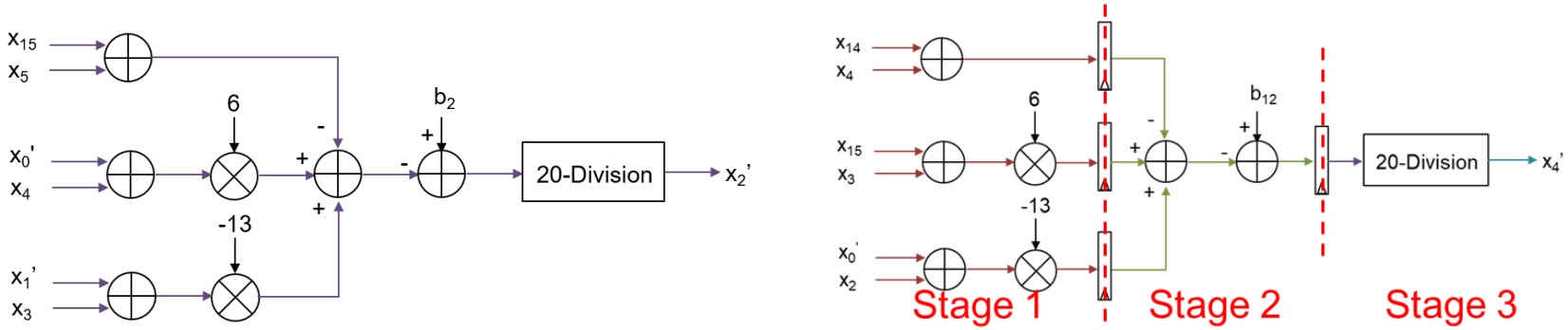

Computation Unit Level (1/2)

1 Division 2 Multiplication

$$Ex:\ x_4^1 = \frac{1}{20}[b_4 + 13\times(x_5^0 + x_3^1) + (-6)\times(x_6^0 + x_2^1) + (x_7^0 + x_1^1)]$$

Computation flow

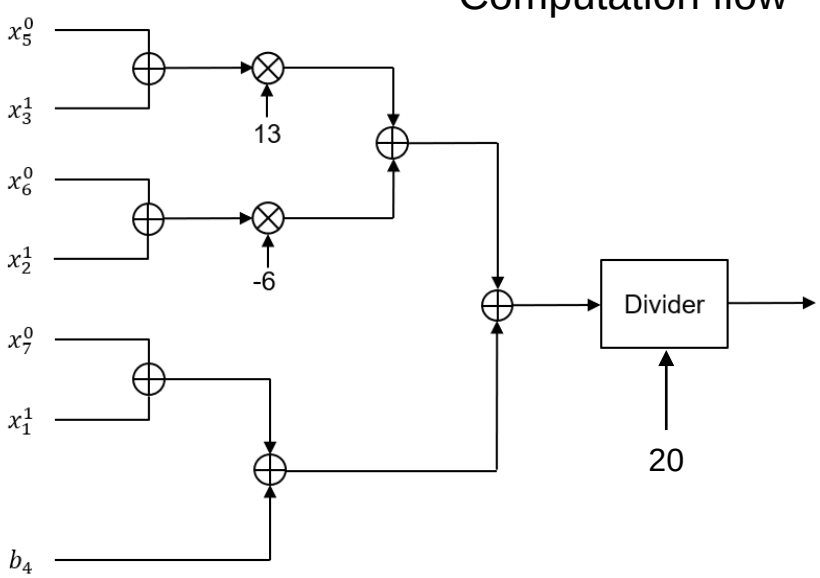

Division and multiplication is complicated.
It need large area and long computation time.

Provided Files (1/2)

- DSD_Exercise/
  - /00_TB/
    - Five testbench (testfixture1.v ~ testfixture5.v) and related patterns
  - /01_RTL/
    - GSIM.v **// You need to finished RTL coding**
    - Use ./01_run to select testbench and run RTL simulation
  - /02_SYN/ **// Make sure there is no negative slack**
    - Synthesis files for 0.13um process
    - You can *only* change the clock period in GSIM_DC.sdc
    - syn.tcl can be modified
  - /03_GATE/ **// sdf file is correctly annotated, no timing violation**
    - Gate-level simulation for 0.13um process
    - Use ./03_run to select testbench and run gate-level simulation

Provided Files (2/2)

- DSD_Exercise/
  - /02_SYN_ADFP/ **// Make sure there is no negative slack**
    - Synthesis files for N16 process
    - You can *only* change the clock period in GSIM_DC.sdc
    - syn.tcl can be modified
  - /03_GATE_ADFP/ **// sdf file is correctly annotated, no timing violation**
    - Gate-level simulation for N16 process
    - Use ./03_run to select testbench and run gate-level simulation
  - Performance.txt
    - Fill in your clock period and synthesis area
  - source.cshrc
    - License for 0.13um process

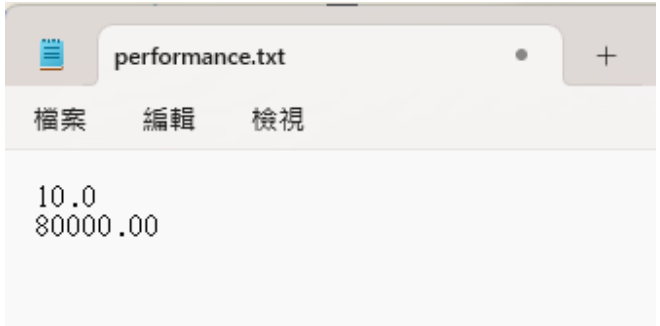

Reminder

- Pass all 5 provided testbenches within acceptable error rate.
- **Do not hard-code** results (hidden patterns will be used for grading).
- **No latches or negative slack** during synthesis.
- **No timing violations** in gate-level simulation.
- Ensure **correct SDF annotation** for gate-level simulation.

```
Inferred memory devices in process
        in routine GSIM line 146 in file
                '../01_RTL/GSIM.v'.
===============================================================================
|    Register Name     |    Type    | Width | Bus | MB | AR | AS | SR | SS | ST |
===============================================================================
|       x_r_reg        | Flip-flop  |  512  |  Y  | N  | Y  | N  | N  | N  | N  |
|       b_r_reg        | Flip-flop  |  256  |  Y  | N  | Y  | N  | N  | N  | N  |
===============================================================================

Inferred memory devices in process
        in routine GSIM line 227 in file
                '../01_RTL/GSIM.v'.
===============================================================================
|    Register Name     |    Type    | Width | Bus | MB | AR | AS | SR | SS | ST |
===============================================================================
|      state_reg       | Flip-flop  |   2   |  Y  | N  | Y  | N  | N  | N  | N  |
|      count_reg       | Flip-flop  |   9   |  Y  | N  | Y  | N  | N  | N  | N  |
===============================================================================
Statistics for MUX_OPs
```

```
clock clk (rise edge)                          1.50       1.50
clock network delay (ideal)                    0.50       2.00
clock uncertainty                             -0.10       1.90
x_r_reg_15__31_/CP (DFCNQD1BWP16P90)           0.00       1.90 r
library setup time                            -0.02       1.88
data required time                                       1.88
-------------------------------------------------------------
data required time                                       1.88
data arrival time                                       -1.88
-------------------------------------------------------------
slack (MET)                                              0.00
```

```
***    $sdf_annotate() version 1.2R
***    SDF file: "../02_SYN_ADFP/GSIM_syn.sdf"
***    Annotation scope: test_GSIM
***    No MTM selection argument specified
***    No SCALE FACTORS argument specified
***    No SCALE TYPE argument specified
***    MTM selection defaulted to "TOOL_CONTROL":
            (+maxdelays compiled, MAXIMUM delays selected)
***    SCALE FACTORS defaulted to "1.0:1.0:1.0":
***    SCALE TYPE defaulted to: "FROM_MTM"
***    Turnoff delay: "FROM_FILE"
***    Approximation (mipd) policy: "MAXIMUM"

***    SDF annotation begin: Thu Apr  2 21:50:21 2026

SDF Info: +pulse_r/100, +pulse_e/100 in effect

       Total errors: 0
       Total warnings: 0
***    SDF annotation completed: Thu Apr  2 21:50:21 2026
```

Grading Criteria

- 評分一：Error rate E^2
  - $E^2 = \sum_{i=1}^{16}\sum_{j=1}^{16}\left(a_{ij}x_j^k - b_i\right)^2$
  - Achieve Level A

A 級：			E^2	< 0.000001
B 級：	0.000001	$\leqq$	E^2	< 0.000005
C 級：	0.000005	$\leqq$	E^2	< 0.000010
D 級：	0.000010	$\leqq$	E^2	< 0.000050
E 級：	0.000050	$\leqq$	E^2	< 0.000100
F 級：	0.000100	$\leqq$	E^2	< 0.001000
G 級：	0.001000	$\leqq$	E^2	< 0.005000
H 級：	0.005000	$\leqq$	E^2	< 0.010000
I 級：	0.010000	$\leqq$	E^2	< 0.100000
J 級：	0.100000	$\leqq$	E^2	< 0.300000
K 級：	0.300000	$\leqq$	E^2	

- 評分二：AT score (on **N16 ADFP**)
  - $AT = area \times total\ timing$
  - Area: synthesis cell area
  - Timing: total execution time(ns) (tb1+tb2+…+tb5)

```
So Your Error Ratio=  0.000000525964424

----------------------------------------------------

Your Score Level: A

Congratulations! GSIM's Function Successfully!

-------------------------PASS-------------------------

$finish called from file "../00_TB/testfixture1.v", line 220.
$finish at simulation time                 495750
           V C S   S i m u l a t i o n   R e p o r t
Time: 495750 ps
CPU Time:      1.340 seconds;       Data structure size:   2.
```

Combinational area:	3875.164193
Buf/Inv area:	434.534396
Noncombinational area:	1147.442383
Macro/Black Box area:	0.000000
Net Interconnect area:	48580.242432
Total cell area:	5022.606576
Total area:	53602.849008

Grading Policy

- RTL (40%): Function correctness, Rank A
  - 10% for hidden tb

    *Without RANK A in hidden patterns, only partial credit.
- Synthesis (40%):
  - 10% for hidden tb

    *Without RANK A in hidden patterns, only partial credit.
  - 20% for passing weak baseline AT score: 1.0×10^8
  - 10% for passing strong baseline AT score: 1.0×10^7
- Ranking (15%): AT ranking. Get 0% if not passing all the hiddens
- Report (5%)

report.pdf

1. AT score

- $AT = area \times timing$
- Area: total cell area (screenshot)
- Timing: total execution time (tb1 + tb2 + … + tb5)

2. Design Methodology

- Algorithm, Hardware Architecture….
- How do you improve your AT score

3. Difference between 0.13μm technology and 16nm ADFP

- Area comparison
- Timing comparison
- Design methodology

4. Any findings and discussions

performance.txt

1. **Simulated cycle time (ns)**
   - Gate-level simulation clock cycle

   (i.e. The cycle you passed testbench after synthesis)
2. **Area (um^2)**
   - report_area

performance.txt

檔案 編輯 檢視

```
10.0
80000.00
```

Combinational area:	3875.164193
Buf/Inv area:	434.534396
Noncombinational area:	1147.442383
Macro/Black Box area:	0.000000
Net Interconnect area:	48580.242432
Total cell area:	5022.606576
Total area:	53602.849008

Submission – NTUCOOL

- report.pdf
- Only one member of each group needs to upload
- Deadline: 2025/05/03 23:59 ※Late submission is not allowed

Submission – 16nm ADFP

- *dsdxx/* *xx is your group number (00~18)*
  - *GSIM.v*
  - *GSIM _syn.v*
  - *GSIM _syn.sdf*
  - *GSIM _syn.ddc*
  - *performance.txt*
- Compress all the files into one **tar.gz** file

```
> tar -zcvf dsdxx.tar.gz dsdxx/
```

- Put the tar.gz file in your **"Home"** directory
- Deadline: 2025/05/03 23:59 ※Late submission is not allowed
- If you have any problem with homework 1, ask questions through the NTUCOOL 討論區 or send email to yachi@access.ee.ntu.edu.tw

Notice

- The tsmc13_neg.v file is not allowed to be downloaded! Or you may offend the copyright protected by NTU & TSRI!
- Please follow the rules on ADFP server