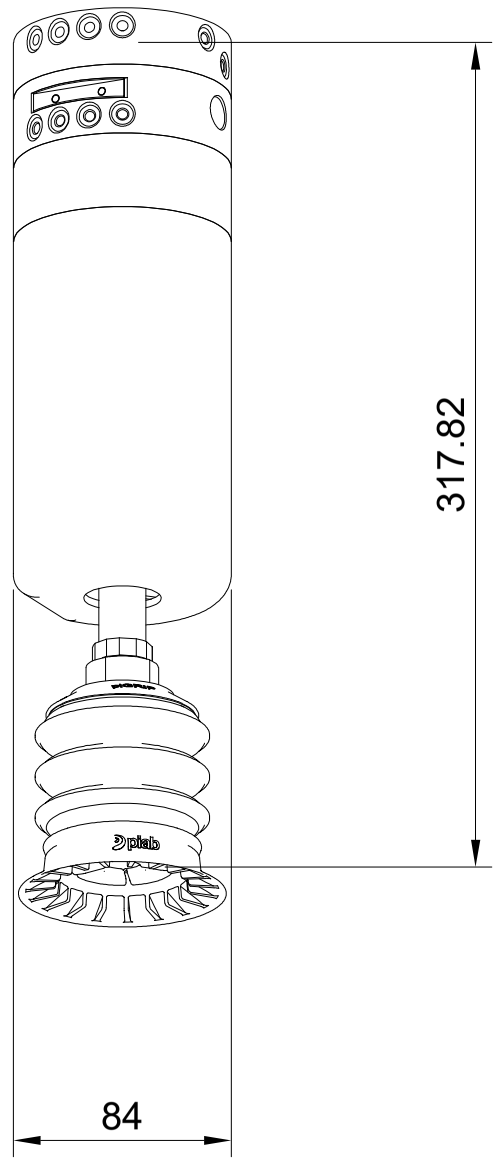

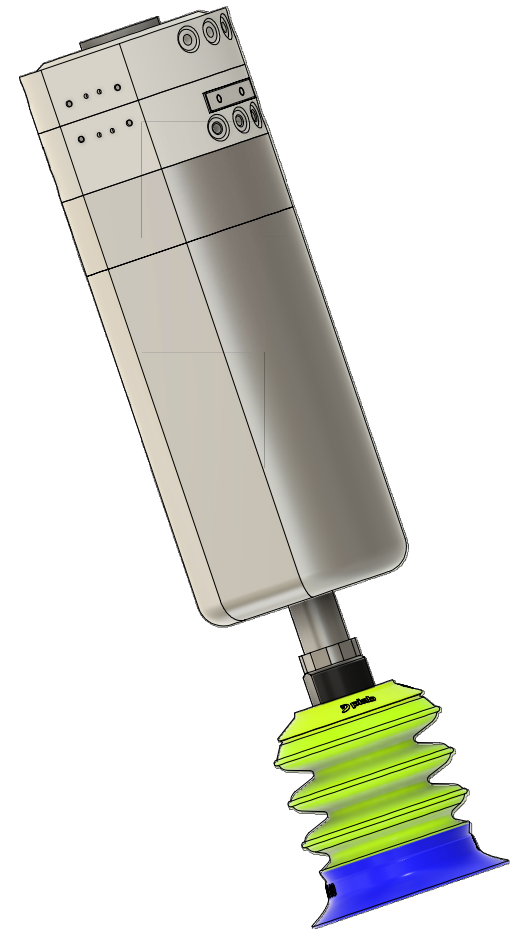

Dimensions in mm

Single suction cup vacuum gripper assembly designed in Fusion 360. Components include RMTA tool changer, Piab COAX vacuum generator, LC25 level compensator, and piGRIP suction cup. The UR15 robot arm attaches to the top of this assembly.

Dept.	Technical reference	Created by Christina Cavalluzzo 3/16/2026	Approved by
		Document type	Document status
		Title Vacuum Gripper Assembly	DWG No.
			Rev. / Date of issue / Sheet 1/1