**CONTENTS**


| DESCRIPTION | SCHEMATIC NO. | SECTION / PAGE |
|---|---|---|
| FUNCTION DIAGRAM B780 | | 5/03 |
| POWER SUPPLY UNIT | 1.780.110 | 5/04 |
| – POWER SUPPLY PCB | 1.166.210-81 | 5/04 |
| – POWER DISTRIBUTION PCB | 1.780.190 | 5/04 |
| – MAINS TRANSFORMER | 1.780.120 | 5/05 |
| THRESHOLD CONTROL BOARD | 1.780.235 | 5/06 |
| STATION SELECTION KEYBOARD | 1.780.225 | 5/07 |
| PUSH BUTTON BOARD / FM MODE | 1.780.220 | 5/08 |
| PUSH BUTTON BOARD / OUTPUT SELECTION | 1.780.240 | 5/09 |
| INPUT SELECTION KEYBOARD | 1.780.230 | 5/09 |
| MICROCOMPUTER PCB | 1.780.260 | 5/10 |
| FREQUENCY SYNTHESIZER PCB | 1.780.151–81 | 5/12 |
| METER CIRCUIT AND DEEMPHASIS PCB | 1.780.155 | 5/14 |
| DISPLAY PCB | 1.780.245 | 5/16 |
| ANTENNA INPUT UNIT: | | |
| (LOCATED ON SPEAKER PROTECTION UNIT) | 1.780.140–81 | |
| RF FRONT END PCB | 1.166.100 | 5/18 |
| IF AMPLIFIER PCB | 1.166.120 | 5/20 |
| FM DEMODULATOR PCB | 1.166.130 | 5/22 |
| STEREO DECODER PCB | 1.166.150 | 5/24 |
| AUDIO CONNECTION UNIT | 1.780.145 | 5/26 |
| PREAMPLIFIER PCB | 1.780.205 | 5/28 |
| – FILTER PCB | 1.780.215-81 | 5/29 |
| TONE CONTROL PCB | 1.780.210 | 5/32 |
| POWER AMPLIFIER PCB | 1.780.105 | 5/34 |
| SPEAKER PROTECTION UNIT | 1.780.140–81 | 5/36 |
| DOLBY PROCESSOR PCB | 1.166.400 | 5/38 |
| – DUMMY PLUG | 1.166.090 | 5/38 |
| ANTENNA CONTROL INTERFACE PCB | 1.780.400 | 5/40 |
| POWER-ON REMOTE CONTROL PCB | 1.780.430 | 5/42 |
| WIRE HARNESS / FRONT | 1.780.170 | 5/43 |
| WIRE HARNESS / REAR | 1.780.166 | 5/44 |
| FUNCTION DIAGRAM B739 | | 5/47 |
| POWER SUPPLY UNIT | 1.166.200 | 5/48 |
| – POWER SUPPLY PCB | 1.166.210-81 | 5/48 |
| – POWER DISTRIBUTION PCB | 1.166.206-81 | 5/48 |
| – MAINS TRANSFORMER | 1.166.201 | 5/49 |
| PREAMPLIFIER PCB | 1.780.835 | 5/50 |
| – FILTER PCB | 1.780.215-81 | 5/51 |
| LINE AMPLIFIER AND CONNECTION UNIT | 1.780.840 | 5/54 |
| WIRE HARNESS / REAR | 1.780.820 | 5/56 |
| VOCABULARY OF ABBREVIATIONS | | 5/58 |
| BLOCK DIAGRAM | | inside back cover |




www.hifiengine.com

## FUNCTION DIAGRAM

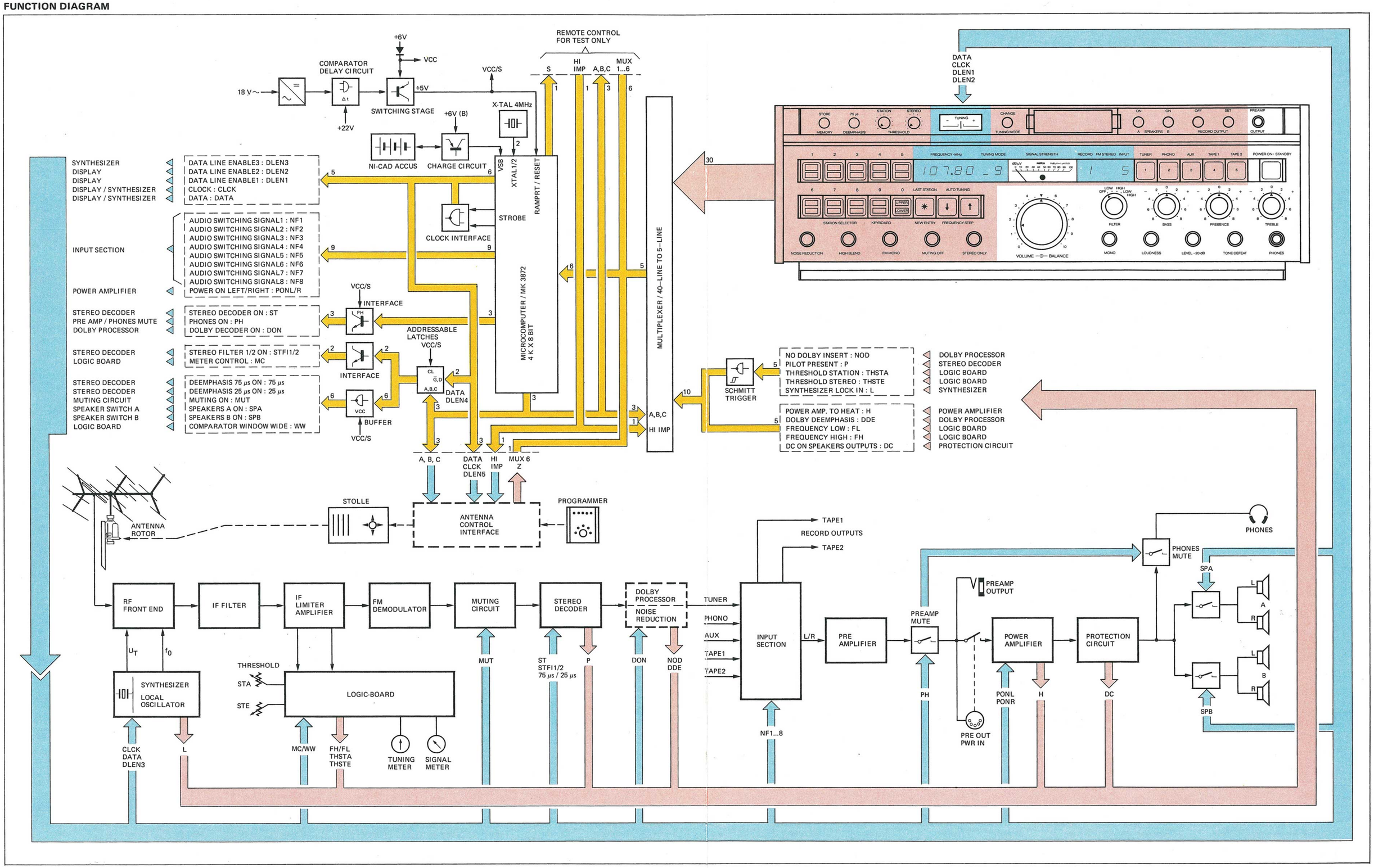


Noise reduction system manufactured under license from Dolby Laboratories. Dolby and the double-D symbol are trademarks of Dolby Laboratories.

## POWER SUPPLY UNIT 1.780.110

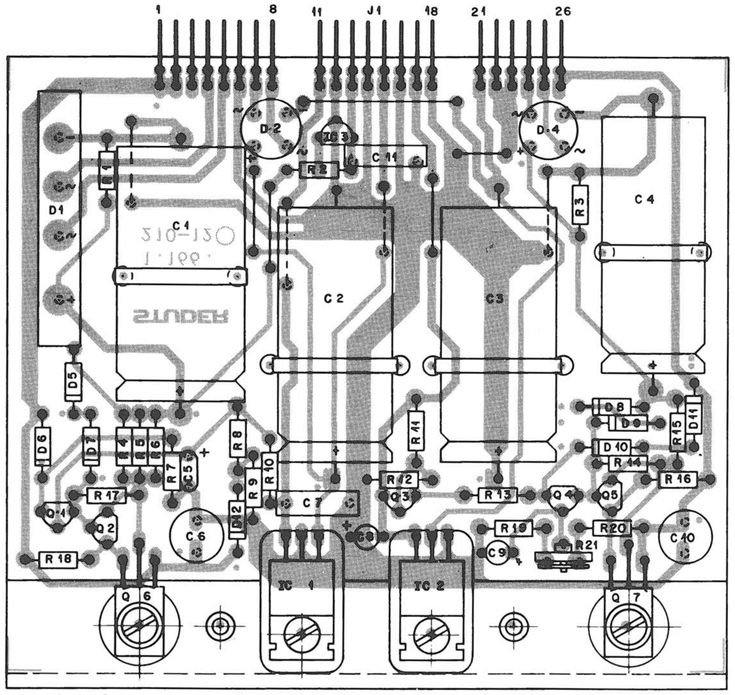


1.166.210 - 81

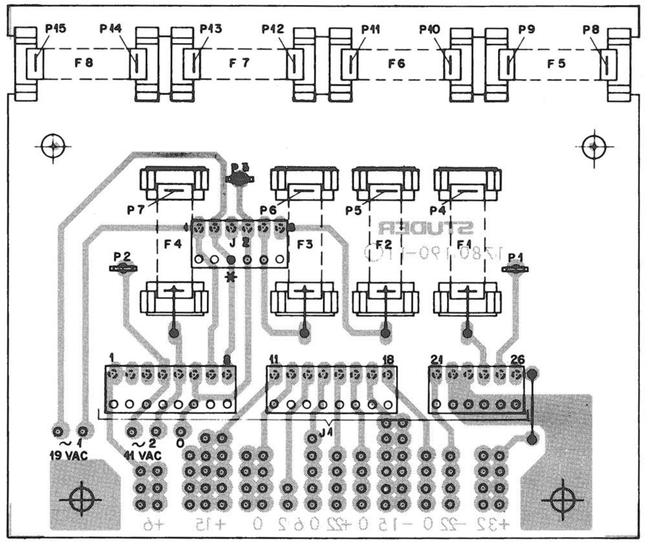


1.780.190

F1: 200mAT
F2,3: 800mAT
F4: 2AT
F5...8: 3,15AT
J1: 2 x 54.01.0289 8 POLE
1 x 54.01.0216 6 POLE
J2: 54.01.0216 6 POLE

| IND | POS NO | PART NO | VALUE | SPECIFICATIONS/EQUIVALENT | MFR |
|---|---|---|---|---|---|
| | C 1 | 59.25.3472 | 4700 µF | EL 16 V | |
| | C 2 | 59.25.4222 | 2200 µF | " 25 V | |
| | C 3 | " " " | " | " " | |
| | C 4 | 59.25.6471 | 470 µF | " 63 V | |
| 4,1 | C 5 | 59.32.3103 | 0.01 µF | CER 40 V | |
| | C 6 | 59.22.5470 | 47 µF | EL 25 V | |
| | C 7 | 59.31.1104 | 0.1 µF | PE 100 V | |
| 6 | C 8 | 59.30.6339 | 3.3 µF | TA 35 V | |
| | C 9 | 59.30.6100 | 10 µF | " " | |
| | C 10 | 59.22.6220 | 22 µF | EL 40 V | |
| | C 11 | 59.31.1104 | 0.1 µF | PE 100 V | |
| | | | | | |
| 5 | D 1 | 70.01.0235 | BR. Rect. | B 80 C 3700/2200 Si | SI |
| | D 2 | 70.01.0223 | " " | B 250 C 800 Si | GI |
| 1 | D 3 | ——— | | | |
| | D 4 | 70.01.0223 | " " | " " " | |
| | D 5 | 50.04.0125 | 1N 4148 | Si Diode 100 V, 100 mA | GI |
| | D 6 | " " " | " | " " " | |
| | D 7 | " " " | " | " " " | |
| | D 8 | " " " | " | " " " | |
| | D 9 | " " " | " | " " " | |
| | D 10 | " " " | " | " " " | |
| | D 11 | 50.04.1108 | Z 5.6 | Zenerdiode 5.6 V 0.4 W 5% | |
| | D 12 | 50.04.0125 | 1N 4148 | Si Diode 100 V 100 mA | |
| | | | | | |
| | IC 1 | 50.05.0253 | 78 M 15 UC | +15 Voltage Regulator | F, TI |
| | IC 2 | 50.05.0252 | 79 M 15 AVC | −15 " " | " " |
| 3 | IC 3 | 50.10.0101 | 78L06ACS | +6.2 " " | TI |
| | | | | | |
| | | | | | |

| IND | DATE | NAME |
|---|---|---|
| ○ | | |
| ○ | | |
| ⑥ | 3.6.80 | Rom. |
| ⑤ | 3.1.80 | Há. |
| ○ | 6.10.77 | Bal. |

EL = Electrolytic SI = Siemens
CER = Ceramic GI = General Instr.
PE = Polyester F = Fairchild
TA = solid Tantalum TI = Texas Instr.

STUDER Power Supply PL 1.166.210-81 PAGE 1 OF 2

| IND | POS NO | PART NO | VALUE | SPECIFICATIONS/EQUIVALENT | MFR |
|---|---|---|---|---|---|
| | Q 1 | 50.03.0436 | BC 107 B | NPN Si | |
| | Q 2 | 50.03.0312 | BC 178 B | NPN Si | |
| | Q 3 | 50.03.0436 | BC 107 B | NPN Si | |
| | Q 4 | 50.03.0491 | BC 546 | NPN Si | |
| | Q 5 | 50.03.0492 | BC 446 | PNP Si | |
| | Q 6 | 50.03.0493 | BD 561 | NPN Si | |
| | Q 7 | 50.03.0445 | BD 177 | NPN Si | |
| | | | | | |
| | R 1 | 57.41.4102 | 1 kΩ | 5% | |
| 2,3 | R 2 | — | | " | |
| | R 3 | 57.41.4103 | 10 kΩ | " | |
| | R 4 | 57.41.4129 | 1.2 Ω | " | |
| | R 5 | 57.41.4129 | 1.2 Ω | " | |
| | R 6 | 57.41.4129 | 1.2 Ω | " | |
| | R 7 | 57.41.4821 | 820 Ω | " | |
| | R 8 | 57.41.4561 | 560 Ω | " | |
| | R 9 | 57.39.8451 | 8450 Ω | 1% MF | |
| | R 10 | 57.39.1432 | 14.3 kΩ | 1% MF | |
| | R 11 | 57.41.4102 | 1 kΩ | 5% | |
| | R 12 | 57.41.4103 | 10 kΩ | " | |
| | R 13 | 57.41.4103 | 10 kΩ | " | |
| | R 14 | 57.41.4102 | 1 kΩ | " | |
| | R 15 | 57.41.4339 | 3.3 Ω | " | |
| | R 16 | 57.41.4561 | 560 Ω | " | |
| | R 17 | 57.41.4102 | 1 kΩ | " | |
| | R 18 | 57.41.4561 | 560 Ω | " | |
| | R 19 | 57.41.4562 | 5.6 kΩ | " | |
| | R 20 | 57.41.4102 | 1 kΩ | " | |
| | R 21 | 58.02.4471 | 470 Ω | CF Potentiometer | |
| | | | | | |
| | | | | | |

| IND | DATE | NAME |
|---|---|---|
| ④ | | |
| ③ | | |
| ② | | |
| ① | | |
| ⑥ | 3.6.80 | Rom. |

CF = Carbon Film

STUDER Power Supply PL 1.166.210-81 PAGE 2 OF 2

POWER SUPPLY UNIT 1.780.110

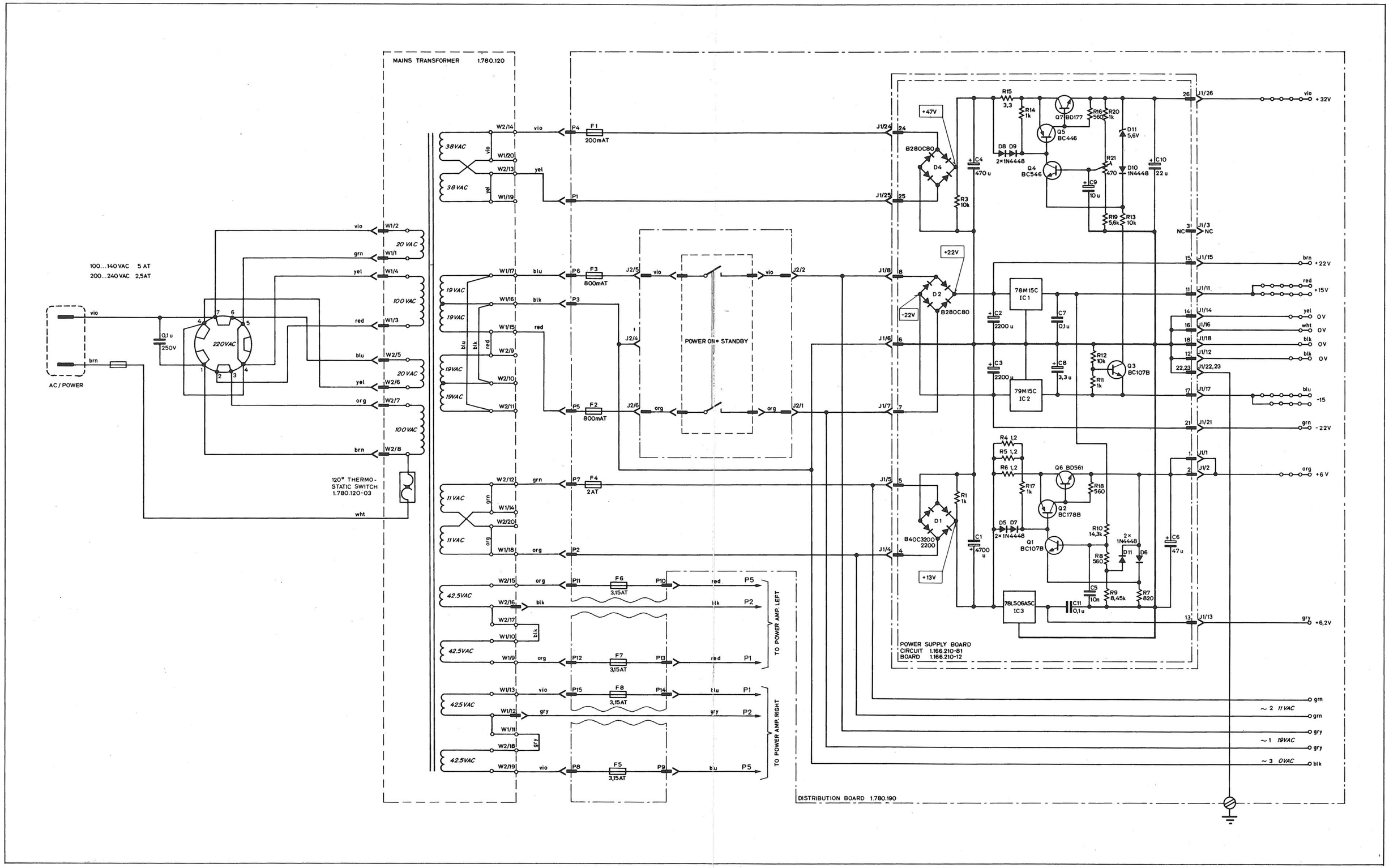

## THRESHOLD CONTROL BOARD 1.780.235

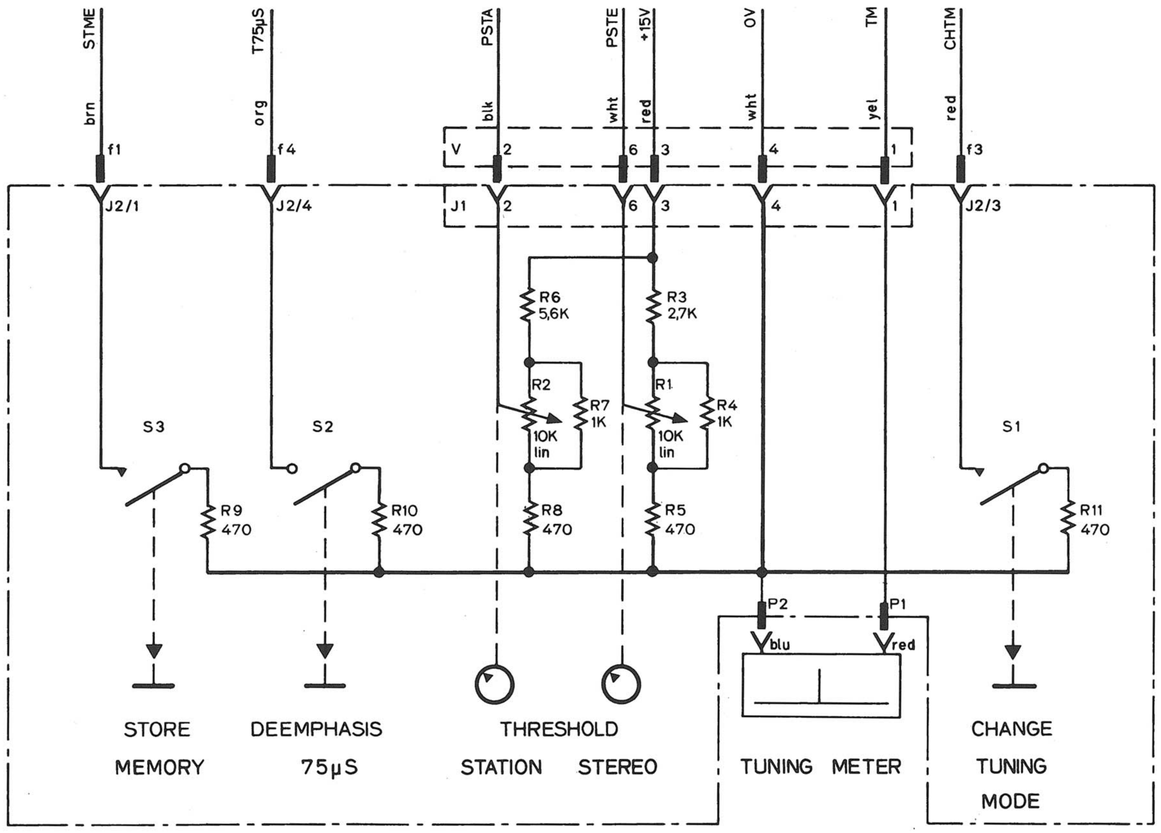


| IND | POS NO | PART NO | VALUE | SPECIFICATIONS/EQUIVALENT | MFR |
|---|---|---|---|---|---|
| | J1 | 54.01.0214 | 6 POLE | C/S | |
| | J2 | 54.01.0304 | 4 POLE | C/S | |
| | P1 | 54.02.0320 | 2,8x0,8 | | |
| | P2 | 54.02.0320 | 2,8x0,8 | | |
| | R1 | 1.780.235.03 | 10kΩ | PCF LIN. 20% | ST |
| | R2 | 1.780.235.03 | 10kΩ | PCF LIN. 20% | ST |
| | R3 | 57.11.4272 | 2,7kΩ | 5% | |
| | R4 | 57.11.4102 | 1kΩ | 5% | |
| | R5 | 57.11.4471 | 470Ω | 5% | |
| | R6 | 57.11.4562 | 5,6kΩ | 5% | |
| | R7 | 57.11.4102 | 1kΩ | 5% | |
| | R8 | 57.11.4471 | 470Ω | 5% | |
| | R9 | 57.11.4471 | 470Ω | 5% | |
| | R10 | 57.11.4471 | 470Ω | 5% | |
| | R11 | 57.11.4471 | 470Ω | 5% | |
| | S1 | 1.780.235-02 | PUSH BUTTON SWITCH | | ST |
| | S2/S3 | 1.780.235-01 | PUSH BUTTON SWITCH | | ST |

| IND | DATE | NAME |
|---|---|---|
| 4 | | |
| 3 | | |
| 2 | | |
| 1 | | |
| 0 | 17.5.79 | |

ST = STUDER
PCF = POT'M. CARBON FILM

STUDER | THRESHOLD CONTROL BOARD | 1.780.235 | PAGE 1 OF 1

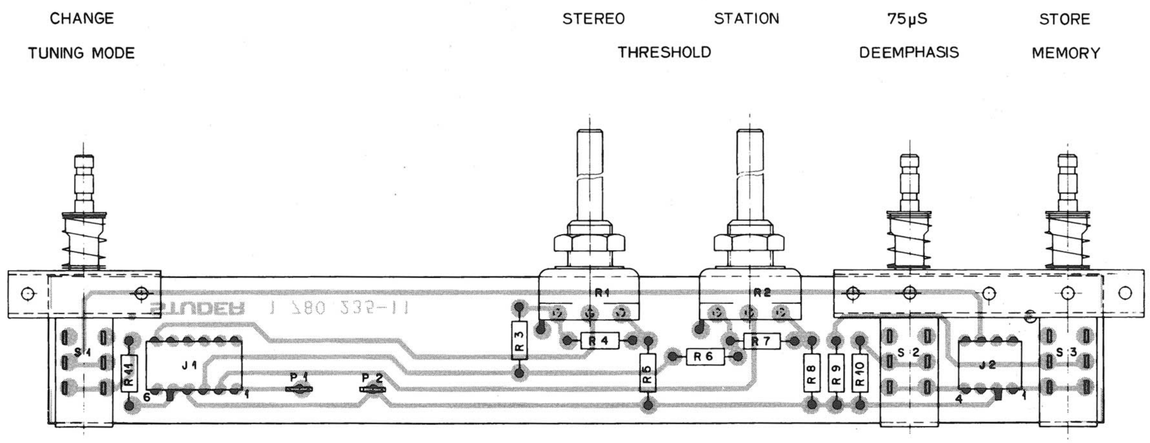

## STATION SELECTION KEYBOARD 1.780.225

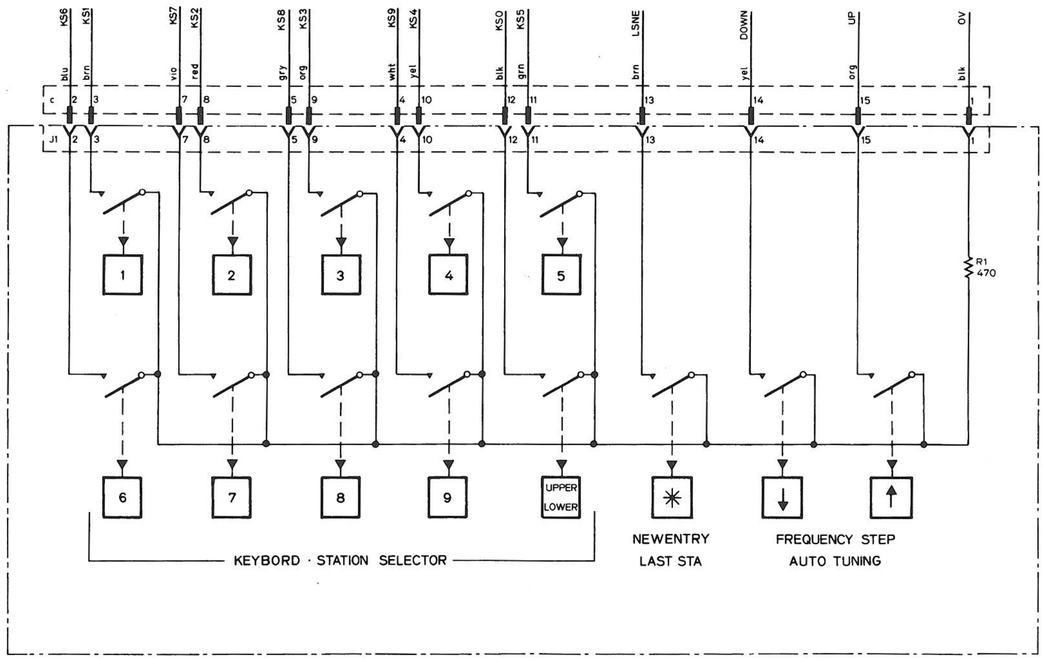


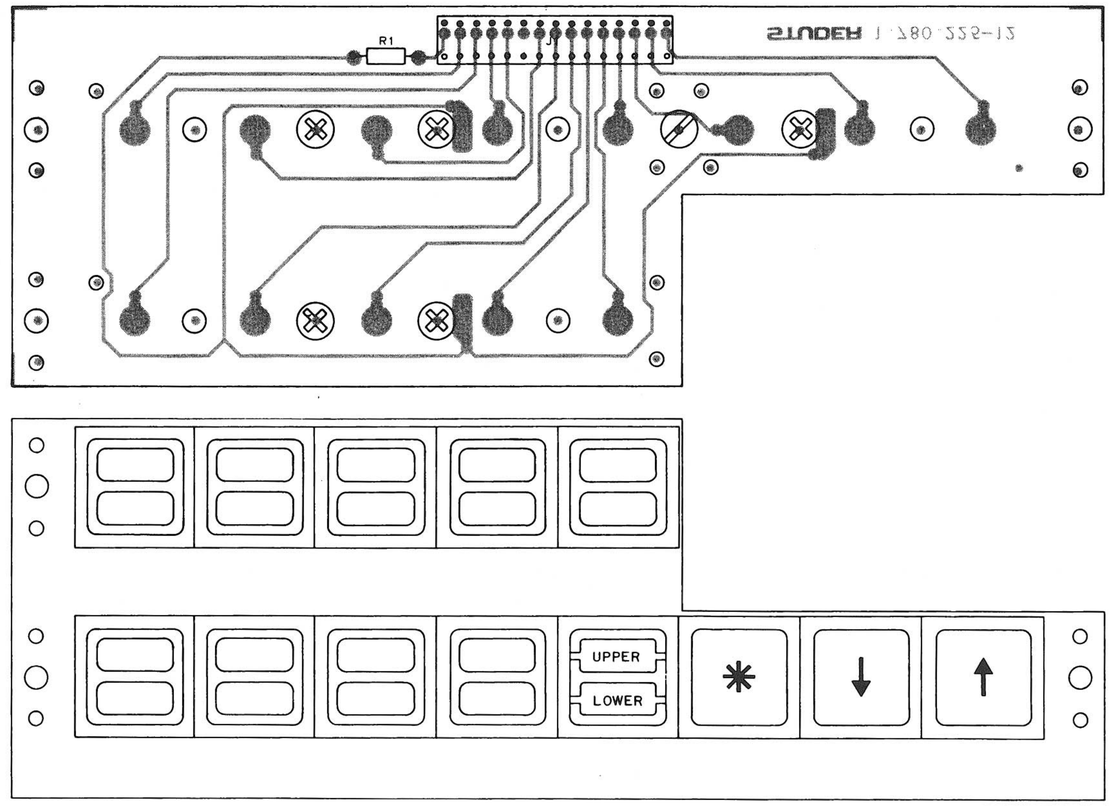


1.780.225

| | | |
|---|---|---|
| J1: | 54.01.0219 | 15 POLE |
| R1: | 57.11.4471 | 470 5% |

## PUSH BUTTON BOARD / FM MODE 1.780.220

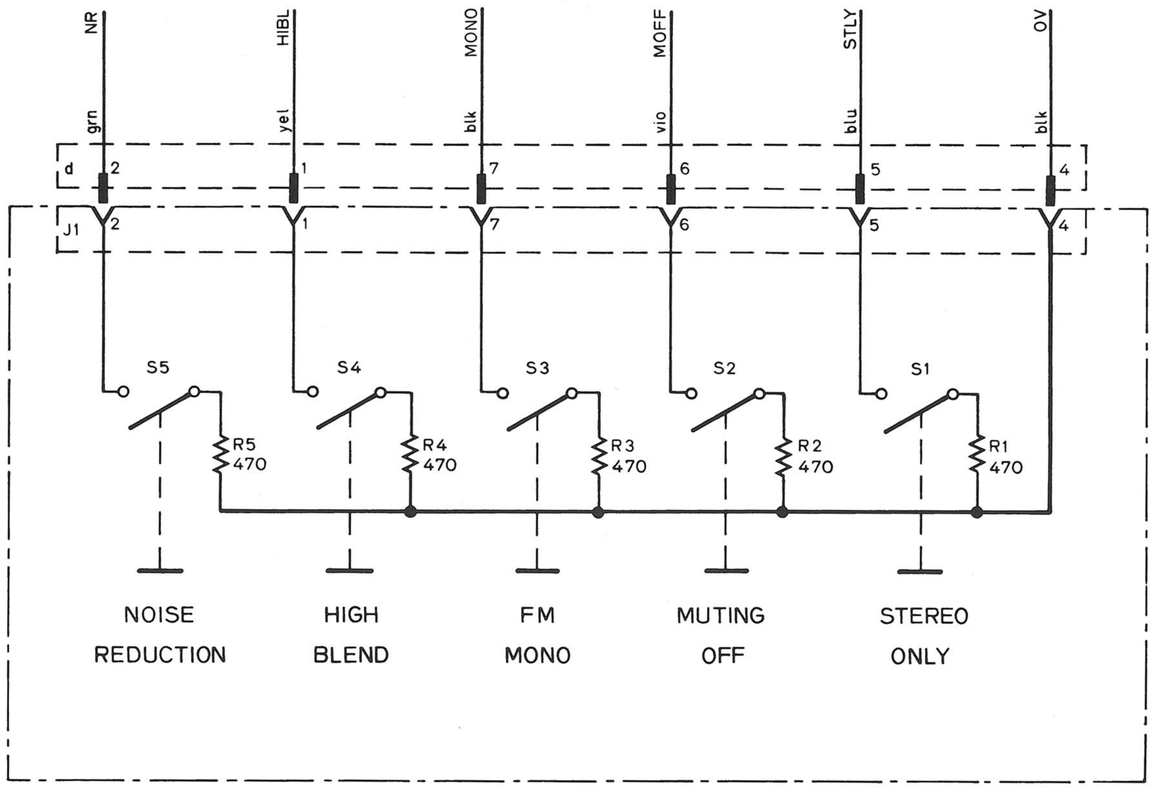


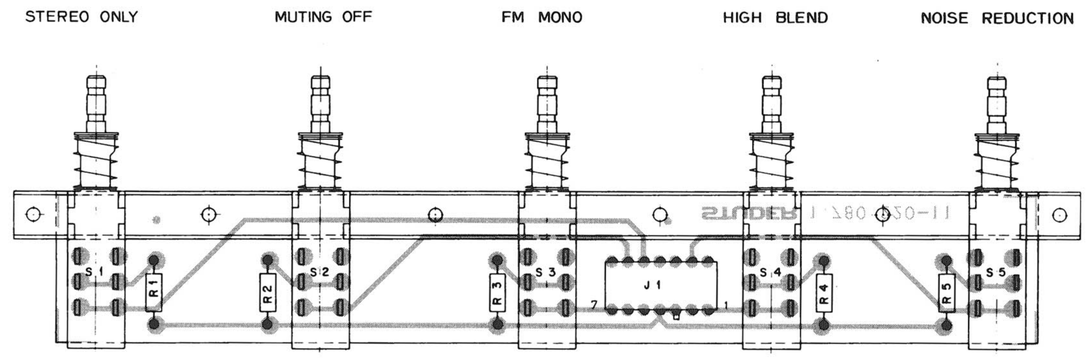


1.780.220

| | | |
|---|---|---|
| J1: | 54.01.0244 | 7 POLE |
| R1...5: | 57.11.4471 | 470 5% |
| S1...5: | 1.780.220-01 | PUSHBUTTON |

**PUSH BUTTON BOARD / OUTPUT SELECTION 1.780.240**

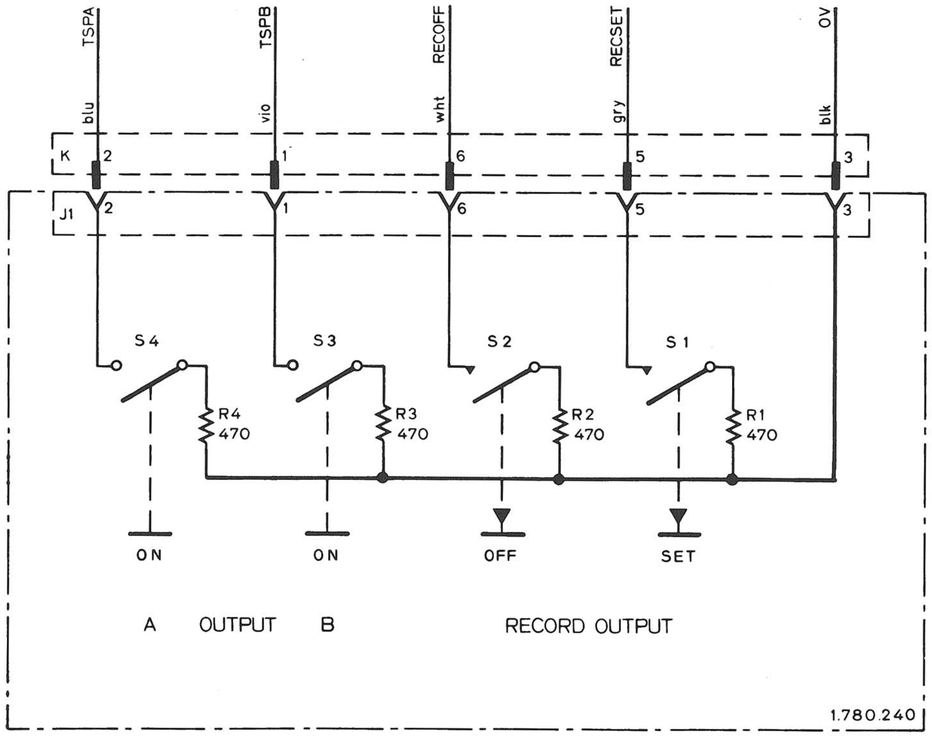


**INPUT SELECTION KEYBOARD 1.780.230**

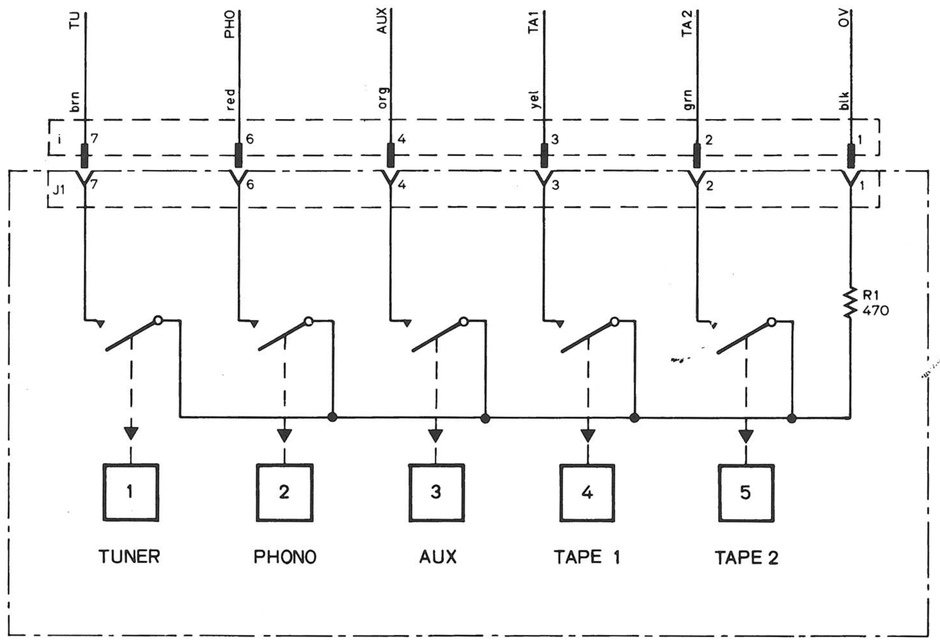


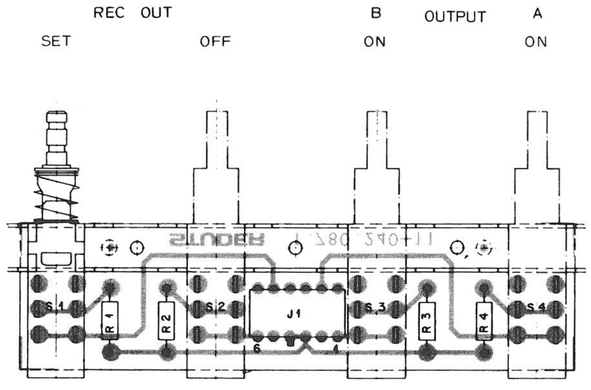


| IND | POS NO | PART NO | VALUE | SPECIFICATIONS/EQUIVALENT | MFR |
|---|---|---|---|---|---|
| | J1 | 54.01.0214 | 6 POLE | CIS | |
| | R1 | 57.11.4471 | 470Ω | 5% | |
| | R2 | 57.11.4471 | 470Ω | 5% | |
| | R3 | 57.11.4471 | 470Ω | 5% | |
| | R4 | 57.11.4471 | 470Ω | 5% | |
| | S1...S4 | 1.780.240.01 | PUSH BUTTON SWITCH | | ST |

| IND | DATE | NAME |
|---|---|---|
| 4 | | ST: STUDER |
| 3 | | |
| 2 | | |
| 1 | | |
| 0 | 17.5.79 | |

STUDER | PUSHBUTTON B. /OUTP. SELECTION | 1.780.240 | PAGE 1 OF 1

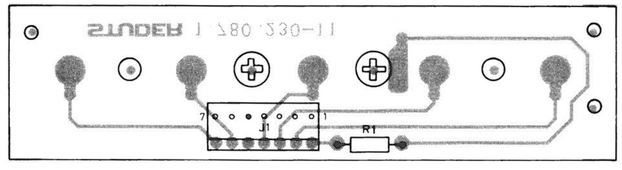


1.780.230

| | | |
|---|---|---|
| J1: | 54.01.0218 | 7 POLE |
| R1: | 57.11.4471 | 470 5% |

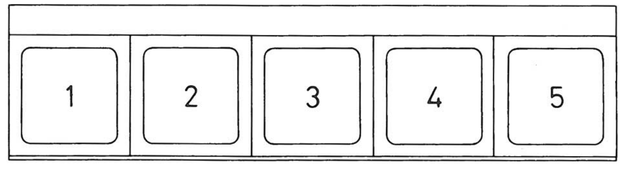

## MICROCOMPUTER PCB 1.780.260

| IND | POS NO | PART NO | VALUE | SPECIFICATIONS/EQUIVALENT | MFR |
|---|---|---|---|---|---|
| | C1 | 59.99.0205 | 68 nF | -20+80% 100V CER | |
| | C2-3 | 59.32.3103 | 10 nF | -20+100% 40V CER | |
| | C4 | 59.30.3330 | 33 µF | -20+50% 10V TA | |
| | C5 | 59.32.3103 | 10 nF | -20+100% 40V CER | |
| | C6 | 59.30.7220 | 22 µF | -20+50% 25V TA | |
| 1 | C8-9 | 59.32.3103 | 10 nF | -20+100% 40V CER | |
| | C10 | 59.30.6109 | 1 µF | -20+50% 35V TA | |
| | C11-15 | 59.32.3103 | 10 nF | -20+100% 40V CER | |
| 1 | C17-18 | 59.32.3103 | 10 nF | -20+100% 40V CER | |
| 1 | C20 | 59.32.3103 | 10 nF | -20+100% 40V CER | |
| | C21 | 59.99.0205 | 68 nF | -20+80% 100V CER | |
| | D1 | 50.04.0122 | 1N 4001 | SJ | |
| | D2-3 | 50.04.0125 | 1N 4448 | SJ | |
| | D4 | 50.04.1103 | Z 7.5V | ± 5% 0.4 W | |
| | D5 | 50.04.0125 | 1N 4448 | SJ | |
| | D6 | 50.04.1107 | Z 3.3V | ± 5% 0.4 W | |
| | D7-11 | 50.04.0125 | 1N 4448 | SJ | |
| | IC1 | 1.780.260.01 | | STUDER IC | |
| | IC2 | 50.06.0000 | 74 LS00 | | |
| | IC3 | 50.05.0127 | 7406 | TTL | |
| | IC4 | 50.06.0259 | 74 LS259 | | |
| | IC5 | 50.07.0014 | MC14584 | CMOS 40014 BPC | |
| | IC6-10 | 50.07.0512 | MC14512 | " 4512 BPC | |
| | J1 | 54.01.0307 | 10 poles | CIS | |
| | J2 | 54.01.0289 | 8 poles | " | |
| | J3 | 54.01.0309 | 13 poles | " | |
| | J4 | 54.01.0296 | 18 poles | " | |
| | J5 | 54.01.0297 | 19 poles | " | |
| | J6-7 | 54.01.0296 | 18 poles | " | |

| IND | DATE | NAME |
|---|---|---|
| 4 | | |
| 3 | | |
| 2 | 10.3.80 | Rom. |
| 1 | 19.12.79 | He |
| 0 | 29.8.79 | A. Dünner L2 |

STUDER MICROCOMPUTER 1.780.260.00 PAGE 1 OF 4

| IND | POS NO | PART NO | VALUE | SPECIFICATIONS/EQUIVALENT | MFR |
|---|---|---|---|---|---|
| | L1 | 62.01.0115 | 0.85 kΩ | ±20% Wide-band-inductor 80-220MHz | |
| | L2-L3 | 62.01.0126 | 15 µH | ±10% | |
| | Q1 | 50.03.0436 | BC 237B | npn BC 547B | |
| | Q2 | 50.03.0332 | BC 560B | pnp $P_{TOT}$ = 500 mW | |
| | Q3-4 | 50.03.0436 | BC 237B | npn BC 547B | |
| | Q5 | 50.03.0318 | BC 252B | pnp BC 308B | |
| | Q6 | 50.03.0350 | MPF 4392 | N-Fet J112F/-18 | |
| | Q7 | 50.03.0318 | BC 252B | pnp BC 308B | |
| | Q8 | 50.03.0436 | BC 237B | npn BC 547B | |
| | Q9-10 | 50.03.0318 | BC 252B | pnp BC 308B | |
| | Q11,Q13 | 50.03.0436 | BC 237B | npn BC 547B | |
| | Q12 | 50.03.0318 | BC 252B | pnp BC 308B | |
| | R1 | 57.11.4122 | 1.2 kΩ | ±5% 0.25W CSCH | |
| | R2 | 57.11.4472 | 4.7 kΩ | " " " | |
| | R3 | 57.11.4222 | 2.2 kΩ | " " " | |
| | R4-5 | 57.11.4332 | 3.3 kΩ | " " " | |
| | R6-7 | 57.11.4102 | 1 kΩ | " " " | |
| | R8 | 57.11.4122 | 1.2 kΩ | " " " | |
| | R9 | 57.11.4122 | 1.2 kΩ | " " " | |
| | R10-18 | 57.11.4332 | 3.3 kΩ | " " " | |
| | R19-22 | 57.11.4122 | 1.2 kΩ | " " " | |
| | R21 | 57.11.4472 | 4.7 kΩ | " " " | |
| | R22 | 57.11.4332 | 3.3 kΩ | " " " | |
| | R23-27 | 57.11.4103 | 10 kΩ | " " " | |
| | R28-29 | 57.11.4332 | 3.3 kΩ | " " " | |
| | R30 | 57.11.4222 | 2.2 kΩ | " " " | |
| | R31-32 | 57.11.4820 | 82 Ω | " " " | |
| | R33 | 57.11.4332 | 3.3 kΩ | " " " | |
| | R34-36 | 57.11.4104 | 100 kΩ | " " " | |
| | R37 | 57.11.4152 | 1.5 kΩ | " " " | |

| IND | DATE | NAME |
|---|---|---|
| 4 | | |
| 3 | | |
| 2 | 10.3.80 | Rom. |
| 1 | 19.12.79 | He |
| 0 | 29.8.79 | A. Dünner L2 |

STUDER MICROCOMPUTER 1.780.260.00 PAGE 2 OF 4

| IND | POS NO | PART NO | VALUE | SPECIFICATIONS/EQUIVALENT | MFR |
|---|---|---|---|---|---|
| | R38 | 57.11.4103 | 10 kΩ | ± 5% 0.25W CSCH | |
| | R39 | 57.11.4101 | 100 Ω | " " " | |
| | R40 | 57.11.4221 | 220 Ω | " " " | |
| | R41 | 57.11.4103 | 10 kΩ | " " " | |
| | R42 | 57.11.4122 | 1.2 kΩ | " " " | |
| | R43 | 57.11.4221 | 220 Ω | " " " | |
| | R44 | 57.11.4103 | 10 kΩ | " " " | |
| | R45 | 57.11.4101 | 100 Ω | " " " | |
| | R46 | 57.11.4223 | 22 kΩ | " " " | |
| | R47 | 57.11.4472 | 4.7kΩ | " " " | |
| | R48 | 57.11.4104 | 100 kΩ | " " " | |
| | R49 | 57.11.4103 | 10 kΩ | " " " | |
| | R50 | 57.11.4104 | 100 kΩ | " " " | |
| | R51 | 57.11.4103 | 10 kΩ | " " " | |
| | R52 | 57.11.4222 | 2.2 kΩ | " " " | |
| | R53 | 57.11.4332 | 3.3 kΩ | " " " | |
| | R54 | 57.11.4472 | 4.7 kΩ | " " " | |
| | R55 | 57.11.4102 | 1 kΩ | " " " | |
| | R56 | 57.11.4332 | 3.3 kΩ | " " " | |
| | R57-60 | 57.11.4152 | 1.5 kΩ | " " " | |
| | R61 | 57.11.4222 | 2.2 kΩ | " " " | |
| | R62 | 57.11.4184 | 180 kΩ | " " " | |
| | R63-64 | 57.11.4223 | 22 kΩ | " " " | |
| | R65 | 57.11.4273 | 27 kΩ | " " " | |
| | R66-70 | 57.11.4104 | 100 kΩ | " " " | |
| 2 | R71-72 | 57.11.4273 | 27 kΩ | " " " | |
| | R73 | 57.11.4104 | 100 kΩ | " " " | |
| | R74 | 57.11.4333 | 33 kΩ | " " " | |
| | R75-108 | 57.11.4332 | 3.3 kΩ | " " " | |
| 1 | R109 | 57.11.4223 | 22 kΩ | " " " | |

| IND | DATE | NAME |
|---|---|---|
| 4 | | |
| 3 | | |
| 2 | 10.3.80 | Rom. |
| 1 | 19.12.79 | He |
| 0 | 29.8.79 | A. Dünner L2 |

STUDER MICROCOMPUTER .780.260.00 PAGE 3 OF 4

| IND | POS NO | PART NO | VALUE | SPECIFICATIONS/EQUIVALENT | MFR |
|---|---|---|---|---|---|
| | Y1 | 89.01.0550 | 4 MHz | $C_L$ = 30 pF. | |
| | Z1-5 | 1.010.014.57 | 10 kΩ | 8 x 10 kΩ resistor network | |

| IND | DATE | NAME |
|---|---|---|
| 4 | | |
| 3 | | |
| 2 | 10.3.80 | Rom. |
| 1 | 19.12.79 | He |
| 0 | 29.8.79 | A. Dünner L2 |

STUDER MICROCOMPUTER 1.780.260.00 PAGE 4 OF 4

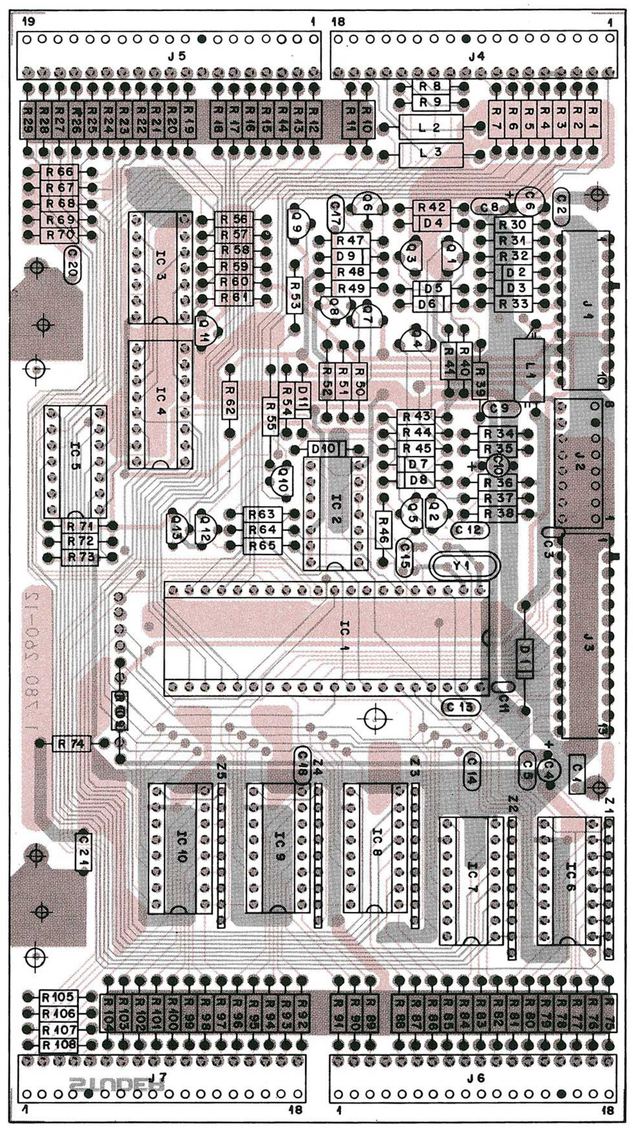

## MICROCOMPUTER PCB 1.780.260

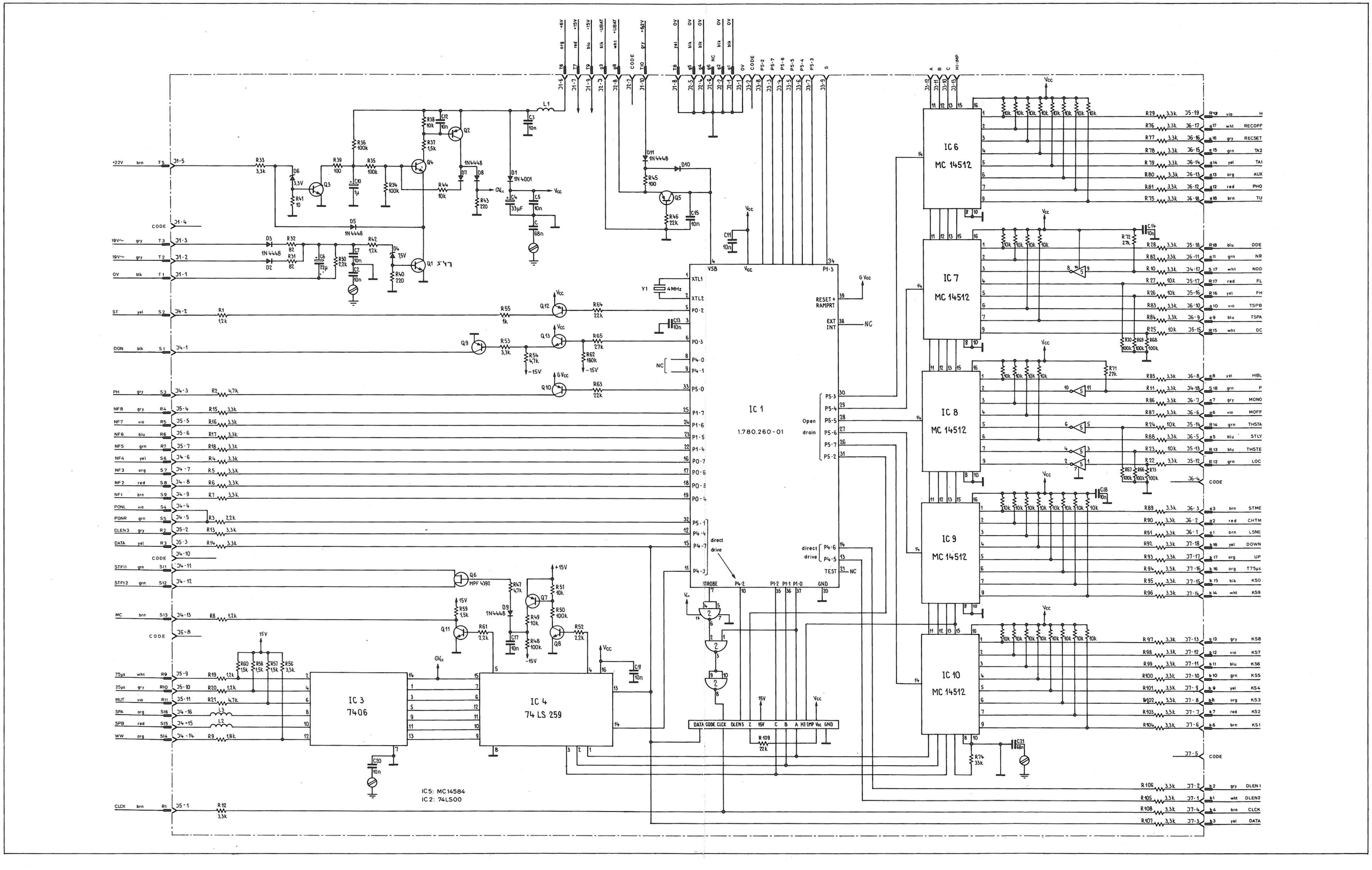

## FREQUENCY SYNTHESIZER PCB 1.780.151–81

| IND | POS NO | PART NO | VALUE | SPECIFICATIONS/EQUIVALENT | MFR |
|---|---|---|---|---|---|
| | C1 | 59.25.3221 | 220µF | -10% 16V EL | |
| | C2 | 59.32.4102 | 1nF | 20% 40V CER | |
| | C3 | 59.34.2390 | 39pF | 5% 40V N150 CER | |
| | C4 | 59.34.0399 | 3,9pF | 0,5pF 40V P100 CER | |
| | C5 | 59.32.4102 | 1nF | 20% 40V CER | |
| | C6 | 59.32.4102 | 1nF | 20% 40V CER | |
| | C7 | 59.32.3103 | 10nF | 80% 40V CER | |
| | C8 | 59.32.4102 | 1nF | 20% 40V CER | |
| 2 | C9 | 59.34.1829 | 8,2pF | 5% 40V NPO CER | |
| | C10 | 59.32.4102 | 1nF | 20% 40V CER | |
| | C11 | 59.32.4102 | 1nF | 20% 40V CER | |
| | C12 | 59.32.4102 | 1nF | 20% 40V CER | |
| | C13 | 59.32.4102 | 1nF | 20% 40V CER | |
| | C14 | 59.30.6109 | 1µF | 20% 35V TA | |
| | C15 | 59.18.0015 | 1.... 6pF | TRI CER | ST |
| | C16 | 59.32.3103 | 10nF | 80% 40V CER | |
| | C17 | 59.34.0229 | 2,2pF | 0,5pF 40V P100 CER | |
| 2 | C18 | 59.34.1180 | 18pF | 5% 40V N150 CER | |
| | C19 | 59.34.2141 | 140pF | 5% 40V N150 CER | |
| | C20 | 59.31.6104 | 0,1µF | 10% 100V MPE | |
| | C21 | 59.34.4680 | 680pF | 5% 40V N750 CER | |
| | C22 | 59.34.2220 | 22pF | 5% 40V N150 CER | |
| | C23 | 59.18.0108 | 5,5.... 40pF | TRI FOIL | PH |
| | C24 | 59.34.4151 | 150pF | 5% 40V N750 CER | |
| | C25 | 59.34.4151 | 150pF | 5% 40V N750 CER | |
| | C26 | 59.34.4151 | 150pF | 5% 40V N750 CER | |
| | C27 | 59.32.4102 | 1nF | 20% 40V CER | |
| | C28 | 59.32.4102 | 1nF | 20% 40V CER | |
| | C29 | 59.32.3103 | 10nF | 80% 40V CER | |
| | C30 | 59.32.3103 | 10nF | 80% 40V CER | |

| IND | DATE | NAME | |
|---|---|---|---|
| ④ | | | CER: CERAMIC — PH: PHILIPS |
| ③ | 22.9.81 | Rom. | MPE: MET. POLYESTER — ST: STETTNER |
| ② | 22.7.81 | Rom. | TRI: TRIMMER |
| ① | 30.5.80 | Rom. | EL: ELECTROLYTIC |
| ○ | 27.11.79 | Ra | TA: TANTALUM |

STUDER SYNTHESIZER 1.780.151.81 PAGE 1 OF 5

| IND | POS NO | PART NO | VALUE | SPECIFICATIONS/EQUIVALENT | MFR |
|---|---|---|---|---|---|
| | C31 | 59.32.3103 | 10nF | 80% 40V CER | |
| | C32 | 59.32.4102 | 1nF | 20% 40V CER | |
| | C33 | 59.34.4151 | 150pF | 5% 40V N750 CER | |
| | C34 | 59.32.2222 | 2,2nF | 10% 40V CER | |
| | C35 | 59.32.3103 | 10nF | 80% 40V CER | |
| | C36 | 59.32.3103 | 10nF | 80% 40V CER | |
| | C37 | 59.31.6223 | 22nF | 10% 100V MPE | |
| | C38 | 59.31.6224 | 0,22µF | 10% 100V MPE | |
| | C39 | 59.31.6105 | 1µF | 10% 100V MPE | |
| | C40 | 59.32.3103 | 10nF | 80% 40V CER | |
| | C41 | 59.32.3103 | 10nF | 80% 40V CER | |
| | C42 | 59.30.6478 | 0,47µF | 20% 35V TA | |
| | C43 | 59.30.3479 | 4,7µF | 20% 35V TA | |
| | C44 | 59.32.3103 | 10nF | 80% 40V CER | |
| | | | | | |
| | | | | | |
| | | | | | |
| | D1 | 50.04.0126 | BB204B | TUNING DIODE | S |
| | D2 | 50.04.0122 | 1N4001 | 50V 1A | |
| | | | | | |
| | IC1 | 50.05.0266 | µA78L05AC | VOLT. REG. | F |
| | IC2 | 50.13.0101 | SAA1053 | SYNTH. MODUL CMOS | P |
| 2 | IC3 | 50.13.0104 | SAA1059 | TWO MODULUS PRESCALER ECL | P |
| | IC4 | 50.09.0103 | LF356B | FET OP AMP | NS |
| | | | | | |
| | J1 | 54.01.0217 | 9 POLE | CLS | |
| | | | | | |
| | L1 | 1.166.112 | DIC TRAFO | | ST |
| | L2 | 62.01.0126 | 15µH | 10% | |
| | L3 | 1.166.110.01 | DIC COIL | | ST |

| IND | DATE | NAME | |
|---|---|---|---|
| ④ | | | CER: CERAMIC — S: SIEMENS |
| ③ | 22.9.81 | Rom. | MPE: MET. POLYESTER — F: FANCHILD |
| ② | 22.7.81 | Rom. | TA: TANTALUM — P: PHILIPS |
| ① | 30.5.80 | Rom. | ST: STUDER |
| ○ | 27.11.79 | Ra | NS: NATIONAL SEM. |

STUDER SYNTHESIZER 1.780.151.81 PAGE 2 OF 5

| IND | POS NO | PART NO | VALUE | SPECIFICATIONS/EQUIVALENT | MFR |
|---|---|---|---|---|---|
| | L4 | 62.02.4101 | 100µH | 10% | |
| | L5 | 62.02.4101 | 100µH | 10% | |
| | L6 | 62.02.4101 | 100µH | 10% | |
| | L7 | 62.02.4101 | 100µH | 10% | |
| | | | | | |
| | P1...P4 | 54.02.0320 | 2,8x0,8 | | |
| | | | | | |
| 1 | Q1 | 50.03.0516 | BF356 | NPN SI | P |
| | Q2 | 50.03.0311 | 1N5953 | DUAL GATE MOS FET | RCA |
| | Q3 | 50.03.0489 | MPS3640 | PNP SI | M |
| | Q4 | 50.03.0508 | MPS2369 | NPN SI | M |
| | Q5 | 50.03.0318 | BC178B | PNP SI | |
| | Q6 | 50.03.0318 | BC178B | PNP SI | |
| | | | | | |
| | R1 | 57.11.4102 | 1kΩ | 5% | |
| | R2 | 57.11.4102 | 1kΩ | 5% | |
| | R3 | 57.11.4153 | 15kΩ | 5% | |
| | R4 | 57.11.4822 | 8,2kΩ | 5% | |
| | R5 | 57.11.4271 | 270Ω | 5% | |
| | R6 | 57.11.4220 | 22Ω | 5% | |
| | R7 | 57.11.4154 | 150kΩ | 5% | |
| | R8 | 57.11.4473 | 47kΩ | 5% | |
| | R9 | 57.11.4154 | 150kΩ | 5% | |
| | R10 | 57.11.4224 | 220kΩ | 5% | |
| | R11 | 57.11.4221 | 220 | 5% | |
| | R12 | 57.11.4153 | 15kΩ | 5% | |
| | R13 | 57.02.5220 | 22Ω | 10% | |
| | R14 | 57.39.4221 | 4,22kΩ | 1% | |
| | R15 | 57.39.5231 | 5,23kΩ | 1% | |
| | R16 | 57.11.4472 | 4,7kΩ | 5% | |

| IND | DATE | NAME | |
|---|---|---|---|
| ④ | | | P: PHILIPS |
| ③ | 22.9.81 | | RCA: RADIO CORP AM |
| ② | 22.7.81 | Rom. | M: MOTOROLA |
| ① | 30.5.80 | Rom. | |
| ○ | 27.11.79 | Ra | |

STUDER SYNTHESIZER 1.780.151.81 PAGE 3 OF 5

| IND | POS NO | PART NO | VALUE | SPECIFICATIONS/EQUIVALENT | MFR |
|---|---|---|---|---|---|
| | R17 | 57.02.4106 | 10MΩ | 5% | |
| | R18 | 57.11.4102 | 1kΩ | 5% | |
| | R19 | 57.11.4332 | 3,3kΩ | 5% | |
| | R20 | 57.11.4332 | 3,3kΩ | 5% | |
| | R21 | 57.11.4101 | 100Ω | 5% | |
| | R22 | 57.11.4123 | 12kΩ | 5% | |
| | R23 | 57.11.4103 | 10kΩ | 5% | |
| | R24 | 57.11.4472 | 4,7kΩ | 5% | |
| | R25 | 57.11.4102 | 1kΩ | 5% | |
| | R26 | 57.11.4123 | 12kΩ | 5% | |
| | R27 | 57.11.4103 | 10kΩ | 5% | |
| | R28 | 57.11.4101 | 100Ω | 5% | |
| | R29 | 57.11.4189 | 1,8Ω | 5% | |
| | R30 | 57.11.4822 | 8,2kΩ | 5% | |
| | R31 | 57.11.4822 | 8,2kΩ | 5% | |
| | R32 | 57.11.4472 | 4,7kΩ | 5% | |
| | R33 | 57.11.4472 | 4,7kΩ | 5% | |
| | R34 | 57.11.4472 | 4,7kΩ | 5% | |
| | R35 | 57.11.4472 | 4,7kΩ | 5% | |
| | R36 | 57.11.4474 | 470kΩ | 5% | |
| | R37 | 57.11.4822 | 8,2kΩ | 5% | |
| | R38 | 57.11.4472 | 4,7kΩ | 5% | |
| | R39 | 57.11.4102 | 1kΩ | 5% | |
| | R40 | 57.11.4102 | 1kΩ | 5% | |
| | R41 | 57.11.4392 | 3,9kΩ | 5% | |
| | R42 | 57.11.4105 | 1MΩ | 5% | |
| | R43 | 57.11.4105 | 1MΩ | 5% | |
| | R44 | 57.11.4105 | 1MΩ | 5% | |
| 1 | R45 | 57.11.4102 | 1 kΩ | 5% | |
| | R46 | 57.11.4474 | 470kΩ | 5% | |

| IND | DATE | NAME | |
|---|---|---|---|
| ④ | | | |
| ③ | 22.9.81 | Rom. | |
| ② | 22.7.81 | Rom. | |
| ① | 30.5.80 | Rom. | |
| ○ | 27.11.79 | Ra | |

STUDER SYNTHESIZER 1.780.151.81 PAGE 4 OF 5

| IND | POS NO | PART NO | VALUE | SPECIFICATIONS/EQUIVALENT | MFR |
|---|---|---|---|---|---|
| | R47 | 57.11.4472 | 4,7kΩ | 5% | |
| | R48 | 57.11.4472 | 4,7kΩ | 5% | |
| | R49 | 57.11.4103 | 10kΩ | 5% | |
| | R50 | 57.11.4472 | 4,7kΩ | 5% | |
| | R51 | 57.11.4473 | 47kΩ | 5% | |
| | R52 | 57.11.4221 | 220 | 5% | |
| | | | | | |
| | | | | | |
| | | | | | |
| | | | | | |
| | | | | | |
| | | | | | |
| | Y1 | 89.01.0550 | 4MHz | ±50ppM 10°... 60° $R_1$<100Ω $C_1$=20pF | |
| | | | | | |
| | | | | | |
| | | | | | |
| | | | | | |
| | | | | | |
| | | | | | |
| | | | | | |
| | | | | | |
| | | | | | |
| | | | | | |
| | | | | | |
| | | | | | |
| | | | | | |
| | | | | | |

| IND | DATE | NAME | |
|---|---|---|---|
| ④ | | | |
| ③ | 22.9.81 | Rom. | |
| ② | 22.7.81 | Rom. | |
| ① | 30.5.80 | Rom. | |
| ○ | 27.11.79 | Ra | |

STUDER SYNTHESIZER 1.780.151.81 PAGE 5 OF 5

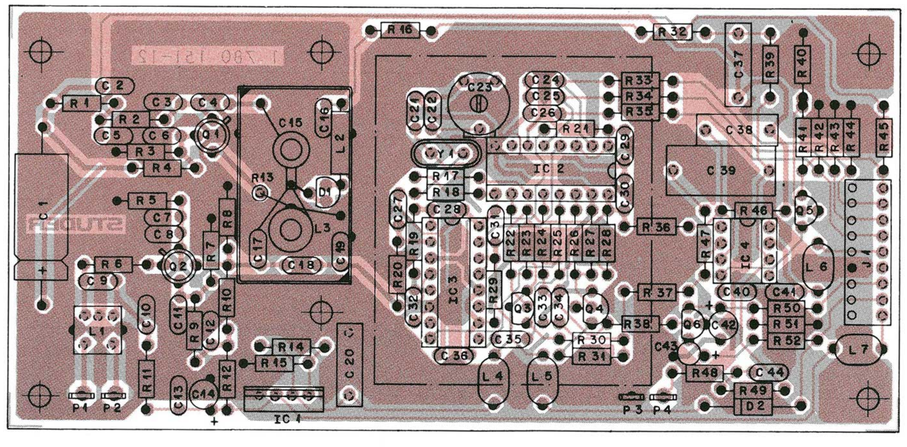

FREQUENCY SYNTHESIZER PCB 1.780.151–81

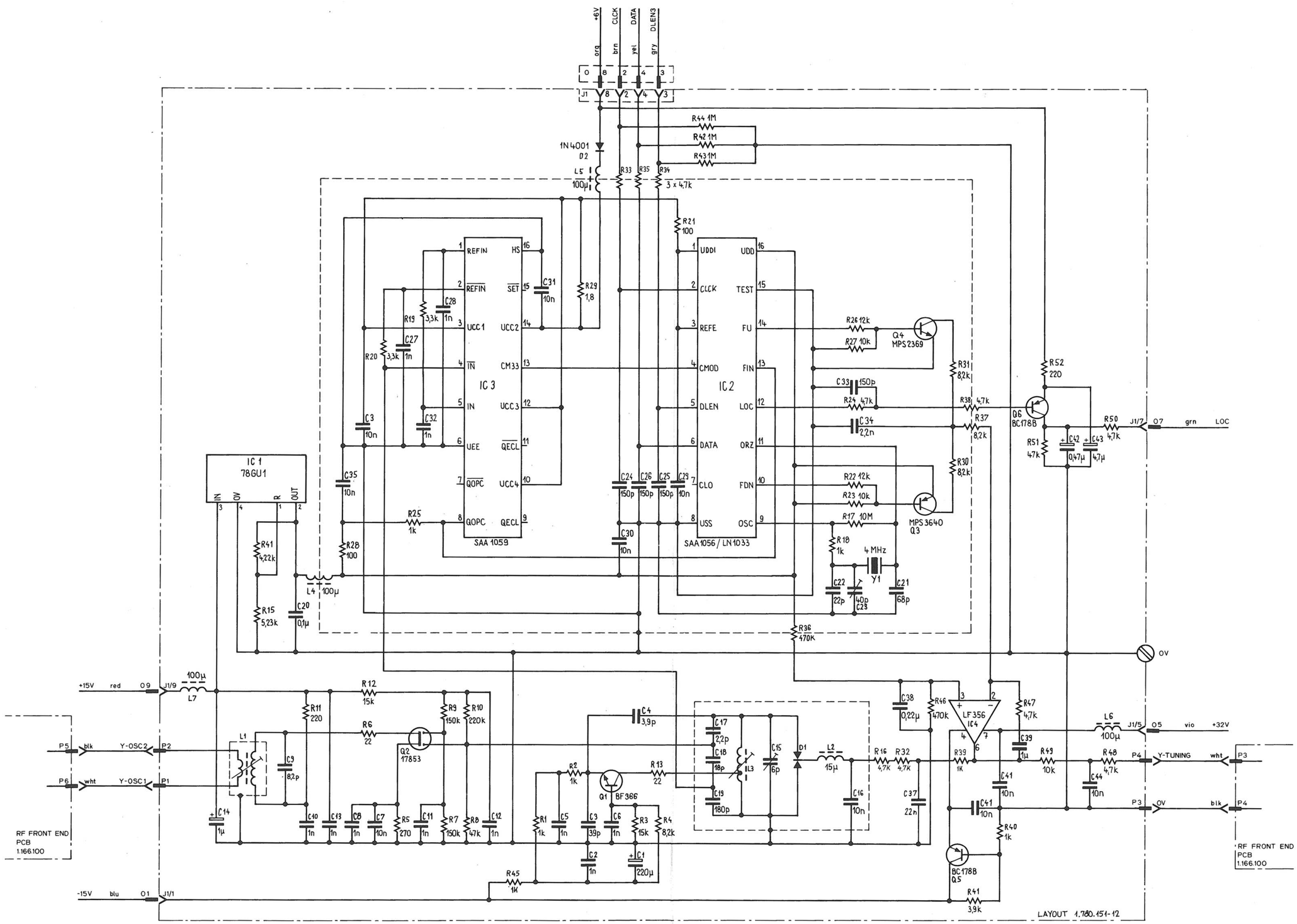

## FREQUENCY SYNTHESIZER PCB 1.780.151

| IND | POS NO | PART NO | VALUE | SPECIFICATIONS/EQUIVALENT | MFR |
|---|---|---|---|---|---|
| | C1 | 59.25.3221 | 220µF | -10% 16V EL | |
| | C2 | 59.32.4102 | 1nF | 20% 40V CER | |
| | C3 | 59.34.2390 | 39pF | 5% 40V N150 CER | |
| | C4 | 59.34.0399 | 3,9pF | 0,5pF 40V P100 CER | |
| | C5 | 59.32.4102 | 1nF | 20% 40V CER | |
| | C6 | 59.32.4102 | 1nF | 20% 40V CER | |
| | C7 | 59.32.3103 | 10nF | 80% 40V CER | |
| | C8 | 59.32.4102 | 1nF | 20% 40V CER | |
| | C9 | 59.34.1100 | 10pF | 5% 40V N150 CER | |
| | C10 | 59.32.4102 | 1nF | 20% 40V CER | |
| | C11 | 59.32.4102 | 1nF | 20% 40V CER | |
| | C12 | 59.32.4102 | 1nF | 20% 40V CER | |
| | C13 | 59.32.4102 | 1nF | 20% 40V CER | |
| | C14 | 59.30.6109 | 1µF | 20% 35V TA | |
| | C15 | 59.18.0015 | 1,...6pF | TRI CER | ST |
| | C16 | 59.32.3103 | 10nF | 80% 40V CER | |
| | C17 | 59.34.0229 | 2,2pF | 0,5pF 40V P100 CER | |
| 1 | C18 | 59.34.2220 | 22pF | 5% 40V N150 CER | |
| | C19 | 59.34.2141 | 140pF | 5% 40V N100 CER | |
| | C20 | 59.31.6104 | 0,1µF | 10% 100V MPE | |
| | C21 | 59.34.4680 | 68pF | 5% 40V N750 CER | |
| | C22 | 59.34.2220 | 22pF | 5% 40V N150 CER | |
| | C23 | 59.18.0108 | 5,5...40pF | TRI FOIL | PH |
| | C24 | 59.34.4151 | 150pF | 5% 40V N750 CER | |
| | C25 | 59.34.4151 | 150pF | 5% 40V N750 CER | |
| | C26 | 59.34.4151 | 150pF | 5% 40V N750 CER | |
| | C27 | 59.32.4102 | 1nF | 20% 40V CER | |
| | C28 | 59.32.4102 | 1nF | 20% 40V CER | |
| | C29 | 59.32.3103 | 10nF | 80% 40V CER | |
| | C30 | 59.32.3103 | 10nF | 80% 40V CER | |

| IND | DATE | NAME |
|---|---|---|
| 4 | | |
| 3 | | |
| 2 | | |
| 1 | 30.5.80 | Rom. |
| 0 | 27.11.79 | |

CER: CERAMIC
MPE: MET. POLYESTER
TRI: TRIMMER
EL: ELECTROLYTIC
TA: TANTALUM
PH: PHILIPS
ST: STETTNER

STUDER | FREQUENCY SYNTHESIZER | 1.780.151 | PAGE 1 OF 5

| IND | POS NO | PART NO | VALUE | SPECIFICATIONS/EQUIVALENT | MFR |
|---|---|---|---|---|---|
| | C31 | 59.32.3103 | 10nF | 80% 40V CER | |
| | C32 | 59.32.4102 | 1nF | 20% 40V CER | |
| | C33 | 59.34.4151 | 150pF | 5% 40V N750 CER | |
| | C34 | 59.32.2222 | 2,2nF | 10% 40V CER | |
| | C35 | 59.32.3103 | 10nF | 80% 40V CER | |
| | C36 | 59.32.3103 | 10nF | 80% 40V CER | |
| | C37 | 59.31.6223 | 22nF | 10% 100V MPE | |
| | C38 | 59.31.6224 | 0,22µF | 10% 100V MPE | |
| | C39 | 59.31.6105 | 1µF | 10% 100V MPE | |
| | C40 | 59.32.3103 | 10nF | 80% 40V CER | |
| | C41 | 59.32.3103 | 10nF | 80% 40V CER | |
| | C42 | 59.30.6478 | 0,47µF | 20% 35V TA | |
| | C43 | 59.30.3479 | 4,7µF | 20% 25V TA | |
| | C44 | 59.32.3103 | 10nF | 80% 40V CER | |
| | D1 | 50.04.0126 | BB204B | TUNING DIODE | S |
| | D2 | 50.04.0122 | 1N4001 | 50V 1A | |
| | IC1 | 50.05.0266 | µA7805UC | VOLT. REG. | F |
| | IC2 | 50.13.0101 | SAA1058 | SYNTH. MODUL CMOS | P |
| | IC3 | 50.13.0102 | SAA1057 | TWO MODULUS PRESCALER ECL | P |
| | IC4 | 50.09.0103 | LF356B | FET OP AMP | NS |
| | J1 | 54.01.0217 | 9 POLE | CIS | |
| | L1 | 1.166.112 | DIC. TRAFO | | ST |
| | L2 | 62.01.0126 | 15µH | 10% | |
| | L3 | 1.166.110.01 | DIC COIL | | ST |

| IND | DATE | NAME |
|---|---|---|
| 4 | | |
| 3 | | |
| 2 | | |
| 1 | 30.5.80 | Rom. |
| 0 | 27.11.79 | |

CER: CERAMIC
MPE: MET. POLYESTER
TA: TANTALUM
S: SIEMENS
F: FAIRCHILD
P: PHILIPS
ST: STUDER
NS: NATIONAL SEM.

STUDER | FREQUENCY SYNTHESIZER | 1.780.151 | PAGE 2 OF 5

| IND | POS NO | PART NO | VALUE | SPECIFICATIONS/EQUIVALENT | MFR |
|---|---|---|---|---|---|
| | L4 | 62.02.4101 | 100µH | 10% | |
| | L5 | 62.02.4101 | 100µH | 10% | |
| | L6 | 62.02.4101 | 100µH | 10% | |
| | L7 | 62.02.4101 | 100µH | 10% | |
| | P1...P4 | 54.02.0320 | 2,8x0,8 | | |
| 1 | Q1 | 50.03.0516 | BF366 | NPN SI | P |
| | Q2 | 50.03.0311 | 1784S3 | DUAL GATE MOS FET | RCA |
| | Q3 | 50.03.0489 | MPS3640 | PNP SI | M |
| | Q4 | 50.03.0508 | MPS2369 | NPN SI | M |
| | Q5 | 50.03.0318 | BC178B | PNP SI | |
| | Q6 | 50.03.0318 | BC178B | PNP SI | |
| | R1 | 57.11.4102 | 1kΩ | 5% | |
| | R2 | 57.11.4102 | 1kΩ | 5% | |
| | R3 | 57.11.4153 | 15kΩ | 5% | |
| | R4 | 57.11.4822 | 8,2kΩ | 5% | |
| | R5 | 57.11.4271 | 270Ω | 5% | |
| | R6 | 57.11.4220 | 22Ω | 5% | |
| | R7 | 57.11.4154 | 150kΩ | 5% | |
| | R8 | 57.11.4473 | 47kΩ | 5% | |
| | R9 | 57.11.4154 | 150kΩ | 5% | |
| | R10 | 57.11.4224 | 220kΩ | 5% | |
| | R11 | 57.11.4221 | 220 | 5% | |
| | R12 | 57.11.4153 | 15kΩ | 5% | |
| | R13 | 57.02.5220 | 22Ω | 10% | |
| | R14 | 57.39.4221 | 4,22kΩ | 1% | |
| | R15 | 57.39.5231 | 5,23kΩ | 1% | |
| | R16 | 57.11.4472 | 4,7kΩ | 5% | |

| IND | DATE | NAME |
|---|---|---|
| 4 | | |
| 3 | | |
| 2 | | |
| 1 | 30.5.80 | Rom. |
| 0 | 27.11.79 | |

P: PHILIPS
RCA: RADIO CORP. AM
M: MOTOROLA

STUDER | FREQUENCY SYNTHESIZER | 1.780.151 | PAGE 3 OF 5

| IND | POS NO | PART NO | VALUE | SPECIFICATIONS/EQUIVALENT | MFR |
|---|---|---|---|---|---|
| | R17 | 57.02.4106 | 10MΩ | 5% | |
| | R18 | 57.11.4102 | 1kΩ | 5% | |
| | R19 | 57.11.4332 | 3,3kΩ | 5% | |
| | R20 | 57.11.4332 | 3,3kΩ | 5% | |
| | R21 | 57.11.4101 | 100Ω | 5% | |
| | R22 | 57.11.4123 | 12kΩ | 5% | |
| | R23 | 57.11.4103 | 10kΩ | 5% | |
| | R24 | 57.11.4472 | 4,7kΩ | 5% | |
| | R25 | 57.11.4102 | 1kΩ | 5% | |
| | R26 | 57.11.4123 | 12kΩ | 5% | |
| | R27 | 57.11.4103 | 10kΩ | 5% | |
| | R28 | 57.11.4101 | 100Ω | 5% | |
| | R29 | 57.11.4189 | 1,8Ω | 5% | |
| | R30 | 57.11.4822 | 8,2kΩ | 5% | |
| | R31 | 57.11.4822 | 8,2kΩ | 5% | |
| | R32 | 57.11.4472 | 4,7kΩ | 5% | |
| | R33 | 57.11.4472 | 4,7kΩ | 5% | |
| | R34 | 57.11.4472 | 4,7kΩ | 5% | |
| | R35 | 57.11.4472 | 4,7kΩ | 5% | |
| | R36 | 57.11.4474 | 470kΩ | 5% | |
| | R37 | 57.11.4822 | 8,2kΩ | 5% | |
| | R38 | 57.11.4472 | 4,7kΩ | 5% | |
| | R39 | 57.11.4102 | 1kΩ | 5% | |
| | R40 | 57.11.4102 | 1kΩ | 5% | |
| | R41 | 57.11.4392 | 3,9kΩ | 5% | |
| | R42 | 57.11.4105 | 1MΩ | 5% | |
| | R43 | 57.11.4105 | 1MΩ | 5% | |
| | R44 | 57.11.4105 | 1MΩ | 5% | |
| 1 | R45 | 57.11.4102 | 1 kΩ | 5% | |
| | R46 | 57.11.4474 | 470kΩ | 5% | |

| IND | DATE | NAME |
|---|---|---|
| 4 | | |
| 3 | | |
| 2 | | |
| 1 | 30.5.80 | Rom. |
| 0 | 27.11.79 | |

STUDER | FREQUENCY SYNTHESIZER | 1.780.151 | PAGE 4 OF 5

| IND | POS NO | PART NO | VALUE | SPECIFICATIONS/EQUIVALENT | MFR |
|---|---|---|---|---|---|
| | R47 | 57.11.4472 | 4,7kΩ | 5% | |
| | R48 | 57.11.4472 | 4,7kΩ | 5% | |
| | R49 | 57.11.4103 | 10kΩ | 5% | |
| | R50 | 57.11.4472 | 4,7kΩ | 5% | |
| | R51 | 57.11.4473 | 47kΩ | 5% | |
| | R52 | 57.11.4221 | 220 | 5% | |
| | Y1 | 89.01.0550 | 4MHz | ±50ppM 10°...60° $R_1$<100Ω C=20pF | |

| IND | DATE | NAME |
|---|---|---|
| 4 | | |
| 3 | | |
| 2 | | |
| 1 | 30.5.80 | Rom. |
| 0 | 27.11.79 | |

STUDER | FREQUENCY SYNTHESIZER | 1.780.151 | PAGE 5 OF 5

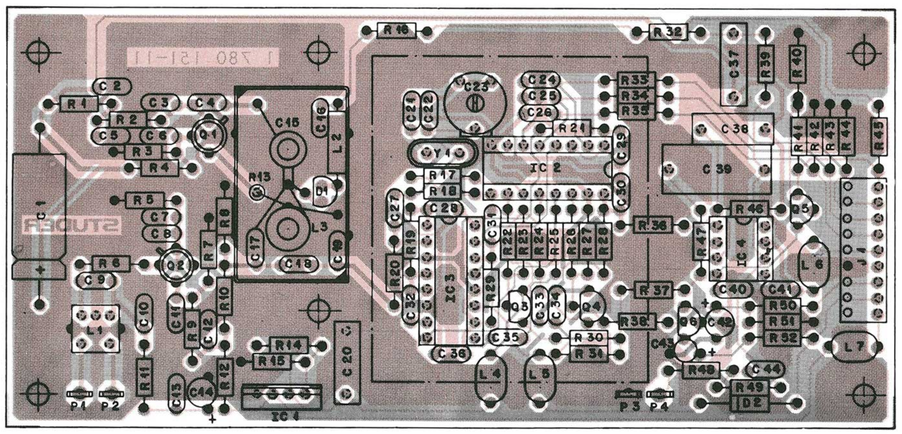

## FREQUENCY SYNTHESIZER PCB 1.780.151

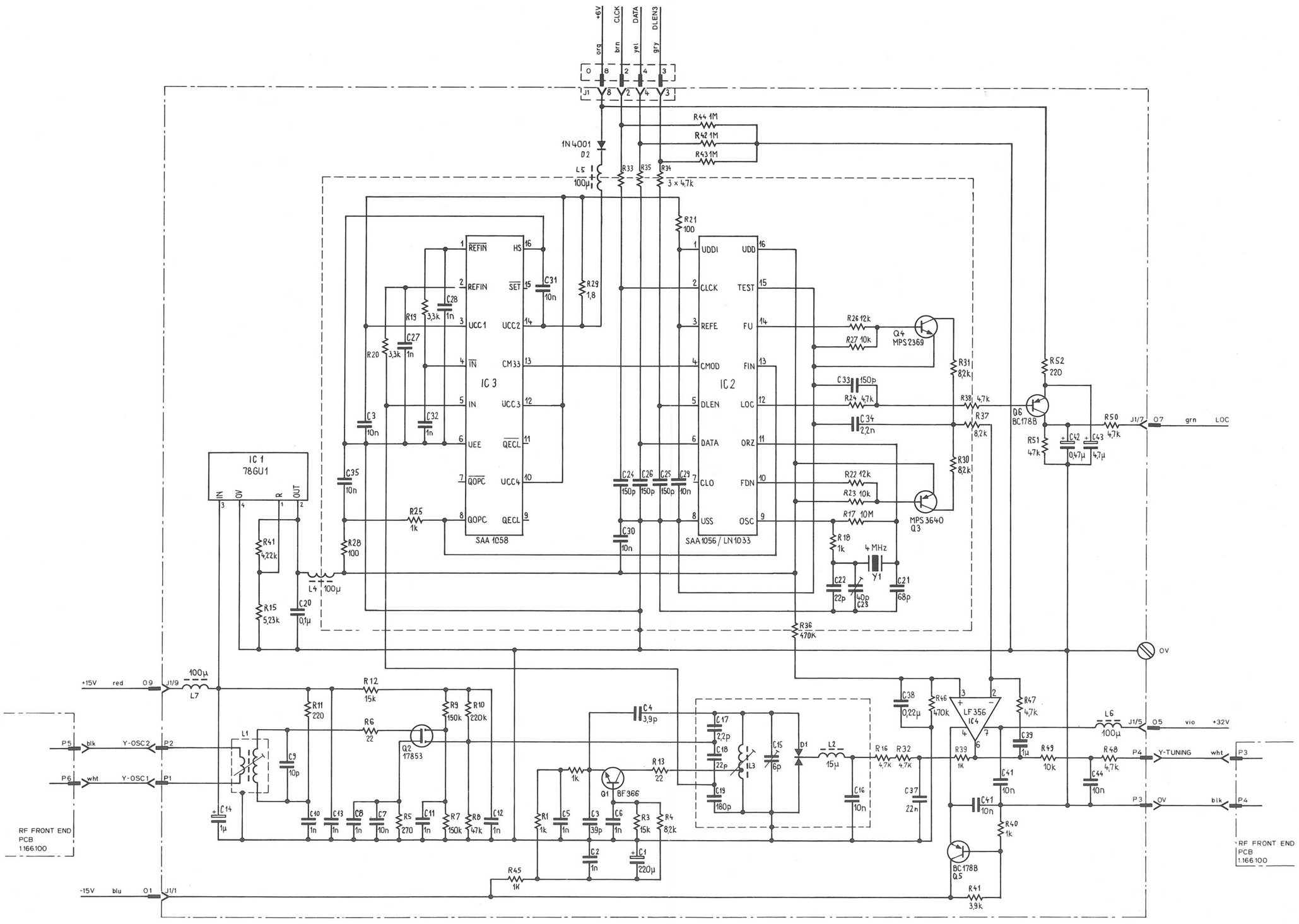

## METER CIRCUIT AND DEEMPHASIS PCB 1.780.155

| IND | POS NO | PART NO | VALUE | SPECIFICATIONS/EQUIVALENT | MFR |
|---|---|---|---|---|---|
| | C1 | 59.30.4479 | 4,7µF | -20% 16V TA | |
| | C2 | 59.11.4472 | 4700pF | 2,5% 160V PC | |
| | C3,C4 | 59.32.3103 | 10nF | 80% 40V CER | |
| | C5 | 59.34.1100 | 10pF | 5% 40V CER | |
| | C6 | 59.32.3103 | 10nF | 80% 40V CER | |
| | C7 | 59.30.6479 | 0,47µF | -20% 35V TA | |
| | C8 | 59.32.3103 | 10nF | 80% 40V CER | |
| | C9 | 59.11.6152 | 1500pF | 5% 160V PC | |
| | C10 | 59.30.6109 | 1µF | -20% 35V TA | |
| | C11 | 59.34.1689 | 6,8pF | 5% 40V CER | |
| | C12 | 59.34.4680 | 68pF | 5% 40V CER | |
| | C13 | 59.30.6109 | 1µF | -20% 35V TA | |
| | C14 | 59.32.3103 | 10nF | 80% 40V CER | |
| | C15 | 59.32.3103 | 10nF | 80% 40V CER | |
| | C16 | 59.32.3103 | 10nF | 80% 40V CER | |
| | C17 | 59.32.3103 | 10nF | 80% 40V CER | |
| | C18 | 59.22.4101 | 100µF | -10% 16V EL | |
| | C19 | 59.30.4339 | 3,3µF | -20% 16V TA | |
| | C20 | 59.30.4339 | 3,3µF | -20% 16V TA | |
| | C21 | 59.30.4479 | 4,7µF | -20% 16V TA | |
| | C22 | 59.11.4472 | 4700pF | 2,5% 160V PC | |
| | C23 | 59.30.6478 | 0.47µF | -20% 35V TA | |
| | C24 | 59.11.6152 | 1500pF | 5% 160V PC | |
| | C25 | 59.30.6109 | 1µF | -20% 35V TA | |
| | C26 | 59.34.1689 | 6,8pF | 5% 40V CER | |
| | C27 | 59.34.4680 | 68pF | 5% 40V CER | |
| | C28 | 59.30.6109 | 1µF | -20% 35V TA | |
| | C29 | 59.30.6109 | 1µF | -20% 35V TA | |
| | C30 | 59.31.6105 | 1µF | 10% 160V MPE | |
| | C31 | 59.31.6105 | 1µF | 10% 160V MPE | |

| IND | DATE | NAME | |
|---|---|---|---|
| 4 | | | TA = TANTALUM |
| 3 | | | PC = POLYCARBONATE |
| 2 | | | CER = CERAMIC |
| 1 | 10.3.80 | Rom | EL = ELECTROLYTIC |
| 0 | 15.4.79 | Ra | MPE = MET. POLYESTER |

STUDER METER CIRCUIT AND DEEMPHASIS 1.780.155 PAGE 1 OF 5

| IND | POS NO | PART NO | VALUE | SPECIFICATIONS/EQUIVALENT | MFR |
|---|---|---|---|---|---|
| | R5 | 57.39.5361 | 5,36k | 1% MF | |
| | R6 | 57.11.4153 | 15kΩ | 5% | |
| | R7 | 58.02.5473 | 47kΩ | 20% PCF | |
| | R8 | 57.11.4472 | 4,7kΩ | 5% | |
| | R9 | 57.11.4472 | 4,7kΩ | 5% | |
| | R10 | 57.11.4335 | 3,3MΩ | 5% | |
| | R11 | 57.11.4102 | 1kΩ | 5% | |
| | R12 | 57.11.4102 | 1kΩ | 5% | |
| | R13 | 57.39.1692 | 16,9kΩ | 1% MF | |
| | R14 | 57.39.3322 | 33,2kΩ | 1% MF | |
| | R15 | 57.11.4823 | 82kΩ | 5% | |
| | R16 | 57.11.4105 | 1MΩ | 5% | |
| | R17 | 57.11.4103 | 10kΩ | 5% | |
| | R18 | 57.39.6981 | 6,98kΩ | 1% MF | |
| | R19 | 57.11.4105 | 1MΩ | 5% | |
| | R20 | 57.11.4102 | 1kΩ | 5% | |
| | R21 | 57.11.4471 | 470Ω | 5% | |
| | R22 | 57.11.4103 | 10kΩ | 5% | |
| | R23 | 57.11.4152 | 1,5kΩ | 5% | |
| | R24 | 57.11.4393 | 39kΩ | 5% | |
| | R25 | 57.11.4472 | 4,7kΩ | 5% | |
| | R26 | 57.11.4153 | 15kΩ | 5% | |
| | R27 | 57.11.4102 | 1kΩ | 5% | |
| | R28 | 57.11.4472 | 4,7kΩ | 5% | |
| | R29 | 57.11.4223 | 22kΩ | 5% | |
| | R30 | 57.11.4335 | 3,3MΩ | 5% | |
| | R31 | 57.11.4223 | 22kΩ | 5% | |
| | R32 | 57.11.4221 | 220Ω | 5% | |
| 1 | R33 | 57.11.4123 | 12kΩ | 5% | |
| 1 | R34 | 57.11.4123 | 12kΩ | 5% | |

| IND | DATE | NAME | |
|---|---|---|---|
| 4 | | | MF: METAL FILM |
| 3 | | | PCF: POT'M. CARBON FILM |
| 2 | | | |
| 1 | 10.3.80 | Rom | |
| 0 | 15.4.79 | Ra | |

STUDER METER CIRCUIT AND DEEMPHASIS 1.780.155 PAGE 3 OF 5

| IND | POS NO | PART NO | VALUE | SPECIFICATIONS/EQUIVALENT | MFR |
|---|---|---|---|---|---|
| | R65 | 57.11.4682 | 6,8kΩ | 5% | |
| | R66 | 57.11.4222 | 2,2kΩ | 5% | |
| | R67 | 57.11.4682 | 6,8kΩ | 5% | |
| | R68 | 57.11.4222 | 2,2kΩ | 5% | |
| | R69 | 57.11.4334 | 330kΩ | 5% | |
| | R70 | 57.11.4103 | 10kΩ | 5% | |
| | R71 | 57.11.4473 | 47kΩ | 5% | |
| | R72 | 57.11.4223 | 22kΩ | 5% | |
| | R73 | 57.11.4105 | 1MΩ | 5% | |
| | R74 | 57.11.4153 | 15kΩ | 5% | |
| | R75 | 57.11.4102 | 1kΩ | 5% | |
| | R76 | 57.11.4153 | 15kΩ | 5% | |
| | R77 | 57.11.4102 | 1kΩ | 5% | |
| | R78 | 57.11.4152 | 1,5kΩ | 5% | |
| | R79 | 57.39.3091 | 3,09kΩ | 1% MF | |
| | R80 | 57.39.6191 | 6,19kΩ | 1% MF | |
| | R81 | 57.39.6810 | 681Ω | 1% MF | |
| | R82 | 57.39.6810 | 681Ω | 1% MF | |
| | R83 | 57.11.4103 | 10kΩ | 5% | |
| | R84 | 57.11.4123 | 12kΩ | 5% | |
| | R85 | 57.39.1622 | 16,2kΩ | 1% MF | |
| | R86 | 57.11.4103 | 10kΩ | 5% | |
| | R87 | 57.11.4123 | 12kΩ | 5% | |

| IND | DATE | NAME | |
|---|---|---|---|
| 4 | | | MF: METAL FILM |
| 3 | | | PCF: POT'M. CARBON FILM |
| 2 | | | |
| 1 | 10.3.80 | Rom | |
| 0 | 15.4.79 | Ra | |

STUDER METER CIRCUIT AND DEEMPHASIS 1.780.155 PAGE 5 OF 5

| IND | POS NO | PART NO | VALUE | SPECIFICATIONS/EQUIVALENT | MFR |
|---|---|---|---|---|---|
| | C32 | 59.34.4680 | 68pF | 5% 40V CER | |
| | C33 | 59.12.2223 | 22nF | 5% 100V MPE | |
| | C34 | 59.12.2563 | 56nF | 5% 100V MPE | |
| | C35 | 59.11.6332 | 3,3nF | 5% 400V PC | |
| | C36 | 59.32.3103 | 10nF | 80% 40V CER | |
| | C37 | 59.32.3103 | 10nF | 80% 40V CER | |
| | | | | | |
| | D1...D6 | 50.04.0125 | 1N4448 | FTV 0,1A | ANY |
| | | | | | |
| | IC1 | 50.05.0257 | LM301AP | OP. AMP. | NS/TI |
| | IC2 | 50.05.0257 | LM301AP | OP. AMP. | NS/TI |
| | IC3 | 50.05.0245 | RC4558P | DUAL OP. AMP. | TI |
| | IC4 | 50.05.0257 | LM301AP | OP. AMP. | NS/TI |
| | IC5 | 50.09.0103 | LF356 | FET OP. AMP. | NS |
| | IC6 | 50.05.0245 | RC4558P | DUAL OP. AMP | TI |
| | | | | | |
| | J1 | 54.01.0294 | 16 POLE | CLS | |
| | J2 | 54.01.0219 | 15POLE | CLS | |
| | | | | | |
| | L1 | 62.02.3223 | 22mH | 5% | |
| | | | | | |
| | Q1...Q5 | 50.03.0438 | BC108B | NPN SI | ANY |
| | Q6 | 50.03.0439 | BC109C | NPN SI | ANY |
| | Q7...Q8 | 50.03.0318 | BC178B | PNP SI | ANY |
| | Q9...Q11 | 50.03.0438 | BC108B | NPN SI | ANY |
| | | | | | |
| | R1 | 58.02.5473 | 47kΩ | PCF 20% | |
| | R2 | 57.11.4153 | 15kΩ | 5% | |
| | R3 | 57.11.4102 | 1kΩ | 5% | |
| | R4 | 57.39.2212 | 22,1kΩ | 1% MF | |

| IND | DATE | NAME | | |
|---|---|---|---|---|
| 4 | | | CER: CERAMIC | NS: NATIONAL SEM. |
| 3 | | | MPE: MET. POLYESTER | TI: TEXAS INSTR. |
| 2 | | | PC: POLYCARBONATE | |
| 1 | 10.3.80 | Rom | SI: SILICON | CF: CARBON FILM |
| 0 | 15.4.79 | Ra | PCF: POT'M. CARBON FILM | MF: METAL FILM |

STUDER METER CIRCUIT AND DEEMPHASIS 1.780.155 PAGE 2 OF 5

| IND | POS NO | PART NO | VALUE | SPECIFICATIONS/EQUIVALENT | MFR |
|---|---|---|---|---|---|
| 1 | R35 | 57.11.4123 | 12kΩ | 5% | |
| 1 | R36 | 57.11.4123 | 12kΩ | 5% | |
| | R37 | 57.39.1692 | 16,9kΩ | 1% MF | |
| | R38 | 57.39.3322 | 33,2kΩ | 1% MF | |
| | R39 | 58.02.5473 | 47kΩ | 20% PCF | |
| | R40 | 57.11.4153 | 15kΩ | 5% | |
| | R41 | 57.11.4102 | 1kΩ | 5% | |
| | R42 | 57.39.2212 | 22,1kΩ | 1% MF | |
| | R43 | 57.39.5361 | 5,36kΩ | 1% MF | |
| | R44 | 57.11.4153 | 15kΩ | 5% | |
| | R45 | 57.11.4823 | 82kΩ | 5% | |
| | R46 | 57.11.4105 | 1MΩ | 5% | |
| | R47 | 57.11.4103 | 10kΩ | 5% | |
| | R48 | 57.39.6981 | 6,98kΩ | 1% MF | |
| | R49 | 57.11.4105 | 1MΩ | 5% | |
| | R50 | 57.11.4102 | 1kΩ | 5% | |
| | R51 | 57.11.4105 | 1MΩ | 5% | |
| | R52 | 57.11.4105 | 1MΩ | 5% | |
| | R53 | 57.11.4105 | 1MΩ | 5% | |
| | R54 | 57.11.4333 | 33kΩ | 5% | |
| | R55 | 58.02.5473 | 47kΩ | 20% PCF | |
| | R56 | 57.11.4333 | 33kΩ | 5% | |
| | R57 | 58.02.5470 | 470Ω | 20% PCF | |
| | R58 | 57.39.1622 | 16,2kΩ | 1% MF | |
| | R59 | 57.11.4334 | 330kΩ | 5% | |
| | R60 | 57.11.4220 | 22Ω | 5% | |
| | R61 | 57.11.4472 | 4,7kΩ | 5% | |
| | R62 | 57.11.4472 | 4,7kΩ | 5% | |
| | R63 | 57.11.4222 | 2,2kΩ | 5% | |
| | R64 | 57.11.4222 | 2,2kΩ | 5% | |

| IND | DATE | NAME | |
|---|---|---|---|
| 4 | | | MF: METAL FILM |
| 3 | | | PCF: POT'M. CARBON FILM |
| 2 | | | |
| 1 | 10.3.80 | Rom | |
| 0 | 15.4.79 | Ra | |

STUDER METER CIRCUIT AND DEEMPHASIS 1.780.155 PAGE 4 OF 5

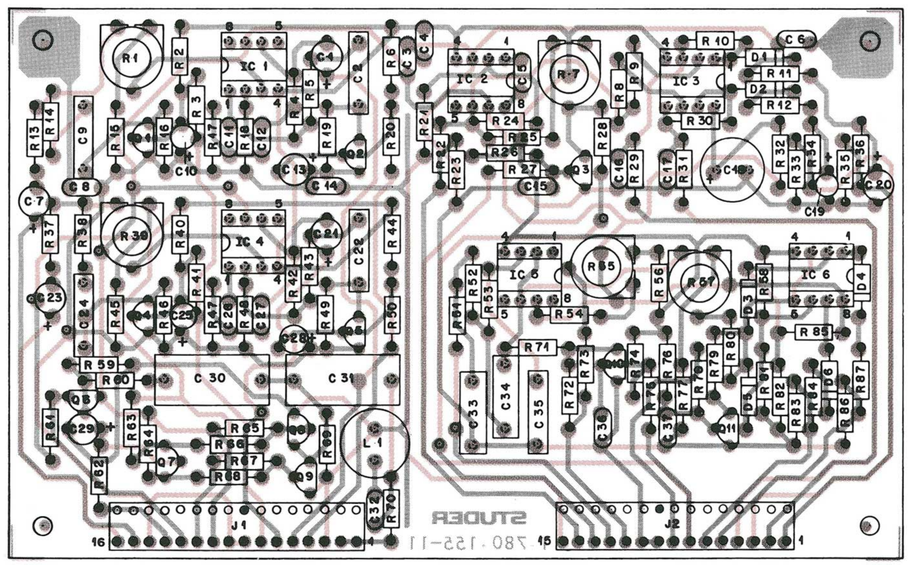

**METER CIRCUIT AND DEEMPHASIS PCB 1.780.155**

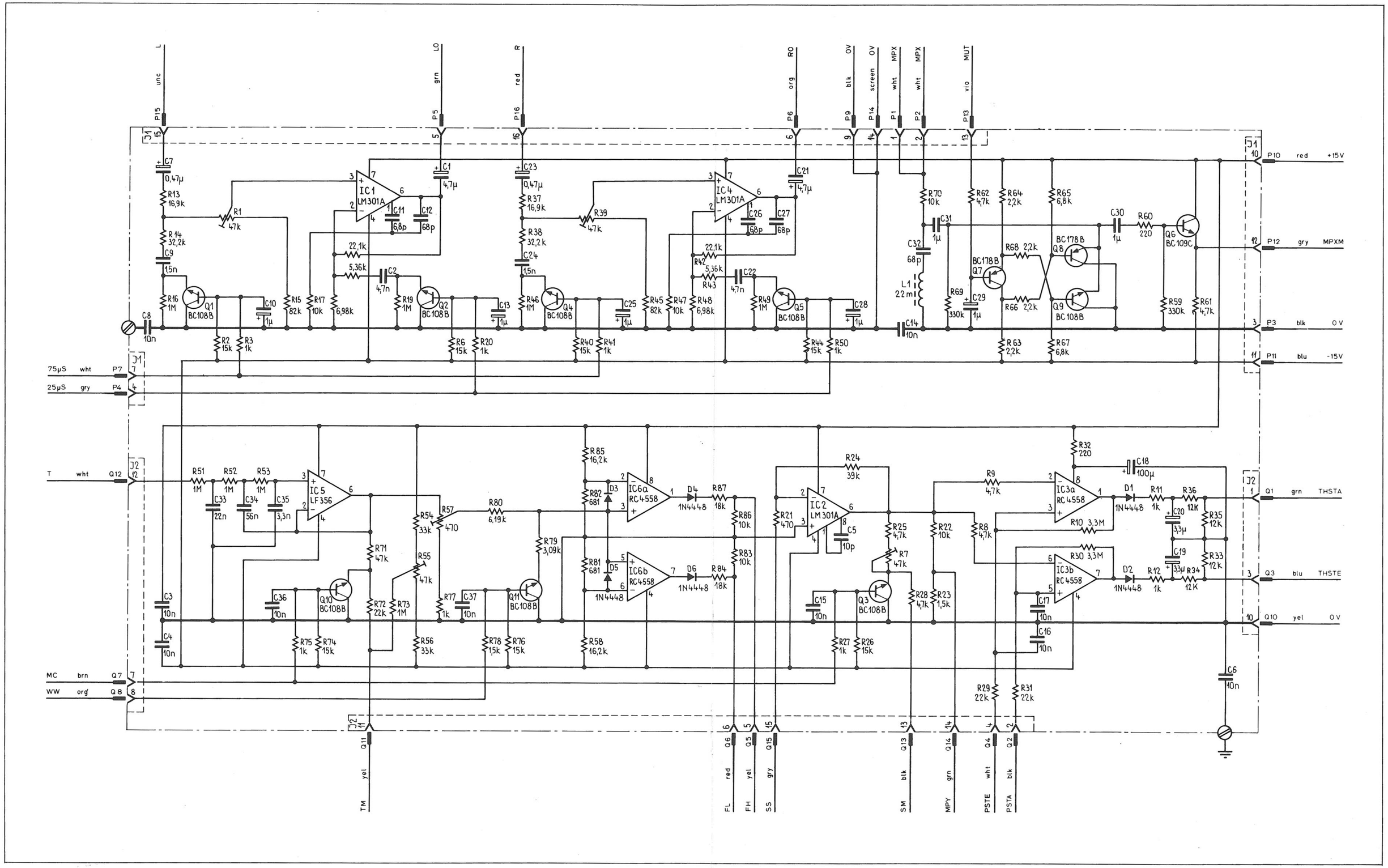

## DISPLAY PCB 1.780.245

| IND | POS NO | PART NO | VALUE | SPECIFICATIONS/EQUIVALENT | MFR |
|---|---|---|---|---|---|
| | C1...C5 | 59.32.3103 | 10nF | +80% 40V CER | |
| | C6 | 59.30.6109 | 1µF | 20% 35V TA | |
| | D1...D3 | 50.04.0122 | 1N4001 | 50V 1A | ANY |
| | D4...D6 | 50.04.0125 | 1N4148 | 75V 0.1A | ANY |
| | DL1...DL9 | 73.01.0122 | 5082-7731 | 7-SEGMENT LED DISPLAY | HP |
| | DL10 | 50.04.2115 | MV5752 | LED RED | M |
| | IC1...IC2 | 50.13.0103 | SAA1060 | LED INTERFACE CIRCUIT | P |
| | R1 | 57.11.4390 | 39Ω | 5% 0.25W CF | |
| | R2,R4 | 57.11.4222 | 2.2kΩ | " | |
| | R3,R5...R35 | 57.11.4331 | 330Ω | " | |
| | R36 | 57.11.4151 | 150Ω | " | |
| ② | R37,R38 | 57.11.4104 | 100kΩ | " | |
| | J1 | 54.01.0306 | 8-POLE | CLS | |
| | J2 | 54.01.0244 | 7-POLE | CLS | |
| | ME1 | 1.780.245.04 | | SIGNAL METER | ST |
| | Z1 | ———— | 15V-1W | Z321 | O |

| IND | DATE | NAME | | |
|---|---|---|---|---|
| ④ | | | CER = CERAMIC | HP = HEWLET PACKARD |
| ③ | | | CF = CARBON FILM | M = MONGUANTO |
| ② | 15.10.79 | Rom. | TA = Tantalum | P = PHILIPS |
| ① | 18.6.79 | He | | ST = STUDER |
| ○ | 15.5.79 | Ha | | O = DIRAM |

| STUDER | DISPLAY | 1.780.245 | PAGE 1 OF 1 |
|---|---|---|---|

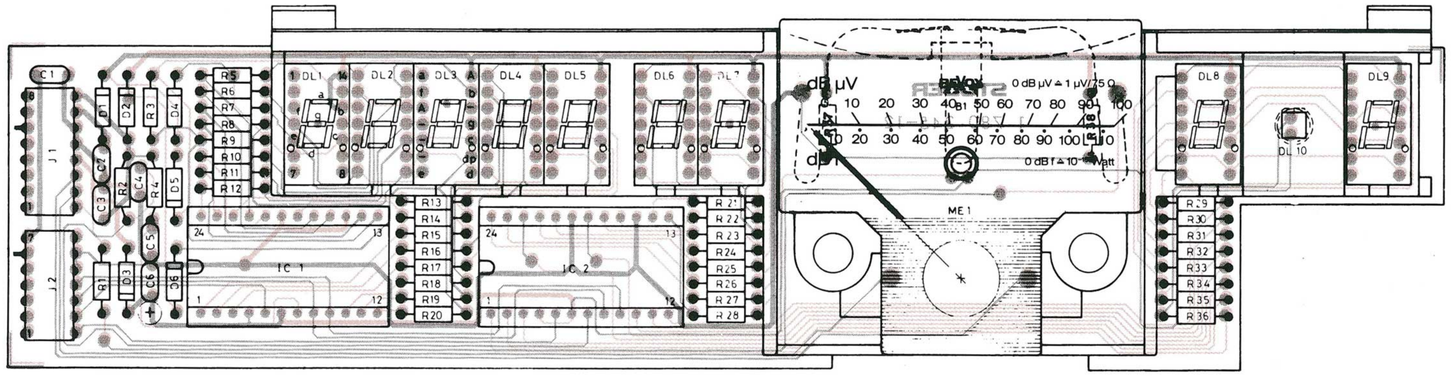

**DISPLAY PCB 1.780.245**

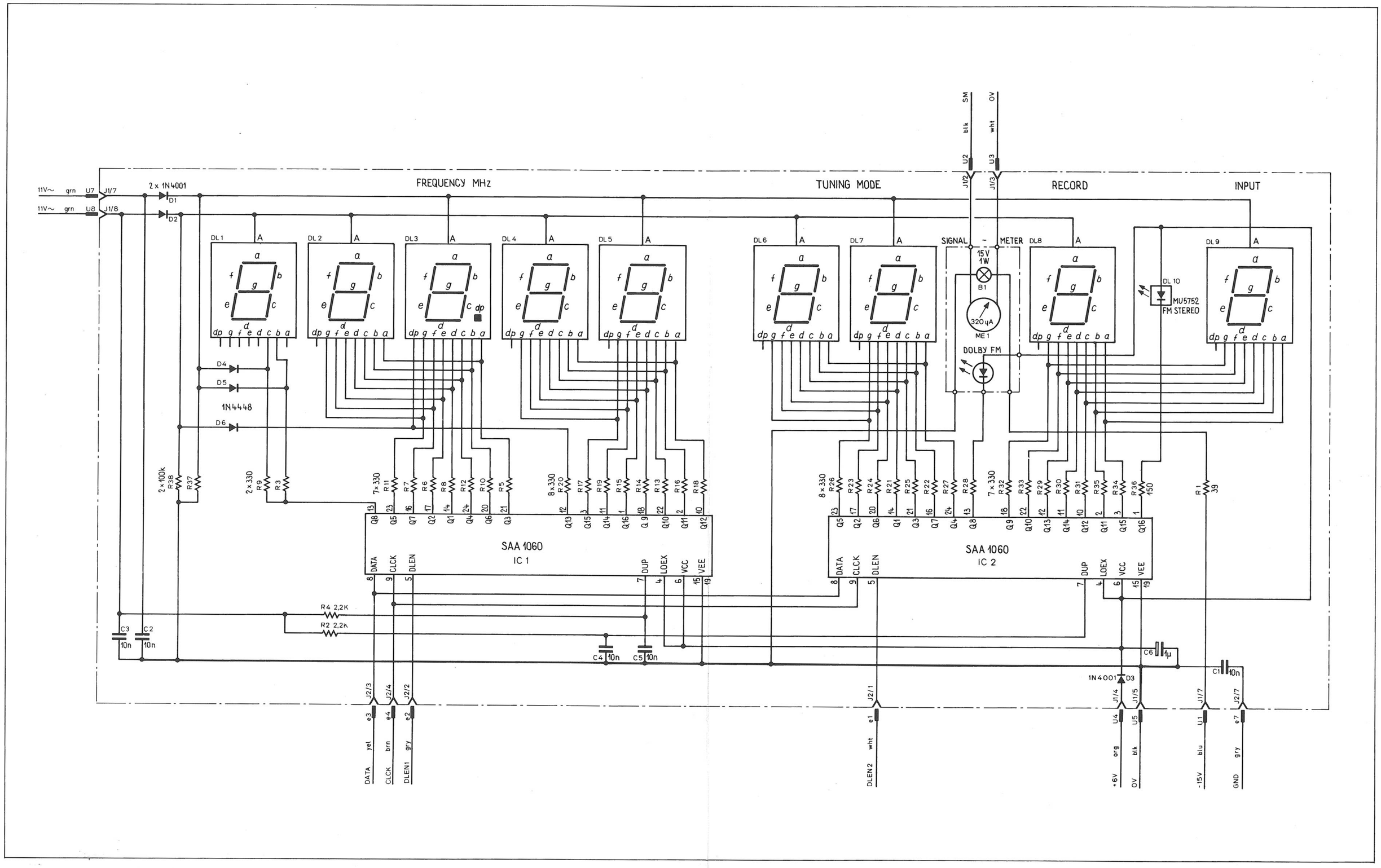

## RF FRONT END PCB 1.166.100

| IND | POS NO | PART NO | VALUE | SPECIFICATIONS/EQUIVALENT | MFR |
|---|---|---|---|---|---|
| | C 1 | 59.32.3103 | 0.01µF | 20% CER | |
| | C 2 | 59.32.4471 | 470pF | " " | |
| | C 3 | 59.18.0106 | 13pF | variable " | |
| | C 4 | 59.32.4471 | 470pF | 20% " | |
| | C 5 | 59.32.3103 | 0.01µF | " " | |
| | C 6 | 59.99.0182 | 1000pF | " " | |
| | C 7 | 59.99.0182 | 1000pF | " " | |
| | C 8 | 59.32.3103 | 0.01µF | " " | |
| | C 9 | 59.99.0182 | 1000pF | " " | |
| | C 10 | 59.32.3103 | 0.01µF | " " | |
| | C 11 | 59.99.0182 | 1000pF | " " | |
| | C 12 | 59.18.0106 | 13pF | variable " | |
| | C 13 | 59.32.3103 | 0.01µF | 20% " | |
| | C 14 | 59.32.3103 | 0.01µF | " " | |
| | C 15 | 59.32.4471 | 470pF | " " | |
| | C 16 | 59.30.4339 | 3.3µF | " TA 16V | |
| | C 17 | 59.18.0106 | 13pF | variable CER | |
| | C 18 | 59.32.4471 | 470pF | 20% CER | |
| | C 19 | 59.99.0182 | 1000pF | " " | |
| | C 20 | " " " | " | " " | |
| | C 21 | " " " | " | " " | |
| | C 22 | " " " | " | " " | |
| | C 23 | 59.32.3103 | 0.01µF | " " | |
| | C 24 | 59.99.0182 | 1000pF | " " | |
| | C 25 | " " " | " | " " | |
| | C 26 | 59.18.0106 | 13pF | variable " | |
| | C 27 | 59.32.3103 | 0.01µF | 20% " | |
| | C 28 | 59.32.4471 | 470pF | " " | |
| | C 29 | 59.30.4339 | 3.3µF | " TA 16V | |
| | C 30 | 59.18.0106 | 13pF | variable CER | |

| IND | DATE | NAME |
|---|---|---|
| 4 | | |
| 3 | | |
| 2 | 21.6.78 | Rom. |
| 1 | 16.6.78 | Rom. |
| 0 | 6.10.77 | Bal. |

CER = CERAMIC
TA = Solid Tantalum

STUDER RF Front End PL 1.166.100 PAGE 1 OF 4

| IND | POS NO | PART NO | VALUE | SPECIFICATIONS/EQUIVALENT | MFR |
|---|---|---|---|---|---|
| | L 8 | 62.02.4101 | 100µH | | |
| | L 9 | 1.012.152 | | IF COIL | ST |
| | | | | | |
| | P1-8 | 54.02.0320 | 2.8x0.8mm | male connector | |
| | | | | | |
| | Q 1 | 50.03.0311 | 17853 | Dual Gate Mos Fet | ST |
| | Q 2 | " " " | " | " " " " | |
| | Q 3 | " " " | " | " " " " | |
| | Q 4 | 50.03.0327 | MPS6544 | NPN | M |
| | Q 5 | " " " | " | " | " |
| | | | | | |
| | R 1 | 57.41.4473 | 47kΩ | 5% | |
| | R 2 | " " " | " | " | |
| | R 3 | " " " | " | " | |
| | R 4 | 57.41.4224 | 220kΩ | " | |
| | R 5 | 57.41.4153 | 15kΩ | " | |
| | R 6 | 57.41.4472 | 4.7kΩ | " | |
| | R 7 | 57.41.4154 | 150Ω | " | |
| | R 8 | 57.41.4271 | 270Ω | " | |
| | R 9 | 57.41.4154 | 150Ω | " | |
| | R 10 | 57.41.4103 | 10kΩ | " | |
| 1 | R 11 | 57.11.4104 | 100kΩ | 10% | |
| | R 12 | 57.02.5220 | 22Ω | " | |
| | R 13 | 57.41.4221 | 220Ω | 5% | |
| 1 | R 14 | 57.11.4224 | 220kΩ | 10% | |
| | R 15 | 57.41.4103 | 10kΩ | 5% | |
| 1 | R 16/17 | 57.11.4104 | 100kΩ | 10% | |
| 1 | R 18/19 | " " " | " | " | |
| 1 | R 20 | " " " | " | " | |
| | R 21 | 57.41.4473 | 47kΩ | 5% | |

| IND | DATE | NAME |
|---|---|---|
| 4 | | |
| 3 | | |
| 2 | 21.6.78 | Rom. |
| 1 | 16.6.78 | Rom. |
| 0 | 6.10.77 | Bal. |

ST = STUDER
M = MOTOROLA

STUDER RF Front End PL 1.166.100 PAGE 3 OF 4

| IND | POS NO | PART NO | VALUE | SPECIFICATIONS/EQUIVALENT | MFR |
|---|---|---|---|---|---|
| | C 31 | 59.32.4471 | 470pF | 20% CER | |
| | C 32 | 59.99.0182 | 1000pF | " " | |
| | C 33 | 59.99.0182 | " | " " | |
| | C 34 | 59.32.3103 | 0.01µF | " " | |
| | C 35 | 59.99.0182 | 1000pF | " " | |
| | C 36 | " " " | " | " " | |
| | C 37 | 59.32.3103 | 0.01µF | " " | |
| | C 38 | 59.99.0182 | 1000pF | " " | |
| | C 39 | 59.34.1100 | 10pF | 5% " | |
| | C 40 | 59.99.0182 | 1000pF | 20% " | |
| | C 41 | 59.34.2151 | 150pF | 2% " N150 | |
| | C 42 | 59.34.2151 | " | " " " | |
| | C 43 | 59.34.1120 | 12pF | 5% " NPO | |
| | C 44 | 59.34.1120 | " | " " " | |
| | C 45 | 59.32.3103 | 0.01µF | 20% " | |
| | | | | | |
| | D 1-17 | 50.04.0126 | BB 204 red | only | SI |
| | | | | | |
| | J 1 | 54.01.0288 | 5pol | | |
| | | | | | |
| 2 | FL 1 | 1.166.512 | Type 2.4.6 | IF Filter | ST |
| 2 | FL 2 | 1.166.513 | Type 3 | " " | " |
| | | | | | |
| | L 1 | 1.166.100.01 | | ANTENNA COIL | ST |
| | L 2 | 1.166.100.02 | | RF COIL 1 | " |
| | L 3 | 1.166.100.03 | | RF COIL 2 | " |
| | L 4 | 1.166.100.02 | | RF COIL 1 | " |
| | L 5 | 62.02.4101 | 100µH | | |
| | L 6 | 1.166.100.03 | | RF COIL 2 | ST |
| | L 7 | 62.02.4101 | 100µH | | |

| IND | DATE | NAME |
|---|---|---|
| 4 | | |
| 3 | | |
| 2 | 21.6.78 | Rom. |
| 1 | 16.6.78 | Rom. |
| 0 | 6.10.77 | Bal. |

CER = CERAMIC
SI = SIEMENS
ST = STUDER

STUDER RF Front End PL 1.166.100 PAGE 2 OF 4

| IND | POS NO | PART NO | VALUE | SPECIFICATIONS/EQUIVALENT | MFR |
|---|---|---|---|---|---|
| | R 22 | 57.41.4224 | 220kΩ | 5% | |
| | R 23 | 57.41.4153 | 15kΩ | " | |
| | R 24 | 57.41.4154 | 150kΩ | " | |
| | R 25 | 57.41.4154 | 150kΩ | " | |
| | R 26 | 57.41.4271 | 270Ω | " | |
| | R 27 | 57.41.4103 | 10kΩ | " | |
| 1 | R 28 | 57.11.4104 | 100kΩ | 10% | |
| | R 29 | 57.02.5220 | 22Ω | 10% | |
| | R 30 | 57.41.4221 | 220Ω | 5% | |
| 1 | R 31 | 57.11.4224 | 220kΩ | 10% | |
| | R 32 | 57.41.4103 | 10kΩ | 5% | |
| 1 | R 33/34 | 57.11.4104 | 100kΩ | 10% | |
| 1 | R 35/36 | " " " | " | " | |
| 1 | R 37 | " " " | " | " | |
| | R 38 | 57.41.4123 | 12kΩ | 5% | |
| | R 39 | 57.41.4473 | 47kΩ | " | |
| | R 40 | 57.41.4154 | 150kΩ | " | |
| | R 41 | 57.41.4823 | 82kΩ | " | |
| | R 42 | 57.41.4473 | 47kΩ | " | |
| | R 43 | 57.41.4221 | 220Ω | " | |
| | R 44 | " " " | " | " | |
| | R 45 | " " " | " | " | |
| | R 46 | 57.41.4101 | 100Ω | " | |
| | R 47 | " " " | " | " | |
| | R 48 | 57.41.4470 | 47Ω | " | |
| | R 49 | " " " | " | " | |
| | R 50 | 57.41.4273 | 27kΩ | " | |
| | R 51 | " " " | " | " | |
| | | | | | |
| | | | | | |

| IND | DATE | NAME |
|---|---|---|
| 4 | | |
| 3 | | |
| 2 | 21.6.78 | Rom. |
| 1 | 16.6.78 | Rom. |
| 0 | 6.10.77 | Bal. |

STUDER RF Front End PL 1.166.100 PAGE 4 OF 4

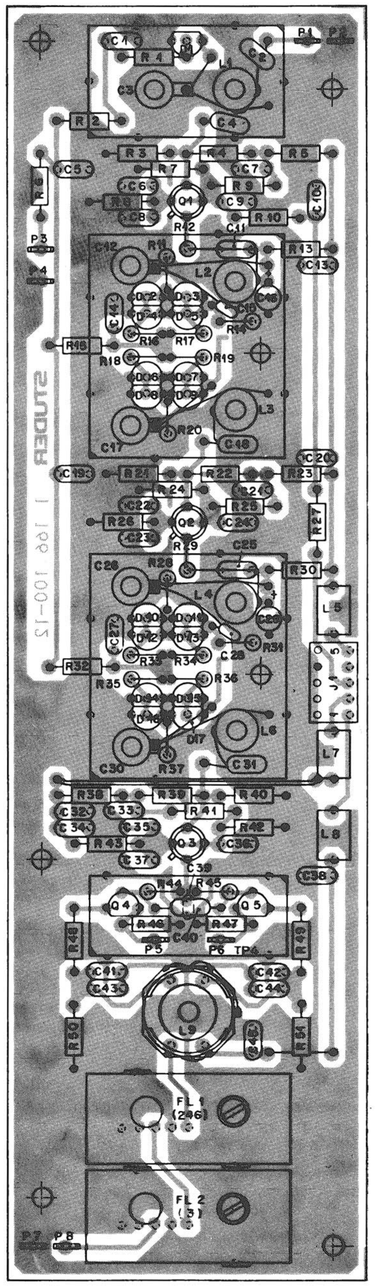

**RF FRONT END PCB 1.166.100**

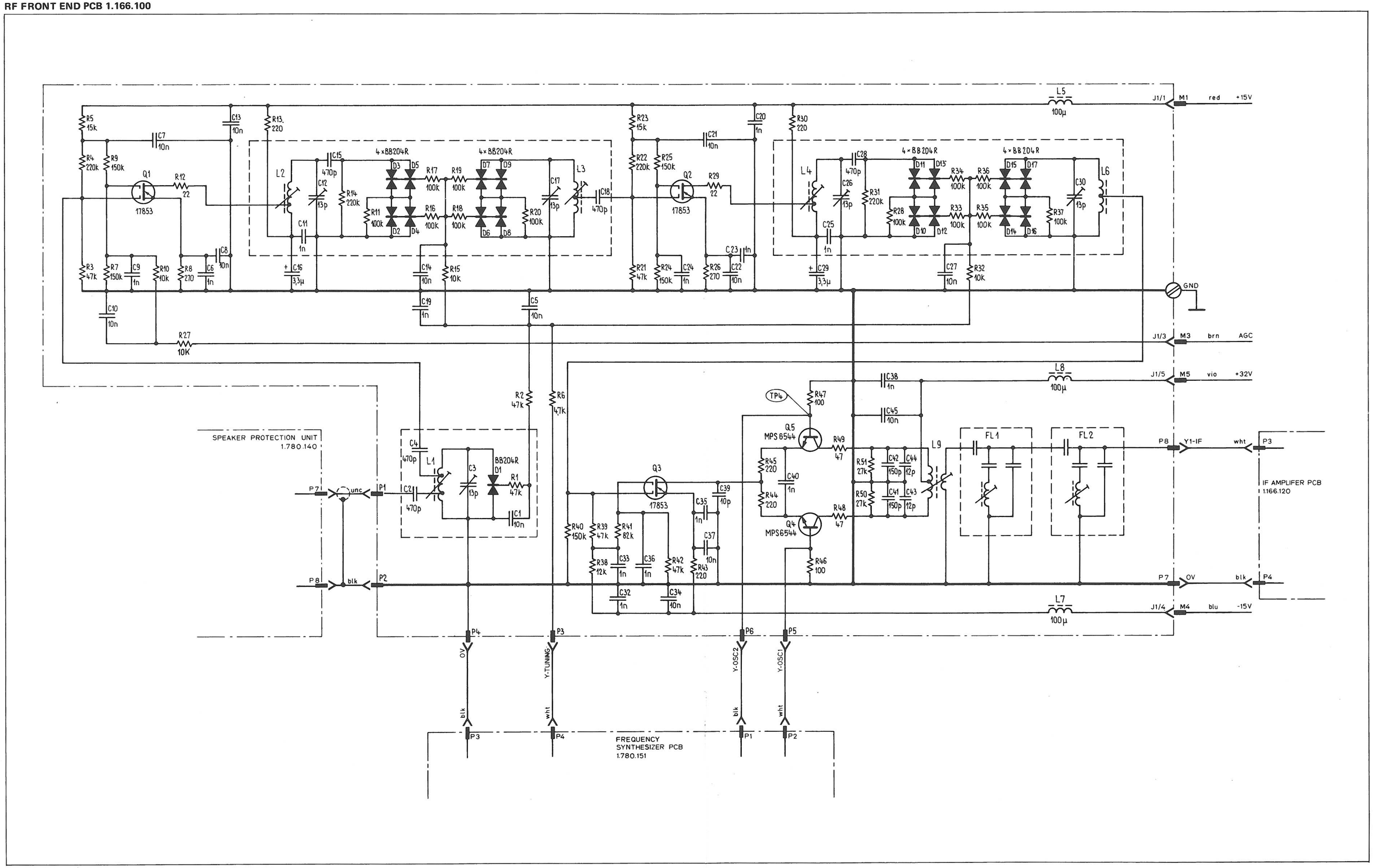

## IF AMPLIFIER PCB 1.166.120

| IND | POS NO | PART NO | VALUE | SPECIFICATIONS/EQUIVALENT | MFR |
|---|---|---|---|---|---|
| | C 1 | 59.34.2470 | 47 pF | 20% CER | |
| | C 2 | 59.32.3103 | 0.01 µF | " " | |
| | C 3 | " " " | " | " " | |
| | C 4 | 59.34.2181 | 180 pF | 5% CER N150 | |
| | C 5 | 59.32.3103 | 0.01 µF | 20% CER | |
| | C 6 | 59.34.2470 | 47 pF | " " | |
| | C 7 | 59.32.3103 | 0.01 µF | " " | |
| | C 8 | 59.34.2181 | 180 pF | 5% CER N150 | |
| | C 9 | 59.32.3103 | 0.01 µF | 20% CER | |
| | C 10 | 59.32.2332 | 3300 pF | 10% " | |
| | C 11 | 59.32.3103 | 0.01 µF | 20% " | |
| | C 12 | " " " | " | " " | |
| | C 13 | 59.34.2470 | 47 pF | " " | |
| | C 14 | 59.32.3103 | 0.01 µF | " " | |
| | C 15 | " " " | " | " " | |
| | C 16 | 59.34.2181 | 180 pF | 5% CER N150 | |
| | C 17 | 59.32.3103 | 0.01 µF | 20% CER | |
| | C 18 | 59.34.2470 | 47 pF | " " | |
| | C 19 | 59.32.3103 | 0.01 µF | " " | |
| | C 20 | 59.34.2181 | 180 pF | 5% CER N150 | |
| | C 21 | 59.30.4339 | 3.3 µF | TA 16 V | |
| | C 22 | 59.32.3103 | 0.01 µF | 20% CER | |
| | | | | | |
| | D 1..6 | 50.04.0953 | AA116 | Ge-Diode | ANY |
| | D 7 | 50.04.0125 | 1N4448 | Si-Diode | ANY |
| | | | | | |
| 1.2 | FL 1 | 1.166.520-81 | Type 10 | IF-Filter | ST |
| 1 | FL 2 | 1.166.518 | " 8 | " " | " |
| 1 | FL 3 | 1.166.517 | 7 | " " | " |
| 1 | FL 4 | 1.166.512 | 2,4,6 | " " | " |

| IND | DATE | NAME |
|---|---|---|
| 4 | | |
| 3 | 24.5.82 | Rom. |
| 2 | 19.7.79 | Rom. |
| 1 | 21.6.78 | Rom. |
| 0 | 5.10.77 | Sa. |

CER = Ceramic ST = STUDER
TA = solid Tantalum

STUDER IF-Strip PL 1.166.120.00 PAGE 1 OF 3

| IND | POS NO | PART NO | VALUE | SPECIFICATIONS/EQUIVALENT | MFR |
|---|---|---|---|---|---|
| 1 | FL 5 | 1.166.515 | Type 5 | IF-Filter | ST |
| 1 | FL 6 | 1.166.512 | Type 2,4,6 | " " | " |
| | | | | | |
| | IC1..4 | 50.05.0101 | CA 3053 | Diff. Amp | RCA |
| | | | | | |
| | J 1 | 50.01.0218 | 7pol | | ST |
| | | | | | |
| | P1..4 | 54.02.0320 | 2.8×0,8 | male | ST |
| | | | | | |
| | Q 1 | 50.03.0327 | MPS 6544 | | M |
| | Q 2 | 50.03.0318 | BC178 B | | ANY |
| | Q 3 | 50.03.0438 | BC108 B | | " |
| | Q 4 | " " " | " | | " |
| | | | | | |
| | R 1 | 57.41.4273 | 27 kΩ | 5% | |
| | R 2 | 57.41.4471 | 470 Ω | " | |
| | R 3 | 57.41.4221 | 220 Ω | " | |
| | R 4 | 57.41.4472 | 4700 Ω | " | |
| | R 5 | 57.41.4473 | 47 kΩ | " | |
| | R 6 | 57.41.4332 | 3300 Ω | " | |
| | R 7 | 57.41.4221 | 220 Ω | " | |
| | R 8 | 57.41.4152 | 1500 Ω | " | |
| | R 9 | " " " | " | " | |
| | R 10 | 57.41.4101 | 100 Ω | " | |
| | R 11 | " " " | " | " | |
| | R 12 | 57.41.4102 | 1 kΩ | " | |
| | R 13 | 57.41.4271 | 270 Ω | " | |
| | R 14 | 57.41.4473 | 47 kΩ | " | |
| | R 15 | 57.41.4152 | 1500 Ω | " | |
| | R 16 | 57.41.4102 | 1 kΩ | " | |

| IND | DATE | NAME |
|---|---|---|
| 4 | | |
| 3 | 24.5.82 | Rom. |
| 2 | 19.7.79 | Rom. |
| 1 | 21.6.78 | Rom. |
| 0 | 5.10.77 | Sal. |

ST = STUDER
RCA = RCA
M = Motorola

STUDER IF-Strip PL 1.166.120.00 PAGE 2 OF 3

| IND | POS NO | PART NO | VALUE | SPECIFICATIONS/EQUIVALENT | MFR |
|---|---|---|---|---|---|
| | R 17 | 57.41.4271 | 270 Ω | 5% | |
| | R 18 | 57.41.4473 | 47 kΩ | " | |
| | R 19 | 57.41.4333 | 33 kΩ | " | |
| | R 20 | " " " | " | " | |
| | R 21 | 57.41.4152 | 1500 Ω | " | |
| | R 22 | 57.41.4473 | 47 kΩ | " | |
| | R 23 | " " " | " | " | |
| | R 24 | 57.41.4102 | 1 kΩ | " | |
| | R 25 | 57.41.4153 | 15 kΩ | " | |
| | R 26 | 57.41.4472 | 4,7 kΩ | " | |
| | R 27 | 57.41.4271 | 270 Ω | " | |
| | R 28 | 57.41.4472 | 4700 Ω | " | |
| | R 29 | 57.41.4103 | 10 kΩ | " | |
| | R 30 | 57.41.4104 | 100 kΩ | " | |
| | R 31 | 57.41.4152 | 1.5 kΩ | " | |
| | R 32 | 57.41.4273 | 27 kΩ | " | |
| | R 33 | 57.41.4473 | 47 kΩ | " | |
| | R 34 | 57.41.4223 | 22 kΩ | " | |
| | R 35 | 57.41.4472 | 4.7 kΩ | " | |
| | R 36 | 57.41.4102 | 1 kΩ | " | |
| | | | | | |
| 2 | L 1-4 | 1.726.740.01 | | IF-Transformer | ST |

| IND | DATE | NAME |
|---|---|---|
| 4 | | |
| 3 | 24.5.82 | Rom. |
| 2 | 19.7.79 | Rom. |
| 1 | 21.6.78 | Rom. |
| 0 | 5.10.77 | Sal. |

ST = STUDER

STUDER IF-Strip PL 1.166.120.00 PAGE 3 OF 3

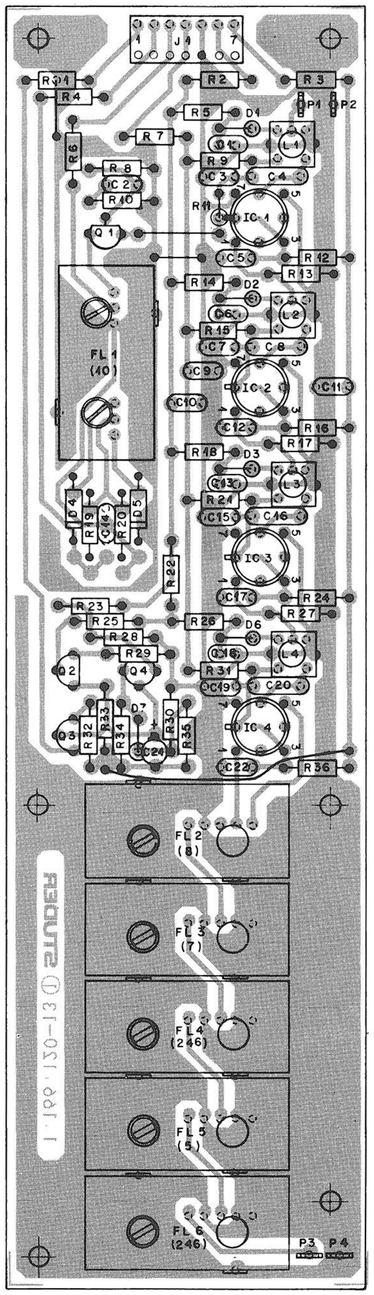

IF AMPLIFIER PCB 1.166.120

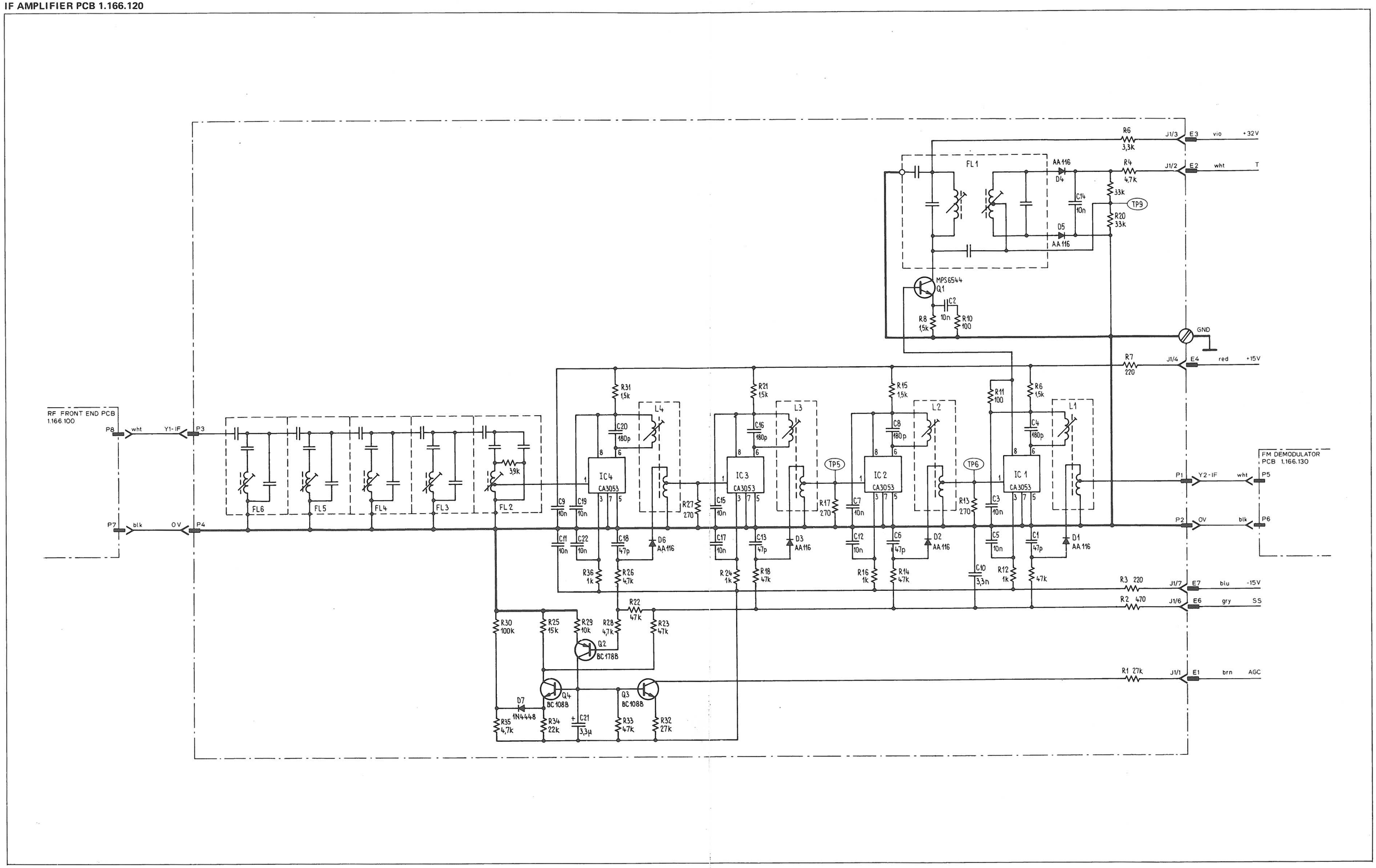

## FM DEMODULATOR PCB 1.166.130

| POS NO | PART NO | VALUE | SPECIFICATIONS | EQUIVALENT | MFR |
|---|---|---|---|---|---|
| C 1 | 59.30.6109 | 1 µF | 35V TA | | |
| C 2 | 59.30.4339 | 3.3 µF | 16V TA | | |
| C 3 | 59.30.6109 | 1 µF | 35V TA | | |
| C 4 | 59.34.2220 | 22 pF | 5% CER | | |
| C 5 | 59.32.3103 | 10000 pF | CER | | |
| C 6 | 59.32.3103 | 10'000 pF | CER | | |
| C 7 | 59.34.5471 | 470 pF | 5% CER | | |
| C 8 | 59.30.6109 | 1 µF | 35V TA | | |
| C 9 | 59.34.2220 | 22 pF | 5% CER | | |
| C 10 | 59.34.2470 | 47 pF | 5% CER | | |
| C 11 | 59.34.2470 | 47 pF | 5% CER | | |
| ① C 12 | 59.32.2222 | 2200 pF | CER | | |
| C 13 | 59.32.3103 | 10'000 pF | CER | | |
| C 14 | 59.34.2181 | 180 pF | 5% CER | | |
| C 15 | 59.32.3103 | 10000 pF | CER | | |
| C 16 | 59.34.4820 | 82 pF | 5% CER | | |
| C 17 | 59.34.4331 | 330 pF | 5% CER | | |
| C 18 | 59.32.3103 | 10000 pF | CER | | |
| C 19 | 59.32.3103 | 10'000 pF | CER | | |
| C 20 | 59.32.3103 | 10'000 pF | CER | | |
| C 21 | 59.32.3103 | 10'000 pF | CER | | |
| C 22 | 59.34.2470 | 47 pF | 5% N150 CER | | |
| C 23 | 59.32.3103 | 10000 pF | CER | | |
| C 24 | 59.32.3103 | 10'000 pF | CER | | |
| C 25 | 59.25.5220 | 22 µF | 40V EL | | |
| C 26 | 59.32.3103 | 10000 pF | CER | | |
| C 27 | 59.32.3103 | 10'000 pF | CER | | |
| IC 1 | 50.99.0108 | MC1496G | MODULATOR (NOISE SELECTED) | | M |
| IC 2 | 50.05.0101 | CA3053 | DIFF. AMP | | RCA |
| IC 3 | 50.05.0101 | CA3053 | DIFF. AMP | | RCA |
| J 1 | 54.01.0212 | 7 Pol | | | |
| L 1 | 62.02.4101 | 100 µH | | | |
| L 2 | 62.02.4101 | 100 µH | | | |
| L 3 | 1.166.120-01 | | I.F-TRANSFORMER | | |
| Q 1 | 50.03.0438 | BC108B | NPN | | |
| Q 2 | 50.03.0438 | BC108B | NPN | | |
| Q 3 | 50.03.0438 | BC108B | NPN | | |
| Q 4 | 50.03.0439 | BC109C | NPN | | |
| Q 5 | 50.03.0439 | BC109C | NPN | | |
| | | | METAL OR PLASTIC EQUIV. | | ANY |
| R 1 | 57.41.4104 | 100 KΩ | 5% 0.25W | | |
| R 2 | 57.41.4472 | 4.7 KΩ | 5% 0.25W | | |

TA: TANTALUM
CER: CERAMIC
EL: ELECTROLYTIC
TF: METAL FILM

M: MOTOROLA
RCA

| IND | DATE | NAME |
|---|---|---|
| ⑥ | | |
| ⑤ | | |
| ④ | | |
| ③ | 27.5.80 | Kern |
| ② | 3.10.77 | Kaufmann |

STUDER FM-DEMODULATOR 1.166.130 PAGE 1 of 2

| POS NO | PART NO | VALUE | SPECIFICATIONS | EQUIVALENT | MFR |
|---|---|---|---|---|---|
| R 3 | 57.41.4473 | 47 KΩ | | | |
| R 4 | " | " | | | |
| R 5 | 57.41.4182 | 1.8 KΩ | | | |
| R 6 | 57.41.4104 | 100 KΩ | | | |
| R 7 | 57.41.4822 | 8.2 KΩ | | | |
| R 8 | 57.41.4471 | 470 Ω | | | |
| R 9 | 57.41.4562 | 5.6 KΩ | | | |
| R 10 | 57.41.4472 | 4.7 KΩ | | | |
| R 11 | 57.41.4221 | 220 Ω | | | |
| R 12 | 57.41.4103 | 10 KΩ | | | |
| R 13 | 57.41.4104 | 100 KΩ | | | |
| R 14 | 57.41.4560 | 56 KΩ | 5% 0.25W | | |
| R 15 | 57.41.4121 | 120 Ω | | | |
| R 16 | 57.41.4562 | 5.6 KΩ | | | |
| R 17 | 57.41.4121 | 120 Ω | | | |
| R 18 | 57.41.4391 | 390 Ω | | | |
| R 19 | 57.41.4182 | 1.8 KΩ | | | |
| R 20 | 57.41.4472 | 4.7 KΩ | | | |
| R 21 | 57.41.4472 | 4.7 KΩ | | | |
| R 22 | 57.41.4221 | 220 Ω | | | |
| R 23 | 57.41.4221 | 220 Ω | | | |
| R 24 | 57.41.4103 | 10 KΩ | | | |
| R 25 | 57.39.1002 | 10 KΩ | 1% 0.25W MF | | |
| R 26 | 57.39.1002 | 10 KΩ | 1% 0.25W MF | | |
| R 27 | 57.41.4121 | 120 Ω | | | |
| R 28 | 57.41.4222 | 2.2 KΩ | | | |
| R 29 | 57.41.4472 | 4.7 KΩ | | | |
| R 30 | 57.41.4470 | 47 Ω | | | |
| R 31 | 57.41.4221 | 220 Ω | | | |
| R 32 | 57.41.4822 | 8.2 KΩ | 5% 0.25W | | |
| R 33 | 57.41.4102 | 1 KΩ | | | |
| R 34 | 57.41.4472 | 4.7 KΩ | | | |
| R 35 | 57.41.4392 | 3.9 KΩ | | | |
| R 36 | 57.41.4102 | 1 KΩ | | | |
| R 37 | 57.41.4471 | 470 Ω | | | |
| R 38 | 57.41.4272 | 2.7 KΩ | | | |
| P1-6 | 54.02.0320 | 2.8x0.8 | | | |

| IND | DATE | NAME |
|---|---|---|
| ⑥ | | |
| ⑤ | | |
| ④ | | |
| ③ | 27.5.80 | Kern |
| ② | 3.10.77 | Kaufmann |

STUDER FM-DEMODULATOR 1.166.130 PAGE 2 of 2

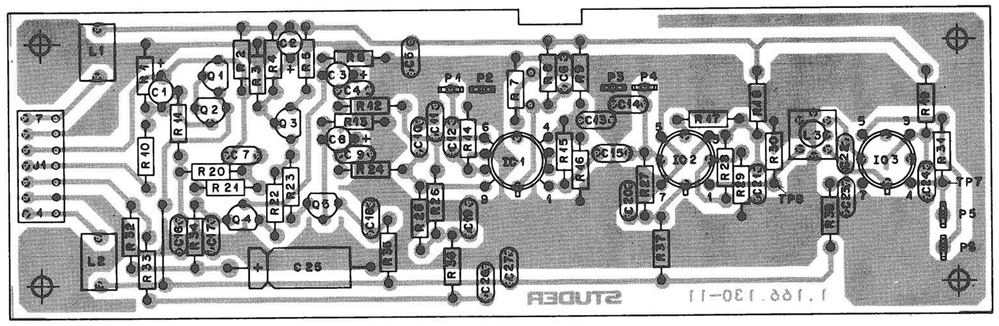

**FM DEMODULATOR PCB 1.166.130**

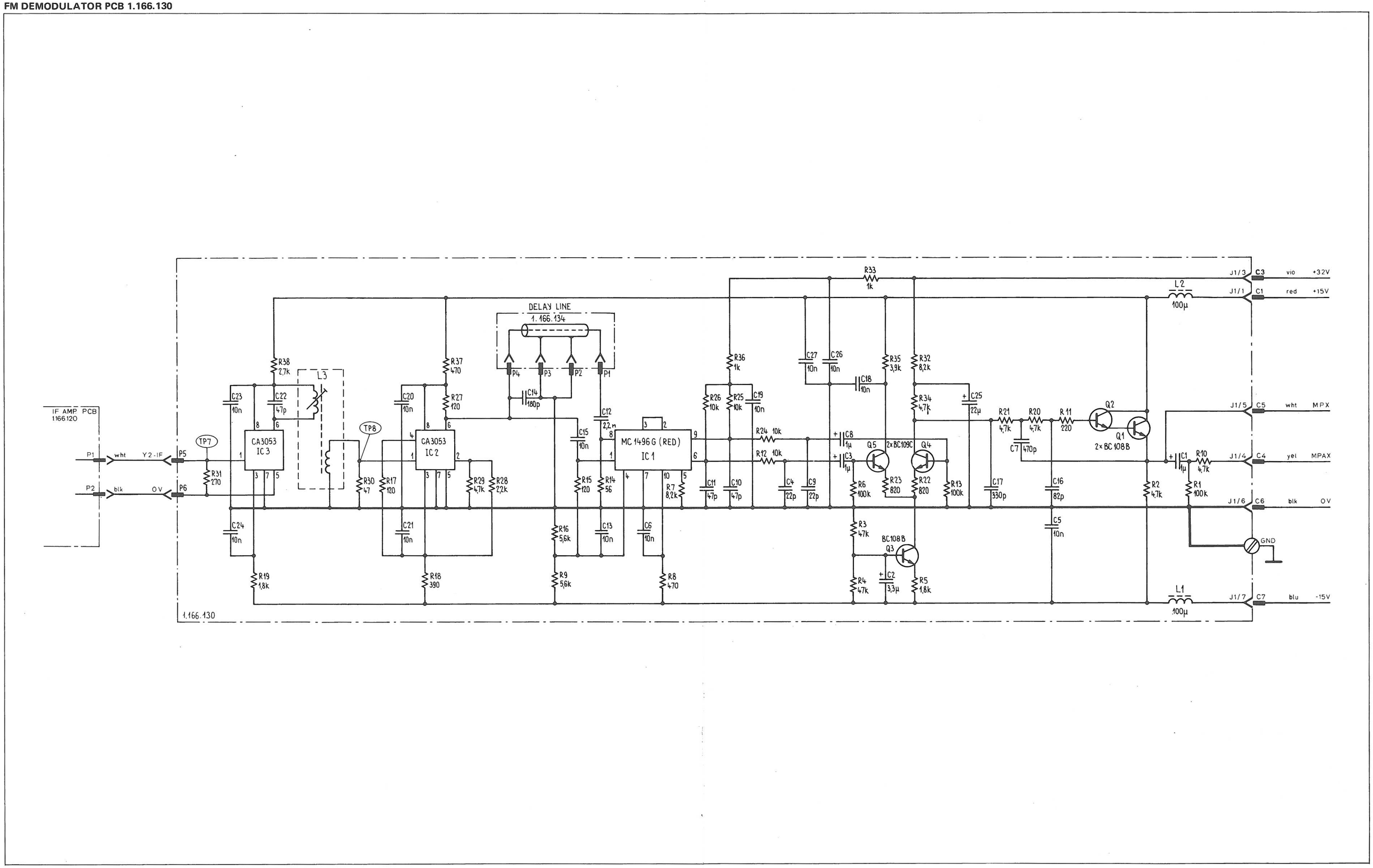

## STEREO DECODER PCB 1.166.150

| POS NO | PART NO | VALUE | SPECIFICATIONS | EQUIVALENT | MFR |
|---|---|---|---|---|---|
| C 01 | 59.11.6103 | 10000 pF | 5% PC | | |
| C 02 | 59.11.6272 | 2700 pF | 5% PC | | |
| C 03 | 59.11.6473 | 47.000 pF | 2,5% PC | | |
| C 04 | 59.11.6472 | 4700 pF | 5% PC | | |
| C 05 | 59.30.6100 | 10 µF | 35V TA | | |
| C 06 | 59.34.5391 | 390 pF | 5% CER | | |
| C 07 | 59.11.6332 | 3300 pF | 5% PC | | |
| C 08 | 59.11.4103 | 10000 pF | 2,5% PC | | |
| C 09 | 59.22.4221 | 220 µF | 16V EL | | |
| C 10 | 59.32.3103 | 10000 pF | CER | | |
| C 11 | 59.30.4100 | 10 µF | 16V TA | | |
| C 12 | 59.30.6100 | 10 µF | 35V TA | | |
| C 13 | 59.34.5391 | 390 pF | 5% KER | | |
| C 14 | 59.11.6332 | 3300 pF | 5% PC | | |
| C 15 | 59.11.6102 | 1000 pF | 5% PC | | |
| C 16 | 59.30.6478 | 0.47 µF | 35V TA | | |
| C 17 | 59.11.6472 | 4700 pF | 5% PC | | |
| C 18 | 59.30.4100 | 10 µF | 16V TA | | |
| C 19 | 59.11.6102 | 1000 pF | 5% PC | | |
| C 20 | 59.11.6272 | 2700 pF | 5% PC | | |
| C 21 | 59.11.4103 | 10000 pF | 2,5% PC | | |
| C 22 | 59.30.4100 | 10 µF | 16V TA | | |
| C 23 | 59.32.3103 | 10.000 pF | CER | | |
| C 24 | 59.30.6478 | 0.47 µF | 35V TA | | |
| C 25 | 59.30.4100 | 10 µF | 16V TA | | |
| C 26 | 59.30.6478 | 0.47 µF | 35V TA | | |
| C 27 | 59.30.6478 | 0.47 µF | 35V TA | | |
| C 28 | 59.24.2101 | 100 pF | 2,5% N150 CER | | |
| C 29 | 59.11.6102 | 1000 pF | 5% PC | | |
| C 30 | 59.31.6105 | 1 µF | 10% MPTP | | |
| C 31 | 59.32.2411 | 820 pF | 10% CER | | |
| C 32 | 59.31.6224 | 0.22 µF | 10% MPTP | | |
| C 33 | 59.11.4472 | 4700 pF | 2,5% PC | | |
| C 34 | 59.11.6102 | 1000 pF | 5% PC | | |
| C 35 | 59.30.4100 | 10 µF | 16V TA | | |
| C 36 | 59.30.6478 | 0.47 µF | 35V TA | | |
| C 37 | 59.11.4103 | 10.000 pF | 2,5% PC | | |
| C 38 | 59.11.4103 | 10.000 pF | 2,5% PC | | |
| D 01 | 50.04.0126 | BB 204B | TUNING DIODE | | SI |
| D 02 | 50.04.4108 | 5,6V | 5,6V 0,5mA | | |
| D 03 | 50.04.0125 | 1N 4148 | | | HUY |
| IC 01 | 50.05.0122 | ML 1496 G | Modulator | | MTF |
| IC 02 | 50.06.0113 | SN74S113 | Dual JK-FlipFlop | | HUY |

SI: SIEMENS
M: MOTOROLA
F: FAIRCHILD

PC: POLYCARBONATE
TA: TANTALUM
CER: CERAMIC
EL: ELECTROLYTIC
MPTP: METALIZED POLYESTER

| IND | DATE | NAME |
|---|---|---|
| ④ | | |
| ③ | | |
| ② | 12.2.80 | Tom |
| ① | 15.12.78 | Tom |
| 0 | 7.10.77 | Bellido |

STUDER — STEREO DECODER — 1.166.150.00 — PAGE 1 of 3

| POS NO | PART NO | VALUE | SPECIFICATIONS | EQUIVALENT | MFR |
|---|---|---|---|---|---|
| R 21 | 57.39.4751 | 4.75 K | 1% MF | | |
| R 22 | 57.11.4103 | 10 K | | | |
| R 23 | 57.11.4101 | 100 Ω | | | |
| R 24 | 57.11.4471 | 470 Ω | | | |
| R 25 | 57.11.4471 | 470 Ω | | | |
| R 26 | 57.11.4472 | 4,7 K | | | |
| R 27 | 57.11.4103 | 10 K | | | |
| R 28 | 57.11.4102 | 1 K | | | |
| R 29 | 57.11.4702 | 7k | | | |
| R 30 | 57.11.4332 | 3,3 K | | | |
| R 31 | 57.11.4102 | 1 K | | | |
| R 32 | 57.11.4332 | 3,3 K | | | |
| R 33 | 57.11.4102 | 1 K | | | |
| R 34 | 57.11.4224 | 22 K | | | |
| R 35 | 57.11.4474 | 470 K | | | |
| R 36 | 57.11.4104 | 100 K | | | |
| R 37 | 57.11.4224 | 220 K | 5% | | |
| R 38 | 57.11.4472 | 4,7 K | | | |
| R 39 | 57.11.4224 | 220 K | | | |
| R 40 | 57.11.4104 | 100 K | | | |
| R 41 | 57.11.4103 | 10 K | | | |
| R 42 | 57.11.4104 | 100 K | | | |
| R 43 | 57.11.4472 | 4,7 K | | | |
| R 44 | 57.11.4472 | 4,7k | | | |
| R 45 | 57.11.4221 | 220 Ω | | | |
| R 46 | 57.11.4221 | 220 Ω | | | |
| R 47 | 57.11.4474 | 470 K | | | |
| R 48 | 57.11.4104 | 100 K | | | |
| R 49 | 57.11.4472 | 4,7 K | | | |
| R 50 | 57.11.4103 | 10 K | | | |
| R 51 | 57.11.4104 | 100 K | | | |
| R 52 | 57.11.4104 | 100 K | | | |

MF: METAL FILM

| IND | DATE | NAME |
|---|---|---|
| ④ | | |
| ③ | | |
| ② | 12.2.80 | Tom |
| ① | 15.12.78 | Tom |
| 0 | 7.10.77 | Bellido |

STUDER — STEREO DECODER — 1.166.150.00 — PAGE 2 of 3

| POS NO | PART NO | VALUE | SPECIFICATIONS | EQUIVALENT | MFR |
|---|---|---|---|---|---|
| IC 03 | 50.05.0137 | TBA221 | Dual Op. Amp. SN76131, µA739A | | TI HF |
| IC 04 | 50.05.0122 | ML 1496 G | | | |
| J 01 | 54.01.0219 | 15 Pol | | | |
| L 01 | 1.166.157.00 | | 15kHz LP 2 | | |
| L 02 | 1.166.154.00 | | 19kHz Trap | | |
| L 03 | 1.166.156.00 | | 15kHz LP1 | | |
| L 04 | 1.166.158.00 | | 15kHz LP1 | | |
| L 05 | 62.01.0411 | 2mH | 5% | | |
| L 06 | 1.166.157.00 | | 15kHz LP2 | | |
| L 07 | 1.166.155.00 | | 38kHz Coil | | |
| L 08 | 1.166.152.00 | | 76kHz Dec. Coil | | |
| L 09 | 1.166.153.00 | | 19kHz Ampl. Coil | | |
| L 10 | 1.166.151.00 | | 19kHz Filter Coil | | |
| L 11 | 1.166.151.00 | | | | |
| ① ~~R 17~~ | ~~54.02.0330~~ | ~~2,5-6,8~~ | | | |
| Q 01 | 50.03.0439 | BC 109C | | | |
| Q 02 | 50.03.0439 | BC 109C | | | |
| Q 03 | 50.03.0439 | BC 109C | | | TAIT |
| Q 04 | 50.03.0432 | BC 108B | NPN | | |
| Q 05 | 50.03.0432 | BC 108B | | | |
| R 01 | 57.39.4751 | 4,75 K | 1% MF | | |
| R 02 | 57.11.4104 | 100 K | 5% | | |
| R 03 | 57.11.4682 | 6,8 K | 5% | | |
| R 04 | 57.39.4751 | 4,75 K | 1% MF | | |
| R 05 | 57.39.4751 | 4,75 K | 1% | | |
| R 06 | 57.11.4222 | 2,2 K | 5% | | |
| R 07 | 57.11.4272 | 2,7 K | 5% | | |
| R 08 | 57.11.4471 | 470 Ω | 5% | | |
| R 09 | 57.39.1501 | 1,5 K | 1% MF | | |
| R 10 | 57.11.4562 | 5,6 K | 5% | | |
| R 11 | 57.39.1271 | 1,27 K | 1% MF | | |
| R 12 | 57.39.1821 | 1,82 K | 1% MF | | |
| R 13 | 57.39.1501 | 1,5 K | 1% MF | | |
| R 14 | 57.39.2001 | 2 K | 1% MF | | |
| R 15 | 57.39.4751 | 4,75 K | 1% MF | | |
| R 16 | 57.11.4472 | 4,7 K | 5% | | |
| R 17 | 58.02.5471 | 470 Ω | 20% TRIMMER CF | | |
| R 18 | 57.39.8451 | 8450 Ω | 1% MF | | |
| ② R 19 | 57.39.3241 | 3,32 K | 1% MF | | |
| R 20 | 57.11.4682 | 6,8 K | 5% | | |

A: ATES
TI: TEXAS INSTR.

MF: METAL FILM
CF: CARBON FILM

| IND | DATE | NAME |
|---|---|---|
| ④ | | |
| ③ | | |
| ② | 12.2.80 | Tom |
| ① | 15.12.78 | Tom |
| 0 | 7.10.77 | Bellido |

STUDER — STEREO DECODER — 1.166.150.00 — PAGE 3 of 3

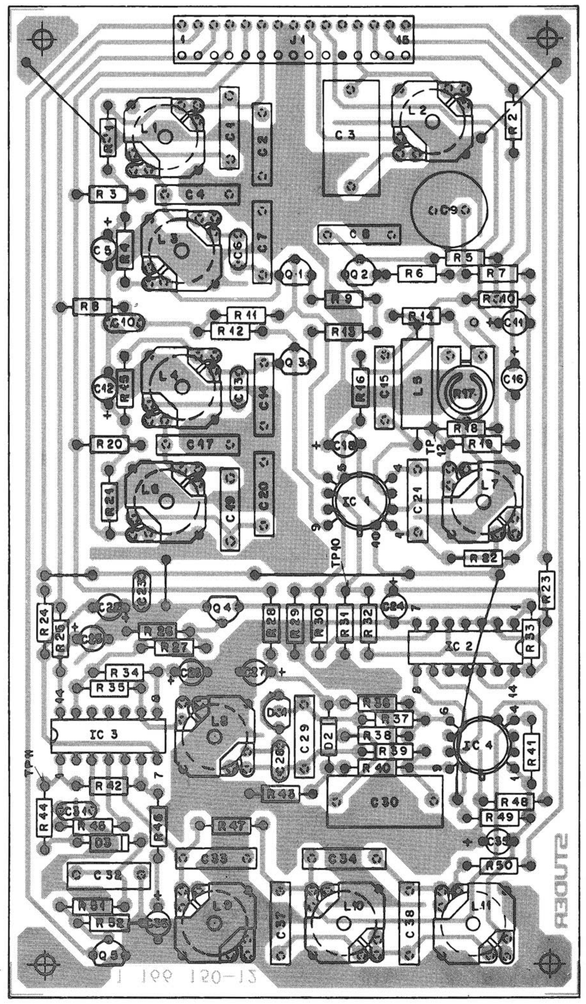

STEREO DECODER PCB 1.166 150

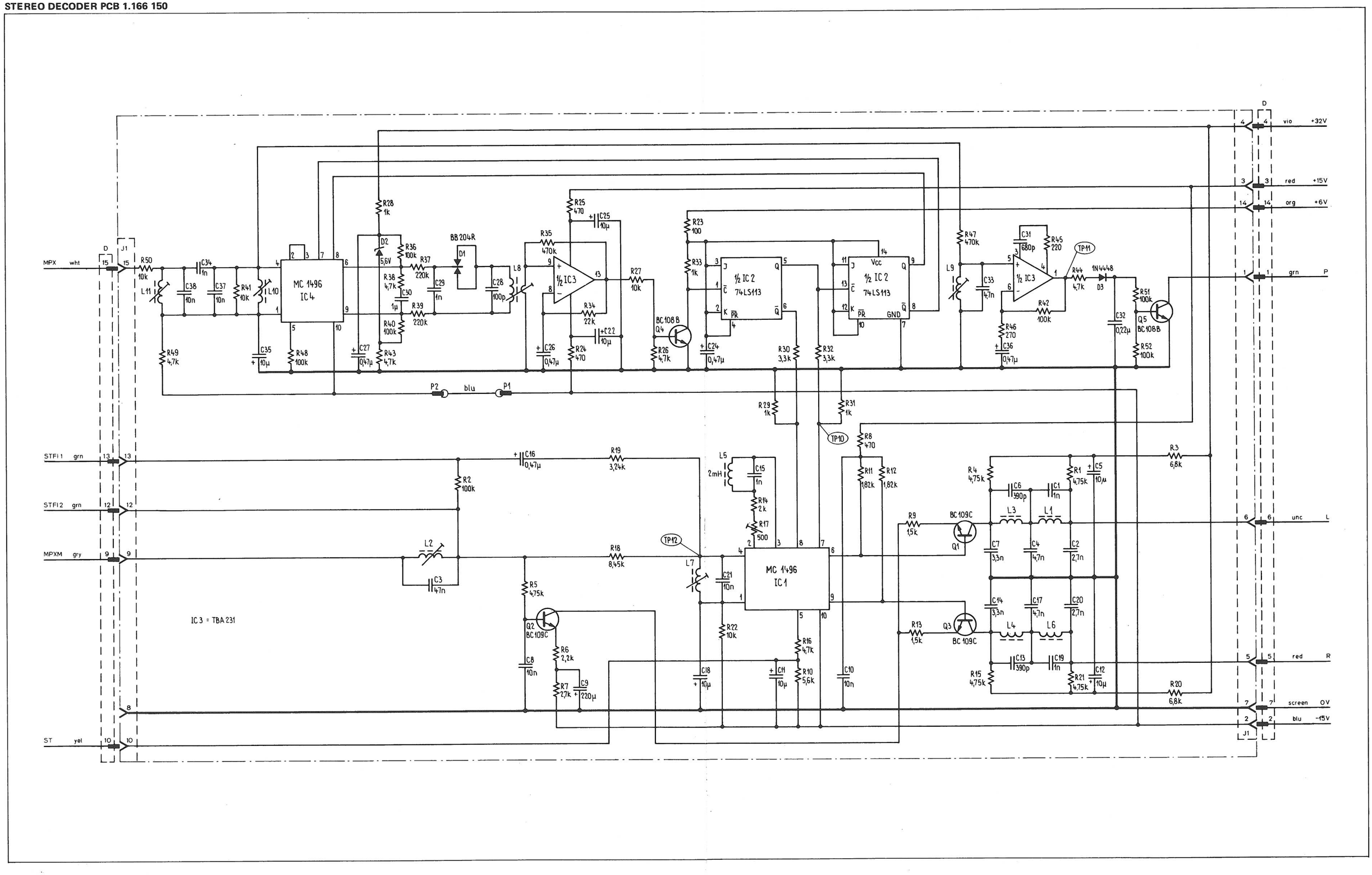

## AUDIO CONNECTION UNIT 1.780.145

| IND | POS NO | PART NO | VALUE | SPECIFICATIONS/EQUIVALENT | MFR |
|---|---|---|---|---|---|
| | C1..4 | 59.34.4221 | 220 pF | 20% 400V CER | |
| | C5 | 59.32.3103 | 10 nF | 80% 40V CER | |
| | C6 | 59.34.4221 | 220 pF | 20% 400V CER | |
| | C7 | 59.32.3103 | 10 nF | 80% 40V CER | |
| | C8,9 | 59.34.4221 | 220 pF | 20% 400V CER | |
| | C10 | 59.32.3103 | 10 nF | 80% 40V CER | |
| | C11 | 59.34.4221 | 220 pF | 20% 400V CER | |
| | C12 | 59.32.3103 | 10 nF | 80% 40V CER | |
| | C13 | 59.31.1105 | 1 µF | 20% 100V MPETP | |
| | C14 | 59.32.3103 | 10 nF | 80% 40V CER | |
| | C15 | 59.31.1105 | 1 µF | 20% 100V MPETP | |
| | C16,17 | 59.34.4221 | 220 pF | 20% 400V CER | |
| | C18..21 | 59.31.1105 | 1 µF | 20% 100V MPETP | |
| | C22,23 | 59.32.4101 | 100 pF | 20% 400V CER | |
| | C24 | 59.32.3103 | 10 nF | 80% 40V CER | |
| | C25 | 59.30.6339 | 3,3 µF | 20% 35V TA | |
| | C26..29 | 59.32.4102 | 1 nF | 20% 50V CER | |
| | C30,31 | 59.30.7100 | 10 µF | 20% 25V TA | |
| | C32 | 59.30.6339 | 3,3 µF | 20% 35V TA | |
| | C33 | 59.32.2221 | 220 µF | -10% 6,3V EL | |
| | C34 | 59.34.4101 | 100 pF | 5% 50V CER | |
| | C35,36 | 59.30.7100 | 10 µF | 20% 25V TA | |
| | C37 | 59.22.4101 | 100 µF | -10% 16V EL | |
| | C38 | 59.22.4102 | 1000 µF | -10% 16V EL | |
| | C39 | 59.12.4183 | 18 nF | 5% 100V MPETP | |
| | C40 | 59.11.3682 | 6,8 nF | " | |
| | C41 | 59.22.2221 | 220 µF | -10% 6,3V EL | |
| | C42 | 59.34.4101 | 100 pF | 5% 50V CER | |
| | C43,44 | 59.12.2224 | 0,22 µF | 5% 100V MPETP | |
| | C45,46 | 59.31.1105 | 1 µF | 20% 100V MPETP | |

| IND | DATE | NAME |
|---|---|---|
| ④ | | |
| ③ | | |
| ② | 16.1.80 | Ho |
| ① | 14.12.79 | R. |
| ○ | 31.5.79 | Ha |

CER : Ceramic
MPETP : Metallized Polyester
TA : Tantalum
EL : Electrolytic

STUDER AUDIO CONNECTION UNIT 1.780.145.00 PAGE 1 OF 4

| IND | POS NO | PART NO | VALUE | SPECIFICATIONS/EQUIVALENT | MFR |
|---|---|---|---|---|---|
| | C47,48 | 59.30.7100 | 10 µF | 20% 25V CER | |
| | C49 | 59.12.4183 | 18 nF | 5% 100V MPETP | |
| | C50 | 59.11.3682 | 6,8 nF | " | |
| | C51,52 | 59.32.3103 | 10 nF | 80% 40V CER | |
| | C53,54 | 59.12.2224 | 0,22 µF | 5% 100V MPETP | |
| | | | | | |
| | D1..12 | 50.04.0125 | 1N4448 | 100mA, 75V | |
| ② | | | | | |
| | | | | | |
| | IC1 | 50.05.0244 | TDA 1034NB | low noise opamp / NE 5534 AN | Philips |
| | IC2 | 50.11.0101 | TDA 1028 | low noise opamp, analog switch | " |
| | IC3 | 50.11.0102 | TDA 1029 | " | " |
| | IC4 | 50.11.0101 | TDA 1028 | " | " |
| | IC5 | 50.11.0102 | TDA 1029 | " | " |
| | IC6 | 50.05.0244 | TDA 1034NB | low noise opamp / NE 5534 AN | " |
| | IC7 | 50.05.0245 | RC 4558 P | dual opamp / RC 4558 DN | |
| | IC8 | 50.05.0266 | UA78MGC | voltage regulator 0,5A | Fairchild |
| | | | | | |
| | J1 | 54.01.0212 | 9 pole | CIS | AMP |
| | J2 | 54.01.0247 | 18 pole | " | " |
| | J3,4 | 54.02.0321 | 5 pole | Stereo DIN Mab 5SH | Hirschmann |
| | | | | | |
| | Q1,2 | 50.03.0436 | BC 237 B | 45V 300mA NPN / BC 107 B | |
| | | | | | |
| | R1 | 57.11.4102 | 1 kΩ | 5% 0,25W CF | |
| | R2 | 57.11.4105 | 1 MΩ | " | |
| | R3 | 57.11.4102 | 1 kΩ | " | |
| | R4 | 57.11.4105 | 1 MΩ | " | |
| | R5,6 | 57.11.4224 | 220 kΩ | " | |
| | R7,8 | 57.11.4102 | 1 kΩ | " | |

| IND | DATE | NAME |
|---|---|---|
| ④ | | |
| ③ | | |
| ② | 16.1.80 | Ho |
| ① | 14.12.79 | R. |
| ○ | 31.5.79 | Ha |

CF : Carbonfilm

STUDER AUDIO CONNECTION UNIT 1.780.145.00 PAGE 2 OF 4

| IND | POS NO | PART NO | VALUE | SPECIFICATIONS/EQUIVALENT | MFR |
|---|---|---|---|---|---|
| | R9 | 57.11.4105 | 1 MΩ | 5% 0,25W CF | |
| | R10,11 | 57.11.4102 | 1 kΩ | " | |
| | R12,13 | 57.11.4105 | 1 MΩ | " | |
| | R14,15 | 57.11.4102 | 1 kΩ | " | |
| | R16 | 57.11.4105 | 1 MΩ | " | |
| | R17,18 | 57.11.4102 | 1 kΩ | " | |
| | R19..22 | 57.11.4221 | 220 Ω | " | |
| | R23,24 | 57.11.4102 | 1 kΩ | " | |
| | R25,26 | 57.11.4104 | 100 kΩ | " | |
| | R27,28 | 57.11.4102 | 1 kΩ | " | |
| | R29,30 | 57.11.4563 | 56 kΩ | " | |
| | R31,32 | 57.11.4223 | 22 kΩ | " | |
| | R33..36 | 57.11.4563 | 56 kΩ | " | |
| | R37 | 57.11.4104 | 100 kΩ | " | |
| ② | R38 | 57.11.4331 | 330 Ω | " | |
| | R39,40 | 57.11.4223 | 22 kΩ | " | |
| | R41 | 57.11.4104 | 100 kΩ | " | |
| | R42 | 57.11.4123 | 12 kΩ | " | |
| | R43 | 57.11.4101 | 100 Ω | " | |
| | R44 | 57.11.4154 | 150 kΩ | " | |
| | R45 | 57.11.4222 | 2,2 kΩ | " | |
| | R46,47 | 57.11.4183 | 18 kΩ | " | |
| | R48 | 57.11.4222 | 2,2 kΩ | " | |
| | R49 | 57.39.1822 | 18,2 kΩ | 1% 0,25W MF | |
| | R50 | 57.39.5361 | 5,36 kΩ | " | |
| | R51..54 | 57.11.4473 | 47 kΩ | 5% 0,25W CF | |
| ② | R55 | 57.11.4272 | 2,7 kΩ | " | |
| | R56,57 | 57.11.4473 | 47 kΩ | " | |
| ② | R58 | 57.11.4272 | 2,7 kΩ | " | |
| | R59..62 | 57.11.4473 | 47 kΩ | " | |

| IND | DATE | NAME |
|---|---|---|
| ④ | | |
| ③ | | |
| ② | 16.1.80 | Ho |
| ① | 14.12.79 | R. |
| ○ | 31.5.79 | Ha |

MF : Metalfilm

STUDER AUDIO CONNECTION UNIT 1.780.145.00 PAGE 3 OF 4

| IND | POS NO | PART NO | VALUE | SPECIFICATIONS/EQUIVALENT | MFR |
|---|---|---|---|---|---|
| | R63 | 57.11.4123 | 12 kΩ | 5% 0,25W CF | |
| | R64 | 57.11.4101 | 100 Ω | " | |
| | R65 | 57.11.4154 | 150 kΩ | " | |
| ② | R66 | 57.11.4331 | 330 Ω | " | |
| | R67,68 | 57.11.4152 | 1,5 kΩ | " | |
| | | | | | |
| | S1 | 55.01.0306 | | Mabso 2H-UU Hirschmann | |

| IND | DATE | NAME |
|---|---|---|
| ④ | | |
| ③ | | |
| ② | 28.1.80 | Ha |
| ① | | |
| ○ | 31.5.79 | Ha |

STUDER AUDIO CONNECTION UNIT 1.780.145.00 PAGE 4 OF 4

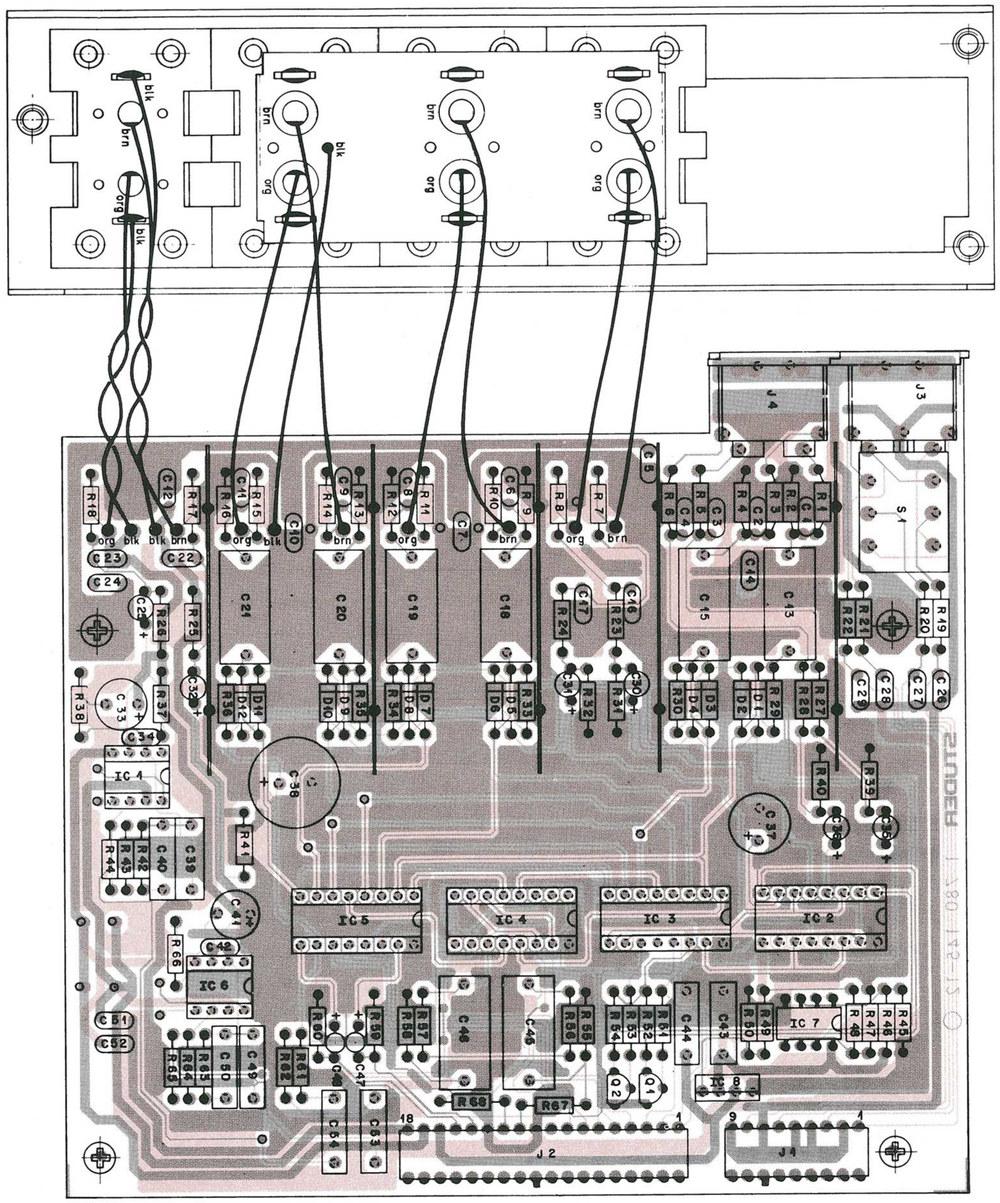

**AUDIO CONNECTION UNIT 1.780.145**

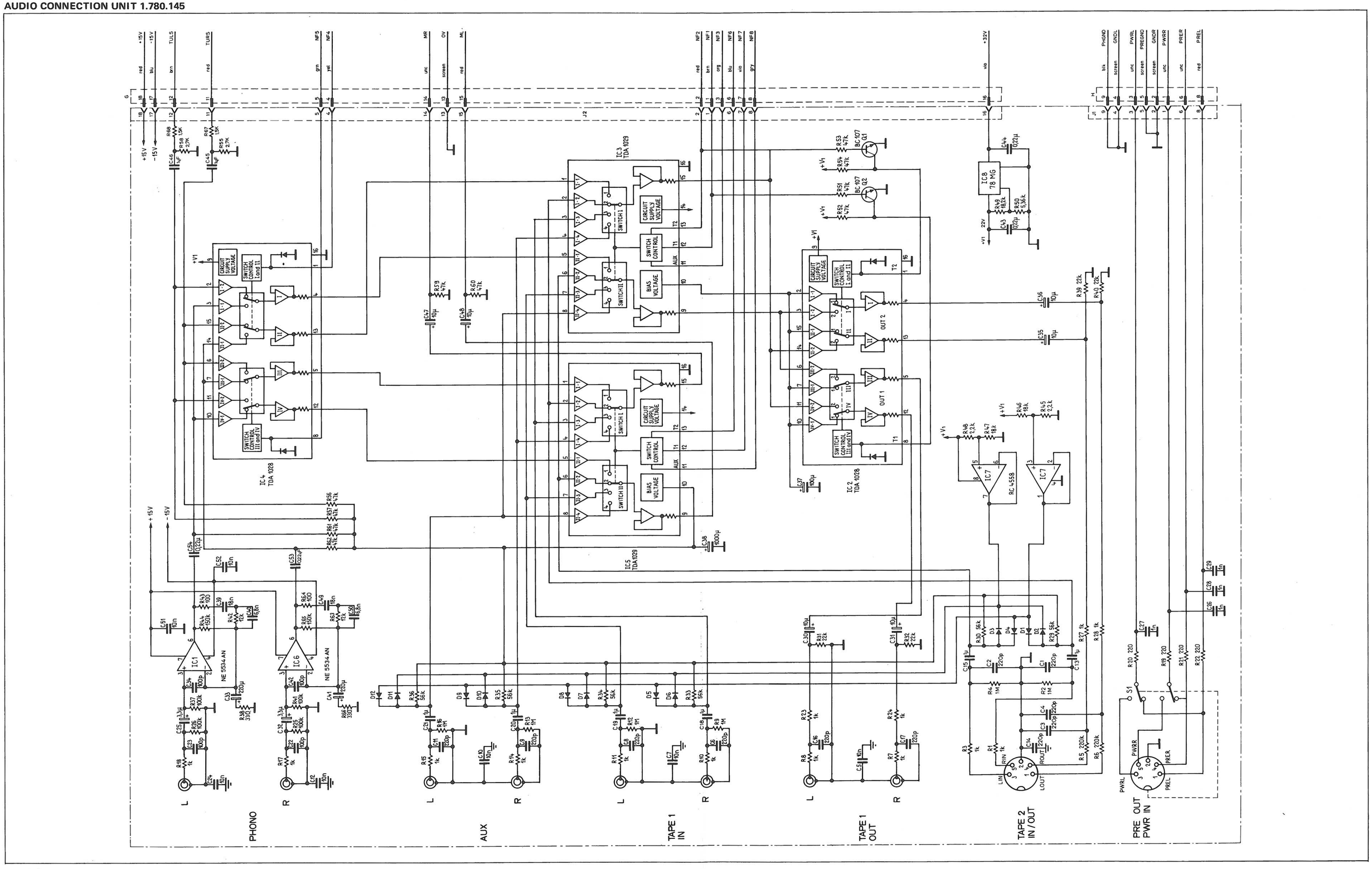

## PREAMPLIFIER PCB 1.780.205

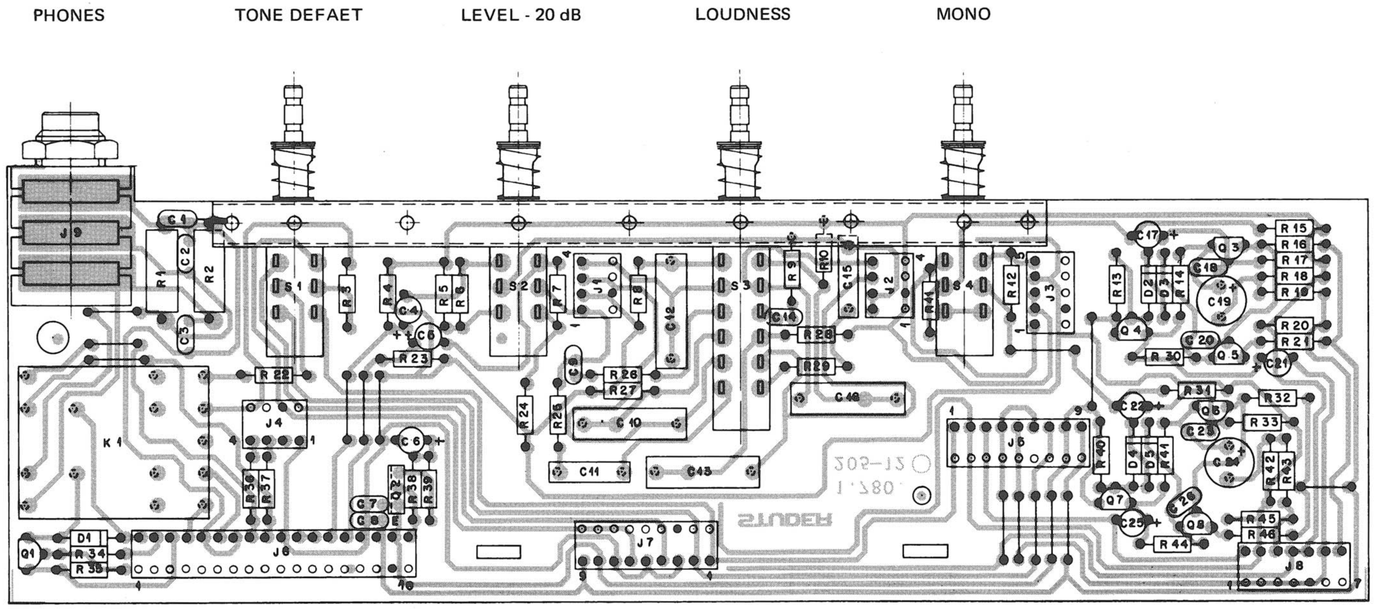


| IND | POS NO | PART NO | VALUE | SPECIFICATIONS/EQUIVALENT | MFR |
|---|---|---|---|---|---|
| | C1 | 59.32.3102 | 10 nF | 80% 50V CER | |
| | C2,3 | 59.32.4102 | 1 nF | 20% 50V CER | |
| | C4...C6 | 59.30.4220 | 22 µF | 20% 16V TA | |
| | C7,8 | 59.32.3103 | 10 nF | 80% 50V CER | |
| | C9 | 59.32.2681 | 680 pF | 10% 50V CER | |
| 1 | C10 | 59.31.6474 | 0,47 µF | 10% 100V MPETP | |
| | C11 | 59.11.6222 | 2,2 nF | " | |
| 1 | C12,13 | 59.31.6474 | 0,47 µF | " | |
| | C14 | 59.32.2681 | 680 pF | 10% 50V CER | |
| | C15 | 59.11.6222 | 2,2 nF | 10% 100V MPETP | |
| 1 | C16 | 59.31.6474 | 0,47 µF | " | |
| | C17 | 59.30.6109 | 1 µF | 20% 35V TA | |
| | C18 | 59.32.2681 | 680 pF | 10% 50V CER | |
| | C19 | 59.22.5470 | 47 µF | -10% 25V EL | |
| | C20 | 59.34.2220 | 22 pF | 5% 50V CER | |
| | C21 | 59.30.4220 | 22 µF | 20% 16V TA | |
| | C22 | 59.30.6109 | 1 µF | 20% 35V TA | |
| | C23 | 59.32.2681 | 680 pF | 10% 50V CER | |
| | C24 | 59.22.5470 | 47 µF | -10% 25V EL | |
| | C25 | 59.30.4220 | 22 µF | 20% 16V TA | |
| | C26 | 59.34.2220 | 22 pF | 5% 50V CER | |
| | | | | | |
| | D1...5 | 50.04.0125 | 1N4448 | 100 mA 75V | |
| | | | | | |
| | J1,2 | 54.01.0241 | 4 pole | CIS | AMP |
| | J3 | 54.01.0288 | 5 pole | " | " |
| | J4 | 54.01.0241 | 4 pole | " | " |
| | J5 | 54.01.0217 | 9 pole | " | " |
| | J6 | 54.01.0236 | 18 pole | " | " |
| | J7 | 54.01.0217 | 9 pole | " | " |

| IND | DATE | NAME |
|---|---|---|
| 4 | | |
| 3 | | |
| 2 | | |
| 1 | 5.3.80 | Rom |
| 0 | 13.6.79 | Hle |

CER : Ceramic
TA : Tantalum
MPETP : Metallized Polyester
EL : Electrolytic

STUDER PREAMPLIFIER 1.780.205.00 PAGE 1 OF 3

| IND | POS NO | PART NO | VALUE | SPECIFICATIONS/EQUIVALENT | MFR |
|---|---|---|---|---|---|
| | J8 | 54.01.0218 | 7 pole | CIS | AMP |
| | J9 | 54.02.0104 | | 3 pole Jack 6,3 mm | |
| | | | | | |
| | K1 | 56.04.0141 | 24V; 1,2kΩ | AE 1354 6500 T | National |
| | | | | | |
| | Q1 | 50.03.0436 | BC237 B | NPN / BC 107 | |
| | Q2 | 50.03.0478 | 2SC496-0 | NPN / BD 139 | |
| | Q3 | 50.03.0436 | BC560C | low noise PNP / BC 179 B | |
| | Q4,5 | 50.03.0437 | BC550C | " NPN / BC 107 B | |
| | Q6 | 50.03.0436 | BC560C | " PNP / BC 179 B | |
| | Q7,8 | 50.03.0437 | BC550C | " NPN / BC 107 B | |
| | | | | | |
| | R1,2 | 57.43.4471 | 470 Ω | 5% 0,5W CF | |
| | R3 | 57.11.4101 | 100 Ω | 5% 0,25W CF | |
| | R4 | 57.11.4563 | 56 kΩ | " | |
| | R5 | 57.39.2611 | 2,61 kΩ | 1% 0,25W MF | |
| | R6,7 | 57.39.2052 | 20,5 kΩ | " | |
| | R8 | 57.11.4152 | 1,5 kΩ | 5% 0,25W CF | |
| | R9 | 57.11.4563 | 56 kΩ | " | |
| | R10 | 57.11.4152 | 1,5 kΩ | " | |
| | R11,12 | 57.11.4102 | 1 kΩ | " | |
| | R13 | 57.11.4563 | 56 kΩ | " | |
| | R14 | 57.11.4822 | 8,2 kΩ | " | |
| | R15 | 57.11.4224 | 220 kΩ | " | |
| | R16 | 57.11.4153 | 15 kΩ | " | |
| | R17 | 57.11.4224 | 220 kΩ | " | |
| | R18 | 57.11.4152 | 1,5 kΩ | " | |
| | R19 | 57.11.4272 | 2,7 kΩ | " | |
| | R20 | 57.11.4222 | 2,2 kΩ | " | |
| | R21 | 57.11.4470 | 47 Ω | " | |

| IND | DATE | NAME |
|---|---|---|
| 4 | | |
| 3 | | |
| 2 | | |
| 1 | 5.3.80 | Rom |
| 0 | 13.6.79 | Hle |

CF : Carbonfilm
MF : Metalfilm

STUDER PREAMPLIFIER 1.780.205.00 PAGE 2 OF 3

| IND | POS NO | PART NO | VALUE | SPECIFICATIONS/EQUIVALENT | MFR |
|---|---|---|---|---|---|
| | R22 | 57.11.4101 | 100 Ω | 5% 0,25W CF | |
| | R23 | 57.11.4563 | 56 kΩ | " | |
| | R24 | 57.39.2611 | 2,61 kΩ | 1% 0,25W MF | |
| | R25 | 57.11.4562 | 5,6 kΩ | 5% 0,25W CF | |
| | R26 | 57.11.4563 | 56 kΩ | " | |
| | R27,28 | 57.11.4332 | 3,3 kΩ | " | |
| | R29 | 57.11.4562 | 5,6 kΩ | " | |
| | R30 | 57.11.4101 | 100 Ω | " | |
| | R31 | 57.11.4224 | 220 kΩ | " | |
| | R32 | 57.11.4153 | 15 kΩ | " | |
| | R33 | 57.11.4224 | 220 kΩ | " | |
| | R34 | 57.11.4153 | 15 kΩ | " | |
| | R35 | 57.11.4822 | 8,2 kΩ | " | |
| | R36...38 | 57.11.4222 | 2,2 kΩ | " | |
| | R39 | 57.11.4331 | 330 Ω | " | |
| | R40 | 57.11.4563 | 56 kΩ | " | |
| | R41 | 57.11.4822 | 8,2 kΩ | " | |
| | R42 | 57.11.4152 | 1,5 kΩ | " | |
| | R43 | 57.11.4272 | 2,7 kΩ | " | |
| | R44 | 57.11.4101 | 100 Ω | " | |
| | R45 | 57.11.4222 | 2,2 kΩ | " | |
| | R46 | 57.11.4470 | 47 Ω | " | |
| | | | | | |
| | S1...4 | 1.780.205.01 | | | |

| IND | DATE | NAME |
|---|---|---|
| 4 | | |
| 3 | | |
| 2 | | |
| 1 | 5.3.80 | Rom |
| 0 | 13.6.79 | Hle |

STUDER PREAMPLIFIER 1.780.205.00 PAGE 3 OF 3

FILTER PCB 1.780.215.-81

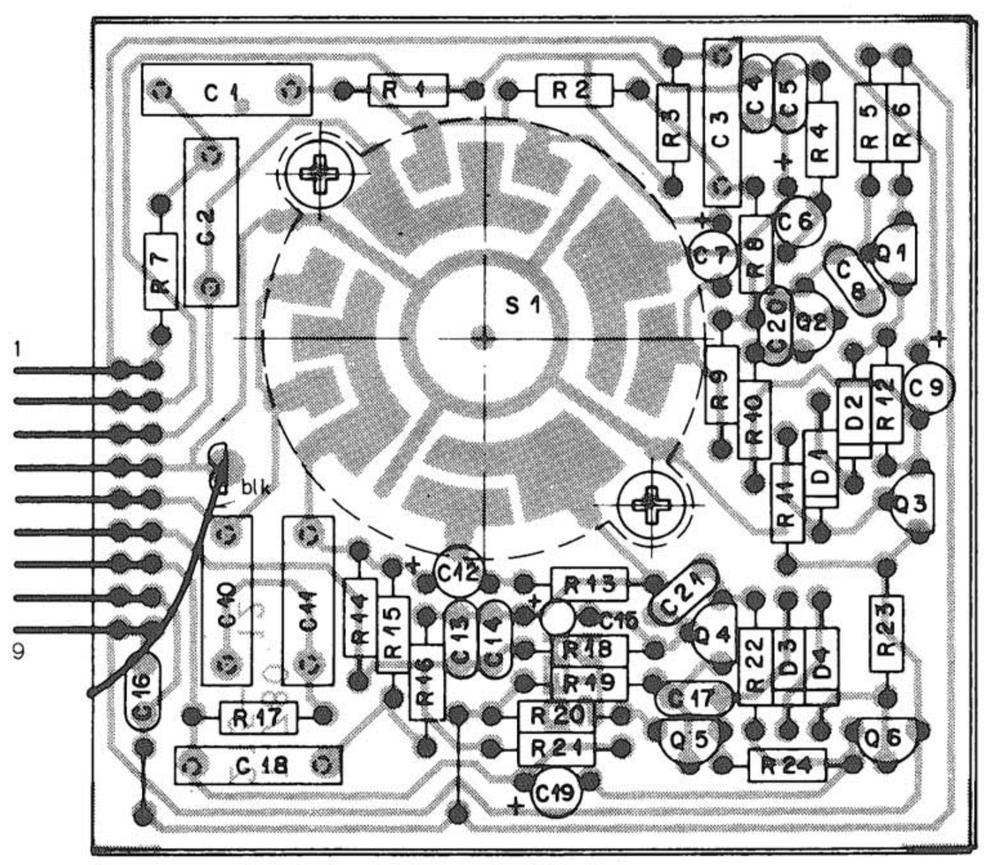




www.hifiengine.com

## FILTER PCB 1.780.215 - 81

| IND | POS NO | PART NO | VALUE | SPECIFICATIONS/EQUIVALENT | MFR |
|---|---|---|---|---|---|
| 2 | C1,C2 | 59.12.2154 | 0,15 µF | 5% , 100 V , MPETP | |
| | C3 | 59.11.6102 | 1,0 nF | 5% , 400 V , PC | |
| | C4 | 59.34.5471 | 470 pF | 5% , 50 V , CER | |
| | C5 | 59.34.2270 | 27 pF | 5% , 50 V , CER | |
| | C6,C7 | 59.30.6109 | 1 µF | 20% , 35 V , TA | |
| | C8 | 59.34.2330 | 33 pF | 5% , 50 V , CER | |
| | C9 | 59.30.3330 | 33 µF | 20% , 10 V , TA | |
| 2 | C10,C11 | 59.12.2154 | 0,15 µF | 5% , 100 V , MPETP | |
| | C12 | 59.30.6109 | 1 µF | 20% , 35 V , TA | |
| | C13 | 59.34.5471 | 470 pF | 5% , 50 V , CER | |
| | C14 | 59.34.2270 | 27 pF | 5% , 50 V , CER | |
| | C15 | 59.30.6109 | 1 µF | 20% , 35 V , TA | |
| | C16 | 59.32.3103 | 10 nF | 80% , 40 V , CER | |
| | C17 | 59.34.2330 | 33 pF | 5% , 50 V , CER | |
| | C18 | 59.11.6102 | 1,0 nF | 5% , 400 V , PC | |
| | C19 | 59.30.3330 | 33 µF | 20% , 10 V , TA | |
| 1 | C20,21 | 59.32.2681 | 680 pF | 10% , 50 V , CER | |
| | D1...D4 | 50.04.0125 | 1N4448 | 100 mA , 75 V , | |
| | | | | | |
| 1 | Q1 | 50.03.0496 | BC 560 C | low noise 45V PNP | |
| 1 | Q2 | 50.03.0497 | BC 550 C | low noise 45V NPN | |
| 1 | Q3 | 50.03.0496 | BC 560 C | | |
| 1 | Q4 | 50.03.0497 | BC 550 C | | |
| 1 | Q5,Q6 | 50.03.049 | BC 560 C | | |
| | | | | | |
| | R1 | 57.39.1053 | 105 kΩ | 1% 0,25 W MF | |
| | R2 | 57.39.2802 | 28 kΩ | " | |
| | R3 | 57.11.4103 | 10 KΩ | 5% 0,25 W CF | |
| | R4 | 57.11.4105 | 1 MΩ | " | |
| | R5 | 57.11.4153 | 15 kΩ | " | |

| IND | DATE | NAME |
|---|---|---|
| ④ | | |
| ③ | | |
| ② | 26.8.80 | Ha 81 |
| ① | 10.7.80 | Pom. |
| ○ | 29.5.79 | Ha |

MPETP : Metallized Polyester CF : Carbonfilm
PC : Polycarbonate
CER : Ceramic
TA : Tantalum
MF : Metalfilm

STUDER FILTER 1.780.215.81 PAGE 1 OF 2

| IND | POS NO | PART NO | VALUE | SPECIFICATIONS/EQUIVALENT | MFR |
|---|---|---|---|---|---|
| | R6 | 57.11.4470 | 47 Ω | 5% 0,25 W CF | |
| | R7 | 57.11.4473 | 47 kΩ | " | |
| | R8 | 57.39.2802 | 28 kΩ | 1% 0,25 W MF | |
| | R9 | 57.11.4105 | 1 MΩ | 5% 0,25 W CF | |
| | R10 | 57.11.4102 | 1 kΩ | " | |
| | R11 | 57.11.4563 | 56 kΩ | " | |
| | R12 | 57.11.4101 | 100 Ω | " | |
| | R13 | 57.11.4105 | 1 MΩ | " | |
| | R14 | 57.39.1053 | 105 kΩ | 1% 0,25 W MF | |
| | R15,R16 | 57.39.2802 | 28 kΩ | " | |
| | R17 | 57.11.4473 | 47 kΩ | 5% 0,25 W CF | |
| | R18 | 57.11.4105 | 1 MΩ | " | |
| | R19 | 57.11.4153 | 15 kΩ | " | |
| | R20 | 57.11.4470 | 47 Ω | " | |
| | R21 | 57.11.4103 | 10 kΩ | " | |
| | R22 | 57.11.4102 | 1 kΩ | " | |
| | R23 | 57.11.4563 | 56 kΩ | " | |
| | R24 | 57.11.4101 | 100 Ω | " | |
| | | | | | |
| | S1 | 1.011.307.00 | | | |

| IND | DATE | NAME |
|---|---|---|
| ④ | | |
| ③ | | |
| ② | 26.8.80 | Ha 81 |
| ① | 10.7.80 | Pom. |
| ○ | 29.5.79 | Ha |

STUDER FILTER 1.780.215.81 PAGE 2 OF 2



www.hifiengine.com

**PREAMPLIFIER PCB 1.780.205 / FILTER PCB 1.780.215 - 81**

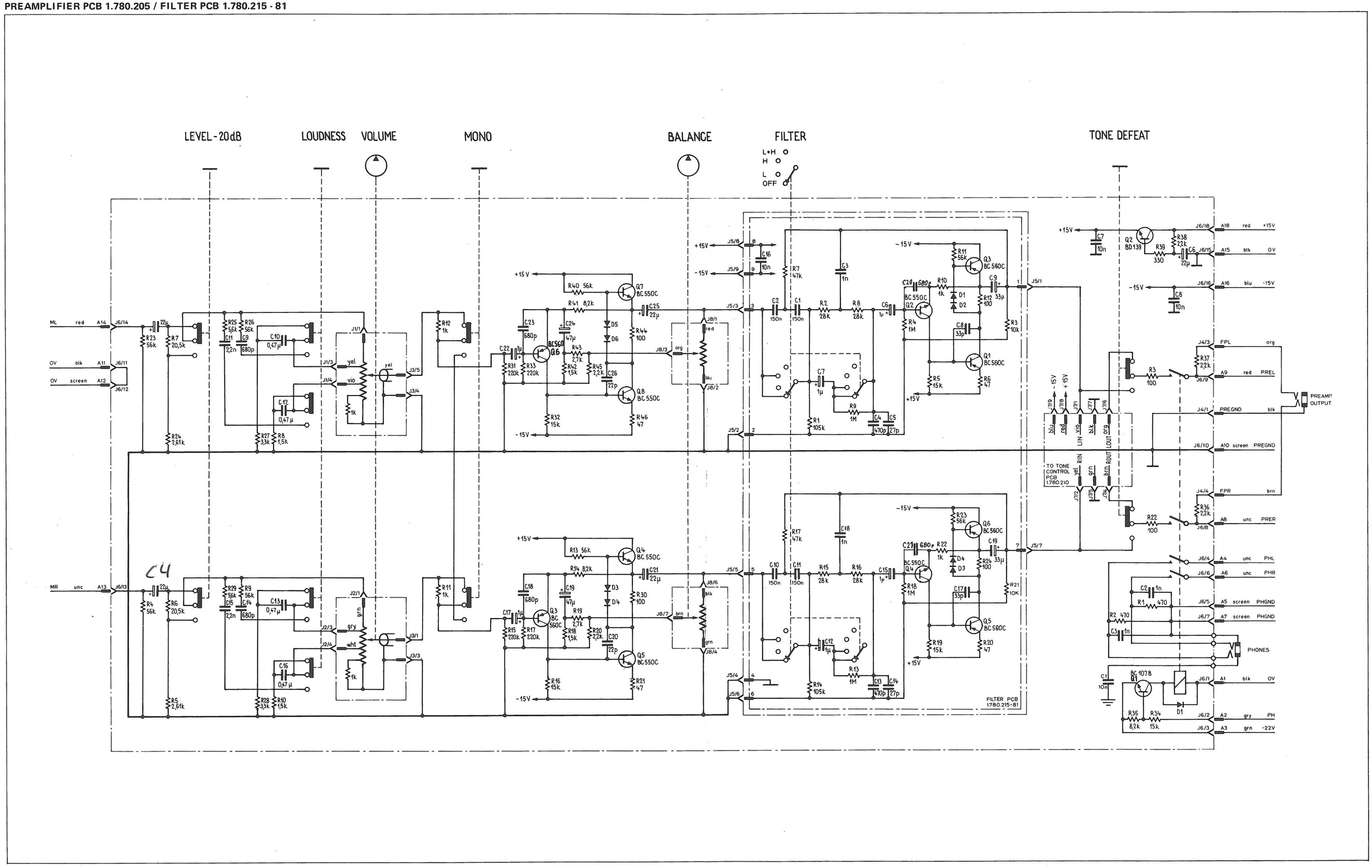

## TONE CONTROL PCB 1.780.210

| IND | POS NO | PART NO | VALUE | SPECIFICATIONS/EQUIVALENT | MFR |
|---|---|---|---|---|---|
| | C1, C2 | 59.32.3103 | 10 nF | 80% 40V CER | |
| | C3, C4 | 59.12.2154 | 0,15 µF | 5% 100V MPETP | |
| | C5 | 59.12.4472 | 4,7 nF | " | |
| | C6 | 59.12.2123 | 12 nF | " | |
| | C7, C8 | 59.12.2154 | 0,15 µF | " | |
| | C9 | 59.12.4472 | 4,7 nF | " | |
| | C10 | 59.12.4103 | 10 nF | " | |
| | C11 | 59.12.2123 | 12 nF | " | |
| | C12 | 59.12.4103 | 10 nF | " | |
| | C13 | 59.30.6478 | 0,47 µF | 20% 16V TA | |
| | C14 | 59.30.4220 | 22 µF | " | |
| | C15 | 59.30.6478 | 0,47 µF | " | |
| | C16 | 59.30.4220 | 22 µF | " | |
| | C17 | 59.30.6478 | 0,47 µF | " | |
| | C18 | 59.30.4220 | 22 µF | " | |
| | C19 | 59.30.6478 | 0,47 µF | " | |
| | C20 | 59.30.4220 | 22 µF | " | |
| | C21, C24 | 59.34.2470 | 47 pF | 5% 50V CER | |
| | C25 | 59.32.3103 | 10 nF | 80% 40V CER | |
| ② | | | | | |
| ② | C28, 29 | 59.34.4151 | 150 pF | | |
| | D1..D8 | 50.04.0125 | 1N4148 | 100 mA 75 V | |
| | Q1, Q2 | 50.03.0497 | BC550C | low noise 45 V NPN / BC107B | |
| | Q3..Q10 | 50.03.0496 | BC560C | " 25 V PNP / BC179B | |
| | Q11..Q14 | 50.03.0497 | BC550C | | |
| | R1 | 57.11.4822 | 8,2 kΩ | 5% 0,25W CF | |
| | R2, R3 | 1.780.210.02 | 2x 47 kΩ | Potentiometer lin | |
| | R4 | 57.11.4822 | 8,2 kΩ | 5% 0,25W CF | |
| | R5 | 57.11.4152 | 1,5 kΩ | " | |

| IND | DATE | NAME | |
|---|---|---|---|
| ④ | | | MPETP : Metallized Polyester |
| ③ | | | CER : Ceramic |
| ② | 17.3.80 | Rom | TA : Tantalum |
| ① | 22.10.79 | Ho | CF : Carbonfilm |
| ○ | 29.5.79 | He | |

STUDER | TONE CONTROL | 1.780.210.00 | PAGE 1 OF 3

| IND | POS NO | PART NO | VALUE | SPECIFICATIONS/EQUIVALENT | MFR |
|---|---|---|---|---|---|
| | R6, R7 | 1.780.210.03 | 2x 10 kΩ | Potentiometer lin | |
| | R8 | 57.39.5231 | 5,23 kΩ | 1% 0,25W MF | |
| | R9, 10 | 57.11.4682 | 6,8 kΩ | 5% 0,25W CF | |
| | R11 | 57.39.4531 | 4,53 kΩ | 1% 0,25W MF | |
| | R12, 13 | 1.780.210.01 | 2x 4,7 kΩ | Potentiometer lin | |
| | R14, 15 | 57.11.4822 | 8,2 kΩ | 5% 0,25W CF | |
| | R16 | 57.11.4152 | 1,5 kΩ | " | |
| | R17 | 57.11.4682 | 6,8 kΩ | " | |
| | R18 | 57.39.5231 | 5,23 kΩ | 1% 0,25W MF | |
| | R19 | 57.39.4531 | 4,53 kΩ | " | |
| | R20 | 57.11.4682 | 6,8 kΩ | 5% 0,25W CF | |
| | R21, 22 | 57.11.4103 | 10 kΩ | " | |
| | R23 | 57.11.4182 | 1,8 kΩ | " | |
| | R24 | 57.11.4470 | 47 Ω | " | |
| | R25 | 57.11.4105 | 1 MΩ | " | |
| | R26 | 57.11.4182 | 1,8 kΩ | " | |
| | R27 | 57.11.4470 | 47 Ω | " | |
| | R28, 30 | 57.11.4103 | 10 kΩ | " | |
| | R31, 32 | 57.11.4470 | 47 Ω | " | |
| | R33 | 57.11.4183 | 18 kΩ | " | |
| | R34 | 57.11.4563 | 56 kΩ | " | |
| | R35 | 57.11.4105 | 1 MΩ | " | |
| | R36 | 57.11.4182 | 1,8 kΩ | " | |
| | R37, 38 | 57.11.4470 | 47 Ω | " | |
| | R39 | 57.11.4183 | 18 kΩ | " | |
| | R40 | 57.11.4563 | 56 kΩ | " | |
| | R41 | 57.11.4105 | 1 MΩ | " | |
| | R42 | 57.11.4182 | 1,8 kΩ | " | |
| | R43 | 57.11.4105 | 1 MΩ | " | |
| | R44..46 | 57.11.4101 | 100 Ω | " | |

| IND | DATE | NAME | |
|---|---|---|---|
| ④ | | | MF : Metalfilm |
| ③ | | | |
| ② | 17.3.80 | Rom | |
| ① | 22.10.79 | Ho | |
| ○ | 29.5.79 | He | |

STUDER | TONE CONTROL | 1.780.210.00 | PAGE 2 OF 3

| IND | POS NO | PART NO | VALUE | SPECIFICATIONS/EQUIVALENT | MFR |
|---|---|---|---|---|---|
| | R47 | 57.11.4470 | 47 Ω | 5% 0,25W CF | |
| | R48 | 57.11.4101 | 100 Ω | " | |
| | R49, 51 | 57.11.4470 | 47 Ω | " | |
| | R52 | 57.11.4183 | 18 kΩ | " | |
| | R53 | 57.11.4563 | 56 kΩ | " | |
| | R54, 55 | 57.11.4470 | 47 Ω | " | |
| | R56 | 57.11.4183 | 18 kΩ | " | |
| | R57 | 57.11.4563 | 56 kΩ | " | |

| IND | DATE | NAME | |
|---|---|---|---|
| ④ | | | |
| ③ | | | |
| ② | 17.3.80 | Rom | |
| ① | 22.10.79 | Ho | |
| ○ | 29.5.79 | He | |

STUDER | TONE CONTROL | 1.780.210.00 | PAGE 3 OF 3

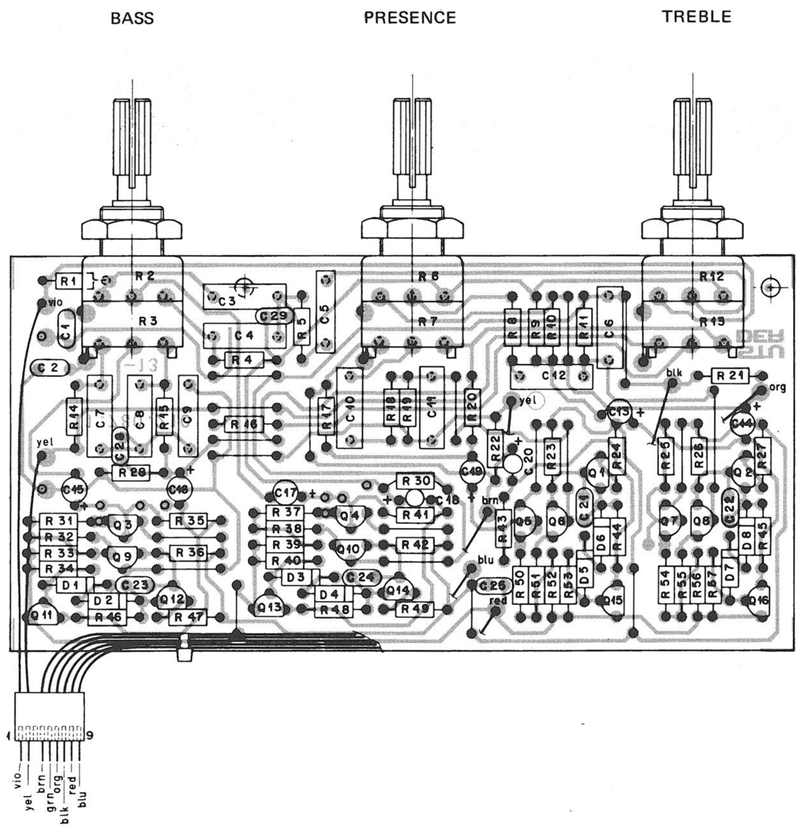

TONE CONTROL PCB 1.780.210

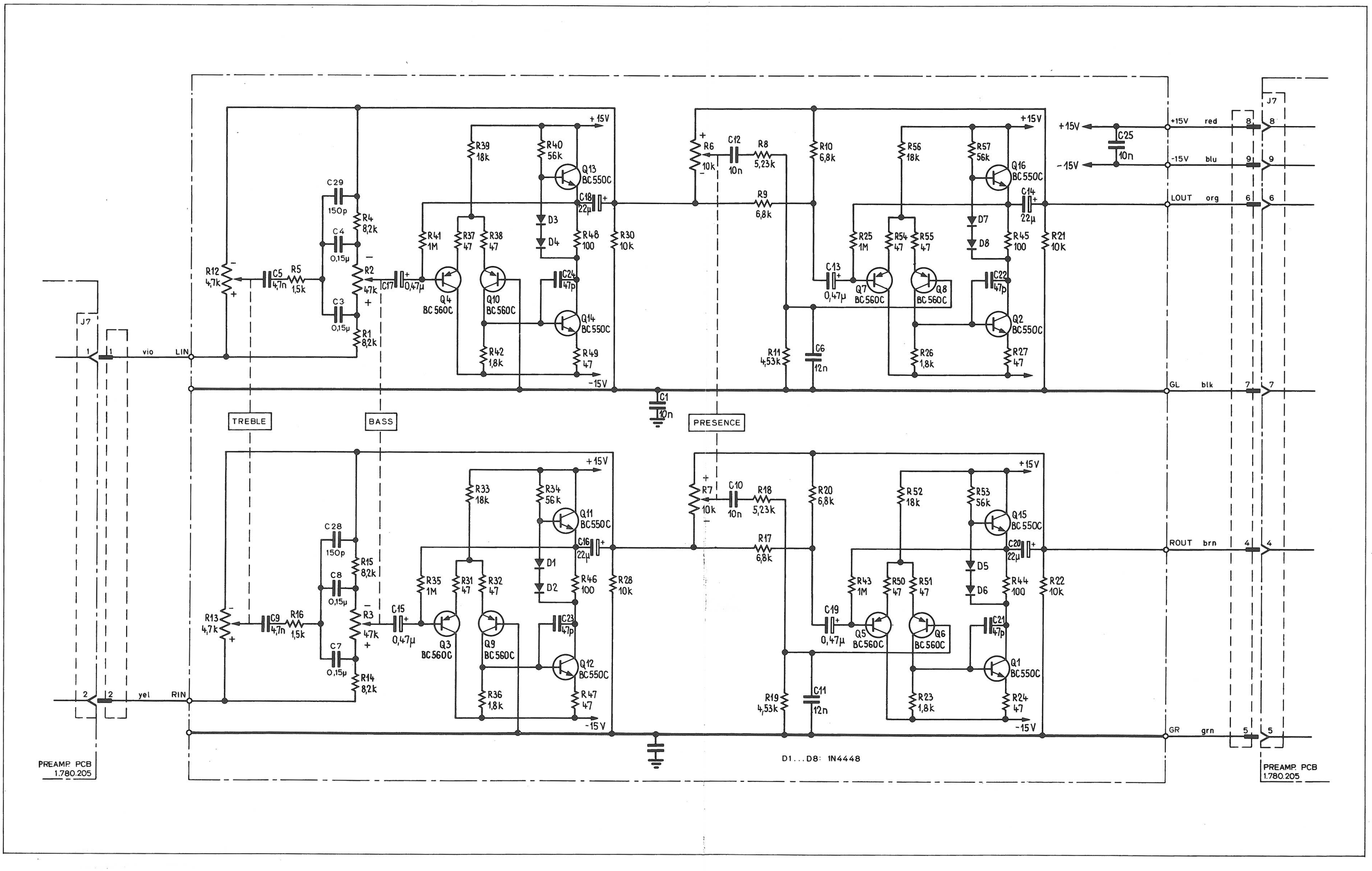

## POWER AMPLIFIER PCB 1.780.105

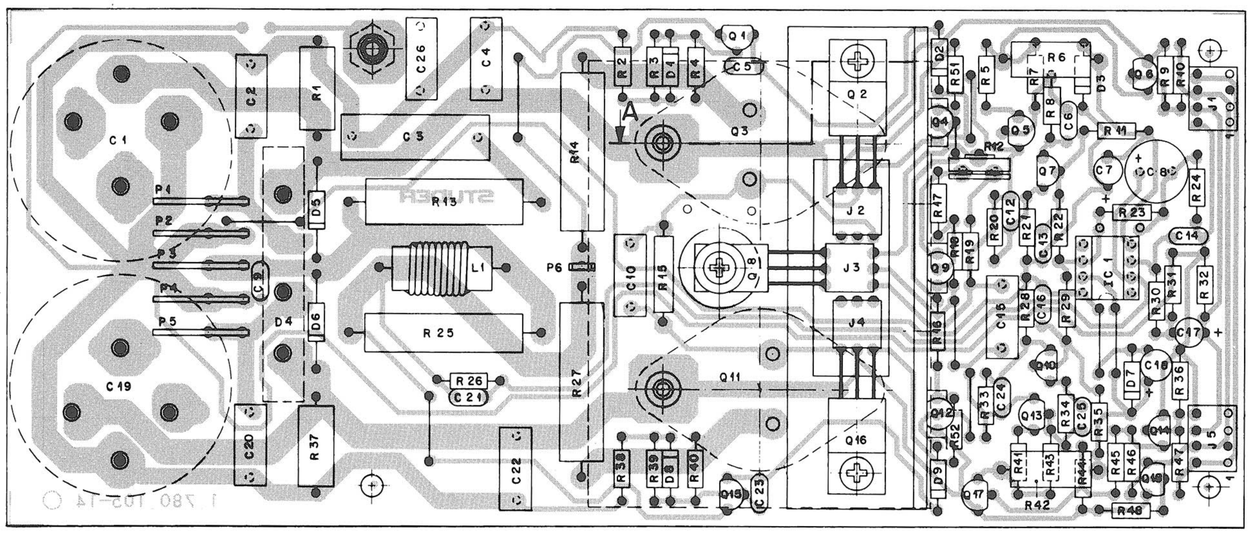


| IND | POS NO | PART NO | VALUE | SPECIFICATIONS/EQUIVALENT | MFR |
|---|---|---|---|---|---|
| | C 1 | 53.35.6472 | 4,7 nF | -10% 63V EL | |
| | C 2 | 53.31.1224 | 0,22 µF | 20% 100V MPETP | |
| | C 3 | 53.33.0453 | 0,1 µF | 10% 250V MP | |
| | C 4 | 53.31.1224 | 0,22 µF | 20% 100V MPETP | |
| | C 5 | 53.32.2472 | 4,7 nF | 10% 50V CER | |
| | C 6 | 53.34.4221 | 220 pF | 5% 50V CER | |
| ⑦ | C 7 | 53.22.5220 | 22 µF | 20% 25V EL | |
| | C 8 | 53.22.2221 | 220 µF | -10% 6,3V EL | |
| | C 9 | 53.32.6222 | 2,2 nF | 20% 500V CER | |
| ③ | C 10 | 53.31.1224 | 0,22 µF | 20% 100V MPETP | |
| | C 12 | 53.34.4151 | 150 pF | 5% 50V CER | |
| | C 13 | 53.34.4271 | 270 pF | " | |
| | C 14 | 53.32.0561 | 560 pF | 20% 500V CER | |
| | C 15 | 53.31.0334 | 0,33 µF | 20% 63V MPETP | |
| | C 16 | 53.34.4271 | 270 pF | 5% 50V CER | |
| | C 17 | 53.30.6339 | 3,3 µF | 20% 35V TA | |
| ⑦ | C 18 | 53.22.5220 | 22 µF | 20% 25V EL | |
| | C 19 | 53.35.6472 | 4,7 nF | -10% 63V EL | |
| | C 20 | 53.31.1224 | 0,22 µF | 20% 100V MPETP | |
| | C 21 | 53.34.2330 | 4,7 nF | 10% 50V CER | |
| | C 22 | 53.31.1224 | 0,22 µF | 20% 100V MPETP | |
| | C 23 | 53.32.2472 | 4,7 nF | 10% 50V CER | |
| | C 24 | 53.34.4151 | 150 pF | 5% 50V CER | |
| | C 25 | 53.34.4221 | 220 pF | " | |
| 1 | C 26 | | | | |
| | D1,D2 | 50.04.0125 | 1N4448 | 100mA 75V | |
| | D3 | 50.04.1119 | BZX 15V | 15V, 5% 400mW | |
| 6 | D4 | 50.04.0235 | BDC3700 | 50V, 3,7A | |
| | D5,6 | 50.04.0105 | 1N4004 | 200V 1A | |
| | D7 | 50.04.1119 | BZX 15V | 15V, 5% 400mW | |

| IND | DATE | NAME |
|---|---|---|
| ⑤ | 6.5.80 | Ho |
| ⑥ | 2.7.80 | Rem. |
| ⑦ | 2.7.81 | Sel. |
| ⑧ | | |
| ○ | 5.6.79 | Ke |

EL : Electrolytic
MPETP : Metallized Polyester
MP : Metallized Paper
CER : Ceramic
TA : Tantalum

STUDER POWER AMPLIFIER 1.780.105.00 PAGE 1 OF 4

| IND | POS NO | PART NO | VALUE | SPECIFICATIONS/EQUIVALENT | MFR |
|---|---|---|---|---|---|
| | D1,D3 | 50.04.0125 | 1N4448 | 100mA 75V | |
| ⑤ | IC 1 | 1.010.035.50 | LF 357 P | slew rate min: 30V/µs | National |
| | J 1 | 54.01.0241 | 4 pole | CIS | AMP |
| | J2..3 | 54.01.0243 | 3 pole | " | " |
| | J 5 | 54.01.0241 | 4 pole | " | " |
| | | | | | |
| | L 1 | 1.018.614.00 | 2,2 µH | | |
| | | | | | |
| | Q 1 | 50.03.0318 | BC 308 B | 300mA 24V PNP / BC 178 B | |
| | Q 2 | 50.03.0501 | 2N6476 | PNP / 2SB 703 A | RCA |
| | Q 3 | 50.03.0343 | 2N6031 | PNP | M |
| | Q 4 | 50.03.0485 | MPSA92 | PNP | M |
| | Q 5,6 | 50.03.0484 | MPSA42 | NPN | M |
| | Q 7 | 50.03.0492 | BC 256 B | PNP / BC 266 B | |
| | Q 8 | 50.03.0478 | 2SC 431-0 | NPN / BD 139 | |
| | Q 9 | 50.03.0484 | MPSA42 | NPN | M |
| | Q 10 | 50.03.0491 | BC 174 B | NPN / BC 190 B | |
| | Q 11 | 50.03.0342 | 2N5631 | NPN | M |
| | Q 12 | 50.03.0484 | MPSA42 | NPN | M |
| | Q 13 | 50.03.0485 | MPSA92 | PNP | M |
| | Q 14 | 50.03.0491 | BC 174 B | NPN / BC 190 B | |
| | Q 15 | 50.03.0436 | BC 237 B | NPN / BC 107 B | |
| | Q 16 | 50.03.0523 | 2N5474 | NPN / 2SD 743 A | RCA |
| | Q17,18 | 50.03.0485 | MPSA92 | PNP | M |
| | | | | | |
| | R 1 | 57.43.4472 | 4,7 kΩ | 5% 0,5W CF | |
| | R 2 | 57.11.4822 | 8,2 kΩ | 5% 0,25W CF | |
| 4 | R 3 | 57.11.4563 | 56 kΩ | " | |
| | R 4 | 57.11.4561 | 560 Ω | " | |
| | R 5 | 57.11.4121 | 120 Ω | " | |

| IND | DATE | NAME |
|---|---|---|
| ⑤ | 6.5.80 | Ho |
| ⑥ | 2.7.80 | Rem. |
| ⑦ | 2.7.81 | Sel |
| ⑧ | | |
| ○ | 5.6.79 | Ke |

M : Motorola
CF : Carbon film

STUDER POWER AMPLIFIER 1.780.105.00 PAGE 2 OF 4

| IND | POS NO | PART NO | VALUE | SPECIFICATIONS/EQUIVALENT | MFR |
|---|---|---|---|---|---|
| | R 6 | 57.43.4272 | 2,7 kΩ | 5% 0,5W CF | |
| | R 7 | 57.11.4222 | 2,2 kΩ | 5% 0,25W CF | |
| | R 8 | 57.11.4223 | 22 kΩ | " | |
| | R 9 | 57.11.4103 | 10 kΩ | " | |
| | R 10 | 57.11.4473 | 47 kΩ | " | |
| | R 11 | 57.11.4333 | 33 kΩ | " | |
| | R 12 | 58.02.4102 | 1 kΩ | 20% 0,1W CF | |
| | R 13 | 57.99.0185 | 10 Ω | 10% 5W WR | |
| | R 14 | 57.99.0192 | 0,22 Ω | " | |
| | R 15 | 57.42.4330 | 33 Ω | 5% 0,3W CF | |
| | R 16 | 57.11.4102 | 1 kΩ | 5% 0,25W CF | |
| | R 17 | 57.11.4222 | 2,2 kΩ | " | |
| | R 18 | 57.11.4682 | 6,8 kΩ | " | |
| | R 19 | 57.11.4821 | 820 Ω | " | |
| | R 20 | 57.11.4223 | 22 kΩ | " | |
| | R 21 | 57.11.4102 | 1 kΩ | " | |
| | R 22 | 57.11.4272 | 2,7 kΩ | " | |
| | R 23 | 57.11.4333 | 33 kΩ | " | |
| | R 24 | 57.11.4561 | 560 Ω | " | |
| | R 25 | 57.99.0184 | 33 Ω | 10% 5W WR | |
| | R 26 | 57.11.4153 | 15 kΩ | 5% 0,25W CF | |
| | R 27 | 57.99.0192 | 0,22 Ω | 10% 5W WR | |
| | R 28 | 57.11.4102 | 1 kΩ | 5% 0,25W CF | |
| | R29,30 | 57.11.4272 | 2,7 kΩ | " | |
| | R31,32 | 57.11.4104 | 100 kΩ | " | |
| | R33,34 | 57.11.4223 | 22 kΩ | " | |
| | R 35 | 57.11.4333 | 33 kΩ | " | |
| | R 36 | 57.11.4103 | 10 kΩ | " | |
| | R 37 | 57.43.4472 | 4,7 kΩ | 5% 0,5W CF | |
| | R 38 | 57.11.4822 | 8,2 kΩ | 5% 0,25W CF | |

| IND | DATE | NAME |
|---|---|---|
| ⑤ | 5.5.80 | Ho |
| ⑥ | 2.7.80 | Rem. |
| ⑦ | 2.7.81 | Sel |
| ⑧ | | |
| ○ | 5.6.79 | Ke |

WR : Wire Wound

STUDER POWER AMPLIFIER 1.780.105.00 PAGE 3 OF 4

| IND | POS NO | PART NO | VALUE | SPECIFICATIONS/EQUIVALENT | MFR |
|---|---|---|---|---|---|
| 4 | R 39 | 57.11.4563 | 56 kΩ | 5% 0,25W CF | |
| | R 40 | 57.11.4561 | 560 Ω | " | |
| | R 41 | 57.11.4121 | 120 Ω | " | |
| | R 42 | 57.43.4272 | 2,7 kΩ | 5% 0,5W CF | |
| | R 43 | 57.11.4222 | 2,2 kΩ | 5% 0,25W CF | |
| | R 44 | 57.11.4103 | 10 kΩ | " | |
| | R 45..47 | 57.11.4223 | 22 kΩ | " | |
| | R 48 | 57.11.4103 | 10 kΩ | " | |
| ⑤ | ~~R 49~~ | ~~57.11.4121~~ | ~~120 Ω~~ | " | |
| ⑤ | R 51,52 | 57.11.4220 | 22 Ω | " | |

| IND | DATE | NAME |
|---|---|---|
| ⑤ | 6.5.80 | Ho |
| ⑥ | 2.7.80 | Rem. |
| ⑦ | 2.7.81 | Sel |
| ⑧ | | |
| ○ | 5.6.79 | Ke |

STUDER POWER AMPLIFIER 1.780.105.00 PAGE 4 OF 4

POWER AMPLIFIER PCB 1.780.105

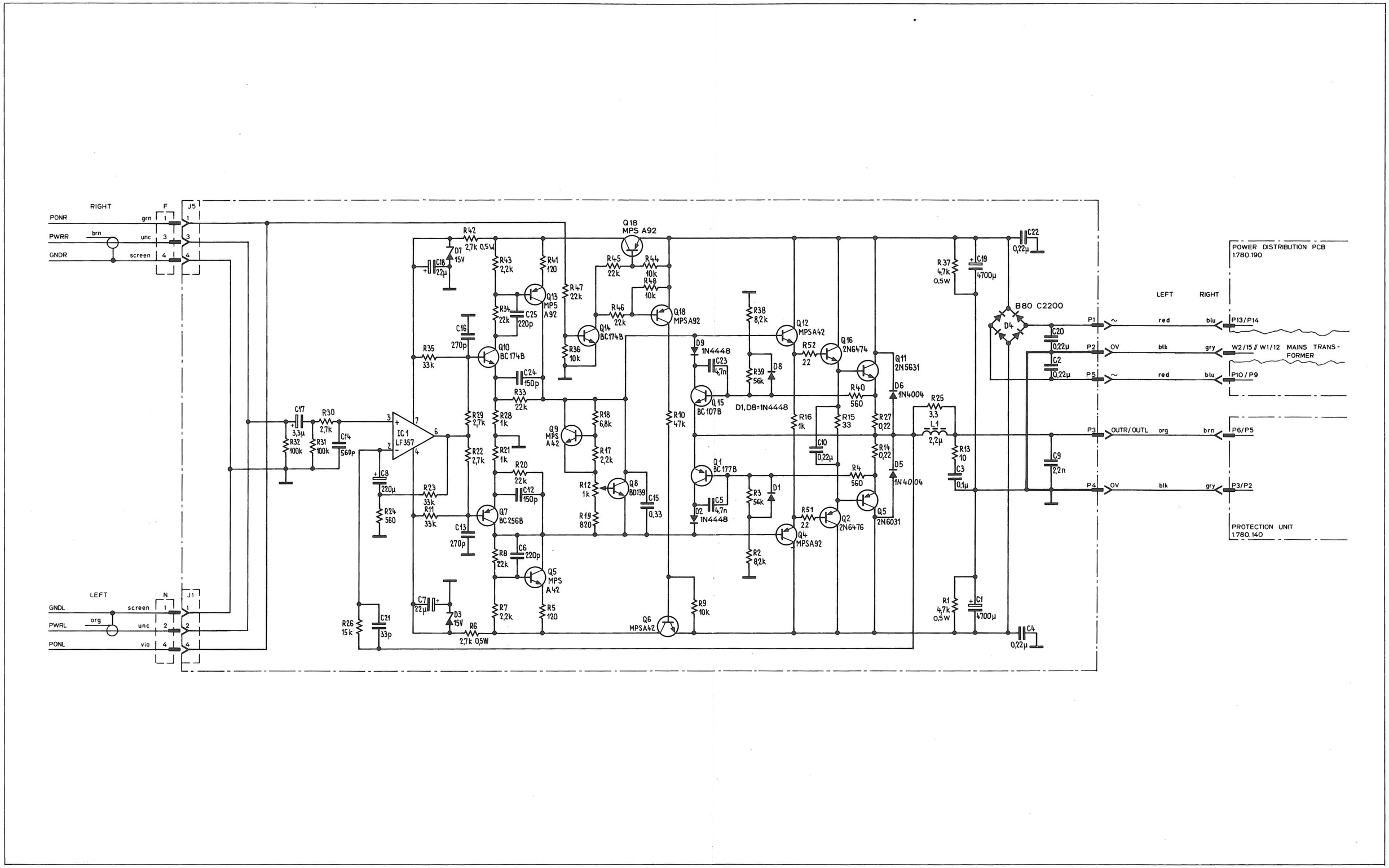

## SPEAKER PROTECTION UNIT 1.780.140–81

| IND | POS NO | PART NO | VALUE | SPECIFICATIONS/EQUIVALENT | MFR |
|---|---|---|---|---|---|
| | C1, C2 | 59.32.3103 | 10 nF | 80% 40V CER | |
| | C3. 6 | 59.30.7100 | 10 µF | 20% 25V TA | |
| | C7 | 59.34.2270 | 27 pF | 5% N150 50V CER | |
| | C8, 9 | 59.99.0189 | 13 pF | ±0.25pF N150 50V CER | |
| | C10, 11 | 59.32.3103 | 10 nF | 80% 40V CER | |
| | D1. 8 | 50.04.0125 | 1N4448 | 100mA, 75V | |
| | IC 1 | 50.05.0245 | RC 4558 P | Dual opamp. /RC 4558 DN | |
| | J 1 | 54.01.0312 | 19 pole | | AMP |
| | K1, 2 | 56.01.0120 | 220V/4A | 24V Relais AZ 731-14-2 | Zettler |
| | P1. 6 | 54.02.0320 | 2,8 x 0,8mm | | AMP |
| | P7, 8 | 54.02.0328 | 2,8 x 0,8mm | | AMP |
| | L1 | 1.166.197.00 | | Balun | |
| | | 1.166.195.01 | | Coil | |
| | L2, 3 | 61.02.0113 | | Core of Coil | |
| | | 61.02.0114 | | Coilform | |
| | R1 | 57.11.4393 | 39 kΩ | 5% 0,25W CF | |
| | R2 | 57.11.4154 | 150 kΩ | " | |
| | R3 | 57.11.4103 | 10 kΩ | " | |
| | R4.5 | 57.11.4154 | 150 kΩ | " | |
| | R6.7 | 57.11.4333 | 33 kΩ | " | |
| | R8.9 | 57.11.4154 | 150 kΩ | " | |
| | R10 | 57.11.4393 | 39 kΩ | " | |
| | R11 | 57.11.4154 | 150 kΩ | " | |

| IND | DATE | NAME |
|---|---|---|
| ④ | | |
| ③ | | |
| ② | | |
| ① | 9.1.82 | Rohr. 81 |
| ○ | 30.5.79 | Ha |

CER : Ceramic
TA : Tantalum
CF : Carbonfilm

STUDER | CONNECTIONUNIT LEFT | 1.780.140.81 | PAGE 1 OF 2

| IND | POS NO | PART NO | VALUE | SPECIFICATIONS/EQUIVALENT | MFR |
|---|---|---|---|---|---|
| | R12 | 57.11.4183 | 18 kΩ | 5% 0,25W CF | |
| | R13,14 | 57.43.4471 | 470 Ω | 5% 0,5W CF | |
| ① | R15 | 57.11.4103 | 10 kΩ | 5% 0,25 CF | |
| ① | R16 | 57.11.6472 | 6.7 kΩ | 5% 0.25 CF | |

| IND | DATE | NAME |
|---|---|---|
| ④ | | |
| ③ | | |
| ② | | |
| ① | 9.1.81 | Rohr. 81 |
| ○ | 30.5.79 | Ha |

STUDER | CONNECTIONUNIT LEFT | 1.780.140.81 | PAGE 2 OF 2

RIGHT SPEAKERS LEFT

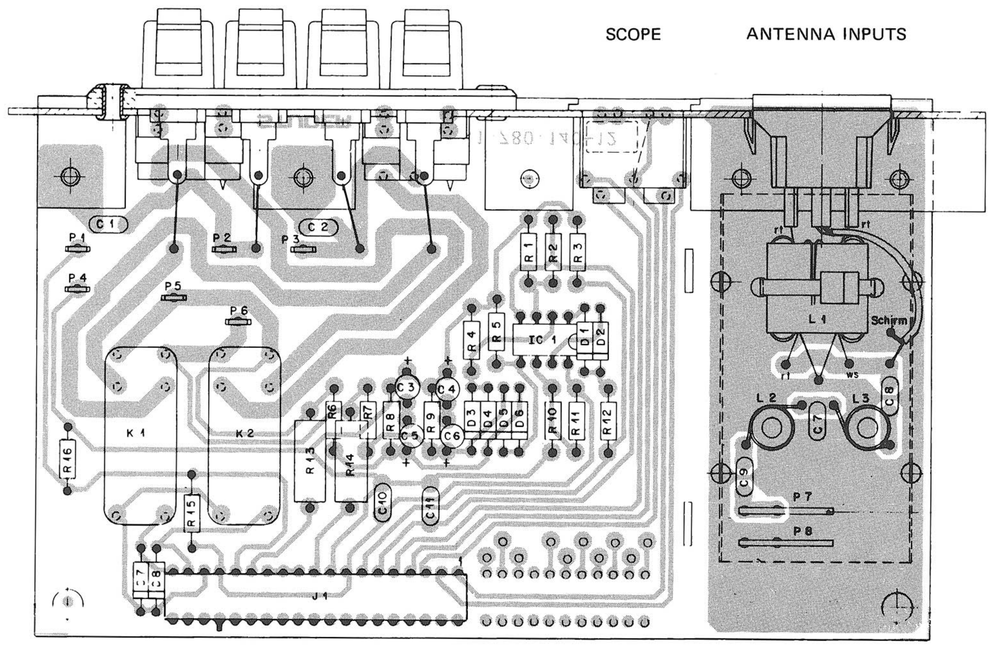

**SPEAKER PROTECTION UNIT 1.780.140–81**

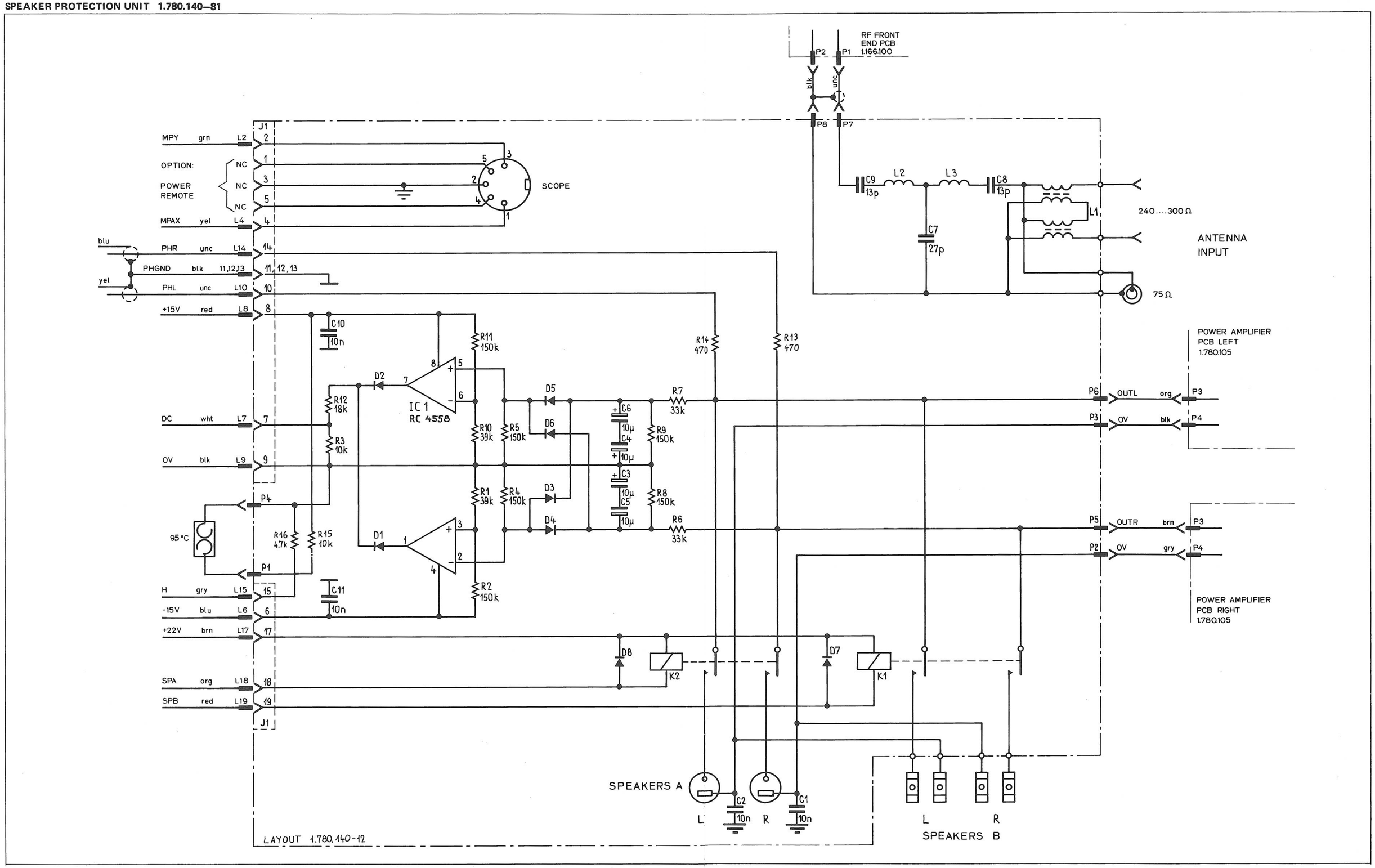

## SPEAKER PROTECTION UNIT 1.780.140

| IND | POS NO | PART NO | VALUE | SPECIFICATIONS/EQUIVALENT | MFR |
|---|---|---|---|---|---|
| | C1, C2 | 59.32.3103 | 10 nF | 80% 40V CER | |
| | C3..6 | 59.30.7100 | 10 µF | 20% 25V TA | |
| | C7 | 59.34.2270 | 27 pF | 5% N150 50V CER | |
| | C8,9 | 59.99.0189 | 13 pF | ±0.25pF N150 50V CER | |
| | C10,11 | 59.32.3103 | 10 nF | 80% 40V CER | |
| | D1..8 | 50.04.0125 | 1N4448 | 100mA, 75V | |
| | IC 1 | 50.05.0245 | RC 4558 P | Dual opamp. /RC 4558 DN | |
| | J 1 | 54.01.0312 | 19 pole | | AMP |
| | K1,2 | 56.01.0120 | 220V/4A | 24V Relais AZ 731-14-2 | Zettler |
| | P1..6 | 54.02.0320 | 2,8 x 0,8mm | | AMP |
| | P7,8 | 54.02.0328 | 2,8 x 0,8mm | | AMP |
| | L1 | 1.166.197.00 | | Balun | |
| | | 1.166.195.01 | | Coil | |
| | L2,3 | 61.02.0113 | | Core of Coil | |
| | | 61.02.0114 | | Coilform | |
| | R1 | 57.11.4393 | 39 kΩ | 5% 0,25W CF | |
| | R2 | 57.11.4154 | 150 kΩ | " | |
| | R3 | 57.11.4103 | 10 kΩ | " | |
| | R4,5 | 57.11.4154 | 150 kΩ | " | |
| | R6,7 | 57.11.4333 | 33 kΩ | " | |
| | R8,9 | 57.11.4154 | 150 kΩ | " | |
| | R10 | 57.11.4393 | 39 kΩ | " | |
| | R11 | 57.11.4154 | 150 kΩ | " | |

| IND | DATE | NAME |
|---|---|---|
| 4 | | |
| 3 | | |
| 2 | | |
| 1 | | |
| 0 | 30.5.79 | He |

CER : Ceramic
TA : Tantalum
CF : Carbonfilm

STUDER | SPEAKER PROTECTION UNIT | 1.780.140.00 | PAGE 1 OF 2

| IND | POS NO | PART NO | VALUE | SPECIFICATIONS/EQUIVALENT | MFR |
|---|---|---|---|---|---|
| | R12 | 57.11.4183 | 18 kΩ | 5% 0,25W CF | |
| | R13,14 | 57.43.4471 | 470 Ω | 5% 0,5W CF | |

| IND | DATE | NAME |
|---|---|---|
| 4 | | |
| 3 | | |
| 2 | | |
| 1 | | |
| 0 | 30.5.79 | He |

STUDER | SPEAKER PROTECTION UNIT | 1.780.140.00 | PAGE 2 OF 2

RIGHT SPEAKERS LEFT

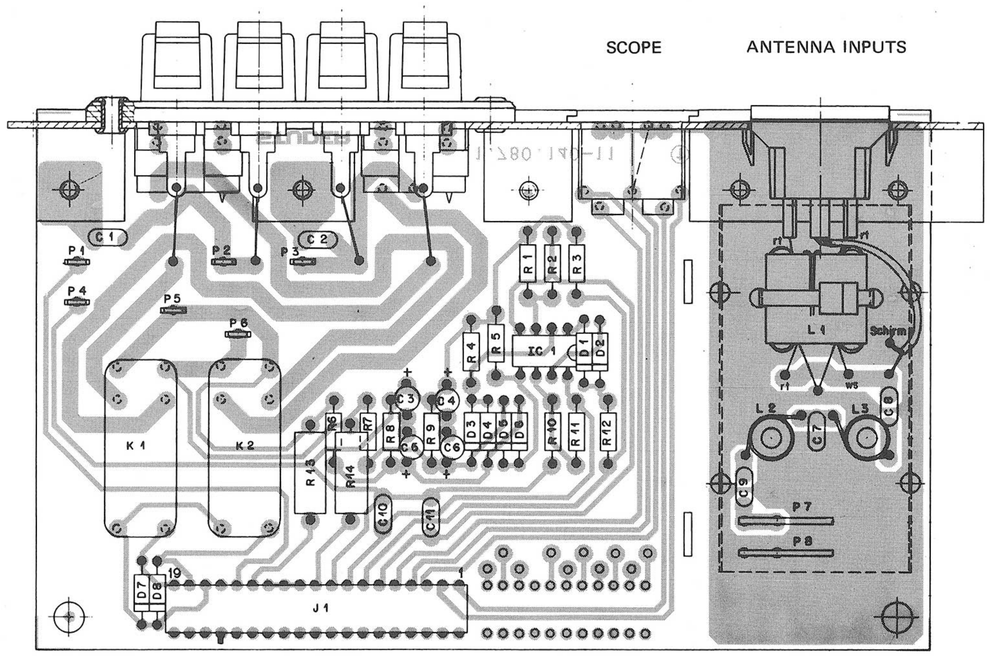

SPEAKER PROTECTION UNIT 1.780.140

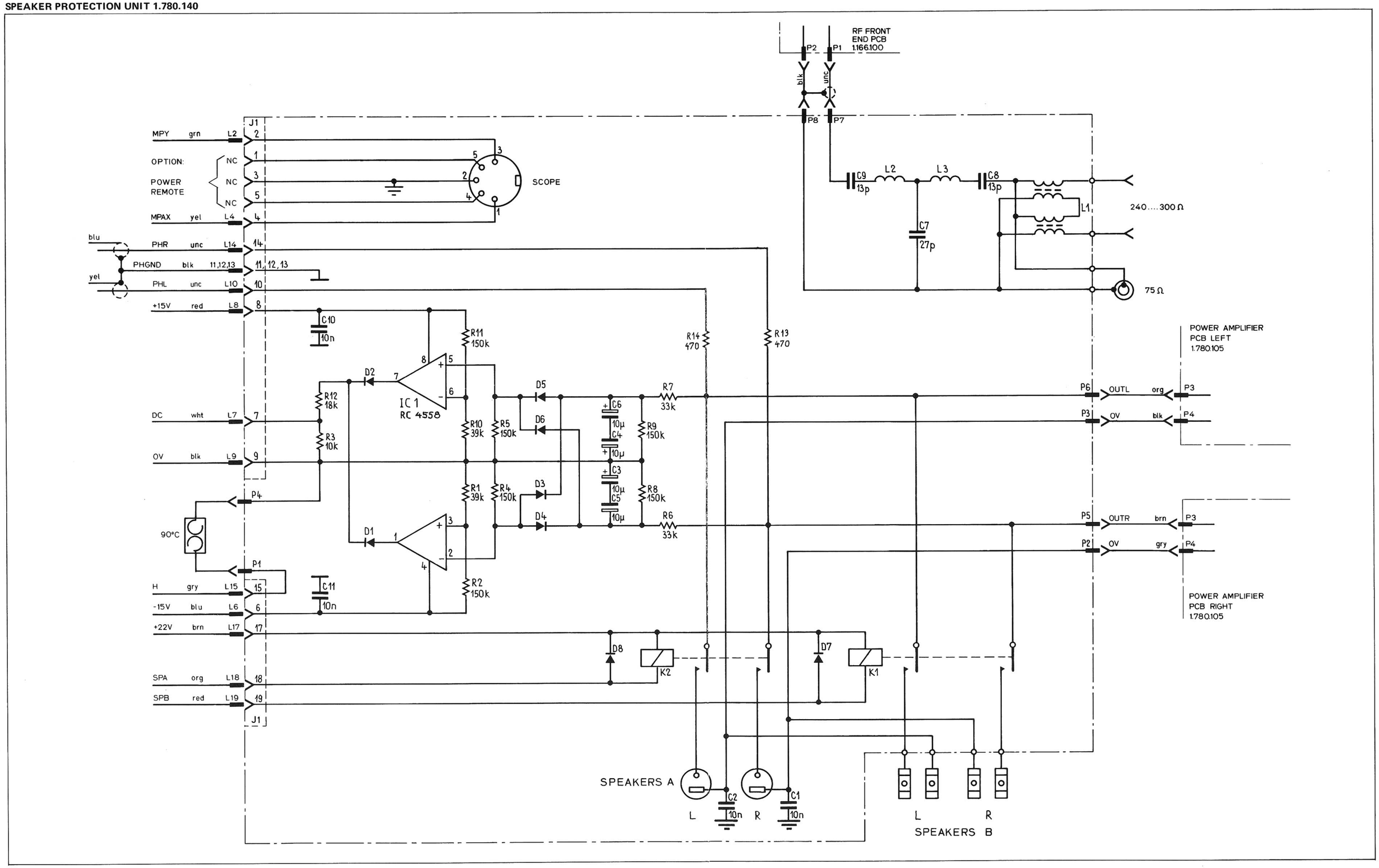

## DOLBY PROCESSOR PCB 1.166.400 / DUMMY PLUG 1.166.090

| IND | POS NO | PART NO | VALUE | SPECIFICATIONS/EQUIVALENT | MFR |
|---|---|---|---|---|---|
| | C 1 | 59.32.3103 | 0.01 µF | 20% CER | |
| | C 2 | 59.30.4100 | 10 µF | TA 16V | |
| | C 3 | 59.32.3103 | 0.01 µF | 20% CER | |
| | C 4 | 59.30.4100 | 10 µF | TA 16V | |
| | C 5 | " " " | " | " " | |
| | C 6 | 59.25.3221 | 220 µF | EL 16V | |
| | C 7 | 59.12.7273 | 0.027 µF | 1% PS | |
| | C 8 | 59.12.7562 | 5600 pF | " " | |
| | C 9 | 59.12.7472 | 4700 pF | " " | |
| | C 10 | 59.25.3221 | 220 µF | EL 16V | |
| | C 11 | 59.12.7273 | 0.027 µF | 1% PS | |
| | C 12 | 59.12.7562 | 5600 pF | " " | |
| | C 13 | 59.12.7472 | 4700 pF | " " | |
| | C 14 | 59.30.4100 | 10 µF | EL 16V | |
| | C 15 | " " " | " | " " | |
| | C 16 | " " " | " | " " | |
| | C 17 | 59.32.3103 | 0.01 µF | 20% CER | |
| | C 18 | " " " | " | " " | |
| | C 19 | 59.30.4100 | 10 µF | EL 16V | |
| | C 20 | " " " | " | " " | |
| | C 21 | 59.12.4473 | 0.047 µF | 5% MPE | |
| | C 22 | 59.31.6104 | 0.1 µF | 10% " | |
| | C 23 | 59.31.6334 | 0.33 µF | " " | |
| | C 24 | 59.12.4473 | 0.047 µF | 5% " | |
| | C 25 | 59.31.6104 | 0.1 µF | 10% " | |
| | C 26 | 59.31.6334 | 0.33 µF | " " | |
| | | | | | |
| | D 1 | 50.04.0125 | 1N 4448 | Si-Diode 100 mA 50V | Any |
| | D 2 | " " " | " | " " " | " |
| | D 3 | " " " | " | " " " | " |

| IND | DATE | NAME |
|---|---|---|
| 4 | | |
| 3 | | |
| 2 | | |
| 1 | | |
| 0 | 17.10.77 | Bal. |

CER = CERAMIC
TA = Solid Tantalum
EL = Electrolytic
PS = Polystyrene or eqv.
MPE = Metallized Polyester

STUDER | Dolby - Processor | PL 1.166.400.00 | PAGE 1 OF 2

| IND | POS NO | PART NO | VALUE | SPECIFICATIONS/EQUIVALENT | MFR |
|---|---|---|---|---|---|
| | IC 1 | 50.05.0245 | RC 4558 | Dual Op Amp | R, TI |
| | IC 2 | 50.05.0258 | NE 645 8 | Dolby Processor | ST |
| | IC 3 | " " " | " | | |
| | K 1 | 56.04.0121 | PZ 4 | Relay 24 V, 0.03 A | ITT |
| | | | | | |
| | R 1 | 57.41.4392 | 3.9 kΩ | 5% | |
| | R 2 | 58.02.5102 | 1 kΩ | Pot'meter ±20% | |
| | R 3 | 57.41.4392 | 3.9 kΩ | 5% | |
| 1 | R 4 | 57.41.4102 | 1 kΩ | " | |
| | R 5 | 57.41.4473 | 47 kΩ | " | |
| | R 6 | " " " | " | " | |
| 1 | R 7 | 57.41.4102 | 1 kΩ | " | |
| | R 8 | 58.02.5102 | 1 kΩ | Pot'meter ± 20% | |
| | R 9 | 57.41.4181 | 180 Ω | " | |
| | R 10 | " " " | " | " | |
| | R 11 | 57.39.3321 | 3.32 kΩ | 1% | |
| | R 12 | 57.41.4473 | 47 kΩ | 5% | |
| | R 13 | 57.39.3321 | 3.32 kΩ | 1% | |
| | R 14 | 57.41.4473 | 47 kΩ | 5% | |
| | R 15 | 57.41.4102 | 1 kΩ | 5% | |
| | R 16 | 57.39.2003 | 200 kΩ | 1% | |
| | R 17 | 57.41.4102 | 1 kΩ | 5% | |
| | R 18 | " " " | " | " | |
| | R 19 | 57.39.2003 | 200 kΩ | 1% | |
| | R 20 | 57.41.4102 | 1 kΩ | 5% | |
| 2 | R 21 | ——— | | | |
| | R 22 | 57.41.4274 | 270 kΩ | " | |
| 2 | R 23 | ——— | | | |
| | R 24 | 57.41.4274 | 270 kΩ | " | |
| | | | | | |

| IND | DATE | NAME |
|---|---|---|
| 4 | | |
| 3 | | |
| 2 | 29.1.80 | Ho. |
| 1 | 27.4.78 | Rom. |
| 0 | 17.10.77 | Bal. |

R = Raytheon
TI = Texas Instr.
ST = STUDER

STUDER | Dolby - Processor | PL 1.166.400.00 | PAGE 2 OF 2

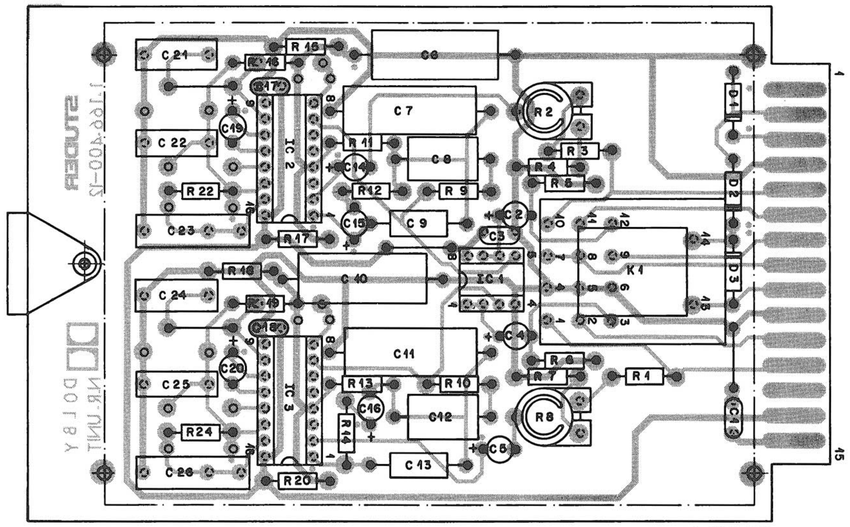


1.166.400

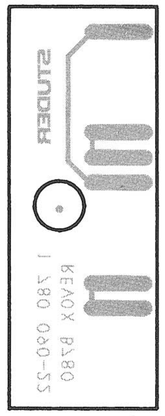

1.166.090

Noise reduction system manufactured under license from Dolby Laboratories. Dolby and the double-D symbol are trademarcs of Dolby Laboratories.

29.01.80

**DOLBY PROCESSOR PCB 1.166.400 / DUMMY PLUG 1.166.090**

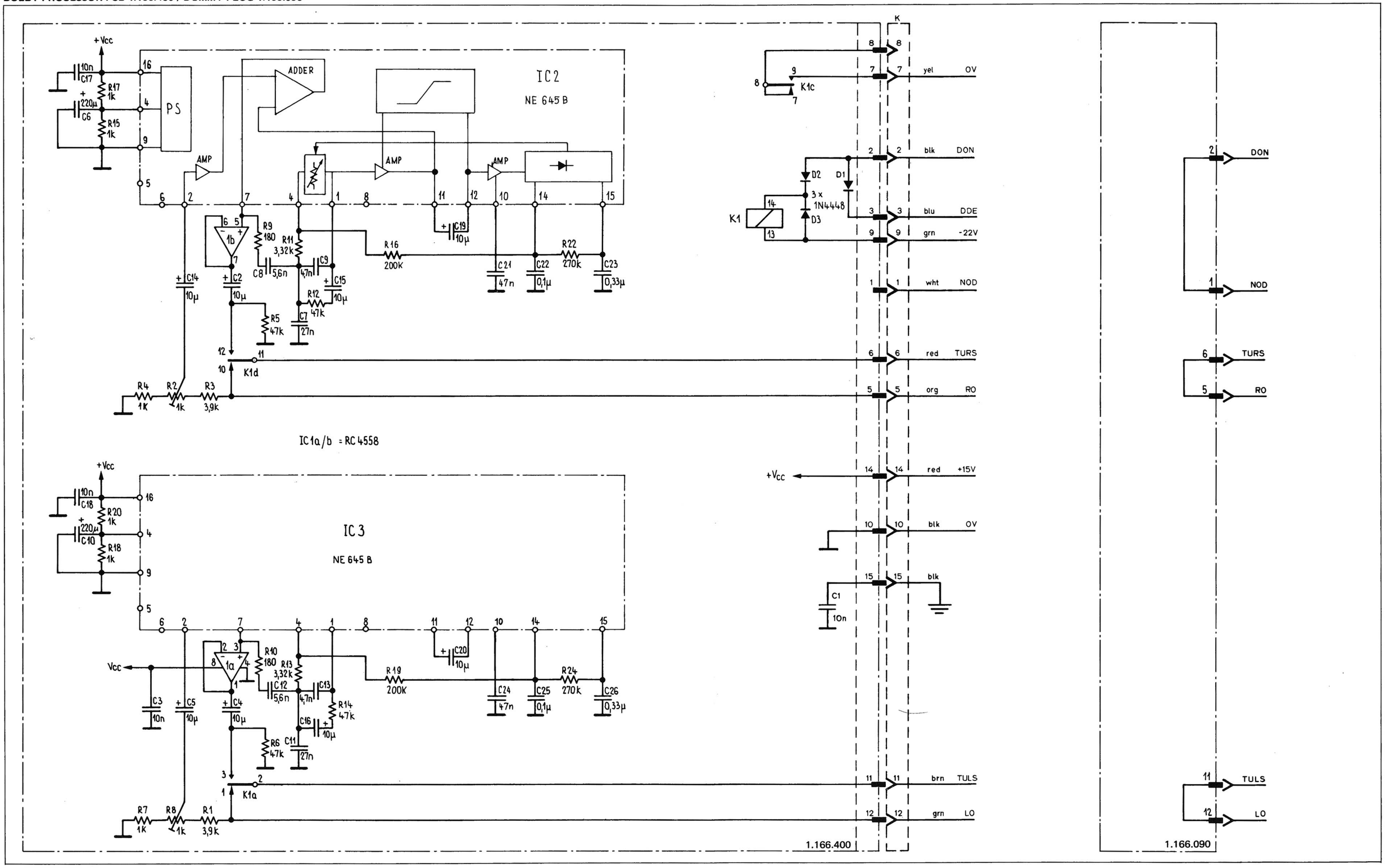

## ANTENNA CONTROL INTERFACE PCB 1.780.400

| IND | POS NO | PART NO | VALUE | SPECIFICATIONS/EQUIVALENT | MFR |
|---|---|---|---|---|---|
| | C1 | 59.32.3103 | 10nF | -20 +100 % 40V CER | |
| | C2-9 | 59.99.0205 | 68nF | -20 +80 % 100V " | |
| | C10 | 59.32.3103 | 10nF | -20 +100 % 40V " | |
| | C11 | 59.30.6109 | 1µF | -20 +50 % 35V TA | |
| | C12 | 59.32.3103 | 10nF | -20 +100 % 40V CER | |
| | D1-2 | 50.04.0125 | 1N4448 | | |
| | IC1 | 50.13.0103 | SAA1060 | | |
| 1 | IC2 | 50.07.0512 | MC14512 | CMOS /4512 BPC | F |
| | J1 | 54.01.0308 | 11 poles | CJS | |
| | J2 | 54.01.0236 | 12 " | CJS | |
| | Q1 | 50.03.0315 | BC160-16 | PNP | |
| | R1-2 | 57.11.4103 | 10 kΩ | ±5% 0.25W CSCH | |
| | R3 | 57.11.4104 | 100 kΩ | " " " | |
| | R4 | 57.11.4473 | 47 kΩ | " " " | |
| | R5 | 57.11.4104 | 100 kΩ | " " " | |
| | R6-7 | 57.11.4473 | 47 kΩ | " " " | |
| | R8 | 57.11.4104 | 100 kΩ | " " " | |
| | R9 | 57.11.4103 | 10 kΩ | " " " | |
| | R10 | 57.11.4473 | 47 kΩ | " " " | |
| | R11 | 57.11.4104 | 100 kΩ | " " " | |
| | R12 | 57.11.4103 | 10 kΩ | " " " | |
| | R13 | 57.11.4473 | 47 kΩ | " " " | |
| | R14 | 57.11.4104 | 100 kΩ | " " " | |
| | R15 | 57.11.4103 | 10 kΩ | " " " | |
| | R16 | 57.11.4473 | 47 kΩ | " " " | |
| | R17 | 57.11.4104 | 100 kΩ | " " " | |
| | R18 | 57.11.4103 | 10 kΩ | " " " | |
| | R19 | 57.11.4473 | 47 kΩ | " " " | |
| | R20 | 57.11.4104 | 100 kΩ | " " " | |
| | R21-22 | 57.11.4103 | 10 kΩ | " " " | |

| IND | DATE | NAME |
|---|---|---|
| 4 | | |
| 3 | | |
| 2 | | |
| 1 | 4.7.80 | Rom |
| 0 | 4.9.79 | A. Dünner L2 |

STUDER | ANTENNA CONTROL | 1.780.400.00 | PAGE 1 OF 2

| IND | POS NO | PART NO | VALUE | SPECIFICATIONS/EQUIVALENT | MFR |
|---|---|---|---|---|---|
| | R23 | 57.11.4332 | 3.3 kΩ | ±5% 0.25W CSCH | |
| | R24 | 57.11.4829 | 8.2 Ω | " " " | |
| | XIC1 | 53.03.0169 | 24 poles | IC-socket | |
| | XIC2 | 53.03.0168 | 16 " | " " | |
| | W1-5 | | | | |

| IND | DATE | NAME |
|---|---|---|
| 4 | | |
| 3 | | |
| 2 | | |
| 1 | 4.7.80 | Rom |
| 0 | 4.9.79 | A. Dünner L2 |

STUDER | ANTENNA-CONTROL | 1.780.400.00 | PAGE 2 OF 2

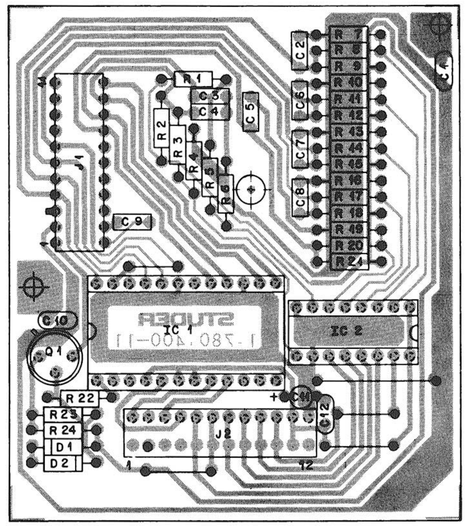

**ANTENNA CONTROL INTERFACE PCB 1.780.400**

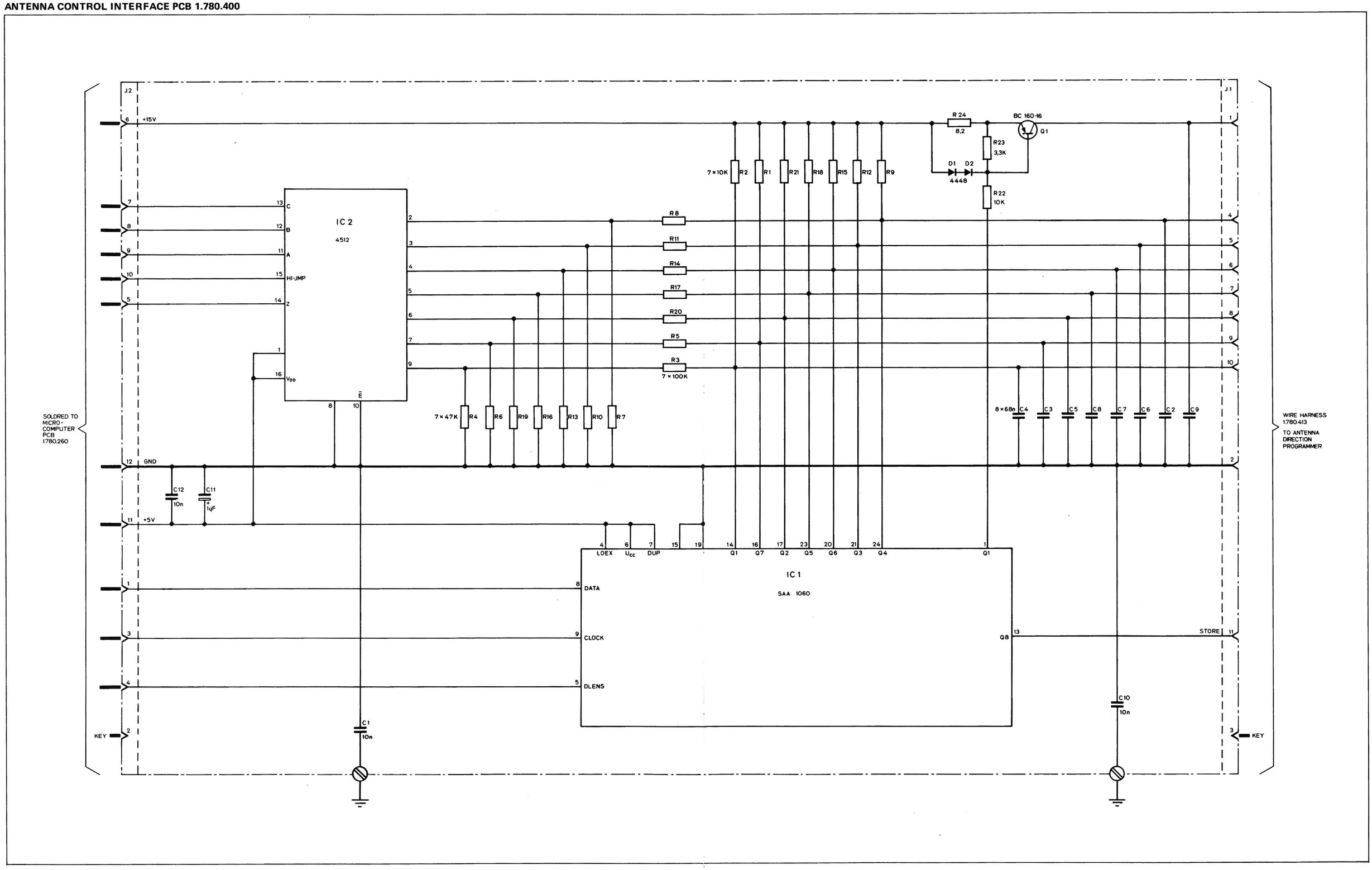

## POWER-ON REMOTE CONTROL PCB 1.780.430

| IND | POS NO | PART NO | VALUE | SPECIFICATIONS/EQUIVALENT | MFR |
|---|---|---|---|---|---|
| | D1, D2 | 50.04.0125 | 1N 4448 | 50V. 50 mA | |
| | J1, J2 | 54.01.0216 | CIS-6 poles | | |
| | K1 | 56.01.0117 | 275 A | 180 Ω. 8-15 V. / AZ 732 | Zettler |

| IND | DATE | NAME |
|---|---|---|
| 4 | | |
| 3 | | |
| 2 | | |
| 1 | | |
| 0 | 14.7.80 | A. Dünner |

STUDER | POWER-ON REMOTE CONTROL | 1.780.430 | PAGE 1 OF 1

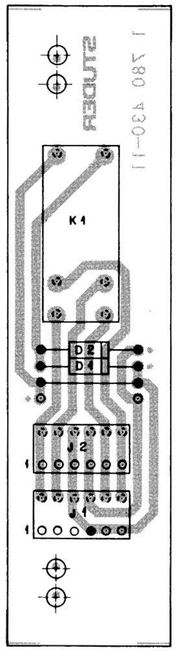


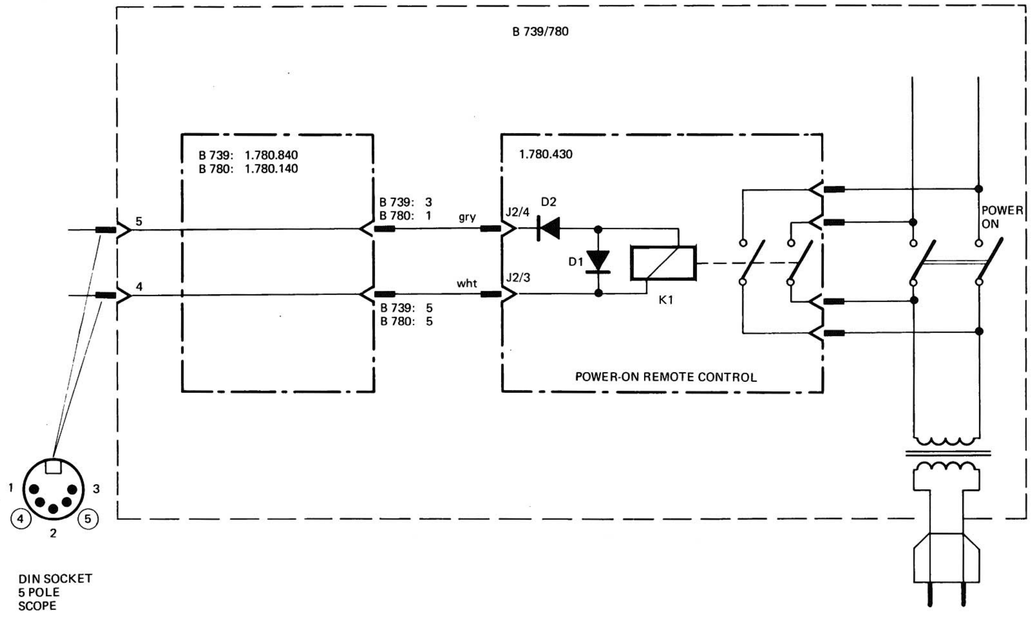

## WIRE HARNESS / FRONT 1.780.170

**a** — PLUGGED TO MICROCOMPUTER PCB 1.780.260 J6

| PIN | SIGNAL | COLOR | TO |
|---|---|---|---|
| 1 | LSNE | brn | c13 |
| 2 | CHTM | red | f3 |
| 3 | STME | bru | f1 |
| 4 | – | – | – |
| 5 | STLY | blu | d5 |
| 6 | MOFF | vio | d6 |
| 7 | MONO | gry | d7 |
| 8 | HIBL | yel | d1 |
| 9 | TSPA | blu | k2 |
| 10 | TSPB | vio | k1 |
| 11 | NR | gru | d2 |
| 12 | PHO | red | j6 |
| 13 | AUX | org | j4 |
| 14 | TA1 | yel | j3 |
| 15 | TA2 | grn | j2 |
| 16 | RECSET | gry | k5 |
| 17 | RECOFF | wht | k6 |
| 18 | TU | bru | j7 |

**b** — PLUGGED TO MICROCOMPUTER PCB 1.780.260 J7

| PIN | SIGNAL | COLOR | TO |
|---|---|---|---|
| 1 | DLEN2 | wht | e1 |
| 2 | DLEN1 | gry | e2 |
| 3 | DATA | yel | e3 |
| 4 | CLCK | brn | e4 |
| 5 | – | – | – |
| 6 | KS1 | brn | c3 |
| 7 | KS2 | red | c8 |
| 8 | KS3 | org | c9 |
| 9 | KS4 | yel | c10 |
| 10 | KS5 | grn | c11 |
| 11 | KS6 | blu | c2 |
| 12 | KS7 | vio | c7 |
| 13 | KS8 | gry | c5 |
| 14 | KS9 | wht | c4 |
| 15 | KSO | blk | c12 |
| 16 | T75µs | org | f4 |
| 17 | UP | org | c15 |
| 18 | DOWN | yel | c14 |

**c** — PLUGGED TO STATION SELECTION KEY BOARD 1.780.225 J1

| PIN | SIGNAL | COLOR | TO |
|---|---|---|---|
| 1 | OV | blk | g4 |
| 2 | KS6 | blu | b11 |
| 3 | KS1 | brn | b6 |
| 4 | KS9 | wht | b14 |
| 5 | KS8 | gry | b13 |
| 6 | – | – | – |
| 7 | KS7 | vio | b12 |
| 8 | KS2 | red | b7 |
| 9 | KS3 | org | b8 |
| 10 | KS4 | yel | b9 |
| 11 | KS5 | grn | b10 |
| 12 | KS0 | blk | b15 |
| 13 | LSNE | brn | a1 |
| 14 | DOWN | yel | b18 |
| 15 | UP | org | b17 |

**d** — PLUGGED TO PUSHBUTTON BOARD/ FM MODE 1.780.220 J1

| PIN | SIGNAL | COLOR | TO |
|---|---|---|---|
| 1 | HIBL | yel | a8 |
| 2 | NR | grn | a11 |
| 3 | – | – | – |
| 4 | OV | blk | g5 |
| 5 | STLY | blu | a5 |
| 6 | MOFF | vio | a6 |
| 7 | MONO | gry | a7 |

**e** — PLUGGED TO DISPLAY PCB 1.780.245 J2

| PIN | SIGNAL | COLOR | TO |
|---|---|---|---|
| 1 | DLEN2 | wht | b1 |
| 2 | DLEN1 | gry | b2 |
| 3 | DATA | yel | b3 |
| 4 | CLCK | brn | b4 |
| 5 | – | – | – |
| 6 | – | – | – |
| 7 | GND | blk | – |

**f** — PLUGGED TO THRESHOLD CONTROL BOARD 1.780.235 J2

| PIN | SIGNAL | COLOR | TO |
|---|---|---|---|
| 1 | STME | brn | a3 |
| 2 | – | – | – |
| 3 | CHTM | red | a2 |
| 4 | T75µs | org | b16 |

**g** — PLUGGED TO MICROCOMPUTER PCB 1.780.260 J2

| PIN | SIGNAL | COLOR | TO |
|---|---|---|---|
| 1 | OV | blk | k3 |
| 2 | OV | blk | j1 |
| 3 | –UBAT | blk | h1 |
| 4 | OV | blk | c1 |
| 5 | OV | blk | d4 |
| 6 | – | – | – |
| 7 | – | – | – |
| 8 | +UBAT | wht | h2 |

**h** — PLUGGED TO AKKUMULATOR

| PIN | SIGNAL | COLOR | TO |
|---|---|---|---|
| 1 | –UBAT | blk | g3 |
| 2 | +UBAT | wht | g8 |

**i** — PLUGGED TO INPUT SELECTION KEY BOARD 1.780.230 J1

| PIN | SIGNAL | COLOR | TO |
|---|---|---|---|
| 1 | OV | blk | g2 |
| 2 | TA2 | grn | a15 |
| 3 | TA1 | yel | a14 |
| 4 | AUX | org | a13 |
| 5 | – | – | – |
| 6 | PHO | red | a12 |
| 7 | TU | brn | a18 |

**k** — PLUGGED TO PUSHBUTTON BOARD/ OUTPUT SELECTION 1.780.240 J1

| PIN | SIGNAL | COLOR | TO |
|---|---|---|---|
| 1 | TSPB | vio | a10 |
| 2 | TSPA | blu | a9 |
| 3 | OV | blk | g1 |
| 4 | – | – | – |
| 5 | RECSET | gry | a16 |
| 6 | RECOFF | wht | a17 |

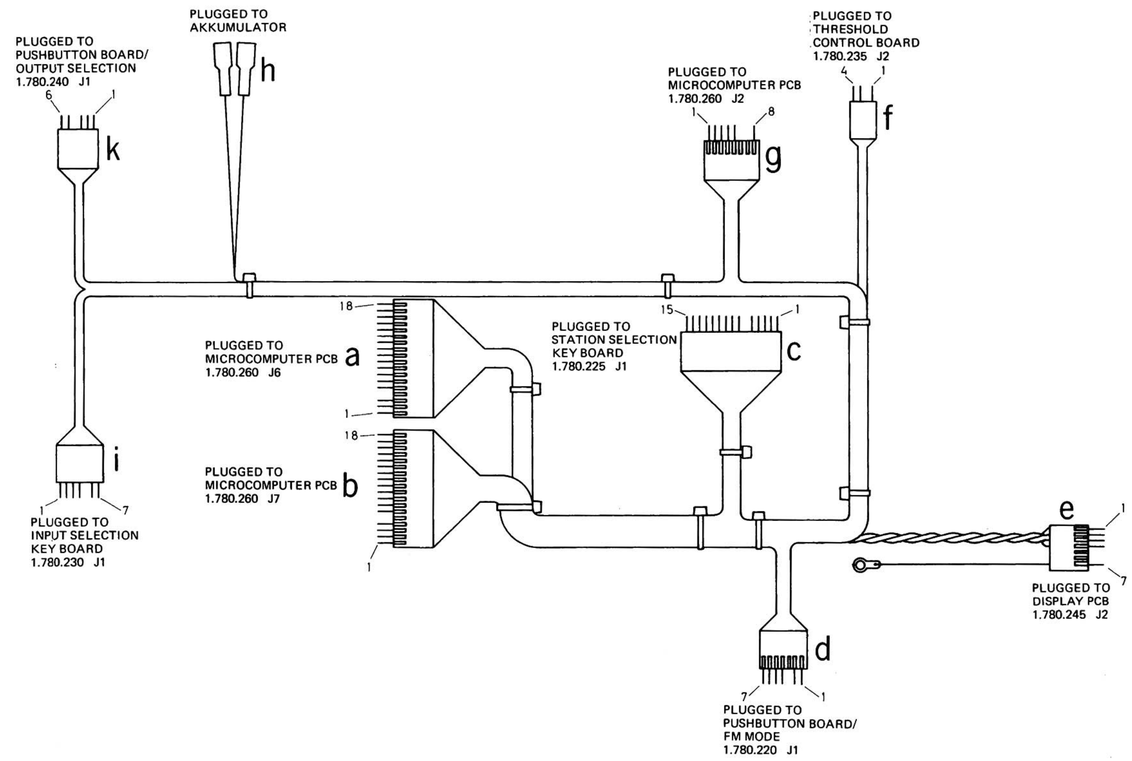

## WIRE HARNESS / REAR 1.780.166

### A — PLUGGED TO PREAMPLIFIER PCB 1.780.205 J6

| PIN | SIGNAL | COLOR | TO |
|---|---|---|---|
| 1 | OV | blk | W3 |
| 2 | PH | gry | S3 |
| 3 | -22V | grn | W10 |
| 4 | PHL | unc | L10 |
| 5 | PHGND | screen | L11 |
| 6 | PHR | unc | L14 |
| 7 | PHGND | screen | L13 |
| 8 | PRER | unc | H6 |
| 9 | PREL | red | H8 |
| 10 | PREGND | screen | H5 |
| 11 | OV | blk | W9 |
| 12 | OV | screen | G13 |
| 13 | MR | unc | G14 |
| 14 | ML | red | G15 |
| 15 | OV | blk | W9 |
| 16 | -15V | blu | W8 |
| 17 | – | – | – |
| 18 | +15V | red | W2 |

### B — PLUGGED TO POWER ON/ STANDBY SWITCH

| PIN | SIGNAL | COLOR | TO |
|---|---|---|---|
| 1 | – | vio | I 2 |
| 2 | – | vio | I 5 |
| 3 | – | org | I 6 |
| 4 | – | org | I 1 |

### C — PLUGGED TO FM DEMODULATOR PCB 1.166.130 J1

| PIN | SIGNAL | COLOR | TO |
|---|---|---|---|
| 1 | +15V | red | W2 |
| 2 | – | – | – |
| 3 | +32V | vio | W11 |
| 4 | MPAX | yel | L4 |
| 5 | MPX | wht | P2 |
| 6 | OV | blk | P3 |
| 7 | -15V | blu | W8 |

### D — PLUGGED TO STEREO DECODER PCB 1.166.150 J1

| PIN | SIGNAL | COLOR | TO |
|---|---|---|---|
| 1 | P | grn | S18 |
| 2 | -15V | blu | W8 |
| 3 | +15V | red | W2 |
| 4 | +32V | vio | W11 |
| 5 | R | red | P16 |
| 6 | L | unc | P15 |
| 7 | OV | screen | P14 |
| 8 | – | – | – |
| 9 | MPXM | gry | P12 |
| 10 | ST | yel | S2 |
| 11 | – | – | – |
| 12 | STFI 2 | grn | S12 |
| 13 | STFI 1 | grn | S11 |
| 14 | +6V | org | W1 |
| 15 | MPX | wht | P1 |

### E — PLUGGED TO IF AMPLIFIER PCB 1.166.120 J1

| PIN | SIGNAL | COLOR | TO |
|---|---|---|---|
| 1 | AGC | brn | M3 |
| 2 | T | wht | Q12 |
| 3 | +32V | vio | W11 |
| 4 | +15V | red | W2 |
| 5 | – | – | – |
| 6 | SS | gry | Q15 |
| 7 | -15V | blu | W8 |

### F — PLUGGED TO POWER AMPLIFIER PCB RIGHT 1.780.105 J5

| PIN | SIGNAL | COLOR | TO |
|---|---|---|---|
| 1 | PONR | grn | S5 |
| 2 | – | – | – |
| 3 | PWRR | unc | H1 |
| 4 | GNDR | screen | H2 |

### G — PLUGGED TO AUDIO CONNECTION UNIT 1.780.145 J2

| PIN | SIGNAL | COLOR | TO |
|---|---|---|---|
| 1 | NF1 | brn | S9 |
| 2 | NF2 | red | S8 |
| 3 | NF3 | org | S7 |
| 4 | NF4 | yel | S6 |
| 5 | NF5 | grn | R7 |
| 6 | NF6 | blu | R6 |
| 7 | NF7 | vio | R5 |
| 8 | NF8 | gry | R4 |
| 9 | OV | blk | K10 |
| 10 | – | – | – |
| 11 | TURS | red | K6 |
| 12 | TULS | brn | K11 |
| 13 | OV | screen | A12 |
| 14 | MR | unc | A13 |
| 15 | ML | red | A14 |
| 16 | +32V | vio | W11 |
| 17 | -15V | blu | W8 |
| 18 | +15V | red | W2 |

### H — PLUGGED TO AUDIO CONNECTION UNIT 1.780.145 J1

| PIN | SIGNAL | COLOR | TO |
|---|---|---|---|
| 1 | PWRR | unc | F3 |
| 2 | GNDR | screen | F4 |
| 3 | PWRL | unc | N2 |
| 4 | GNDL | screen | N1 |
| 5 | PREGND | screen | A10 |
| 6 | PRER | unc | A8 |
| 7 | – | – | – |
| 8 | PREL | red | A9 |
| 9 | PHGND | blk | L12 |

### I — PLUGGED TO POWER DISTRIBUTION PCB 1.780.190 J2

| PIN | SIGNAL | COLOR | TO |
|---|---|---|---|
| 1 | | org | B4 |
| 2 | | vio | B1 |
| 3 | – | – | – |
| 4 | – | – | – |
| 5 | | vio | B2 |
| 6 | | org | B3 |

### K — SOLDRED TO CHASSIS CONNECTOR (DOLBY PROC PCB 1.166.400)

| PIN | SIGNAL | COLOR | TO |
|---|---|---|---|
| 1 | NOD | wht | S17 |
| 2 | DON | blk | S1 |
| 3 | DDE | blu | R18 |
| 4 | – | – | – |
| 5 | RO | org | P6 |
| 6 | TURS | red | G11 |
| 7 | OV | yel | W5 |
| 8 | – | – | – |
| 9 | -22V | grn | W10 |
| 10 | OV | blk | G9 |
| 10 | OV | blk | P9 |
| 11 | TULS | brn | G12 |
| 12 | LO | grn | P5 |
| 13 | – | – | – |
| 14 | +15V | red | W2 |

### L — PLUGGED TO SPEAKER PROTECTION UNIT 1.780.140 J1

| PIN | SIGNAL | COLOR | TO |
|---|---|---|---|
| 1 | – | – | – |
| 2 | MPY | grn | Q14 |
| 3 | – | – | – |
| 4 | MPAX | yel | C4 |
| 5 | – | – | – |
| 6 | -15V | blu | W8 |
| 7 | DC | wht | R15 |
| 8 | +15V | red | W2 |
| 9 | OV | blk | W3 |
| 10 | PHL | unc | A4 |
| 11 | PHGND | screen | A5 |
| 12 | PHGND | blk | H9 |
| 13 | PHGND | blk | A7 |
| 14 | PHR | unc | A6 |
| 15 | H | gry | R19 |
| 16 | – | – | – |
| 17 | +22V | brn | W6 |
| 18 | SPA | org | S16 |
| 19 | SPB | red | S15 |

### M — PLUGGED TO RF FRONT END PCB 1.166.100 J1

| PIN | SIGNAL | COLOR | TO |
|---|---|---|---|
| 1 | +15V | red | W2 |
| 2 | – | – | – |
| 3 | AGC | brn | E1 |
| 4 | -15V | blu | W8 |
| 5 | +32V | vio | W11 |

### N — PLUGGED TO POWER AMPLIFIER PCB LEFT 1.780.105 J1

| PIN | SIGNAL | COLOR | TO |
|---|---|---|---|
| 1 | GNDL | screen | H4 |
| 2 | PWRL | unc | H3 |
| 3 | – | – | – |
| 4 | PONL | vio | S4 |

### O — PLUGGED TO FREQUENCY SYNTHESIEZER PCB 1.780.151 J1

| PIN | SIGNAL | COLOR | TO |
|---|---|---|---|
| 1 | -15V | blu | W8 |
| 2 | CLCK | brn | R1 |
| 3 | DLEN 3 | gry | R2 |
| 4 | DATA | yel | R3 |
| 5 | +32V | vio | W11 |
| 6 | – | – | – |
| 7 | LOC | grn | R12 |
| 8 | +6V | org | W1 |
| 9 | +15V | red | W2 |

### P — PLUGGED TO METER CIRCUIT AND DEEMPHASIS PCB 1.780.155 J1

| PIN | SIGNAL | COLOR | TO |
|---|---|---|---|
| 1 | MPX | wht | D15 |
| 2 | MPX | wht | C5 |
| 3 | OV | blk | C6 |
| 4 | 25µs | gry | R10 |
| 5 | LO | grn | K12 |
| 6 | RO | org | K5 |
| 7 | 75µs | wht | R9 |
| 8 | – | – | – |
| 9 | OV | blk | K10 |
| 10 | +15V | red | W2 |
| 11 | -15V | blu | W8 |
| 12 | MPXM | gry | D9 |
| 13 | MUT | vio | R11 |
| 14 | OV | screen | D7 |
| 15 | L | unc | D6 |
| 16 | R | red | D5 |

### Q — PLUGGED TO METER CIRCUIT AND DEEMPHASIS PCB 1.780.155 J2

| PIN | SIGNAL | COLOR | TO |
|---|---|---|---|
| 1 | THSTA | grn | R14 |
| 2 | PSTA | blk | V2 |
| 3 | THSTE | blu | R13 |
| 4 | PSTE | wht | V6 |
| 5 | FH | yel | R16 |
| 6 | FL | red | R17 |
| 7 | MC | brn | S13 |
| 8 | WW | org | S14 |
| 9 | – | – | – |
| 10 | OV | yel | W5 |
| 11 | TM | yel | V1 |
| 12 | T | wht | E2 |
| 13 | SM | blk | U2 |
| 14 | MPY | grn | L2 |
| 15 | SS | gry | E6 |

### R — PLUGGED TO MICROCOMPUTER PCB 1.780.260 J5

| PIN | SIGNAL | COLOR | TO |
|---|---|---|---|
| 1 | CLCK | brn | O2 |
| 2 | DLEN 3 | gry | O3 |
| 3 | DATA | yel | O4 |
| 4 | NF 8 | gry | G8 |
| 5 | NF 7 | vio | G7 |
| 6 | NF 6 | blu | G6 |
| 7 | NF 5 | grn | G5 |
| 8 | – | – | – |
| 9 | 75µs | wht | P7 |
| 10 | 25µs | gry | P4 |
| 11 | MUT | vio | P13 |
| 12 | LOC | grn | O7 |
| 13 | THSTE | blu | Q3 |
| 14 | THSTA | grn | Q1 |
| 15 | DC | wht | L7 |
| 16 | FH | yel | Q5 |
| 17 | FL | red | Q6 |
| 18 | DDE | blu | K3 |
| 19 | H | gry | L15 |

### S — PLUGGED TO MICROCOMPUTER PCB 1.780.260 J4

| PIN | SIGNAL | COLOR | TO |
|---|---|---|---|
| 1 | DON | blk | K2 |
| 2 | ST | yel | D10 |
| 3 | PH | gry | A2 |
| 4 | PONL | vio | N4 |
| 5 | PONR | grn | F1 |
| 6 | NF 4 | yel | G4 |
| 7 | NF 3 | org | G3 |
| 8 | NF 2 | red | G2 |
| 9 | NF 1 | brn | G1 |
| 10 | – | – | – |
| 11 | STFI 1 | grn | D13 |
| 12 | STFI 2 | grn | D12 |
| 13 | MC | brn | Q7 |
| 14 | WW | org | Q8 |
| 15 | SPB | red | L19 |
| 16 | SPA | org | L18 |
| 17 | NOD | wht | K1 |
| 18 | P | grn | D1 |

### T — PLUGGED TO MICROCOMPUTER PCB 1.780.260 J1

| PIN | SIGNAL | COLOR | TO |
|---|---|---|---|
| 1 | OV | blk | W~3 |
| 2 | 19V~ | gry | W~1 |
| 3 | 19V~ | gry | W~1 |
| 4 | – | – | – |
| 5 | +22V | brn | W6 |
| 6 | +6V | org | W1 |
| 7 | +15V | red | W2 |
| 8 | OV | yel | W5 |
| 9 | -15V | blu | W8 |
| 10 | +6,2V | gry | W4 |

### U — PLUGGED TO DISPLAY PCB 1.780.245 J1

| PIN | SIGNAL | COLOR | TO |
|---|---|---|---|
| 1 | -15V | blu | W8 |
| 2 | SM | blk | Q13 |
| 3 | OV | wht | W7 |
| 4 | +6V | org | W1 |
| 5 | OV | blk | W3 |
| 6 | – | – | – |
| 7 | 11V~ | grn | W~2 |
| 8 | 11V~ | grn | W~2 |

### V — PLUGGED TO THRESHOLD CONTROL BOARD 1.780.235 J1

| PIN | SIGNAL | COLOR | TO |
|---|---|---|---|
| 1 | TM | yel | Q11 |
| 2 | PSTA | blk | Q2 |
| 3 | +15V | red | W2 |
| 4 | OV | wht | W7 |
| 5 | – | – | – |
| 6 | PSTE | wht | Q4 |

### W — SOLDRED TO POWER DISTRIBUTION PCB 1.780.190

| PIN | SIGNAL | COLOR | TO |
|---|---|---|---|
| ~1 | 19V~ | gry | T2, T3 |
| ~2 | 11V~ | grn | U7, U8 |
| ~3 | OV | blk | T1 |
| 1 | +6V | org | D14, O8, T6, U4 |
| 2 | +15V | red | A18, C1, D3, E4, G18, K14, L8, M1, O9, P10, T7, V3 |
| 3 | OV | blk | A1, L9, U5 |
| 4 | +6,2V | gry | T10 |
| 5 | OV | yel | K7, Q10, T8 |
| 6 | +22V | brn | L17, T5 |
| 7 | OV | wht | U3, V4 |
| 8 | -15V | blu | A16, C7, D2, E7, G17, L6, M4, O1, P11, T9, U1 |
| 9 | OV | blk | A11, A15 |
| 10 | -22V | grn | A3, K9 |
| 11 | +32V | vio | C3, D4, E3, G16, M5, O5 |

**WIRE HARNESS / REAR 1.780.166**

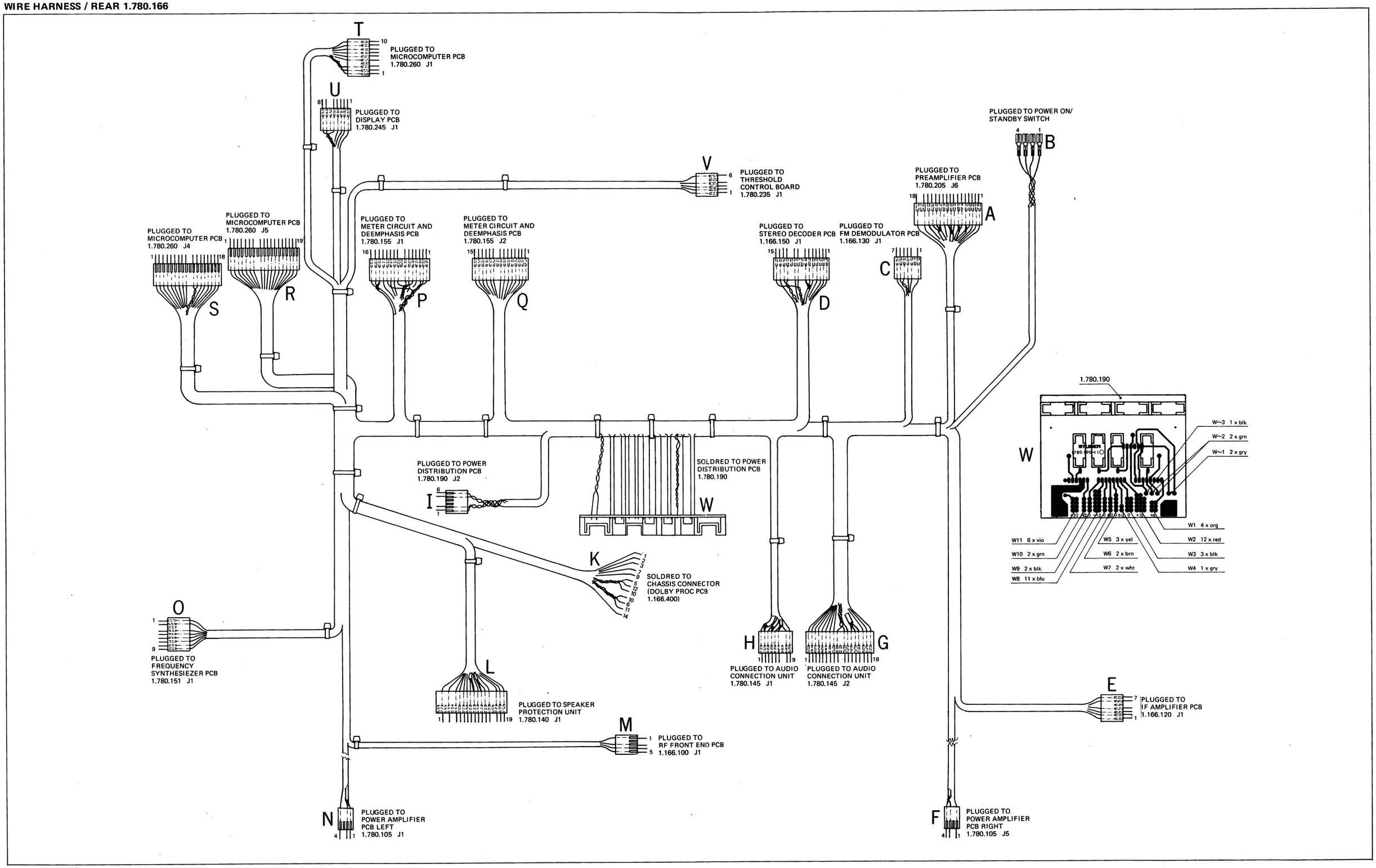

## FUNCTION DIAGRAM

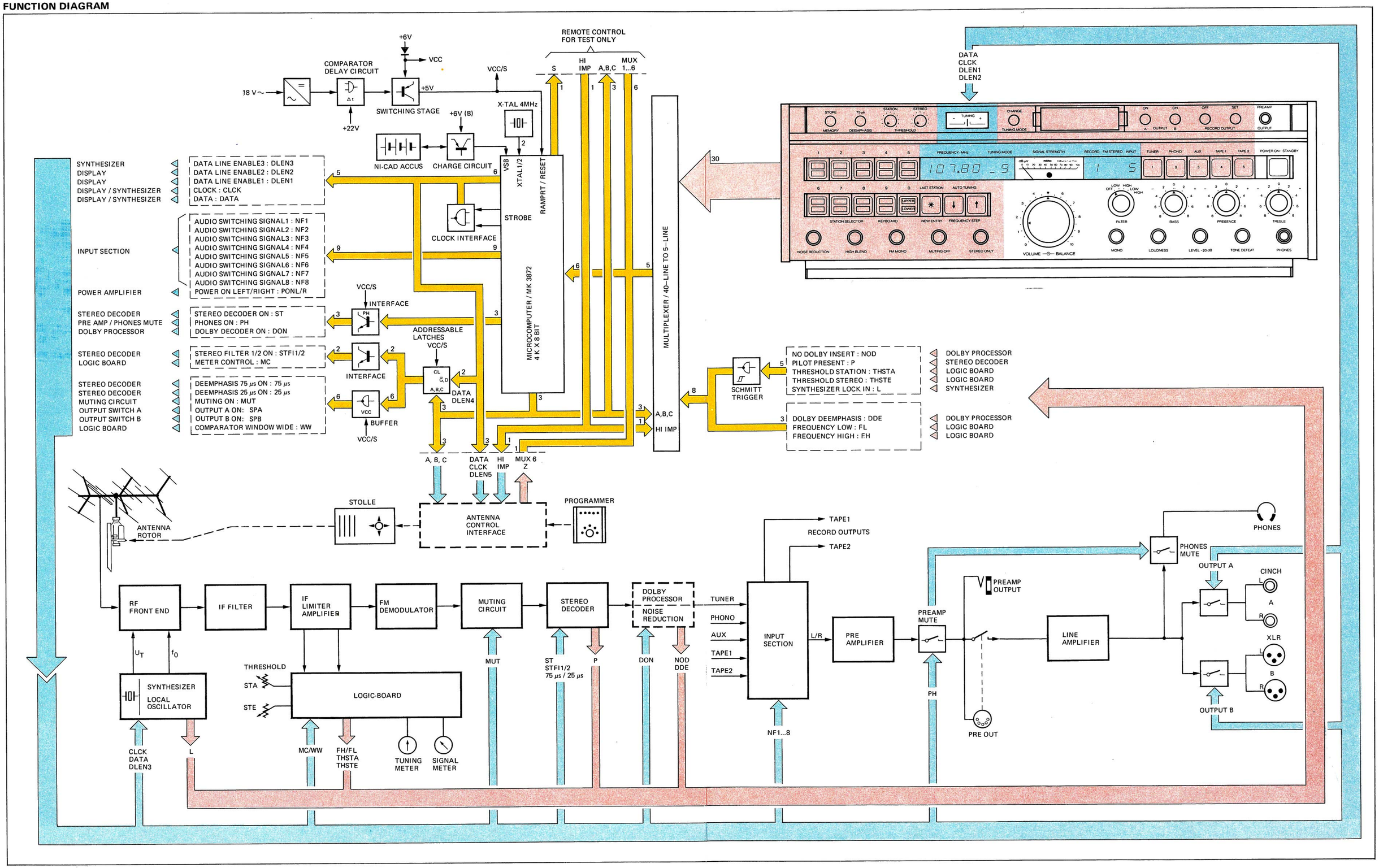


Noise reduction system manufactured under license from Dolby Laboratories. Dolby and the double-D symbol are trademarcs of Dolby Laboratories.

## POWER SUPPLY UNIT 1.166.200

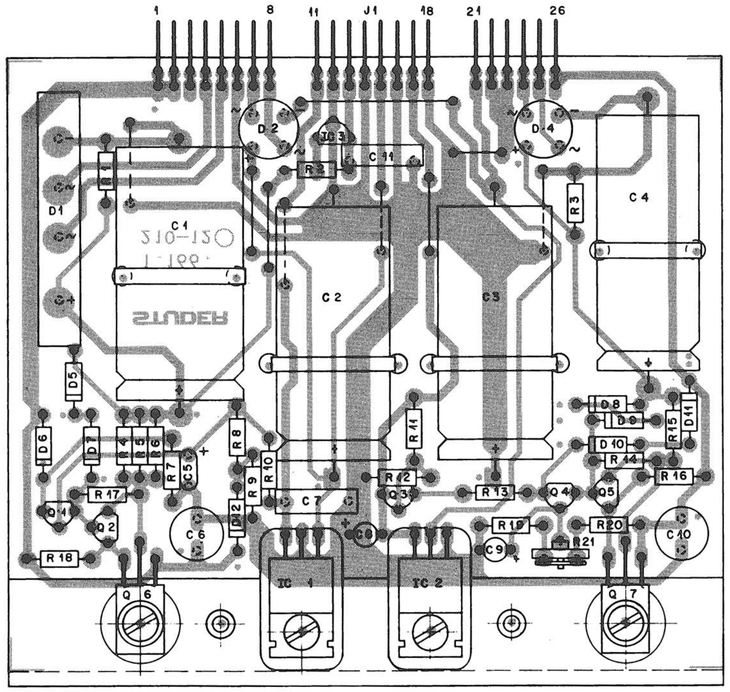


1.166.210 - 81

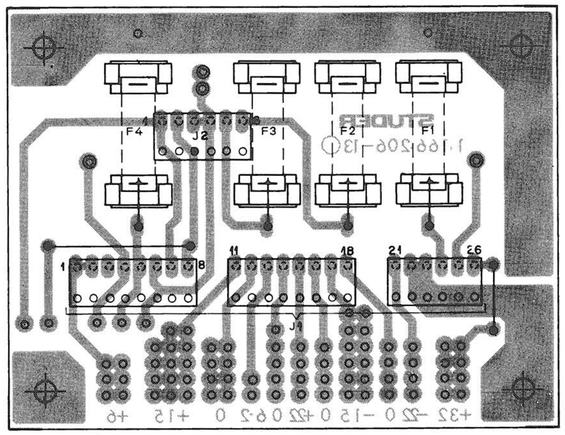


1.166.206-81

F1: 200mAT
F2,3: 800mAT
F4: 2AT
J1: 2 x 54.01.0289 8 POLE
1 x 54.01.0216 6 POLE
J2: 54.01.0216 6 POLE

| IND | POS NO | PART NO | VALUE | SPECIFICATIONS/EQUIVALENT | MFR |
|---|---|---|---|---|---|
| | C 1 | 59.25.3472 | 4700 µF | EL 16 V | |
| | C 2 | 59.25.4222 | 2200 µF | " 25 V | |
| | C 3 | " " " | " | " " " | |
| | C 4 | 59.25.6471 | 470 µF | " 63 V | |
| 4,1 | C 5 | 59.32.3103 | 0.01 µF | CER 40 V | |
| | C 6 | 59.22.5470 | 47 µF | EL 25 V | |
| | C 7 | 59.31.1104 | 0.1 µF | PE 100 V | |
| 6 | C 8 | 59.30.6339 | 3.3 µF | TA 35 V | |
| | C 9 | 59.30.6100 | 10 µF | " " | |
| | C 10 | 59.22.6220 | 22 µF | EL 40 V | |
| | C 11 | 59.31.1104 | 0.1 µF | PE 100 V | |
| | | | | | |
| 5 | D 1 | 70.01.0235 | BR. Rect. | B 80 C 3700/2200 Si | SI |
| | D 2 | 70.01.0223 | " " | B 250 C 800 Si | GI |
| 1 | D 3 | ——— | | | |
| | D 4 | 70.01.0223 | " " | " " " | |
| | D 5 | 50.04.0125 | 1N 4448 | Si Diode 100 V, 100 mA | GI |
| | D 6 | " " " | " | " " " | |
| | D 7 | " " " | " | " " " | |
| | D 8 | " " " | " | " " " | |
| | D 9 | " " " | " | " " " | |
| | D 10 | " " " | " | " " " | |
| | D 11 | 50.04.1108 | Z 5.6 | Zenerdiode 5.6 V 0.4 W 5% | |
| | D 12 | 50.04.0125 | 1N 4448 | Si Diode 100 V 100 mA | |
| | | | | | |
| | IC 1 | 50.05.0253 | 78 M 15 UC | +15 Voltage Regulator | F, TI |
| | IC 2 | 50.05.0252 | 79 M 15 AVC | −15 " " | " " |
| 3 | IC 3 | 50.10.0101 | 78 L 06 ACS | +6.2 " " | TI |
| | | | | | |
| | | | | | |

| IND | DATE | NAME |
|---|---|---|
| ○ | | |
| ○ | | |
| ⑥ | 3.6.80 | Rom. |
| ⑤ | 3.1.80 | Hä. |
| ○ | 6.10.77 | Bal. |

EL = Electrolytic
CER = Ceramic
PE = Polyester
TA = solid Tantalum
SI = Siemens
GI = General Instr.
F = Fairchild
TI = Texas Instr.

STUDER Power Supply PL 1.166.210-81 PAGE 1 OF 2

| IND | POS NO | PART NO | VALUE | SPECIFICATIONS/EQUIVALENT | MFR |
|---|---|---|---|---|---|
| | Q 1 | 50.03.0436 | BC 107 B | NPN Si | |
| | Q 2 | 50.03.0312 | BC 178 B | NPN Si | |
| | Q 3 | 50.03.0436 | BC 107 B | NPN Si | |
| | Q 4 | 50.03.0491 | BC 546 | NPN Si | |
| | Q 5 | 50.03.0492 | BC 446 | PNP Si | |
| | Q 6 | 50.03.0493 | BD 561 | NPN Si | |
| | Q 7 | 50.03.0445 | BD 177 | NPN Si | |
| | | | | | |
| | R 1 | 57.41.4102 | 1 kΩ | 5% | |
| 2,3 | R 2 | — | | " | |
| | R 3 | 57.41.4103 | 10 kΩ | " | |
| | R 4 | 57.41.4129 | 1.2 Ω | " | |
| | R 5 | 57.41.4129 | 1.2 Ω | " | |
| | R 6 | 57.41.4129 | 1.2 Ω | " | |
| | R 7 | 57.41.4821 | 820 Ω | " | |
| | R 8 | 57.41.4561 | 560 Ω | " | |
| | R 9 | 57.39.8451 | 8450 Ω | 1% MF | |
| | R 10 | 57.39.1432 | 14.3 kΩ | 1% MF | |
| | R 11 | 57.41.4102 | 1 kΩ | 5% | |
| | R 12 | 57.41.4103 | 10 kΩ | " | |
| | R 13 | 57.41.4103 | 10 kΩ | " | |
| | R 14 | 57.41.4102 | 1 kΩ | " | |
| | R 15 | 57.41.4339 | 3.3 Ω | " | |
| | R 16 | 57.41.4561 | 560 Ω | " | |
| | R 17 | 57.41.4102 | 1 kΩ | " | |
| | R 18 | 57.41.4561 | 560 Ω | " | |
| | R 19 | 57.41.4562 | 5.6 kΩ | " | |
| | R 20 | 57.41.4102 | 1 kΩ | " | |
| | R 21 | 58.02.4471 | 470 Ω | CF Potentiometer | |
| | | | | | |

| IND | DATE | NAME |
|---|---|---|
| ④ | | |
| ③ | | |
| ② | | |
| ① | | |
| ⑥ | 3.6.80 | Rom. |

CF = Carbon Film

STUDER Power Supply PL 1.166.210-81 PAGE 2 OF 2

POWER SUPPLY UNIT 1.166.200

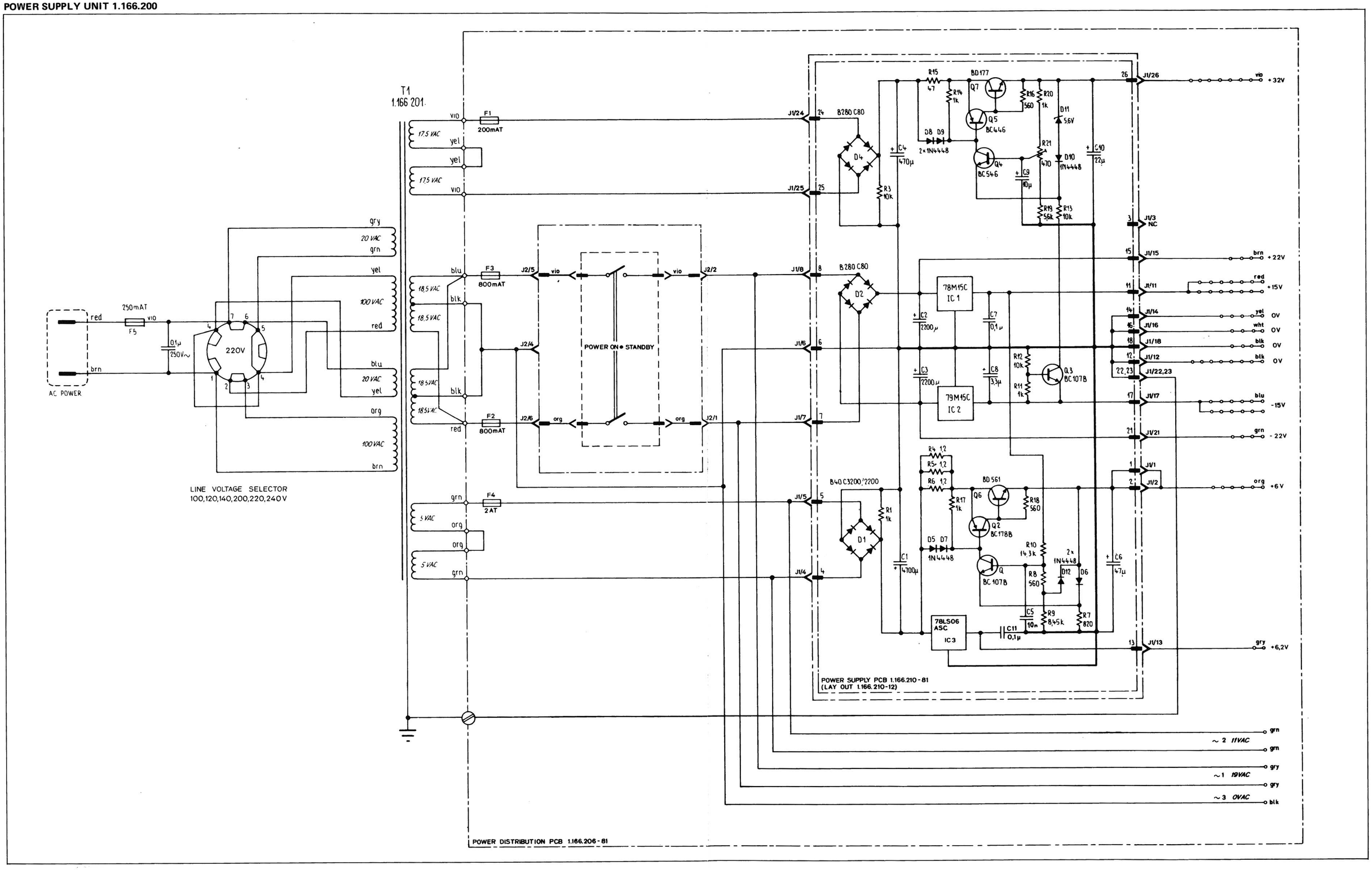

**PREAMPLIFIER PCB 1.780.835**

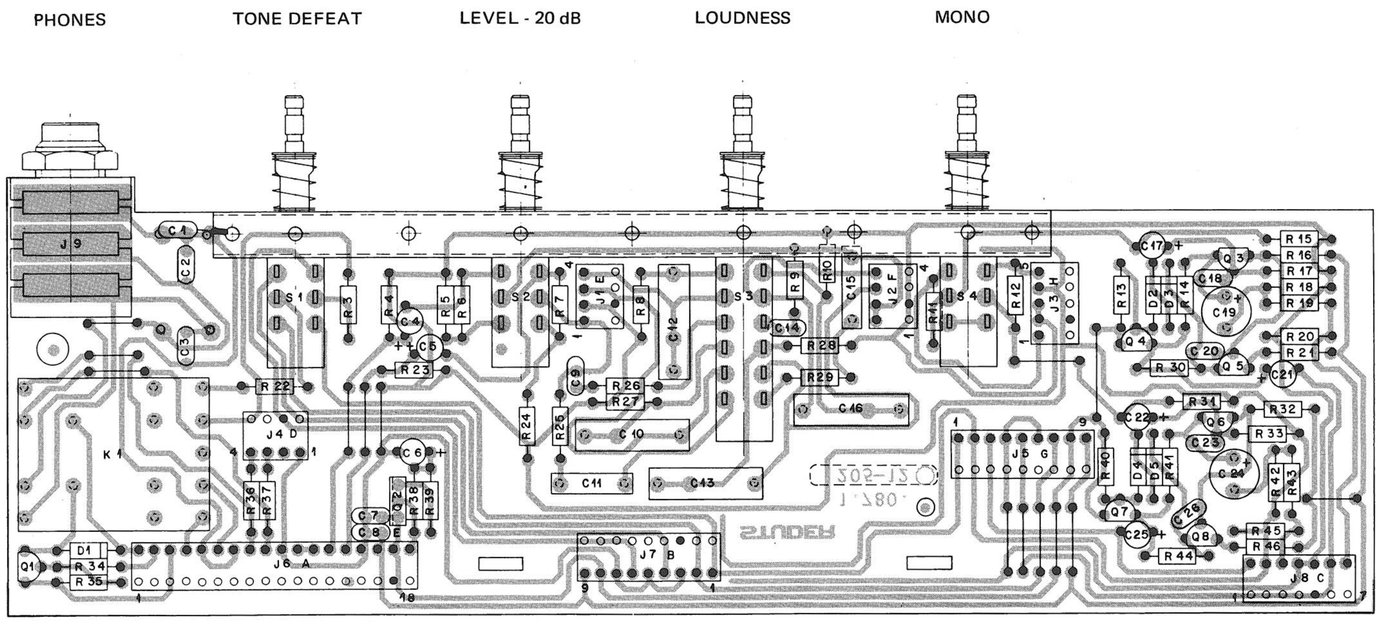


| IND | POS NO | PART NO | VALUE | SPECIFICATIONS/EQUIVALENT | MFR |
|---|---|---|---|---|---|
| | C1 | 59.32.3103 | 10 nF | 80% 50V CER | |
| | C2,3 | 59.32.4102 | 1 nF | 20% 50V CER | |
| | C4...C6 | 59.30.4220 | 22 µF | 20% 16V TA | |
| | C7,8 | 59.32.3103 | 10 nF | 80% 50V CER | |
| | C9 | 59.32.2681 | 680 pF | 10% 50V CER | |
| 1 | C10 | 59.31.6474 | 0,47 µF | 10% 100V MPETP | |
| | C11 | 59.11.6222 | 2,2 nF | " | |
| 1 | C12,13 | 59.31.6474 | 0,47 µF | " | |
| | C14 | 59.32.2681 | 680 pF | 10% 50V CER | |
| | C15 | 59.11.6222 | 2,2 nF | 10% 100V MPETP | |
| 1 | C16 | 59.31.6474 | 0,47 µF | " | |
| | C17 | 59.30.6109 | 1 µF | 20% 35V TA | |
| | C18 | 59.32.2681 | 680 pF | 10% 50V CER | |
| | C19 | 59.22.5470 | 47 µF | -10% 25V EL | |
| | C20 | 59.34.2220 | 22 pF | 5% 50V CER | |
| | C21 | 59.30.4220 | 22 µF | 20% 16V TA | |
| | C22 | 59.30.6109 | 1 µF | 20% 35V TA | |
| | C23 | 59.32.2681 | 680 pF | 10% 50V CER | |
| | C24 | 59.22.5470 | 47 µF | -10% 25V EL | |
| | C25 | 59.30.4220 | 22 µF | 20% 16V TA | |
| | C26 | 59.34.2220 | 22 pF | 5% 50V CER | |
| | | | | | |
| | D1...5 | 50.04.0125 | 1N4448 | 100 mA 75V | |
| | | | | | |
| | J1,2 | 54.01.0241 | 4 pole | CIS | AMP |
| | J3 | 54.01.0288 | 5 pole | " | " |
| | J4 | 54.01.0241 | 4 pole | " | " |
| | J5 | 54.01.0217 | 9 pole | " | " |
| | J6 | 54.01.0296 | 18 pole | " | " |
| | J7 | 54.01.0217 | 9 pole | " | " |

| IND | DATE | NAME |
|---|---|---|
| ④ | | |
| ③ | | |
| ② | | |
| ① | 5.3.80 | Rom. |
| ○ | 13.6.79 | He |

CER : Ceramic
TA : Tantalum
MPETP : Metallized Polyester
EL : Electrolytic

STUDER PREAMPLIFIER 1.780.835 PAGE 1 OF 3

| IND | POS NO | PART NO | VALUE | SPECIFICATIONS/EQUIVALENT | MFR |
|---|---|---|---|---|---|
| | J8 | 54.01.0218 | 7 pole | CIS | AMP |
| | J9 | 54.02.0104 | | 3 pole Jack 6,3 mm | |
| | | | | | |
| | K1 | 56.04.0141 | 24V; 1,2kΩ | AE 1354 6500 T | National |
| | | | | | |
| | Q1 | 50.03.0436 | BC237 B | NPN / BC107 | |
| | Q2 | 50.03.0478 | 2SC496-0 | NPN / BD139 | |
| | Q3 | 50.03.0436 | BC560C | low noise PNP / BC179 B | |
| | Q4,5 | 50.03.0437 | BC550C | " NPN / BC107 B | |
| | Q6 | 50.03.0436 | BC560C | " PNP / BC179 B | |
| | Q7,8 | 50.03.0437 | BC550C | " NPN / BC107 B | |
| | | | | | |
| | R1,2 | missing | | | |
| | R3 | 57.11.4101 | 100 Ω | 5% 0,25W CF | |
| | R4 | 57.11.4563 | 56 kΩ | " | |
| | R5 | 57.39.2611 | 2,61 kΩ | 1% 0,25W MF | |
| | R6,7 | 57.39.2052 | 20,5 kΩ | " | |
| | R8 | 57.11.4152 | 1,5 kΩ | 5% 0,25W CF | |
| | R9 | 57.11.4563 | 56 kΩ | " | |
| | R10 | 57.11.4152 | 1,5 kΩ | " | |
| | R11,12 | 57.11.4102 | 1 kΩ | " | |
| | R13 | 57.11.4563 | 56 kΩ | " | |
| | R14 | 57.11.4822 | 8,2 kΩ | " | |
| | R15 | 57.11.4224 | 220 kΩ | " | |
| | R16 | 57.11.4153 | 15 kΩ | " | |
| | R17 | 57.11.4224 | 220 kΩ | " | |
| | R18 | 57.11.4152 | 1,5 kΩ | " | |
| | R19 | 57.11.4272 | 2,7 kΩ | " | |
| | R20 | 57.11.4222 | 2,2 kΩ | " | |
| | R21 | 57.11.4470 | 47 Ω | " | |

| IND | DATE | NAME |
|---|---|---|
| ④ | | |
| ③ | | |
| ② | | |
| ① | 5.3.80 | Rom. |
| ○ | 13.6.79 | He |

CF : Carbon film
MF : Metalfilm

STUDER PREAMPLIFIER 1.780.835 PAGE 2 OF 3

| IND | POS NO | PART NO | VALUE | SPECIFICATIONS/EQUIVALENT | MFR |
|---|---|---|---|---|---|
| | R22 | 57.11.4101 | 100 Ω | 5% 0,25W CF | |
| | R23 | 57.11.4563 | 56 kΩ | " | |
| | R24 | 57.39.2611 | 2,61 kΩ | 1% 0,25W MF | |
| | R25 | 57.11.4562 | 5,6 kΩ | 5% 0,25W CF | |
| | R26 | 57.11.4563 | 56 kΩ | " | |
| | R27,28 | 57.11.4332 | 3,3 kΩ | " | |
| | R29 | 57.11.4562 | 5,6 kΩ | " | |
| | R30 | 57.11.4101 | 100 Ω | " | |
| | R31 | 57.11.4224 | 220 kΩ | " | |
| | R32 | 57.11.4153 | 15 kΩ | " | |
| | R33 | 57.11.4224 | 220 kΩ | " | |
| | R34 | 57.11.4153 | 15 kΩ | " | |
| | R35 | 57.11.4822 | 8,2 kΩ | " | |
| | R36...38 | 57.11.4222 | 2,2 kΩ | " | |
| | R39 | 57.11.4331 | 330 Ω | " | |
| | R40 | 57.11.4563 | 56 kΩ | " | |
| | R41 | 57.11.4822 | 8,2 kΩ | " | |
| | R42 | 57.11.4152 | 1,5 kΩ | " | |
| | R43 | 57.11.4272 | 2,7 kΩ | " | |
| | R44 | 57.11.4101 | 100 Ω | " | |
| | R45 | 57.11.4222 | 2,2 kΩ | " | |
| | R46 | 57.11.4470 | 47 Ω | " | |
| | | | | | |
| | S1...4 | 1.780.205.01 | | | |

| IND | DATE | NAME |
|---|---|---|
| ④ | | |
| ③ | | |
| ② | | |
| ① | 5.3.80 | Rom |
| ○ | 13.6.79 | He |

STUDER PREAMPLIFIER 1.780.835 PAGE 3 OF 3

**FILTER PCB 1.780.215-81**

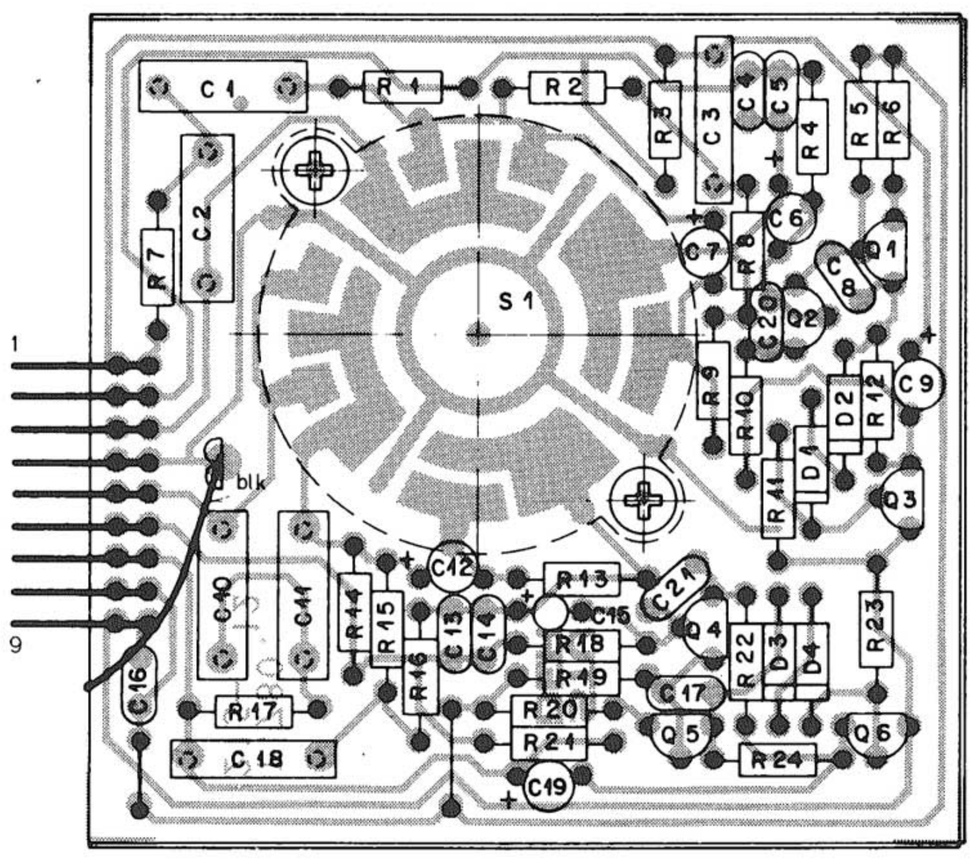




www.hifiengine.com

## LINE AMPLIFIER AND CONNECTION UNIT 1.780.840

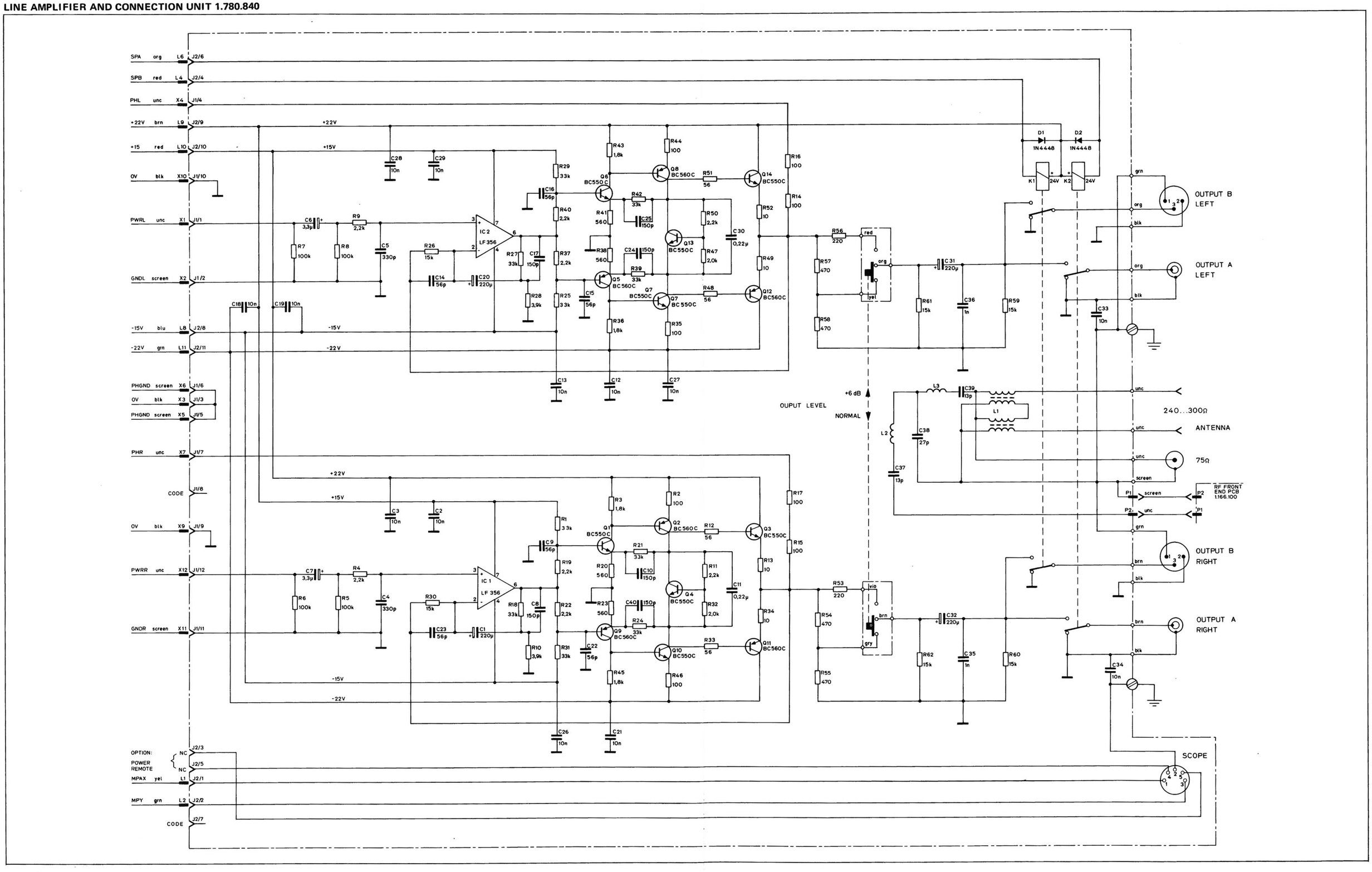

## WIRE HARNESS / REAR 1.780.820

### A — PLUGGED TO PREAMPLIFIER PCB 1.780.835 J6

| PIN | SIGNAL | COLOR | TO |
|---|---|---|---|
| 1 | OV | blk | W3 |
| 2 | PH | gry | S3 |
| 3 | -22V | grn | W10 |
| 4 | PHL | unc | X4 |
| 5 | PHGND | screen | X5 |
| 6 | PHR | unc | X7 |
| 7 | PHGND | screen | X6 |
| 8 | PRER | unc | H6 |
| 9 | PREL | red | H8 |
| 10 | PREGND | screen | H5 |
| 11 | OV | blk | W9 |
| 12 | OV | screen | G13 |
| 13 | MR | unc | G14 |
| 14 | ML | red | G15 |
| 15 | OV | blk | W9 |
| 16 | -15V | blu | W8 |
| 17 | – | – | – |
| 18 | +15V | red | W2 |

### B — PLUGGED TO POWER ON/ STANDBY SWITCH

| PIN | SIGNAL | COLOR | TO |
|---|---|---|---|
| 1 | – | vio | I 2 |
| 2 | – | vio | I 5 |
| 3 | – | org | I 6 |
| 4 | – | org | I 1 |

### C — PLUGGED TO FM DEMODULATOR PCB 1.166.130 J1

| PIN | SIGNAL | COLOR | TO |
|---|---|---|---|
| 1 | +15V | red | W2 |
| 2 | – | – | – |
| 3 | +32V | vio | W11 |
| 4 | MPAX | yel | L1 |
| 5 | MPX | wht | P2 |
| 6 | OV | blk | P3 |
| 7 | -15V | blu | W8 |

### D — PLUGGED TO STEREO DECODER PCB 1.166.150 J1

| PIN | SIGNAL | COLOR | TO |
|---|---|---|---|
| 1 | P | grn | S18 |
| 2 | -15V | blu | W8 |
| 3 | +15V | red | W2 |
| 4 | +32V | vio | W11 |
| 5 | R | red | P16 |
| 6 | L | unc | P15 |
| 7 | OV | screen | P14 |
| 8 | – | – | – |
| 9 | MPXM | gry | P12 |
| 10 | ST | yel | S2 |
| 11 | – | – | – |
| 12 | STFI 2 | grn | S12 |
| 13 | STFI 1 | grn | S11 |
| 14 | +6V | org | W1 |
| 15 | MPX | wht | P1 |

### E — PLUGGED TO IF AMPLIFIER PCB 1.166.120 J1

| PIN | SIGNAL | COLOR | TO |
|---|---|---|---|
| 1 | AGC | brn | M3 |
| 2 | T | wht | Q12 |
| 3 | +32V | vio | W11 |
| 4 | +15V | red | W2 |
| 5 | – | – | – |
| 6 | SS | gry | Q15 |
| 7 | -15V | blu | W8 |

### G — PLUGGED TO AUDIO CONNECTION UNIT 1.780.145 J2

| PIN | SIGNAL | COLOR | TO |
|---|---|---|---|
| 1 | NF1 | brn | S9 |
| 2 | NF2 | red | S8 |
| 3 | NF3 | org | S7 |
| 4 | NF4 | yel | S6 |
| 5 | NF5 | grn | R7 |
| 6 | NF6 | blu | R6 |
| 7 | NF7 | vio | R5 |
| 8 | NF8 | gry | R4 |
| 9 | OV | blk | K10 |
| 10 | – | – | – |
| 11 | TURS | red | K6 |
| 12 | TULS | brn | K11 |
| 13 | OV | screen | A12 |
| 14 | MR | unc | A13 |
| 15 | ML | red | A14 |
| 16 | +32V | vio | W11 |
| 17 | -15V | blu | W8 |
| 18 | +15V | red | W2 |

### H — PLUGGED TO AUDIO CONNECTION UNIT 1.780.145 J1

| PIN | SIGNAL | COLOR | TO |
|---|---|---|---|
| 1 | PWRR | unc | X12 |
| 2 | GNDR | screen | X11 |
| 3 | PWRL | unc | X1 |
| 4 | GNDL | screen | X2 |
| 5 | PREGND | screen | A10 |
| 6 | PRER | unc | A8 |
| 7 | – | – | – |
| 8 | PREL | red | A9 |
| 9 | – | – | – |

### I — PLUGGED TO POWER DISTRIBUTION PCB 1.166.206 - 81 J2

| PIN | SIGNAL | COLOR | TO |
|---|---|---|---|
| 1 | | org | B4 |
| 2 | | vio | B1 |
| 3 | – | – | – |
| 4 | – | – | – |
| 5 | | vio | B2 |
| 6 | | org | B3 |

### K — SOLDRED TO CHASSIS CONNECTOR (DOLBY PROC PCB 1.166.400)

| PIN | SIGNAL | COLOR | TO |
|---|---|---|---|
| 1 | NOD | wht | S17 |
| 2 | DON | blk | S1 |
| 3 | DDE | blu | R18 |
| 4 | – | – | – |
| 5 | RO | org | P6 |
| 6 | TURS | red | G11 |
| 7 | OV | yel | W5 |
| 8 | – | – | – |
| 9 | -22V | grn | W10 |
| 10 | OV | blk | G9 |
| 10 | OV | blk | P9 |
| 11 | TULS | brn | G12 |
| 12 | LO | grn | P5 |
| 13 | – | – | – |
| 14 | +15V | red | W2 |

### L — PLUGGED TO LINE AMPLIFIER AND CONNECTION UNIT 1.780.840 J2

| PIN | SIGNAL | COLOR | TO |
|---|---|---|---|
| 1 | MPAX | yel | C4 |
| 2 | MPY | grn | Q14 |
| 3 | – | – | – |
| 4 | SPB | red | S15 |
| 5 | – | – | – |
| 6 | SPB | org | S16 |
| 7 | – | – | – |
| 8 | -15V | blu | W8 |
| 9 | +22V | brn | W6 |
| 10 | +15V | red | W2 |
| 11 | -22V | grn | W10 |

### M — PLUGGED TO RF FRONT END PCB 1.166.100 J1

| PIN | SIGNAL | COLOR | TO |
|---|---|---|---|
| 1 | +15V | red | W2 |
| 2 | – | – | – |
| 3 | AGC | brn | E1 |
| 4 | -15V | blu | W8 |
| 5 | +32V | vio | W11 |

### O — PLUGGED TO FREQUENCY SYNTHESIEZER PCB 1.780.151 J1

| PIN | SIGNAL | COLOR | TO |
|---|---|---|---|
| 1 | -15V | blu | W8 |
| 2 | CLCK | brn | R1 |
| 3 | DLEN 3 | gry | R2 |
| 4 | DATA | yel | R3 |
| 5 | +32V | vio | W11 |
| 6 | – | – | – |
| 7 | LOC | grn | R12 |
| 8 | +6V | org | W1 |
| 9 | +15V | red | W2 |

### P — PLUGGED TO METER CIRCUIT AND DEEMPHASIS PCB 1.780.155 J1

| PIN | SIGNAL | COLOR | TO |
|---|---|---|---|
| 1 | MPX | wht | D15 |
| 2 | MPX | wht | C5 |
| 3 | OV | blk | C6 |
| 4 | 25µs | gry | R10 |
| 5 | LO | grn | K12 |
| 6 | RO | org | K5 |
| 7 | 75µs | wht | R9 |
| 8 | – | – | – |
| 9 | OV | blk | K10 |
| 10 | +15V | red | W2 |
| 11 | -15V | blu | W8 |
| 12 | MPXM | gry | D9 |
| 13 | MUT | vio | R11 |
| 14 | OV | screen | D7 |
| 15 | L | unc | D6 |
| 16 | R | red | D5 |

### Q — PLUGGED TO METER CIRCUIT AND DEEMPHASIS PCB 1.780.155 J2

| PIN | SIGNAL | COLOR | TO |
|---|---|---|---|
| 1 | THSTA | grn | R14 |
| 2 | PSTA | blk | V2 |
| 3 | THSTE | blu | R13 |
| 4 | PSTE | wht | V6 |
| 5 | FH | yel | R16 |
| 6 | FL | red | R17 |
| 7 | MC | brn | S13 |
| 8 | WW | org | S14 |
| 9 | – | – | – |
| 10 | OV | yel | W5 |
| 11 | TM | yel | V1 |
| 12 | T | wht | E2 |
| 13 | SM | blk | U2 |
| 14 | MPY | grn | L2 |
| 15 | SS | gry | E6 |

### R — PLUGGED TO MICROCOMPUTER PCB 1.780.260 J5

| PIN | SIGNAL | COLOR | TO |
|---|---|---|---|
| 1 | CLCK | brn | O2 |
| 2 | DLEN 3 | gry | O3 |
| 3 | DATA | yel | O4 |
| 4 | NF 8 | gry | G8 |
| 5 | NF 7 | vio | G7 |
| 6 | NF 6 | blu | G6 |
| 7 | NF 5 | grn | G5 |
| 8 | – | – | – |
| 9 | 75µs | wht | P7 |
| 10 | 25µs | gry | P4 |
| 11 | MUT | vio | P13 |
| 12 | LOC | grn | O7 |
| 13 | THSTE | blu | Q3 |
| 14 | THSTA | grn | Q1 |
| 15 | – | – | – |
| 16 | FH | yel | Q5 |
| 17 | FL | red | Q6 |
| 18 | DDE | blu | K3 |
| 19 | OV | wht | W7 |

### S — PLUGGED TO MICROCOMPUTER PCB 1.780.260 J4

| PIN | SIGNAL | COLOR | TO |
|---|---|---|---|
| 1 | DON | blk | K2 |
| 2 | ST | yel | D10 |
| 3 | PH | gry | A2 |
| 4 | – | – | – |
| 5 | – | – | – |
| 6 | NF 4 | yel | G4 |
| 7 | NF 3 | org | G3 |
| 8 | NF 2 | red | G2 |
| 9 | NF 1 | brn | G1 |
| 10 | – | – | – |
| 11 | STFI 1 | grn | D13 |
| 12 | STFI 2 | grn | D12 |
| 13 | MC | brn | Q7 |
| 14 | WW | org | Q8 |
| 15 | SPB | red | L4 |
| 16 | SPA | org | L6 |
| 17 | NOD | wht | K1 |
| 18 | P | grn | D1 |

### T — PLUGGED TO MICROCOMPUTER PCB 1.780.260 J1

| PIN | SIGNAL | COLOR | TO |
|---|---|---|---|
| 1 | OV | blk | W~3 |
| 2 | 19V~ | gry | W~1 |
| 3 | 19V~ | gry | W~1 |
| 4 | – | – | – |
| 5 | +22V | brn | W6 |
| 6 | +6V | org | W1 |
| 7 | +15V | red | W2 |
| 8 | OV | yel | W5 |
| 9 | -15V | blu | W8 |
| 10 | +6,2V | gry | W4 |

### U — PLUGGED TO DISPLAY PCB 1.780.245 J1

| PIN | SIGNAL | COLOR | TO |
|---|---|---|---|
| 1 | -15V | blu | W8 |
| 2 | SM | blk | Q13 |
| 3 | OV | wht | W7 |
| 4 | +6V | org | W1 |
| 5 | OV | blk | W3 |
| 6 | – | – | – |
| 7 | 11V~ | grn | W~2 |
| 8 | 11V~ | grn | W~2 |

### V — PLUGGED TO THRESHOLD CONTROL BOARD 1.780.235 J1

| PIN | SIGNAL | COLOR | TO |
|---|---|---|---|
| 1 | TM | yel | Q11 |
| 2 | PSTA | blk | Q2 |
| 3 | +15V | red | W2 |
| 4 | OV | wht | W7 |
| 5 | – | – | – |
| 6 | PSTE | wht | Q4 |

### W — SOLDRED TO POWER DISTRIBUTION PCB 1.166.206 - 81

| PIN | SIGNAL | COLOR | TO |
|---|---|---|---|
| ~1 | 19V~ | gry | T2, T3 |
| ~2 | 11V~ | grn | U7, U8 |
| ~3 | OV | blk | T1 |
| 1 | +6V | org | D14, O8, T6, U4 |
| 2 | +15V | red | A18, C1, D3, E4, G18, K14, L10, M1, O9, P10, T7, V3 |
| 3 | OV | blk | A1, U5 |
| 4 | +6,2V | gry | T10 |
| 5 | OV | yel | K7, Q10, T8 |
| 6 | +22V | brn | L9, T5 |
| 7 | OV | wht | U3, V4, R19 |
| 8 | -15V | blu | A16, C7, D2, E7, G17, L8, M4, O1, P11, T9, U1 |
| 9 | OV | blk | A11, A15, X3, X9, X10 |
| 10 | -22V | grn | A3, K9 L11 |
| 11 | +32V | vio | C3, D4, E3, G16, M5, O5 |

### X — PLUGGED TO LINE AMPLIFIER AND CONNECTION UNIT 1.780.840 J1

| PIN | SIGNAL | COLOR | TO |
|---|---|---|---|
| 1 | PWRL | unc | H3 |
| 2 | GNDL | screen | H4 |
| 3 | 0V | blk | W9 |
| 4 | PHL | unc | A4 |
| 5 | PHGND | screen | A5 |
| 6 | PHGND | screen | A7 |
| 7 | PHR | unc | A6 |
| 8 | – | – | – |
| 9 | 0V | blk | W9 |
| 10 | 0V | blk | W9 |
| 11 | GNDR | screen | H2 |
| 12 | PWRR | unc | H1 |

**WIRE HARNESS / REAR 1.780.820**

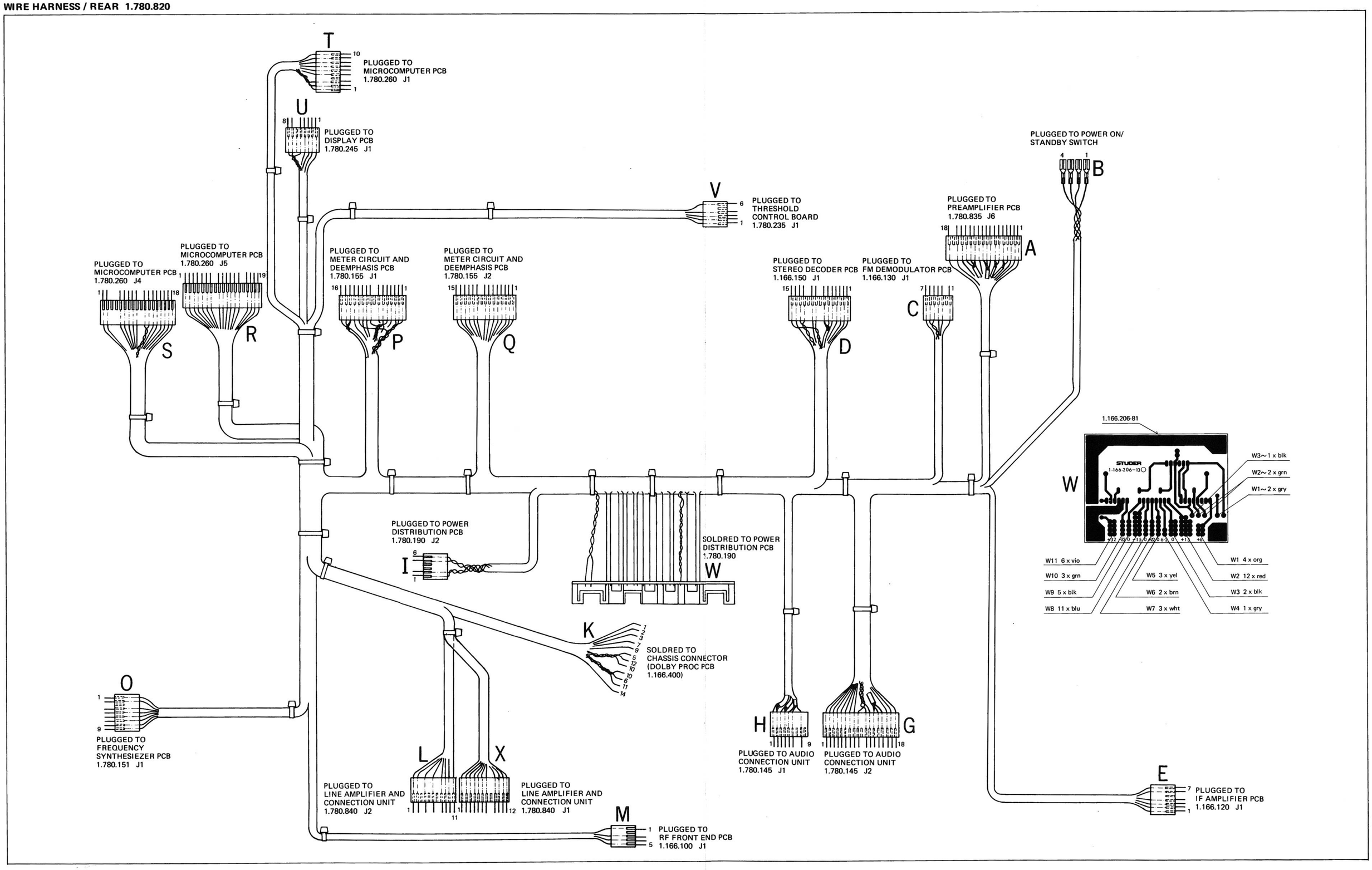

## VOCABULARY OF ABBREVIATIONS

| | |
|---|---|
| A | 3 - BIT MULTIPLEXER |
| AGC | AUTOMATIC GAIN CONTROL (GAIN CONTROL VOLTAGE) |
| AUX | PUSH BUTTON AUXILIARY |
| B | 3 - BIT MULTIPLEXER |
| C | 3 - BIT MULTIPLEXER |
| CHTM | PUSH BUTTON CHANGE TUNING MODE |
| CLCK | CLOCK SA 1060/ SA 1056 |
| DATA | DATA SIGNAL |
| DC | DC AT POWER AMPLIFIER OUTPUT |
| DDE | DOLBY DEEMPHASIS |
| DLEN 1. . . 3 | DATA LINE ENABLE 1 . . . 3 |
| DON | DOLBY DECODER ON |
| DOWN | PUSH BUTTON AUTO TUNING / FREQUENCY STEP DOWN |
| FH | SIGNAL FREQUENCY HIGH |
| FL | SIGNAL FREQUENCY LOW |
| FPL | FRONT PANEL LEFT (PREAMPLIFIER OUTPUT) |
| FPR | FRONT PANEL RIGHT (PREAMPLIFIER OUTPUT) |
| GL | GROUND LEFT (TONE CONTROL) |
| GNDL | GROUND LEFT (POWER AMPLIFIER) |
| GNDR | GROUND RIGHT (POWER AMPLIFIER) |
| GR | GROUND RIGHT (TONE CONTROL) |
| H | OVERHEAT |
| HIBL | PUSH BUTTON HIGH BLEND |
| HI-IMP. | HIGH IMPEDANCE |
| KS 0 . . . 9 | KEYBOARD 0 . . . 9 |
| L | LEFT OUTPUT (AUDIO SIGNAL STEREO DECODER) |
| LIN | LEFT INPUT (AUDIO SIGNAL TONE CONTROL) |
| LO | LEFT OUTPUT (AUDIO SIGNAL METER AND DEEMPHASIS PCB) |
| LOC | SYNTHESIZER LOCK IN |
| LOUT | LEFT OUTPUT (AUDIO SIGNAL TONE CONTROL) |
| LSNE | PUSH BUTTON LAST STATION / NEW ENTRY |
| MC | METER CONTROL |
| ML | MONITOR LEFT (AUDIO SIGNAL OUTPUT AUDIO CONNECTION UNIT) |
| MOFF | PUSH BUTTON MUTING OFF |
| MONO | PUSH BUTTON FM MONO |
| MPAX | MULTIPATH X-OUTPUT |
| MPXM | MULTIPLEX MUTING |
| MPX | MULTIPLEX SIGNAL |
| MPY | MULTIPATH Y-OUTPUT |
| MR | MONITOR RIGHT (AUDIO SIGNAL OUTPUT AUDIO CONNECTION UNIT) |
| MUT | CONTROL SIGNAL MUTING |
| NF 1 . . . 8 | AF-SWITCH CONTROL SIGNAL 1 . . . 8 |
| NOD | NO DOLBY |
| NR | PUSH BUTTON NOISE REDUCTION |
| OUTL | OUTPUT LEFT (POWER AMPLIFIER) |
| OUTR | OUTPUT RIGHT (POWER AMPLIFIER) |
| P | PILOT RESENT |
| PH | PHONES ON |
| PHGND | PHONE GROUND |
| PHL | PHONE LEFT (OUTPUT SPEAKER PROTECTION UNIT) |
| PHO | PUSH BUTTON PHONO |
| PHR | PHONE RIGHT (OUTPUT SPEAKER PROTECTION UNIT) |
| PONL | POWER ON LEFT |
| PONR | POWER ON RIGHT |
| PREL | PREAMPLIFIER OUTPUT LEFT |
| PRER | PREAMPLIFIER OUTPUT RIGHT |
| PSTA | POTENTIOMETER THRESHOLD STATION |
| PSTE | POTENTIOMETER THRESHOLD STEREO |
| PWRL | POWER LEFT (AUDIO SIGNAL INPUT POWER AMPLIFIER) |
| PWRR | POWER RIGHT (AUDIO SIGNAL INPUT POWER AMPLIFIER) |
| R | RIGHT OUTPUT (AUDIO SIGNAL STEREO DECODER) |
| RECOFF | PUSH BUTTON RECORD OUTPUT / OFF |
| RECSET | PUSH BUTTON RECORD OUTPUT / SET |
| RIN | RIGHT INPUT (AUDIO SIGNAL TONE CONTROL) |
| RO | RIGHT OUTPUT (AUDIO SIGNAL METER AND DEEMPHASIS PCB) |
| ROUT | RIGHT OUTPUT ( AUDIO SIGNAL TONE CONTOL) |
| SM | SIGNAL METER (SIGNAL VOLTAGE) |
| SPA | CONTROL SIGNAL OF SPEAKER-RELAY A |
| SPB | CONTROL SIGNAL OF SPEAKER-RELAY B |
| SS | SIGNAL STRENGTH (SIGNAL VOLTAGE) |
| ST | STEREO DECODER ON |
| STFI 1 | STEREO FILTER 1 ON |
| STFI 2 | STEREO FILTER 2 ON |
| STLY | PUSH BUTTON STEREO ONLY |
| STME | PUSH BUTTON STORE MEMORY |
| T | DISCRIMINATOR VOLTAGE |
| TA 1 | PUSH BUTTON TAPE 1 |
| TA 2 | PUSH BUTTON TAPE 2 |
| THSTA | THRESHOLD STATION |
| THSTE | THRESHOLD STEREO |
| TM | TUNING METER |
| TSPA | PUSH BUTTON SPEAKER A ON |
| TSPB | PUSH BUTTON SPEAKER B ON |
| TU | PUSH BUTTON TUNER |
| TULS | TUNER LEFT SINGLE (AUDIO SIGNAL OUTPUT DOLBY PROCESSOR PCB) |
| TURS | TUNER RIGHT SINGLE (AUDIO SIGNAL OUTPUT DOLBY PROCESSOR PCB) |
| T 75 µS | PUSH BUTTON DEEMPHASIS 75 µS |
| UP | PUSH BUTTON AUTO TUNING / FREQUENCY STEP UP |
| WW | COMPERATOR WINDOW WIDE |
| Y-OSC 1 | LOCAL OSCILLATOR VOLTAGE 1 |
| Y-OSC 2 | LOCAL OSCILLATOR VOLTAGE 2 |
| Y-TUNING | TUNING VOLTAGE |
| Y 1 - IF | INTERMEDIATE FREQUENCY 1 |
| Y 2 - IF | INTERMEDIATE FREQUENCY 2 |
| Z | ROTOR CONTROL (OUTPUT SIGNAL) |
| 25 µS | DEEMPHASIS 25 µS ON |
| 75 µS | DEEMPHASIS 75 µS ON |
| – UBAT | – BATTERY VOLTAGE |
| + UBAT | + BATTERY VOLTAGE |