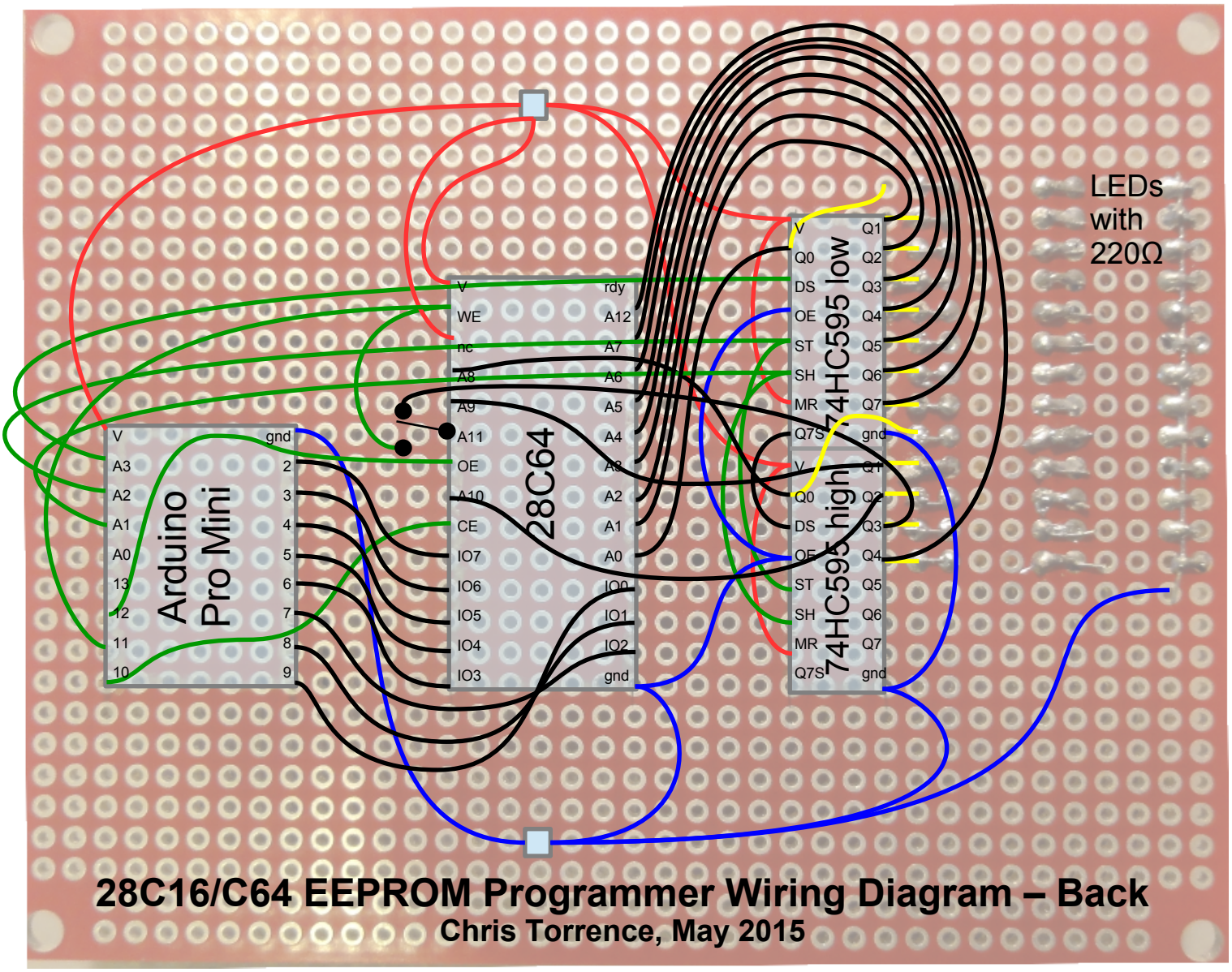

28C16/C64 EEPROM Programmer Wiring Diagram – Back

Chris Torrence, May 2015