AUTOCAD

ARCHITECTURAL & STEEL

by CHRIS SISON

MACHINE VISE

DETAIL & ASSEMBLY

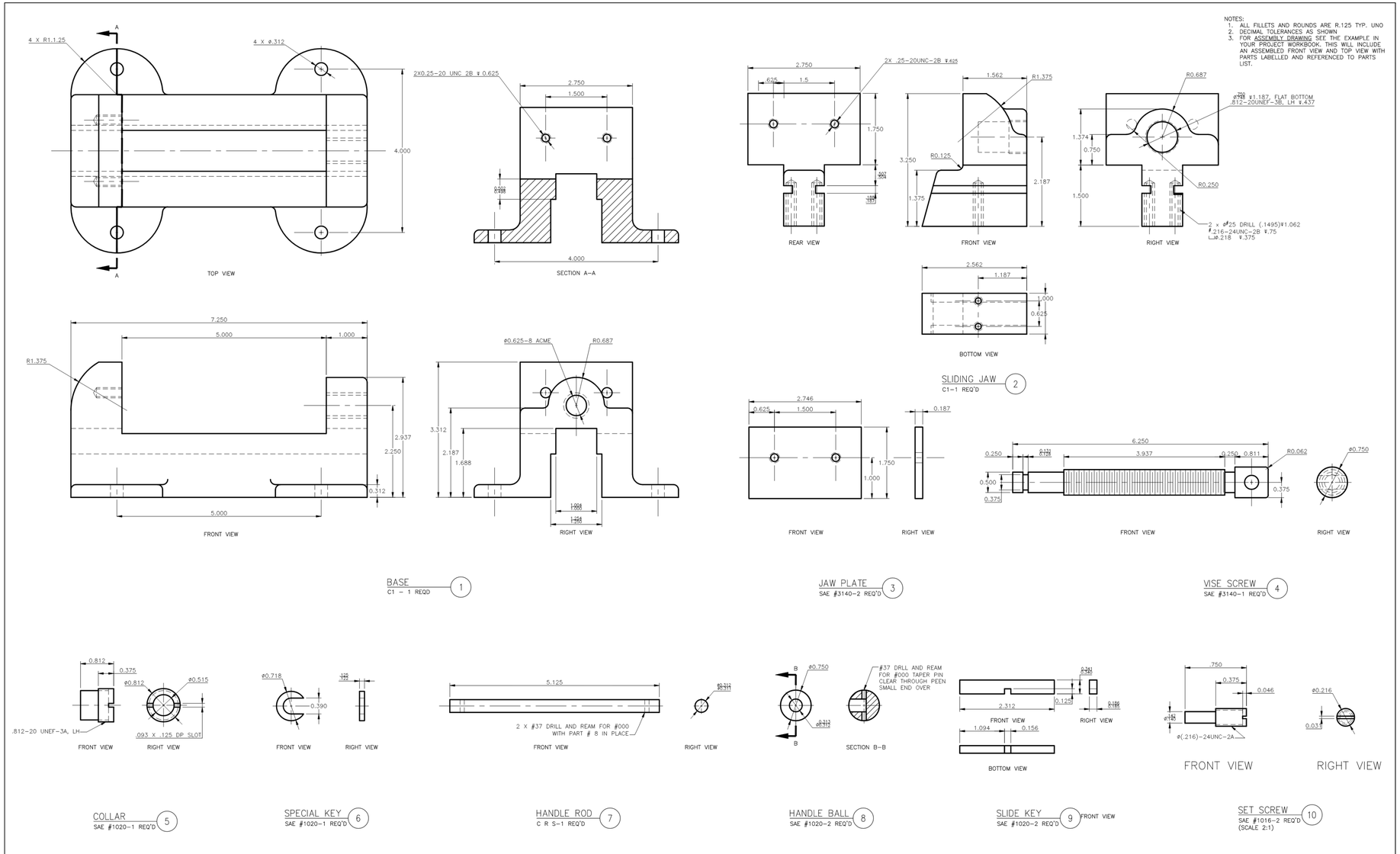

1	MV-D-001	MACHINE VISE ASSEMBLY	
NO.	DRAWING NO.	DESCRIPTION	REFERENCE

PROJECT: DETAIL AND ASSEMBLY

VANCOUVER COMMUNITY COLLEGE

TITLE: MACHINE VISE

DRAWN	CS
SCALE	FULL SIZE UNO
CHECKED	
APPROVED	
DATE	10-13-2022

DRAWING NO.: MV-D-001

REV.: 0

SECTION VIEW

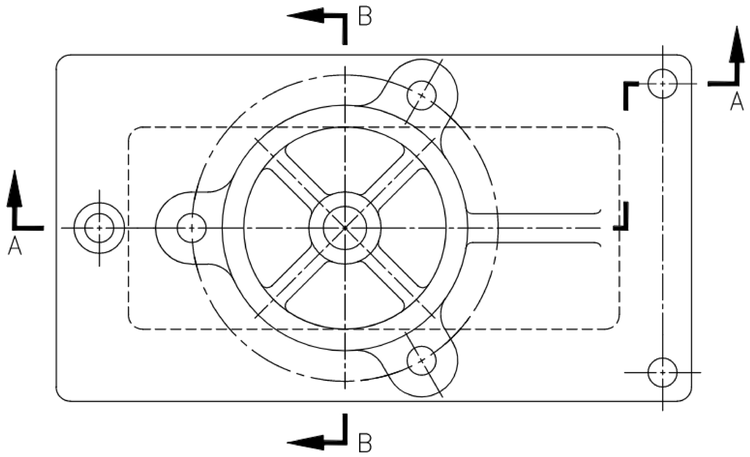

TOP VIEW

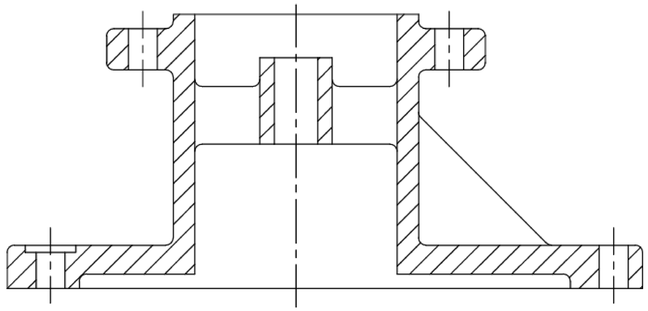

SECTION A–A

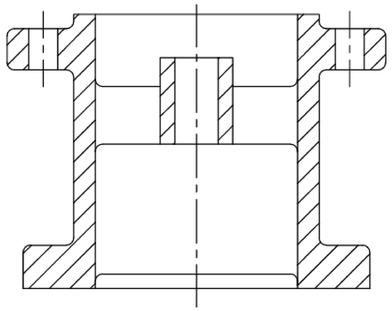

SECTION B–B

VANCOUVER COMMUNITY COLLEGE	TITLE	NAME	DWG NO.	REV
	SECTION VIEW TEST	CS	1011–1	△
		DATE 10–06–2022	SCALE FULL	

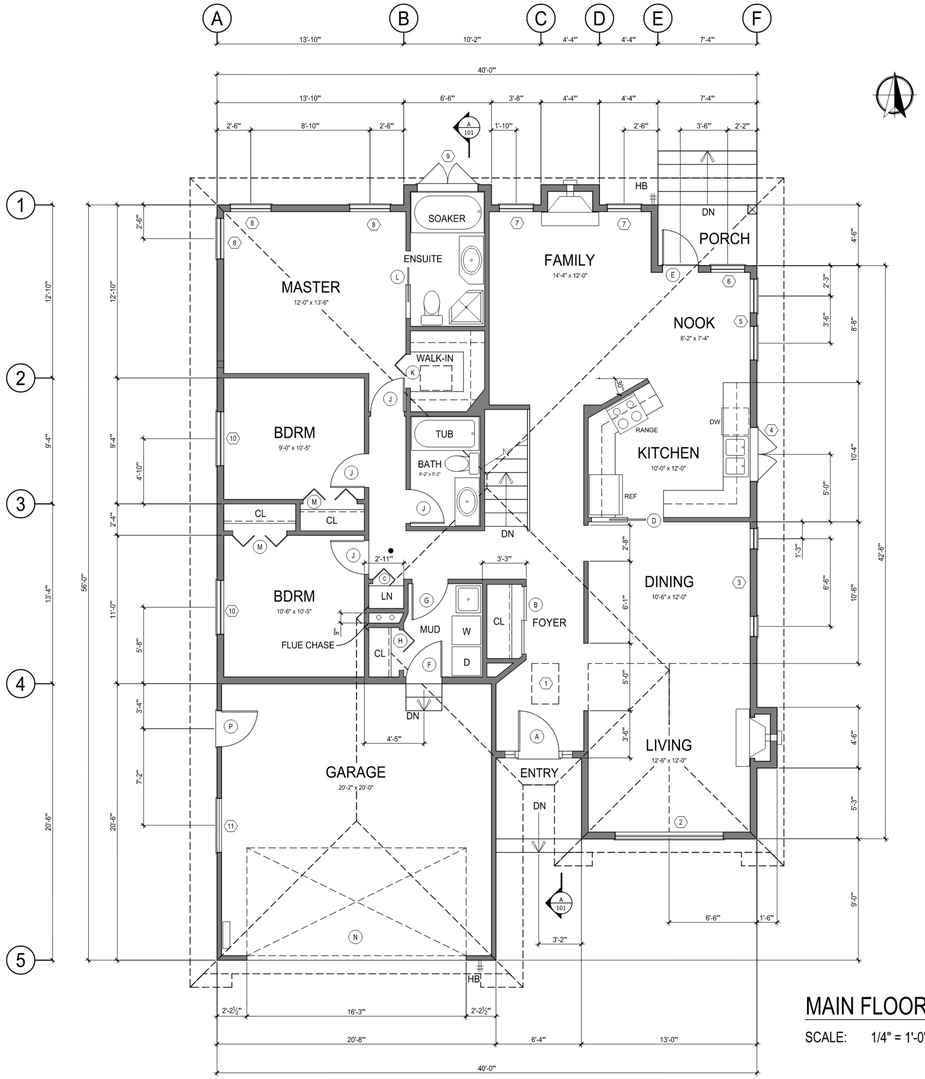

MAIN FLOOR PLAN

SCALE: 1/4" = 1'-0"

WINDOW SCHEDULE

TAG	RO SIZE	TYPE	QTY
1	2'-0" x 3'-0"	SKYLIGHT	1
2	8'-0" x 6'-0"	PICTURE, ARCHED, PROJECTED SILL	1
3	1'-6" x 5'-0"	DOUBLE HUNG, PROJECTED SILL	2
4	4'-0" x 3'-6"	CASEMENT, PROJECTED SILL	1
5	2'-6" x 5'-0"	AWNING ON LOWER PORTION, PROJECTED SILL	2
6	2'-6" x 5'-0"	PICTURE, SAFETY GLASS, PROJECTED SILL	1
7	2'-6" x 5'-0"	DOUBLE HUNG, PROJECTED SILL	2
8	3'-0" x 5'-0"	DOUBLE HUNG, PROJECTED SILL	3
9	4'-6" x 3'-6"	CASEMENT, PROJECTED SILL, SAFETY GLASS	1
10	4'-0" x 3'-6"	DOUBLE HUNG, PROJECTED SILL	2
11	4'-0" x 3'-0"	PICTURE, PROJECTED SILL	1

DOOR SCHEDULE

TAG	RO SIZE	TYPE	QTY
A	5'-0" x 6'-8"	60 IN. WIDE EXT UNIT INCL LIGHTS ON BOTH SIDES	1
B	5'-0" x 6'-8"	SLIDING WITH MIRROR FOR CLOSET	1
C	2'-0" x 6'-8"	BI-FOLD FOR LINEN CLOSET	1
D	2'-8" x 6'-8"	POCKET, HOLLOW CORE	1
E	2'-8" x 6'-8"	EXTERIOR, FRENCH	1
F	2'-8" x 6'-8"	EXT SOLID CORE, WEATHER STRIPPING & SELF CLOSER	1
G	2'-8" x 6'-8"	HOLLOW CORE	1
H	3'-0" x 6'-8"	BI-FOLD FOR CLOSET	1
J	2'-6" x 6'-8"	HOLLOW CORE	4
K	30" x 6'-8"	BI-FOLD FOR WALK-IN CLOSET	1
L	2'-6" x 6'-8"	POCKET, HOLLOW CORE FOR EN-SUITE	1
M	4'-0" x 6'-8"	BI-FOLD FOR CLOSET (2-24" UNITS)	2
N	16'-0" x 8'-0"	OVERHEAD GARAGE DOOR	1
P	2'-8" x 6'-8"	EXT SOLID CORE, W/ 20 MIN FIRE RATING	1

WALL SCHEDULE

	EXTERIOR WALL (2x6)
	EXTERIOR WALL (2x4)
	BEARING WALL (2x4)
	R12 RIGID INSULATION 24" BELOW GRADE
	PLUMBING WALL
	PONY WALL

GENERAL NOTES:

1. All construction shall comply with part 9 of the building code of the province of B.C. Residential Standards, except where local bylaws take precedence.

2. The contractor shall ensure that the construction complies with all national, provincial, and local regulations.

3.The contractor shall verify all dimensions and materials shown on drawings before proceeding.

4.The contractor shall check all existing grades and locations of city services prior to construction.

5. Fire protection shall conform to section 9.10 of the BCBC.

6. Stairs & handrails shall comply with section 9.8 of the BCBC.

7. The design of structural framing members, except trusses, has been based on SPF No.1 or No.2 as shown in the span tables for joists and beams.

8. Structural concrete to develop 20 mpa compressive strength within 28 days except concrete used for garage and exterior stairs which shall have a minimum compressive strength or 30mpa at 28 days.

9. All exterior concrete slabs shall have air-entrainment.

10. Wood in contact with concrete shall be pressure treated on 45-lb. tar saturated felt or polyethylene sill gasket.

11. Beams shall have even and level bearing and shall have not less than 3" length of bearing at end supports.

12. Individual members of a built up beam shall be nailed together with a double row of nails not less than 3 ½" in length, spaced not more than 18" apart in each row with the end nails located 4" to 6" from the end of each piece.

13. ■ indicates point load on plans.

14. Exterior dimensions are to outside of wall sheathing.

15. Dimensions take precedence over scale.

16. Floor joists shall have bridging rows @ 7'-0" max. o.c.

17. All interior, exterior and load bearing lintels shall be 2-2x10 UNO.

18. The width or diameter of wood columns shall be not less than the width of the supported member.

19. Floor areas finished with sheet vinyl or ceramic tiles to have an additional sheet of particle board, min. ¼ thick over subfloor.

20. Wall sheathing shall be either ext. grade plywood or OSB.

21. ♦ indicates smoke alarm on plans. (use our block from K: drive)

SINGLE FAMILY RESIDENCE

MAIN FLOOR PLAN

D:\VCC\LEVEL 2\1274\CHRIS-A-1274-SINGLE FAM.DWG

NO.	DRAWING	REFERENCE	NO.	DATE	REVISION	APP
4	A-1274-104	SECTION & DETAILS				
3	A-1274-103	ELEVATIONS				
2	A-1274-102	FOUNDATION PLAN				
1	A-1274-101	MAIN FLOOR & BASEMENT PLAN				

COURSE: 1274 SINGLE FAM RESIDENCE

VANCOUVER COMMUNITY COLLEGE — DRAFTING DEPT.

PROJECT: PROPOSED RESIDENCE OF CHRIS

PLOT PLAN

		DRAWING NO.	REV.
DRAWN	CHRIS RS	A-1274-100	P4
SCALE	1/4" = 1'-0"		
INST.	FF		
DATE	DEC 07 2022		

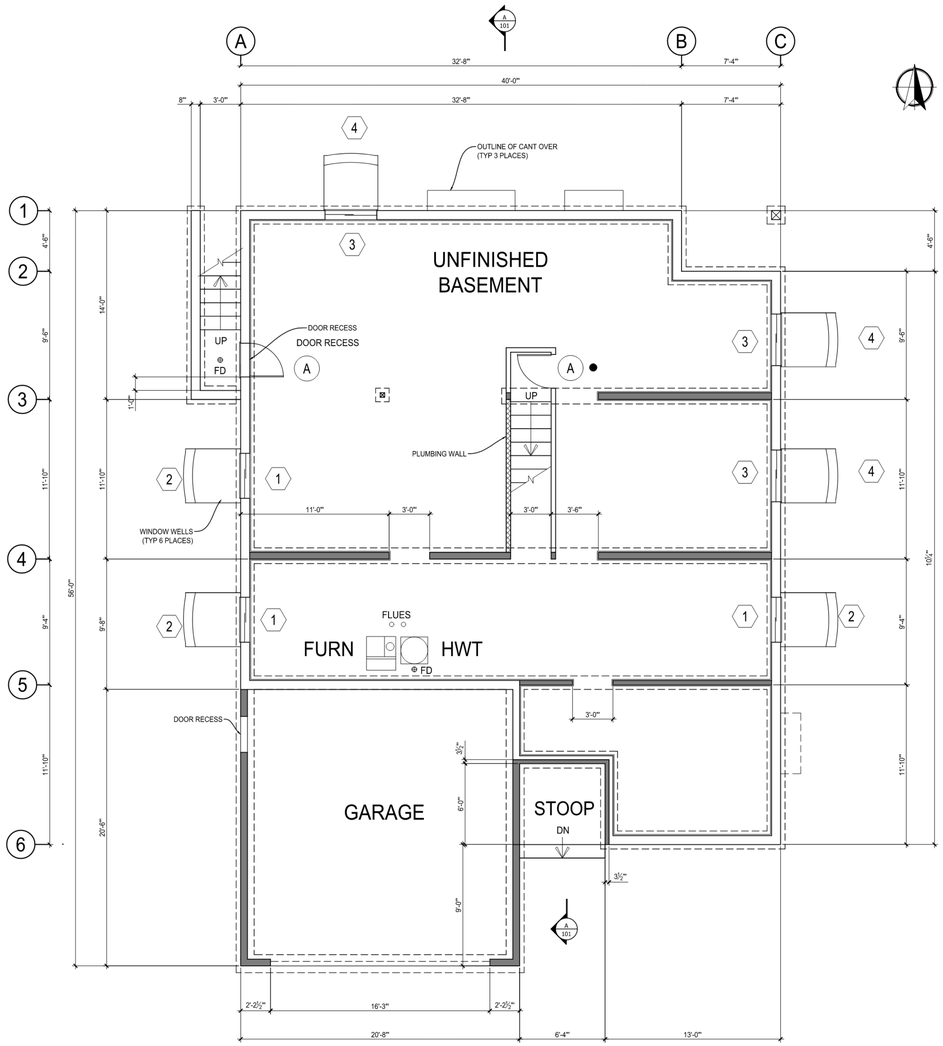

BASEMENT FLOOR PLAN

SCALE: 1/4" = 1'-0"

WINDOW SCHEDULE

TAG	RO SIZE	TYPE	QTY
1	3'-4" x 4'-0"	DOUBLE HUNG, PROJECTED SILL	3
2	3'-10" x 5'-0"	DOUBLE HUNG, PROJECTED SILL, WITH SCAPEWEL	3
3	4'-0" x 3'-6"	WINDOW WELL MODEL 4862-42 AND COVER	6

DOOR SCHEDULE

TAG	RO SIZE	TYPE	QTY
A	2'-6" x 6'-8"	HOLLOW, CORE	1
B	3'-0" x 6'-8"	EXTERIOR SOLID CORE	1

WALL SCHEDULE

	EXTERIOR WALL (2x6)
	EXTERIOR WALL (2x4)
	BEARING WALL (2x4)
	R12 RIGID INSULATION 24" BELOW GRADE
	PLUMBING WALL
	PONY WALL

GENERAL NOTES:

1. All construction shall comply with part 9 of the building code of the province of B.C. Residential Standards, except where local bylaws take precedence.

2. The contractor shall ensure that the construction complies with all national, provincial, and local regulations.

3.The contractor shall verify all dimensions and materials shown on drawings before proceeding.

4.The contractor shall check all existing grades and locations of city services prior to construction.

5. Fire protection shall conform to section 9.10 of the BCBC.

6. Stairs & handrails shall comply with section 9.8 of the BCBC.

7. The design of structural framing members, except trusses, has been based on SPF No.1 or No.2 as shown in the span tables for joists and beams.

8. Structural concrete to develop 20 mpa compressive strength within 28 days except concrete used for garage and exterior stairs which shall have a minimum compressive strength or 30mpa at 28 days.

9. All exterior concrete slabs shall have air-entrainment.

10. Wood in contact with concrete shall be pressure treated on 45-lb. tar saturated felt or polyethylene sill gasket.

11. Beams shall have even and level bearing and shall have not less than 3" length of bearing at end supports.

12. Individual members of a built up beam shall be nailed together with a double row of nails not less than 3 ½" in length, spaced not more than 18" apart in each row with the end nails located 4" to 6" from the end of each piece.

13. ● indicates point load on plans.

14. Exterior dimensions are to outside of wall sheathing.

15. Dimensions take precedence over scale.

16. Floor joists shall have bridging rows @ 7'-0" max. o.c.

17. All interior, exterior and load bearing lintels shall be 2-2x10 UNO.

18. The width or diameter of wood columns shall be not less than the width of the supported member.

19. Floor areas finished with sheet vinyl or ceramic tiles to have an additional sheet of particle board, min. ¼ thick over subfloor.

20. Wall sheathing shall be either ext. grade plywood or OSB.

21. ● indicates smoke alarm on plans. (use our block from K: drive)

SINGLE FAMILY RESIDENCE

BSMT FLOOR PLAN

D:\VCC\LEVEL 2\1274\CHRIS-A-1274-SINGLE FAM.DWG

NO.	DRAWING	REFEREENCE	NO.	DATE	REVISION	APP.
4	A-1274-104	SECTION & DETAILS				
3	A-1274-103	ELEVATIONS				
2	A-1274-102	FOUNDATION PLAN				
1	A-1274-101	MAIN FLOOR & BASEMENT PLAN				

COURSE: 1274 SINGLE FAM RESIDENCE

VANCOUVER COMMUNITY COLLEGE — DRAFTING DEPT.

PROJECT: PROPOSED RESIDENCE OF CHRIS

PLOT PLAN

DRAWN:	CHRIS RS	DRAWING NO.	REV.
SCALE:	1/4" = 1'-0"	A-1274-100	P4
INST:	FF		
DATE:	DEC 07 2022		

NOTES
FOR GENERAL NOTES, SEE REF NO.1

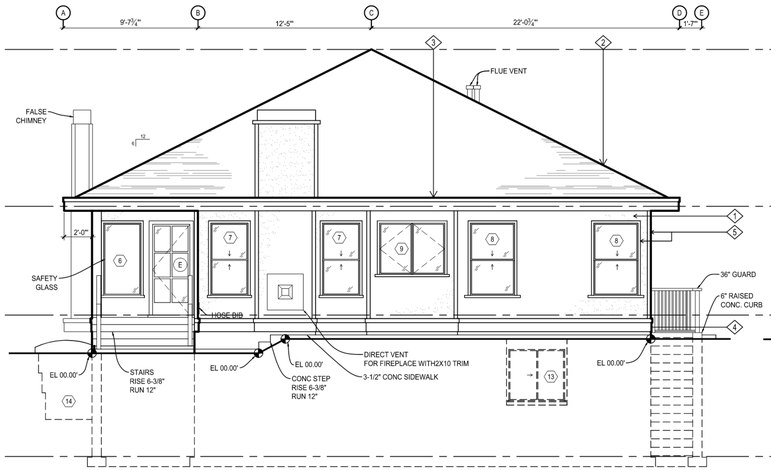

NORTH ELEVATION

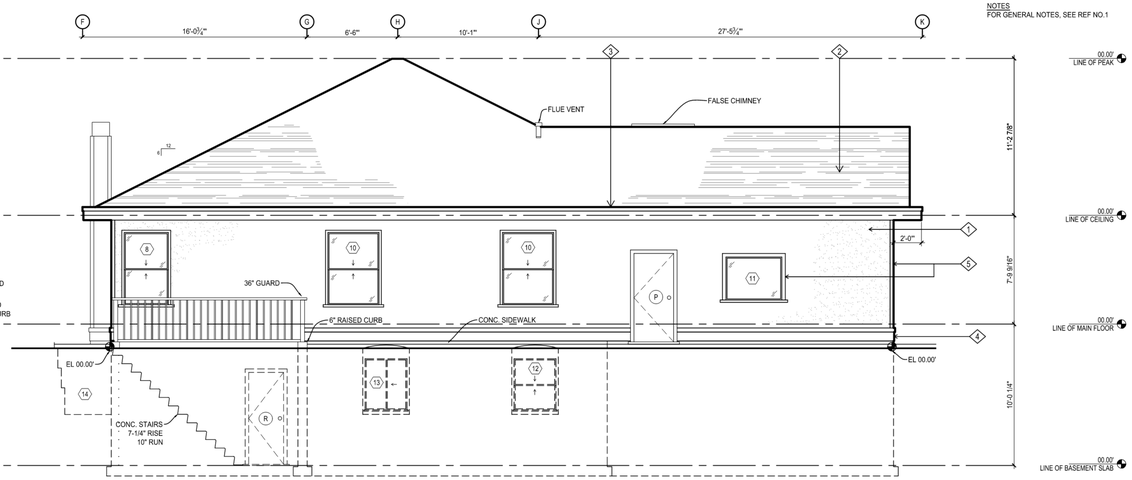

EAST ELEVATION

EXTERIOR FINISHES SCHEDULE

TAG	DESCRIPTION
1	ACRYLIC STUCCO EXTERIOR FINISH
2	FIBERGLASS ASPHALT SHINGLES
3	2X10 FASCIA BOARD WITH 1X4 TRIM
4	SKIRTBOARD WITH TRIM
5	1X4 TRIM FOR OUTSIDE EXTERIOR CORNERS, WINDOW AND DOORS
6	2X10 FASCIA BOARD WITH 1X4 TRIM FOR ROOF

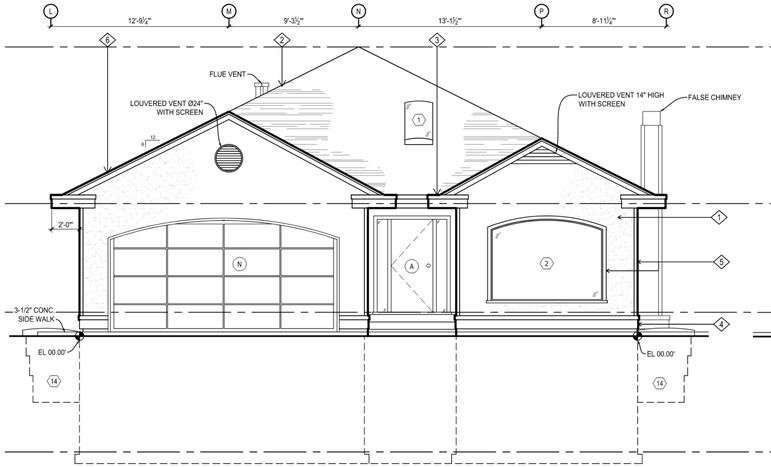

SOUTH ELEVATION (FRONT)

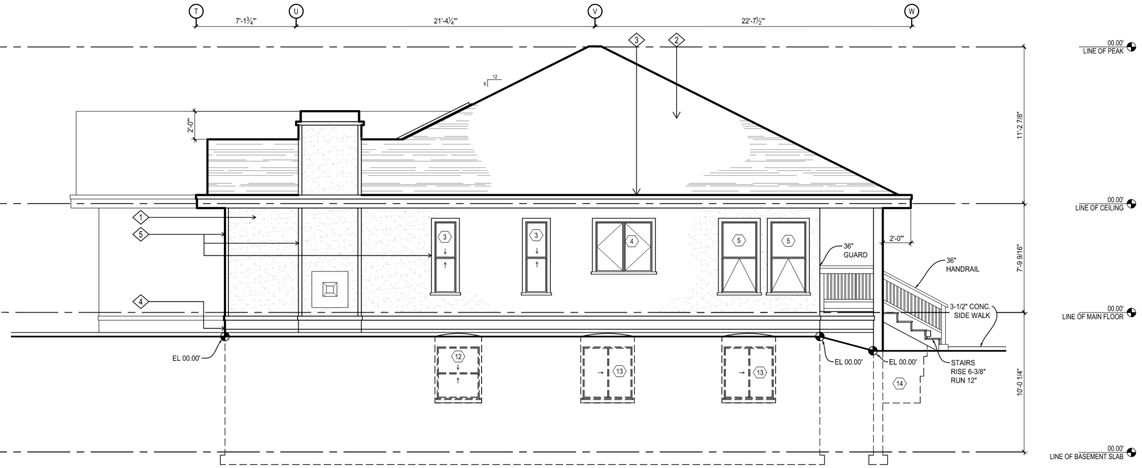

WEST ELEVATION

SINGLE FAMILY RESIDENCE

ELEVATIONS

NO.	DRAWING	REFERENCE	NO.	DATE	REVISION	APP.

COURSE
1274 SINGLE FAMILY RESIDENCES

VANCOUVER COMMUNITY COLLEGE
DRAFTING DEPT.

PROJECT
PROPOSED RESIDENCE OF CHRIS
ELEVATIONS

		DRAWING NO.	REV.
DRAWN	CS	A-1274-103	P1
SCALE	1/4"=1'-0"		
INST.	FF		
DATE	DEC 21 2022		

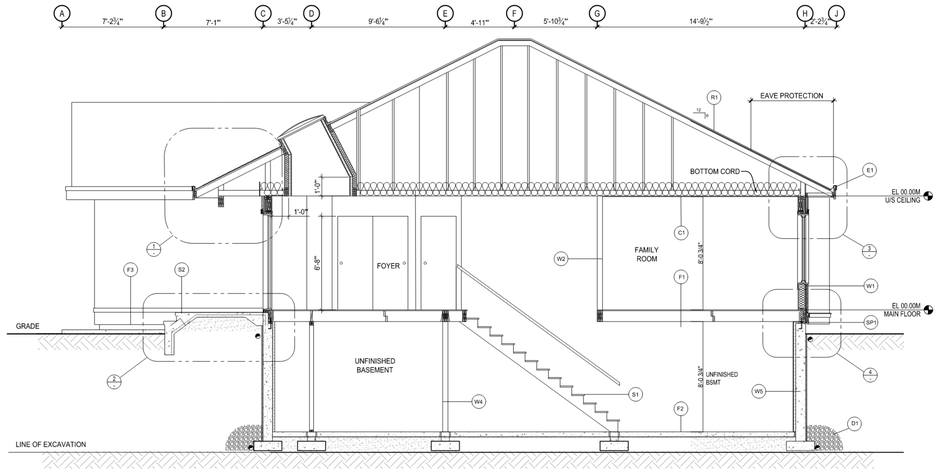

SECTION A 003
SCALE: 1/4" = 1'-0"

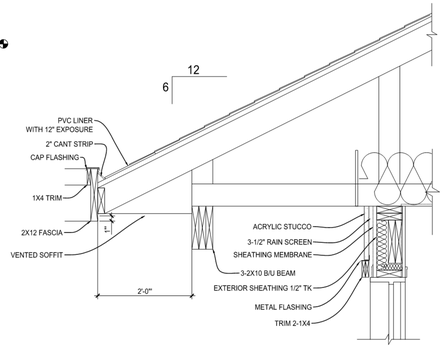

SECTION 1
SCALE: 1" = 1'-0"

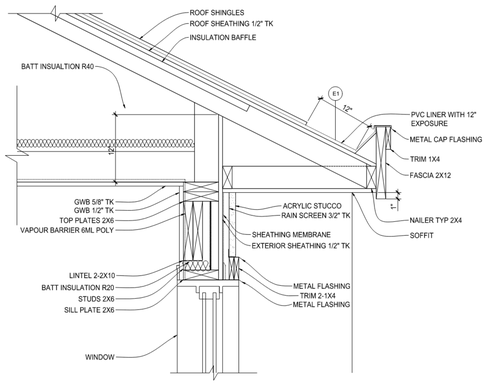

SECTION 3
SCALE: 1" = 1'-0"

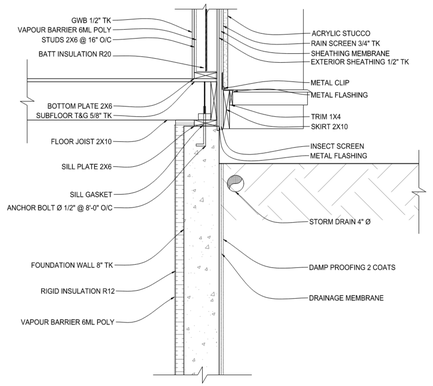

SECTION 4
SCALE: 1" = 1'-0"

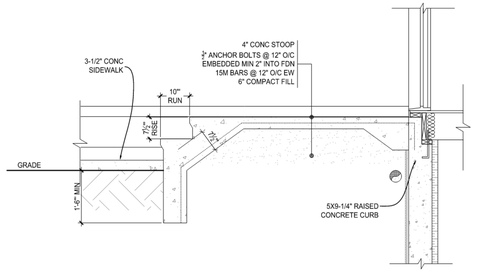

SECTION 2
SCALE: 1" = 1'-0"

ASSEMBLIES

C1 CEILING
R40 BATT INSULATION
6 ML POLY
5/8" GWB

D1 DRAINAGE
4" Ø PERFORATED PVC PIPE DRAIN TILE
3/4" CRUSH OVER 12" COVER
4" Ø SOLID PIPE STORM DRAIN

E1 EAVE
HIDDEN GUTTER
2X12 FASCIA BOARD WITH 1X4 TRIM
ALUMINUM PERFORATED SOFFIT
RUBBERIZED MEMBRANE EAVE PROTECTION

F1 MAIN FLOOR
HARDWOOD/ TILE/ CARPET/ VINYL FINISH
5/8" T&G PLYWOOD SUB-FLOOR
2X10 @ 18" C/O OR 16" C/O FLOOR JOIST
2X2 BRIDGING @ 6"-10" SPACING

F2 BASEMENT SLAB
3-1/2" THICK CONCRETE SLAB
6 ML POLY VAPOUR BARRIER
R12 RIGID INSULATION 4'-0" FROM PERIMETER

F3 GARAGE FLOOR
4-1/2" THICK CONCRETE SLAB
6 ML POLY VAPOUR BARRIER
6X6 10/10 WWF REINFORCING
6" THICK GRANULAR FILL

R1 ROOF
ASPHALT SHINGLES
ROOFING FELT NO. 15
1/2" THICK MEMBRANE H-CLIPS
ENGINEERED TRUSS OR RAFTER
@ 24" O/C, 12" HEEL
ROOF PITCH 6:12

S1 INTERIOR STAIRS
RISE 7-1/4" (TOTAL RISE 8'-7 1/2")
RUN 10" (TOTAL RUN 12'-1 1/4")
NOSING 1"
STRINGER 2X12
EFFECTIVE DEPTH 5 3/16"
HANDRAIL HEIGHT 36"
HEAD ROOM HEIGHT 80"

S2 STOOP
RAISED CURB 9-1/2" HIGH X 3-1/2" WIDE
RISE 7-7/16"
RUN 10"

SP1 SILL PLATE
2X6 STUD @16" C/O, TREATED (EXT)
2X4 STUD, TREATED (INT)
6"/4" FOAM GASKET
1/2" Ø ANCHOR BOLT @ 8'-0" O/C

W1 EXTERIOR WALL
ACRYLIC STUCCO EXTERIOR FINISH
3/4" TREATED RAIN SCREEN
TYVEK OR TYPHP HOUSE WRAP
1/2" THICK OSB SHEATHING
R20 BATT INSULATION
2X6 STUDS @ 18" O/C
6 ML POLY
1/2" THICK GWB

W2 INTERIOR PARTITIONS
2X4 STUDS @ 18" C/O OR 2X6 STUDS FOR
PLUMBING WALL
1/2" GWB

W4 INTERIOR FOUNDATION WALLS
2X6 STUDS @ 16" C/O OR 2X4 @ 16" O/C
6" WIDE CONCRETE CURB
18"X8" STRIP FOOTING

W5 EXTERIOR FOUNDATION WALLS
8" FOUNDATION WALL
2 COATS OF DAMP PROOFING
R12 RIGID INSULATION 2" BELOW GRADE
18"X8" STRIP FOOTING

NO.	DRAWING	REFERENCE	NO.	DATE	REVISION	APP.

COURSE: 1274 SINGLE FAMILY RESIDENCES

VANCOUVER COMMUNITY COLLEGE — DRAFTING DEPT.

PROJECT: PROPOSED RESIDENCE OF CHRIS
SECTION & DETAILS

DRAWN	CS	DRAWING NO.	REV.
SCALE	1/8"=1'-0"	A-1274-104	P1
INST.	FF		
DATE	JAN 2 2023		

SINGLE FAMILY RESIDENCE

SECTION & DETAILS

MULTI FAMILY RESIDENCE

SITE PLAN

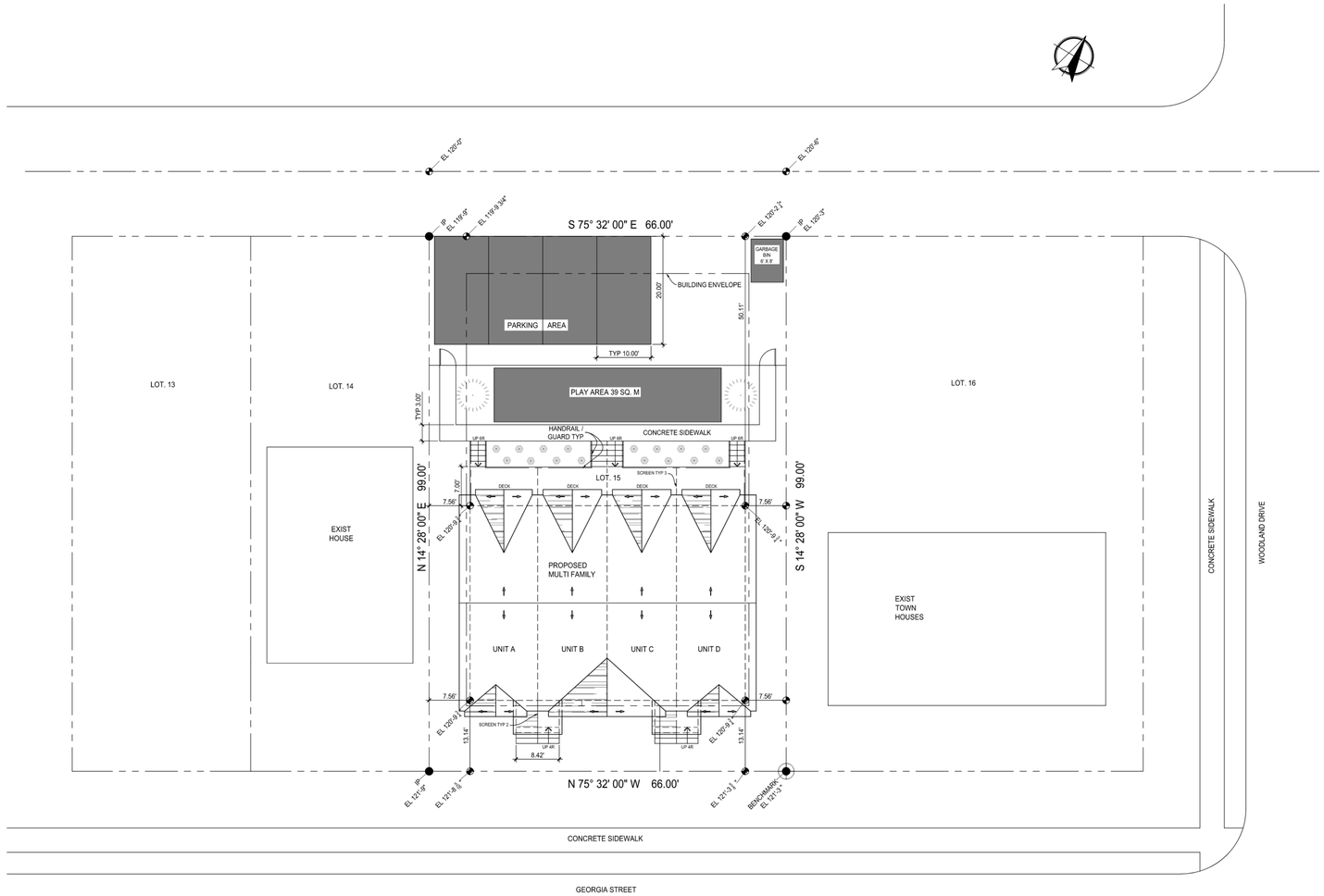

PLOT PLAN
SCALE : 1/8" = 1'-0"

GENERAL NOTES

1. ALL CONSTRUCTION SHALL COMPLY WITH PART 9 OF THE BUILDING CODE OF THE PROVINCE OF B.C. RESIDENTIAL STANDARDS, EXCEPT WHERE LOCAL BYLAWS TAKE PRECEDENCE.
2. THE CONTRACTOR SHALL ENSURE THAT THE CONSTRUCTION COMPLIES WITH ALL NATIONAL, PROVINCIAL, AND LOCAL REGULATIONS.
3. THE CONTRACTOR SHALL VERIFY ALL DIMENSIONS AND MATERIALS SHOWN ON DRAWINGS BEFORE PROCEEDING.
4. THE CONTRACTOR SHALL CHECK ALL EXISTING GRADES AND LOCATIONS OF CITY SERVICES PRIOR TO CONSTRUCTION.
5. FIRE PROTECTION SHALL CONFIRM TO SECTION 9.10 OF THE BCBC 1998 EDITION.
6. STAIRS AND HANDRAILS SHALL COMPLY WITH SECTION ?.? OF THE VBBL 1997.
7. STRUCTURAL CONCRETE TO DEVELOP 20 MPa COMPRESSIVE STRENGTH WITHIN 28 DAYS EXCEPT CONCRETE USED FOR GARAGE AND EXTERIOR STAIRS SHALL HAVE A MINIMUM COMPRESSIVE STRENGTH OR 30Mpa AT 28 DAYS.
8. ALL EXTERIOR CONCRETE SLABS SHALL HAVE AIR-ENTRAINMENT.
9. WOOD IN CONTACT WITH CONCRETE SHALL BE DAMP-PROOFED WITH 45-LB. TAR-SATURATED FELT OR POLYETHYLENE SILL GASKET.
10. BEAMS SHALL HAVE EVEN AND LEVEL BEARING AND SHALL HAVE NOT LESS THAN 3½" LENGTH OF BEARING AT END SUPPORTS.
11. INDIVIDUAL MEMBERS OF A BUILT UP BEAM SHALL BE NAILED TOGETHER WITH A DOUBLE ROW OF NAILS NOT LESS THAN 3½" IN LENGTH, SPACED NOT MORE THAN 18" APART IN EACH ROW WITH THE END NAILS LOCATED 4" TO 6" FROM THE END OF EACH PIECE.
12. EXTERIOR DIMENSIONS ARE TO OUTSIDE OF WALL SHEATHING.
13. DIMENSIONS TAKE PRECEDENCE OVER SCALE.
14. FLOOR JOISTS SHALL HAVE BRIDGING ROWS @ 7'-0" MAX. O.C.
15. ALL LOAD BEARING INTERIOR AND EXTERIOR LINTELS SHALL BE 2-2X10 U.N.O.
16. THE WIDTH OR DIAMETER OF A WOOD COLUMN SHALL BE NOT LESS THAN THE WIDTH OF THE SUPPORTED MEMBER.
17. FLOOR AREAS FINISHED WITH SHEET VINYL OR CERAMIC TILES TO HAVE MIN. ¼" PARTICLE BOARD APPLIED OVER SUBFLOOR.
18. FRAMING MEMBERS ARE SPF NUMBER 2 AND BETTER.
19. SUB FLOORS AT ⅝" TONGUE AND GROOVE PLYWOOD NAILED AND GLUED TO SUPPORTING JOISTS. EXTERIOR GRADE PLYWOOD FOR REAR DECK.
20. FINISHED FLOORS COVERED WITH ¼" LAMINATE FLOORING, ON THE LOWER FLOORS. STAIRS AND UPPER FLOORS COVERED WITH WALL-TO-WALL CARPETING.
21. EXTERIOR WALLS CONSISTS OF THE FOLLOWING:
    - ONE LAYER OF ASPHALT IMPREGNATED BUILDING FELT
    - PLYWOOD SHEATHING
    - 2X6 STUDS AT 16" ON CENTER (92⅝" STUD LENGTH)
    - GLASS FIBER BATT INSULATION BETWEEN STUDS
    - VAPOUR BARRIER
    - ½" GYPSUM WALL BOARD
23. EXTERIOR FINISH:
    - NORTH & SOUTH LOWER WALLS-BRICK VENNER-CENTENNIAL GREY
    - ALL OTHER WALLS COURSE STUCCO-CHARCOAL GREY
    - PAINTED WOOD TRIM PER DETAILS-WHITE
24. INTERIOR WALLS CONSISTS OF THE FOLLOWING:
    - ½" GYPSUM WALL BOARD EACH SIDE
    - 2X4 (FINGER JOINT) STUDS AT 16" (92⅝" STUD LENGTH)
25. COMMOM WALLS ARE TYPE W15a OF THE VBBL.
26. ROOFS CONSISTS OF THE FOLLOWING:
    - CAMBRIDGE 30 LAMINATED FIBERGLASS SHINGLES BY IKO-COLOUR DUAL BLACK
    - ONE LAYER OF ASPHALT IMPREGNATED BUILDING FELT
    - PLYWOOD SHEATHING (EDGES SUPPORTED OR CLIPPED)
    - EAVE PROTECTION AND VENTING PER VBB
    - 1'-6" TYPICAL EAVE PROJECTION
    - 2X4 TRIM ON 2X10 FASCIA-PAINTED WHITE
    - ALUMINUM VENTED SOFFIT-WHITE
    - CONTINUOUS 4" ALUMINUM EAVE TROUGHS-BLACK
    - ALUMINUM DOWNSPOUTS-BLACK-TO SEWER CONNECTION
27. INTERIOR DETAILS CONSISTS OF THE FOLLOWING:
    - ELECTRIC BASEBOARD HEAT
    - 34 GALLON GAS HOT WATER TANK
    - 33" WIDE ELECTRIC FIREPLACE (DT400SEN BY SUPERIOR)
28. REAR SUNDECK CONSISTS OF THE FOLLOWING:
    - VINYL SHEET DECK COATING (GREY)
    - EXTERIOR TONGUE AND GROOVE PLYWOOD
    - JOISTS, BUILT-UP BEAMS AND POSTS TO SUIT
    - SLOPE AWAY FROM STUCTURE AT ¼" PER FOOT MINIMUM
    - TREATED WOOD STAIRS (PAINTED)
    - TREATED WOOD HANDRAIL (PAINTED)
    - PRIVACY SCREENS TO SUIT
29. EXTERIOR CONCRETE:
    - ALL EXTERIOR CONCRETE TO BE AIR-ENTRAINED
    - FRONT STAIRS AND ALL SIDEWALKS (FRONT, SIDES AND REAR) ARE EXPOSED (¼" MINUS) AGGREGATE.
    - PARKING PADS AND GARBAGE BIN PAD SHALL BE BROOM FINISH CONCRETE. EXPOSED AGGREGATE CONCRETE SPRAYED WITH CLEAR (WET LOOK) PROTECTANT.
    - ALL HANDRAILS ARE BLACK WROUGHT IRON

STREET ADDRESS
1644 GEORGIA STREET
VANCOUVER B.C.

LEGAL DESCRIPTION
LOT 15 OF BLOCK 128 PLAN 1746
PART OF DL 237 NEW WESTMINSTER DISTRICT
VANCOUVER BC

SITE COVERAGE STATEMENT
PERMITTED 50%
PROPOSED 28.05%

ZONING
RM-5 (MULTIFAMILY)

F:\VCC\LEVEL 2\1275\PROJECT FILES\CHRIS-A-1275-MULTI FAM.DWG

NO.	DRAWING	REFERENCE	NO.	DATE	REVISION	APP.

COURSE: 1275 MULTI-FAMILY RESIDENCES

VANCOUVER COMMUNITY COLLEGE — CAD & BIM TECHNOLOGIES

PROJECT: 4 UNITS TOWNHOUSE
SITE PLAN, GENERAL NOTES

		DRAWING NO.	REV.
DRAWN	CS	A-1275-101	0
SCALE	1/8"=1'0"		
INST.	FF		
DATE	JAN 19 2023		

MULTI FAMILY RESIDENCE

FLOOR PLAN

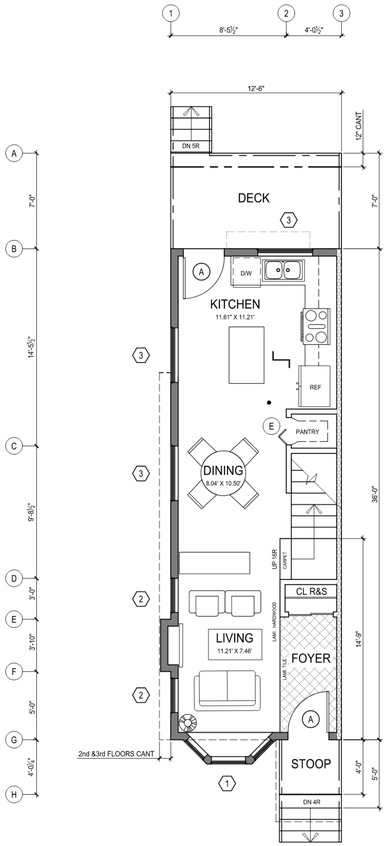

FIRST FLOOR
SCALE: 1/4" = 1'0"

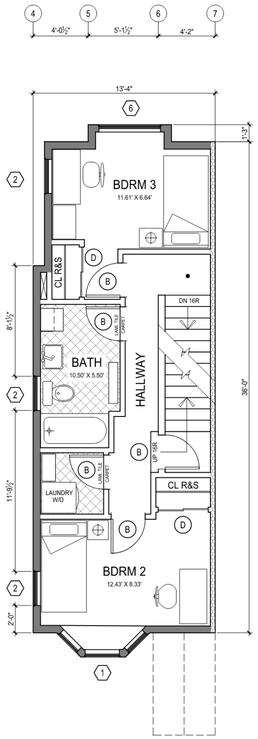

SECOND FLOOR
SCALE: 1/4" = 1'0"

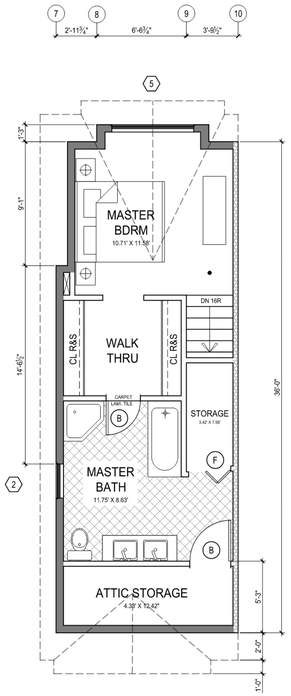

THIRD FLOOR
SCALE: 1/4" = 1'0"

WINDOW SCHEDULE

TAG	RO SIZE	TYPE	QTY
1	6'-8 7/16" x 5'-1"	DOUBLE HUNG BAY UNIT; KOLBE 45-VDY1650/40/16	2
2	2'-6" x 4'-0"	DOUBLE HUNG, PROJECTED SILL, KOLBE VDH2640	5
3	4'-0" x 4'-0"	DOUBLE HUNG, PROJECTED SILL, KOLBE VDH4040	3
4	4'-6" x 4'-0"	DOUBLE HUNG, PROJECTED SILL, KOLBE VDHS4046	1
5	6'-0" x 4'-0"	DOUBLE HUNG, PROJECTED SILL, KOLBE VDHS6040	1

DOOR SCHEDULE

TAG	RO SIZE	TYPE	QTY
A	3'-0" x 6'-8"	24 GAUGE GALVANIZED U14, BY MASTER SEAL	2
B	2'-6" x 6'-8"	HOLLOW CORE, RAISED, SWING, WHITE U14	8
D	4'-0" x 6'-8"	SLIDING, HOLLOW CORE WITH MIRROR FOR CLOSETS	3
E	2'-6" x 6'-8"	BI-FOLD HOLLOW CORE FOR PANTRY	1
F	2'-6" x 6'-8"	BI-FOLD HOLLOW CORE FOR STORAGE	1

WALL SCHEDULE

	EXTERIOR WALL
	COMMON WALL (W13a TABLE 1-9. 10.3. 1a)
	PARTITION WALL
	2x4 BEARING WALL

SYMBOLS LEGEND

SYM	DESCRIPTION
■	POINT LOAD
	2" RIGID INSUL. UNFINISHED AREA
	BEARING WALL
●	SMOKE DETECTOR

NOTES

FOR GENERAL NOTES, SEE REF No.1

FSR

FLOOR AREA PROPOSED:

FIRST STOREY	171.6 SQ.M.
SECOND STOREY	181.6 SQ.M.
THIRD STOREY	171.2 SQ.M.
TOTAL PROPOSED	524.4 SQ.M.
FLOOR AREA PERMITTED	607.0 SQ.M. FSR 100%
FLOOR AREA PROPOSED	524.4 SQ.M. FSR 86.4%
DECK AREA PERMITTED	12%
DECK AREA PROPOSED	5.2%

NO.	DRAWING	REFERENCE	NO.	DATE	REVISION	APP.
1	A-1275-100	MULTI-FAM SITE PLAN				

COURSE: 1277 MULTI FAMILY RESIDENCES

VANCOUVER COMMUNITY COLLEGE — CAD & BIM TECHNOLOGIES

PROJECT: 4 UNIT TOWNHOUSE
UNIT A – FLOOR PLAN

DRAWN	CS
SCALE	1/4"=1'0"
INST.	FF
DATE	02-10-2023

DRAWING NO.: A–1277–102

REV.: xx

MULTI FAMILY RESIDENCE

ELEVATIONS

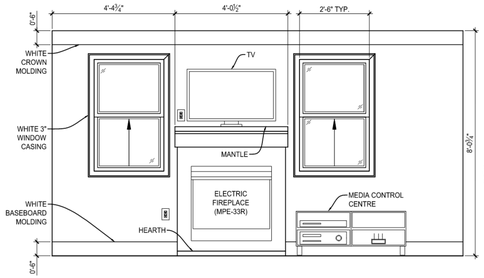

SECTION 5/104
SCALE: 1/2"=1'0"

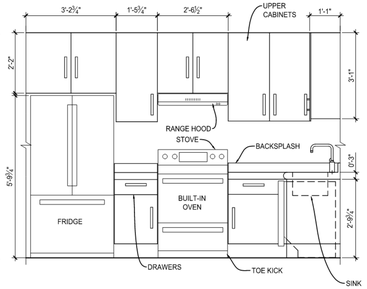

SECTION 6/104
SCALE: 1/2"=1'0"

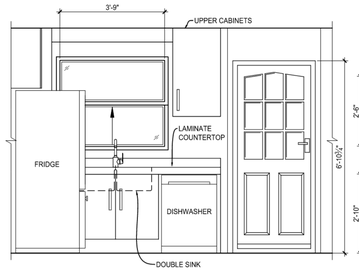

SECTION 7/104
SCALE: 1/2"=1'0"

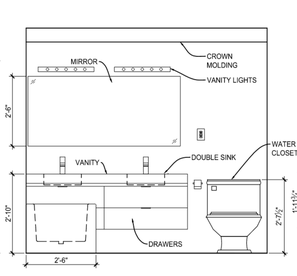

SECTION 8/104
SCALE: 1/2"=1'0"

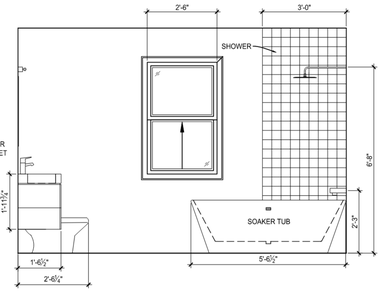

SECTION 9/104
SCALE: 1/2"=1'0"

EXTERIOR FINISHES SCHEDULE

TAG	DESCRIPTION	TAG	DESCRIPTION	TAG	DESCRIPTION
1	BRICK VENEER - CENTENNIAL GREY	1	EXTERIOR DECORATIVE PANEL W/ 1 x 6 TRIM	1	TREATED WOOD HANDRAIL AND GUARD
2	ACRYLIC COARSE STUCCO - CHARCOAL GREY	2	COPPER HOOD	2	BLACK WROUGHT IRON HANDRAIL AND GUARD
3	VINYL SIDING - CHARCOAL GREY	3	CAMBRIDGE 30 LAMINATED FIBERGLASS SHINGLES BY IKO - DUAL BLACK	3	TREATED WOOD PRIVACY SCREEN 6'-8"
4	2 x 10 FASCIA BOARD W/ 2 x 4 TRIM - PAINTED WHITE	4	4" CONTI. ALUMINUM EAVE TROUGHS W/ FEDERAL CONDUCTOR HEADS - BLACK	4	FOR EXTERIOR DOORS, 2x4 WOOD TRIMS - PAINTED WHITE
5	2 x 12 FASCIA BOARD W/ 2 x 4 TRIM - PAINTED WHITE - FOR DORMER ROOF	5	EXPOSED AGGREGATE CONCRETE W/ WET LOOK PROTECTANT	5	FOR ALL WINDOWS, WOOD TRIMS - PAINTED WHITE, SIZED AS BELOW
6	2 x 10 SKIRT BOARD WITH 1 x 4 TRIM - PAINTED WHITE	6	LOUVERED GABLE VENT W/ SCREEN (OVAL Ø8"x6", TRIANGLE HEIGHT 24")		1x4 ON 2x6 ON TOP, 2x4 ON SIDES, 2x2 SILL EXTENSION AND 2x6 LOWER

NORTH ELEVATION (FRONT)
SCALE: 1/4" = 1'0"

EAST ELEVATION
SCALE: 1/4" = 1'0"

NO.	DRAWING	REFERENCE	NO.	DATE	REVISION	APP.
4	A-1277-104	ELEVATIONS				
3	A-1277-103	SECTION & DETAILS				
2	A-1277-102	FLOOR PLAN				
1	A-1277-101	SITE PLAN				

COURSE: 1277 MULTI FAMILY RESIDENCES

VANCOUVER COMMUNITY COLLEGE — CAD & BIM TECHNOLOGIES

PROJECT: 4 UNIT TOWNHOUSE
UNIT A – FLOOR PLAN

DRAWN	CS
SCALE	1/4"=1'0"
INST.	FF
DATE	02-10-2023

DRAWING NO. A–1277–104 REV. xx

MULTI FAMILY RESIDENCE

SECTION & DETAILS

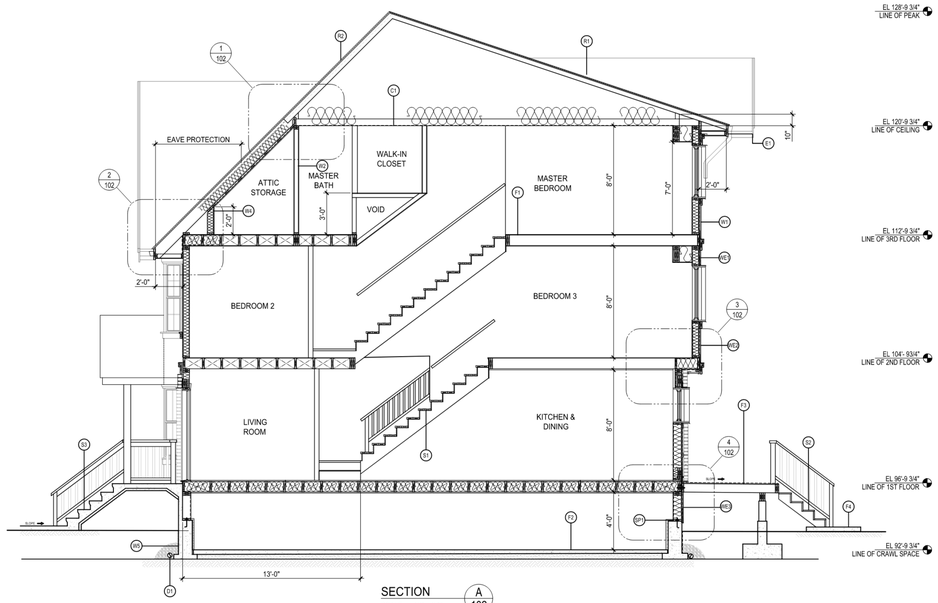

SECTION A/102
SCALE: 1/4" = 1'-0"

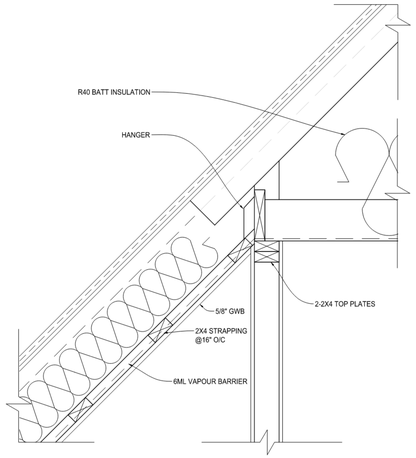

DETAIL 1/102
SCALE:1" = 1'-0"

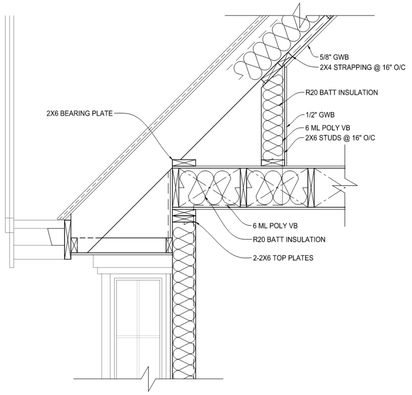

DETAIL 2/102
SCALE:1" = 1'-0"

ASSEMBLIES

C1 CEILING
R40 BATT INSULATION
6 ML POLY
5/8" GWB

D1 DRAINAGE
4" Ø PERFORATED PVC PIPE DRAIN TILE
3/4" CRUSH OVER 12" COVER
4" Ø SOLID PIPE STORM DRAIN

E1 EAVE
HIDDEN GUTTER
2X12 FASCIA BOARD WITH 1X4 TRIM
VENTED SOFFIT
RUBBERIZED MEMBRANE EAVE
PROTECTION, ICE SHIELD

F1 1SR, 2ND, 3RD FLOOR
1/4" LAMINATE (HARDWOOD), STAIRS AND
UPPER FLOORS COVERED WITH CARPETING
5/8" T&G PLYWOOD SUB-FLOOR NAILED AND
GLUED TO SUPPORTING JOISTS
2X10 @ 16" C/O OR 16" C/O FLOOR JOIST
2X8 BRIDGING @ 6'-10" SPACING

F2 CRAWL SPACE
3" SKIM COAT
6 ML POLY VAPOUR BARRIER
R12 RIGID INSULATION
3/4" TK GRANULAR FILL

F3 DECK FLOOR
VINYL SHEET DECK COATING (GRAY
5/8" T&G PLYWOOD SUB-FLOOR, EXTERIOR
GRADE
2X8 @ 16" O/C TREATED FLOOR JOISTS
WITH JOIST HANGERS, 1/8" SLOPE PER FOOT
2X8 TREATED LEDGER WITH 1/4" Ø LAG BOLT
@ 16" O/C

F4 EXTERIOR CONCRETE
FRONT STAIRS AND ALL SIDEWALKS
4" CONCRETE
EXPOSED AGGREGATE CONC. (1/4" MINUS)
SPRAYED WITH CLEAR (WET LOOK)
PROTECTANT
FRONT STOOP 1/8" SLOPE AWAY FROM
BUILDING
PARKING PAD AND GARBAGE BIN PAD
4" CONCRETE
BROOM FINISH CONCRETE

R1 MANUFACTURED ROOF
ENGINEERED TRUSS @ 16" O/C
WITH MIN 2" AIR SPACE AND 10" HEEL PER VBBL
CAMBRIDGE 30 LAMINATED FIBERGLASS
SHINGLES BY IKO (DUAL BLACK)
1 LAYER OF ASPHALT IMPREGNATED
BUILDING FELT
5/8" PLYWOOD SHEATHING
4" CONT. ALUMINUM EAVE TROUGHS - BLACK
ROOF PITCH 12:12

R2 SITE BUILT ROOF
?? ROOF JOISTS WITH MIN 2" AIR SPACE
R20 BATT INSUALTION
ROOF PITCH 12:4

S1 INTERIOR STAIRS
7-1/2" RISE (TOTAL RISE 8'-10")
10" RUN (TOTAL RUN 12'-3")
1" NOSING
STRINGERS 2-2X10
EFFECTIVE DEPTH 3-1/2"
HEADROOM HEIGHT 6'-8"
HANDRAIL HEIGHT 36"
GUARD HEIGHT 36"
BALUSTER SPACING MAX 4"

S2 DECK
VINYL SHEET DECK COATING (GREY)
TREATED WOOD STAIRS (PAINTED)
TREATED WOOD HAND RAIL (PAINTED)
RISE 7-1/2" (TOTAL RISE 3'-0")
RUN 10" (TOTAL RUN 3'-4")
NOSING 1"
STRINGERS 2-2X10
EFFECTIVE DEPTH 3-1/2"
HANDRAIL HEIGHT 36"
GUARD HEIGHT 36"
BALUSTER SPACING MAX 4"

S3 STOOP STAIRS
EXPOSED AGGREGATE CONC. (1/4" MINUS)
SPRAYED WITH CLEAR (WET LOOK)
PROTECTANT
RISE 7-1/2"
RUN 10"
NOSING 1"
BLACK WROUGHT IRON HAND RAIL
HAND RAIL HEIGHT 36"
GUARD HEIGHT 36"
BALUSTER SPACING MAX 4"
TREATED WOOD PRIVACY SCREEN
RAISED CURB 4" HIGH, 48" WIDE

SP1 SILL PLATE
2X6 TREATED SILL PLATE
SILL GASKET
Ø 1/2" ANCHOR BOLT @ 16" O/C

WE1 FRONT & BACK EXTERIOR FINISH
1ST LEVEL NORTH AND SOUTH WALLS
BRICK VENEER (CENTENNIAL GRAY) WITH
L6X4X1/4CONTINUOUS SUPPORT ANGLE
CONNECTED TO DOUBLE BLOCKING
WITH Ø 1/4" LAG BOLT
@ 16" O/C AND PAC-TIE TYP. AS PER CSA A370

WE1 UNDER DECK EXTERIOR FINISH
1" SIDING

WE3 ALL OTHER EXTERIOR FINISH
1" SUTCCO (GRAY)
PAINTED 1X4 TRIM ON 2X10 SKIRT (WHITE)

W1 EXTERIOR WALL
1/2"X1-1/2" TK RAIN SCREEN, TREATED
ONE LAYER OF TYVEK BUILDING MEMBRANE
1/2" OSB EXTERIOR SHEATHING
R20 BATT INSULATION BETWEEN STUDS
2X6 STUDS @ 16" O/C
6MIL POLY VAPOUR BARRIER
1/2" GWB (EXCEPT CRAWL SPACE)

W2 INTERIOR PARTITIONS
2X4 (FINGER JOINT) STUDS @ 16" C/O
(92 1/4" STUD LENGTH)
1/2" TK GWB

W3 COMMON WALL
VBB TABLE A-9.10.3.1A W13A
5/8" TYPE X GWB
2X4 STUDS @ 16" O/C
1" AIR SPACE BETWEEN

W4 PONY WALL ON 3RD FLOOR
R20 BATT INSULATION
2X4 STUDS @ 16" O/C
6MIL POLY VAPOUR BARRIER
1/2" GWB

W5 EXTERIOR FOUNDATION WALLS
8" TK WITH 15M BAR @16" O/C
FOR SOUTH WALL 8" TK
2 COATS DAMP PROOFING
DRAINAGE MEMBRANE
R12 RIGID INSULATION
34X34X9 STRIP FOOTING
FOR SOUTH WALL, 34X34X9
STRIP FOOTING

W6 INTERIOR FOUNDATION WALLS
2-2X6 STUDS @ 18" C/O
2-2X6 SILL PLATES TREATED
SILL GASKETS
1/2" ANCHOR BOLTS
4" CONCRETE CURB
34X34X9 STRIP FOOTING

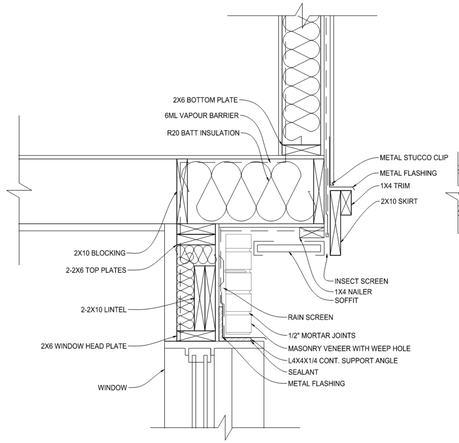

DETAIL 3/102
SCALE:1" = 1'-0"

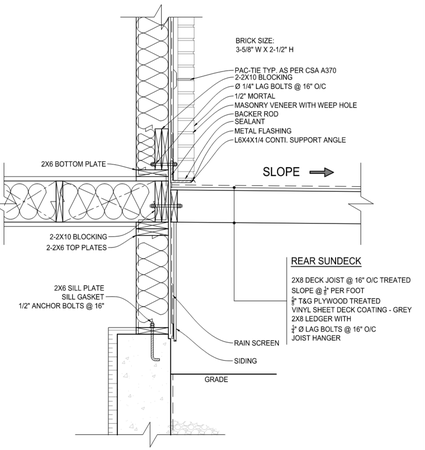

DETAIL 4/102
SCALE:1" = 1'-0"

NO.	DRAWING	REFERENCE	NO.	DATE	REVISION	APP.

COURSE
1276 MULTI FAMILY RESIDENCES

VANCOUVER COMMUNITY COLLEGE
CAD & BIM TECHNOLOGIES

PROJECT
4 UNIT TOWNHOUSE
SECTION & DETAILS

DRAWN	CS	DRAWING NO.	REV.
SCALE	AS REQ'D	A–1276–102	xx
INST.	FF		
DATE	01–27–2023		

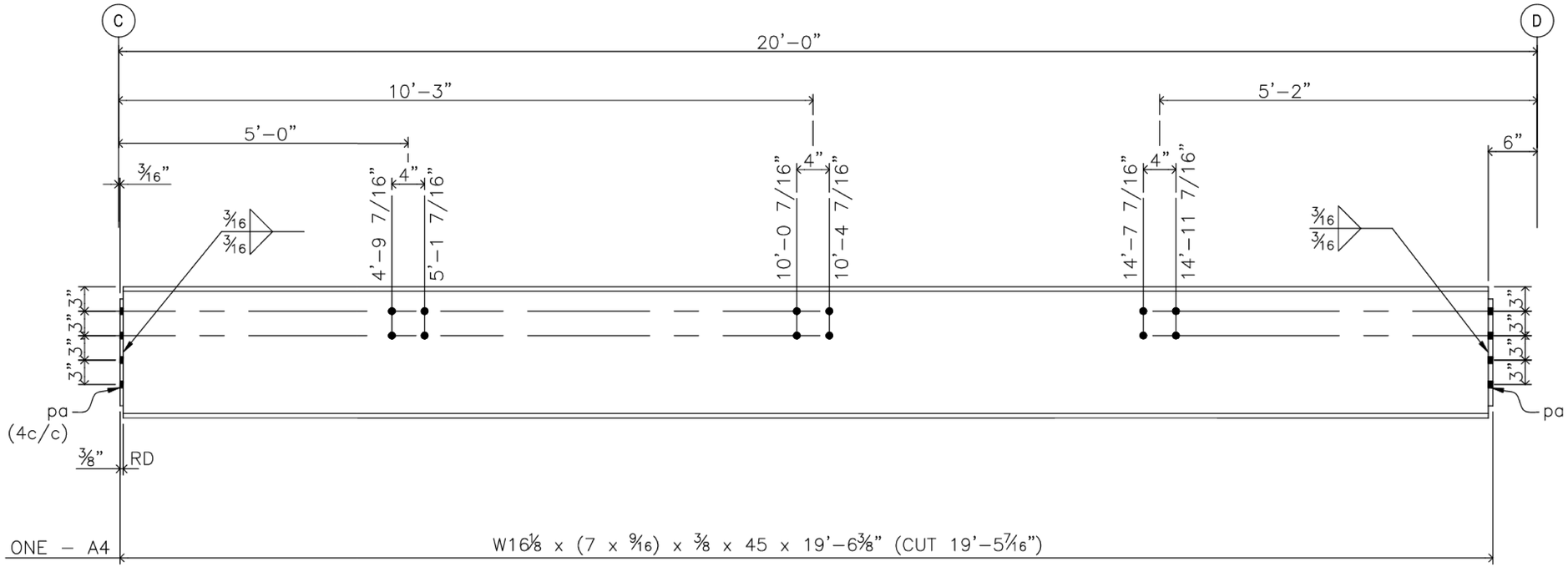

QTY.	MARK	DESCRIPTION	LENGTH	REMARKS	BILL #	WEIGHT
2	pa	PL 3/8 x 7	1'–0			
1	A4	W16 x 45	19'–5 7/16			
ONE	A4	BEAM	19'–6 3/8			

REV.	DATE	REMARKS	BY

CUST. REF. DWG:

VCC REF. DWG:

OPEN HOLES: 13/16Ø UNLESS NOTED

SHOP FINISH:

MATERIAL:

VANCOUVER COMMUNITY COLLEGE

VCC FABRICATORS

VANCOUVER

BRITISH COLUMBIA

CLIENT: RP

PROJECT: MY FIRST BEAM

DWG. TITLE: BEAM

DRAWN:	DATE:	CONT. NO.	
CS	11–07–2023		
CHECKED:	DATE:	DWG.NO.	REV.
DC	11–08–2023	4	A

BASIC BEAM

STEEL DETAILING

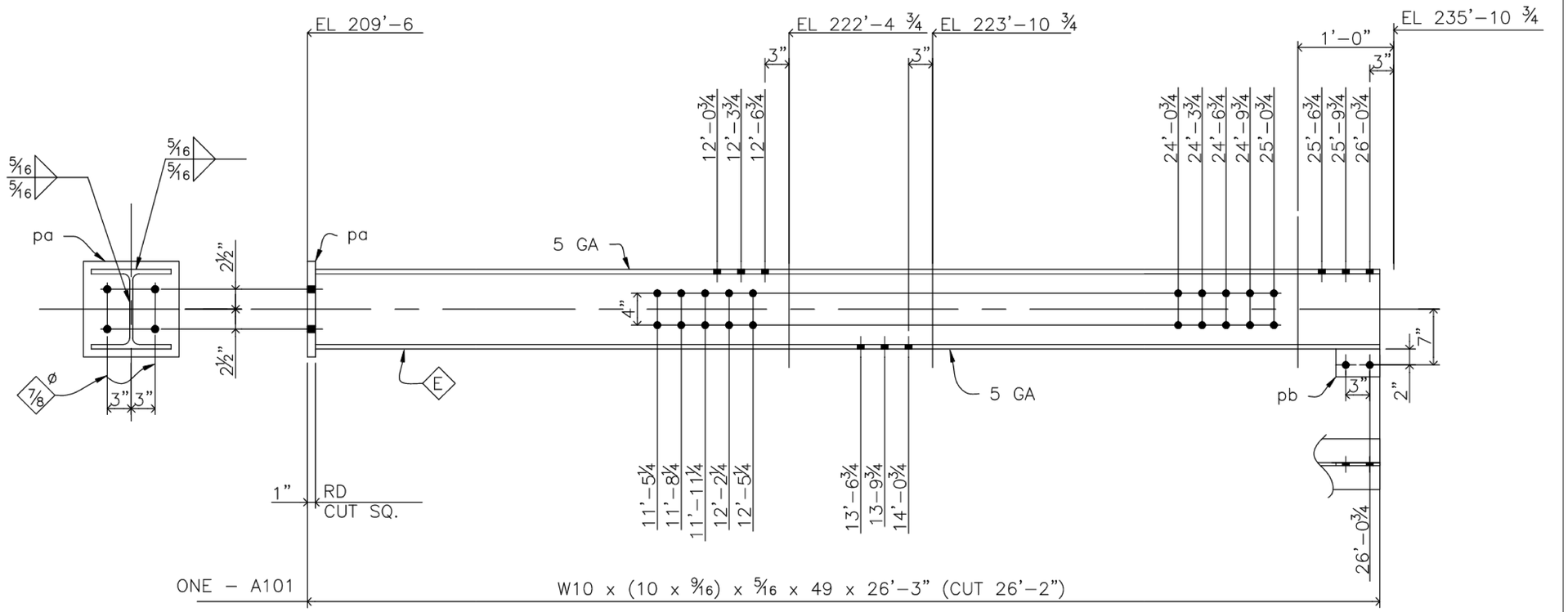

QTY.	MARK	DESCRIPTION	LENGTH	REMARKS	BILL #	WEIGHT
1	pb	PL ⅜ x 5½ x 3½	0'-5½			
1	pa	PL 1 x 12 x 1'	1'-0			
1		W10 x 49	26'-2			
1	A1	BEAM	26'-3			

REV.	DATE	REMARKS	BY

CUST. REF. DWG:
VCC REF. DWG:
OPEN HOLES: 13/16ø UNLESS NOTED
SHOP FINISH:
MATERIAL:

VANCOUVER COMMUNITY COLLEGE

VCC FABRICATORS
VANCOUVER
BRITISH COLUMBIA

CLIENT: VCC
PROJECT: INTRO TO STEEL DETAILING
DWG. TITLE: MY FIRST COLUMN

DRAWN:	DATE:	CONT. NO.	
CS	11-14-2023	DRFT 2291	
CHECKED:	DATE:	DWG.NO.	REV.
SB	11-15-2023	101	A

BASIC COLUMN

STEEL DETAILING