REVIT

ARCHITECTURAL & STEEL

by CHRIS SISON

GRANGE
AUDOBON CENTER

PHASE 1

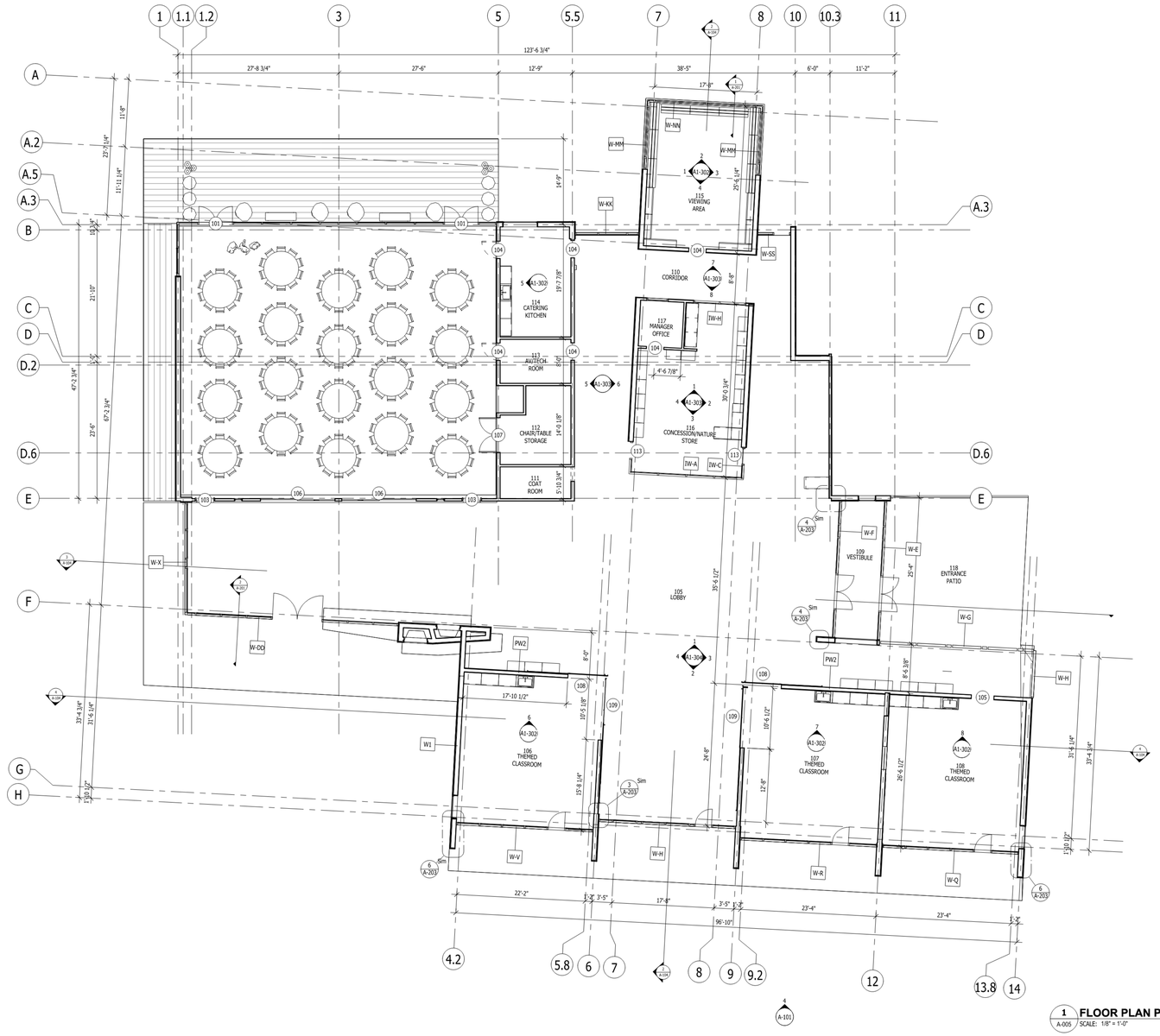

1 A-005 **FLOOR PLAN PHASE 01**
SCALE: 1/8" = 1'-0"

VANCOUVER COMMUNITY COLLEGE

DO NOT SCALE DRAWING

REV	DATE	DESCRIPTION	BY:

NORTH ARROW

TRUE NORTH

START DATE	2013/09/05
PROJECT No	2009
DR.	HESTIA TEAM
CH.	COLLABORATION
SCALE	1/8" = 1'-0"

CONTRACTOR MUST VERIFY ALL DIMENSIONS AND SITE CONDITIONS AS SHOWN ON THIS DRAWING AND NOTIFY DESIGNER IMMEDIATELY OF ANY DISCREPANCY OR OMISSION.

CONTRACTOR SHALL COMPLY WITH THE CONTRACT DOCUMENTS, PERFORMANCE REQUIREMENTS, APPLICABLE CODES AND REGULATIONS.

ALL MATERIALS TO MEET CODE.

THIS DRAWING AND THE INFORMATION SHOWN OR IMPLIED HEREIN CONSTITUTE THE ORIGINAL AND UNPUBLISHED WORK OF MICHAEL SNOW INC. AND MAY NOT BE DUPLICATED, USED OR DISCLOSED WITHOUT PRIOR WRITTEN CONSENT OF MICHAEL SNOW.

DO NOT SCALE DRAWING.

PROJECT NAME

GRANGE AUDUBON CENTER

GRANGE INSURANCE
505 W WHITTIER ST.,
COLUMBUS, OH 43215, USA

FLOOR PLAN PHASE 01

REV. NO	PROJECT NO.	SHEET NO.
	2009	A-005

11/20/2013 4:07:24 PM

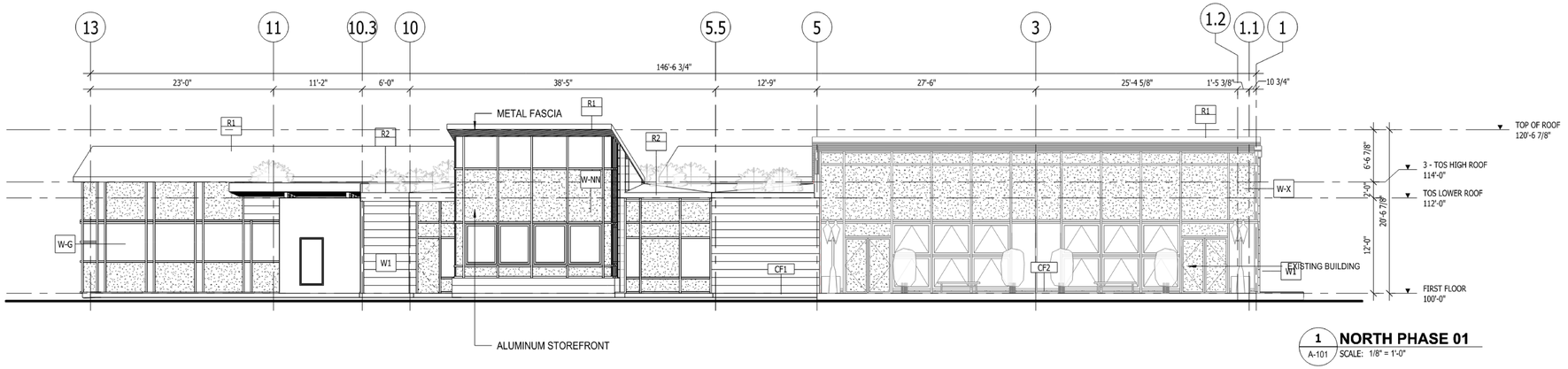

1 A-101 **NORTH PHASE 01**
SCALE: 1/8" = 1'-0"

GRANGE AUDOBON CENTER

ELEVATIONS

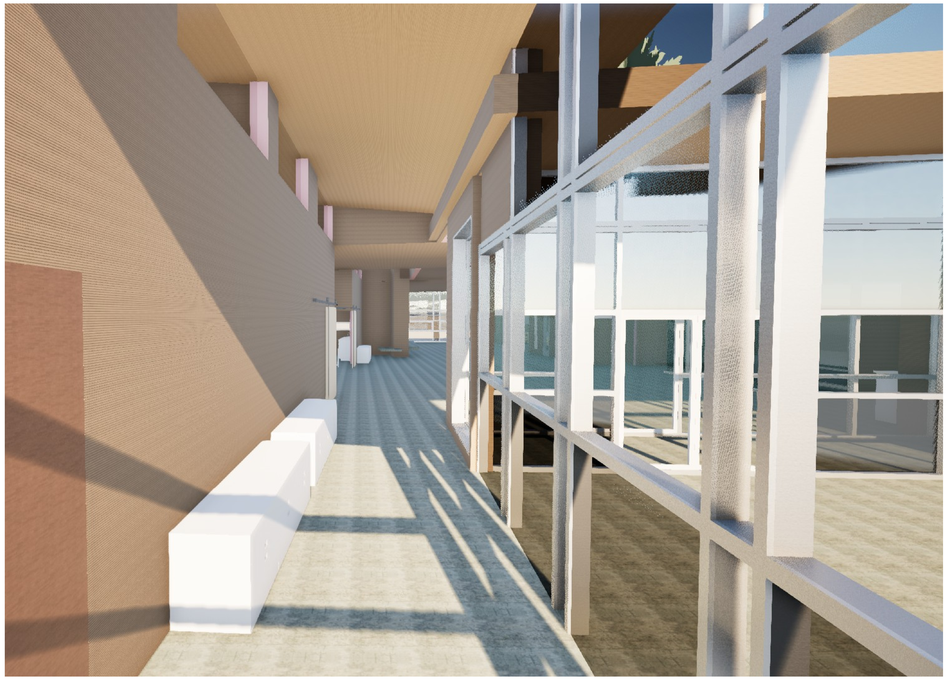

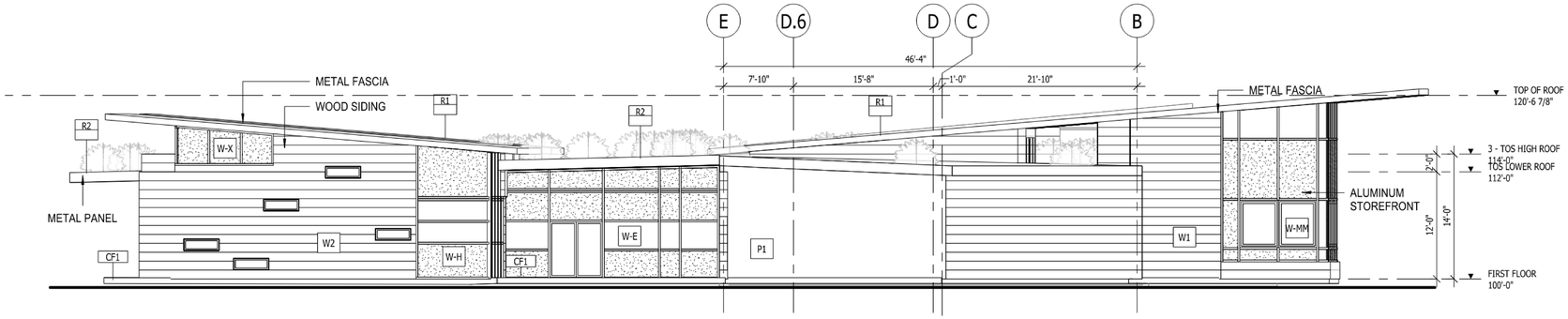

2 A-101 **EAST PHASE 01**
SCALE: 1/8" = 1'-0"

GRANGE AUDOBON CENTER

ELEVATIONS

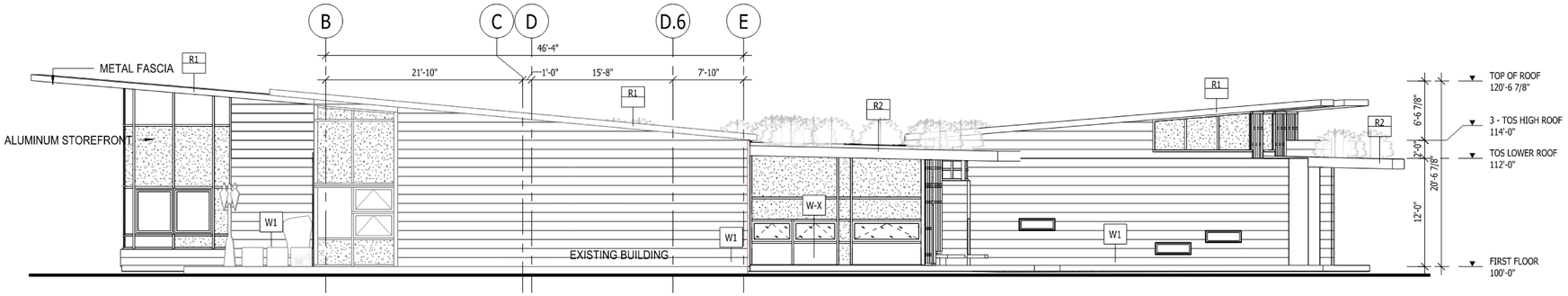

3 A-101 **WEST PHASE 01**
SCALE: 1/8" = 1'-0"

GRANGE AUDOBON CENTER

ELEVATIONS

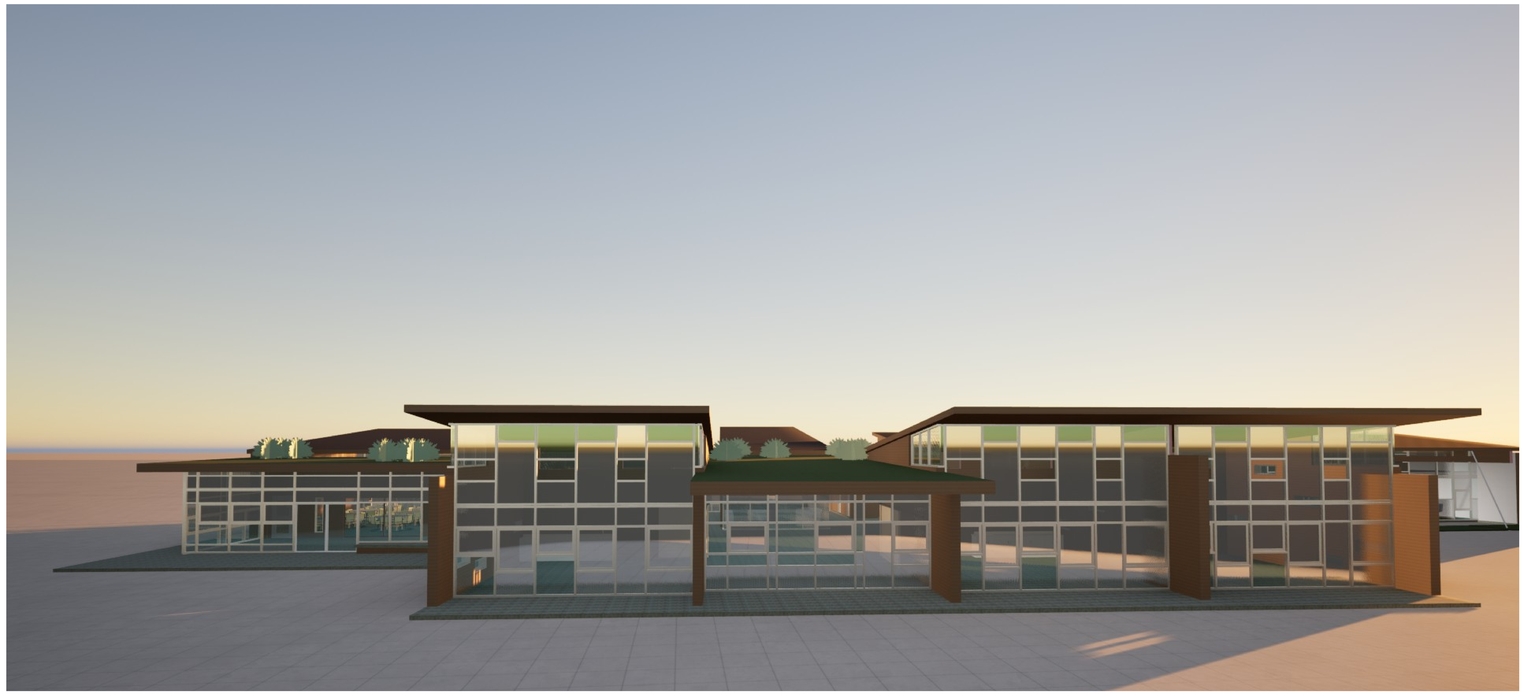

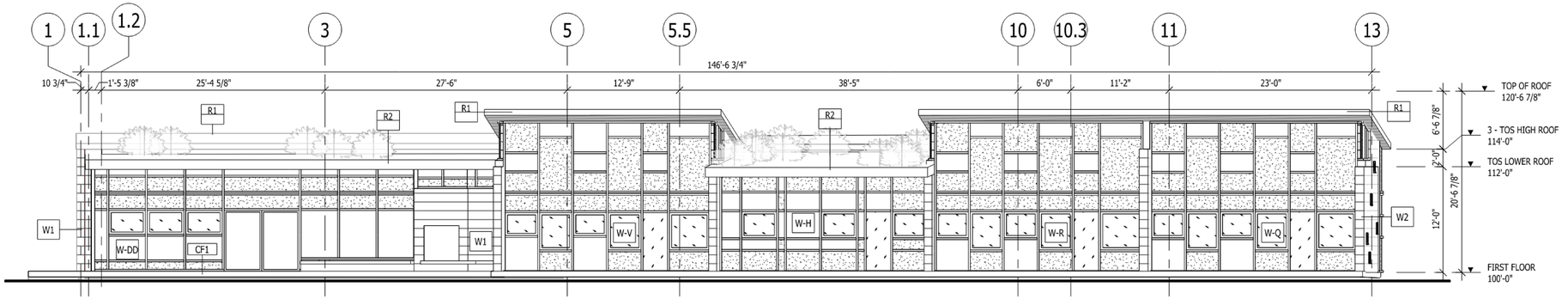

4 A-101 **SOUTH PHASE 01**
SCALE: 1/8" = 1'-0"

GRANGE AUDOBON CENTER

ELEVATIONS

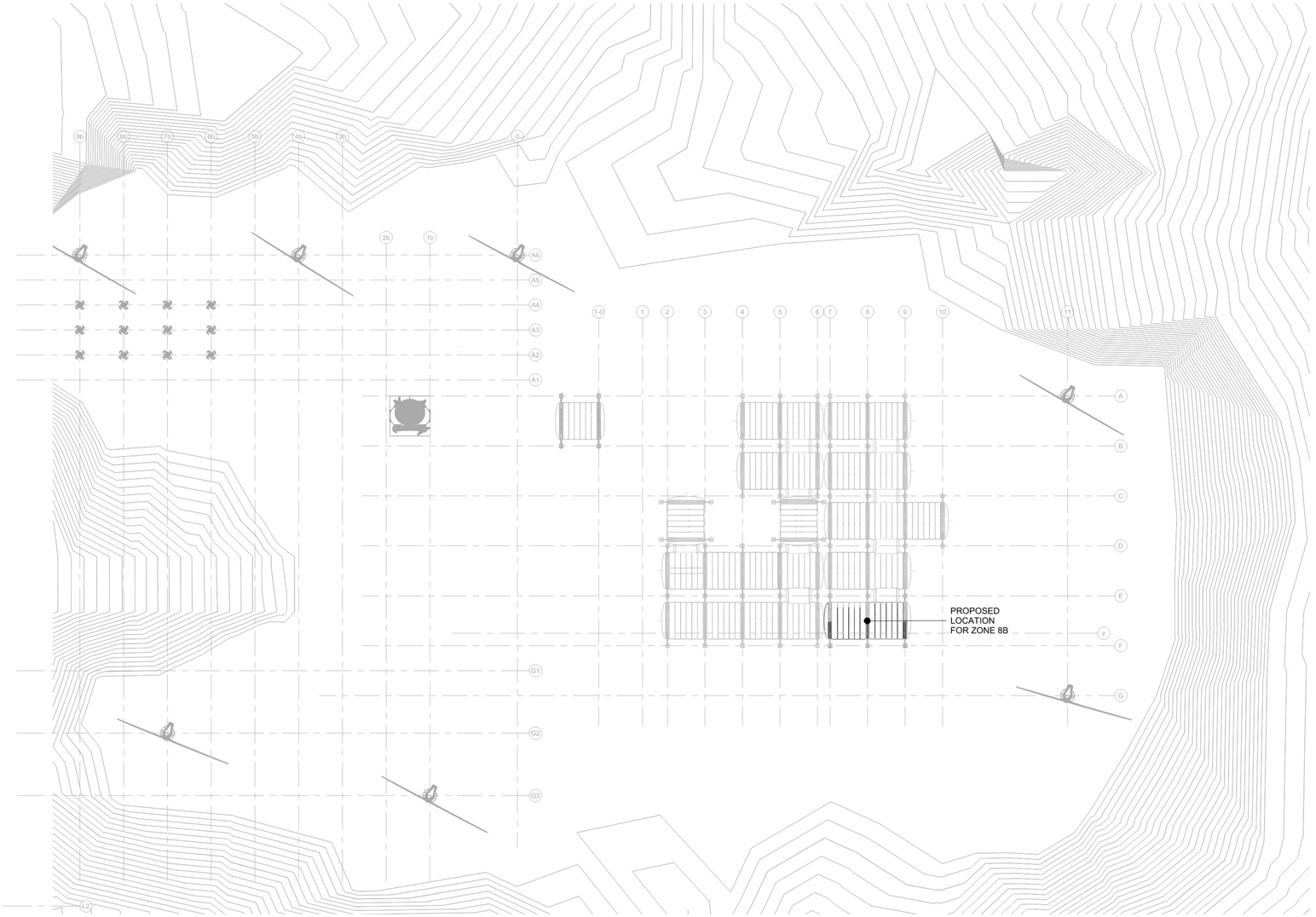

PROJECT

M.A.R.S HABITAT CONCEPT PROPOSAL
VCC CAD/BIM CAPSTONE PROGRAM

SITE

CERANUS THOLUS VOLCANO
NORTH EAST THARSIS
240 N 970 W

GENERAL NOTES:

1. ALL STEEL SHALL BE MADE OF 6061-T6 ALUMINUM.
2. THE RING STRUCTURE SHALL BE DIVIDED INTO 8 SEGMENTS TO BE FIELD BOLTED TOGETHER WITH THE ANCHORS.
3. ALL SEGMENT PARTS ARE TO BE SHOP WELDED.
4. ALL BOLT HOLES SHALL BE 13/16" DIA UNO.
5. ALL WALLS, WALL PARTITIONS AND FLOORING SHALL BE MADE OF REINFORCED FIBRE GLASS.

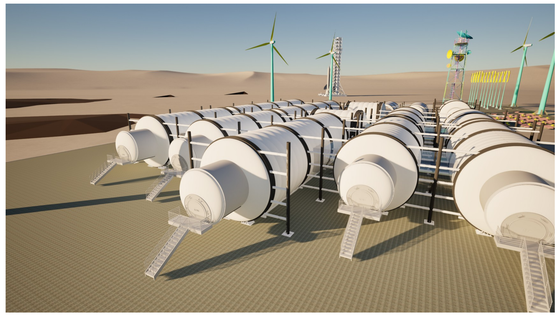

M.A.R.S.
HABITAT PROJECT

ZONE 8B - DORMS

NO.	DATE	REVISION	APP.

VANCOUVER COMMUNITY COLLEGE
CAD & BIM TECH DEPARTMENT
VANCOUVER, BC.

VCC

TITLE

ZONE 8B - DORMS
SITE PLAN

DRAWN BY:	CHRIS S
SCALE:	1" = 40'-0"
CHECKER:	RON PALMA
DATE:	03/18/24

DRAWING NO.: **A001**

REV.:

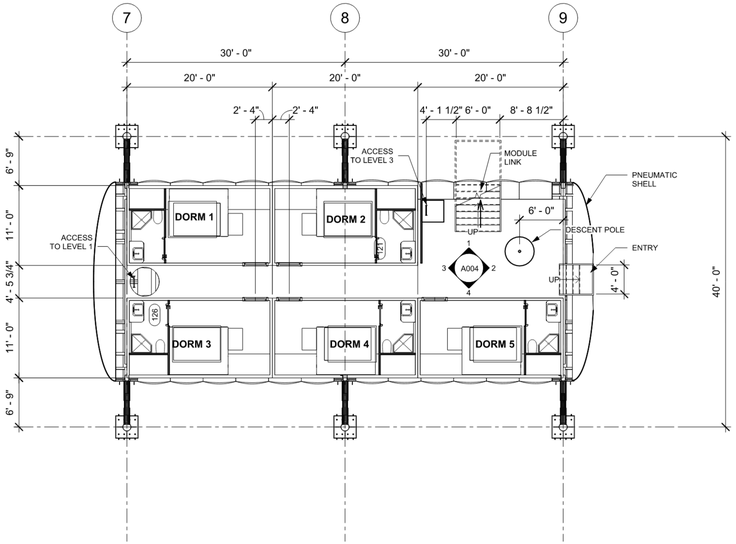

1 A002 T.O. LEVEL 2
1/8" = 1'-0"

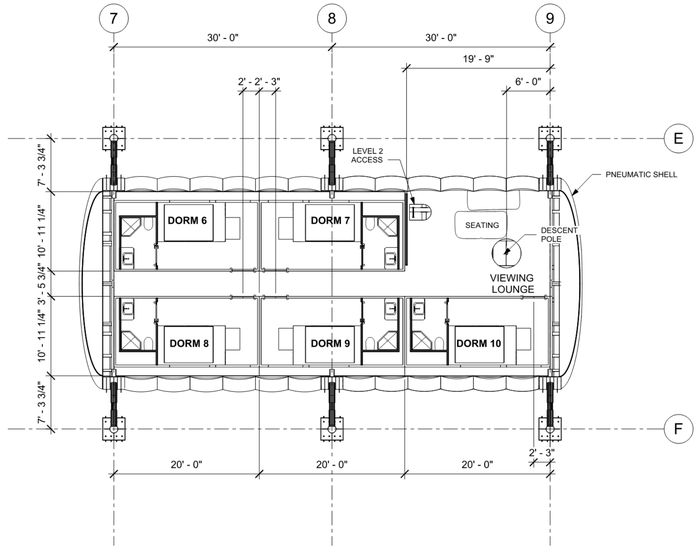

2 A002 T.O. LEVEL 3
1/8" = 1'-0"

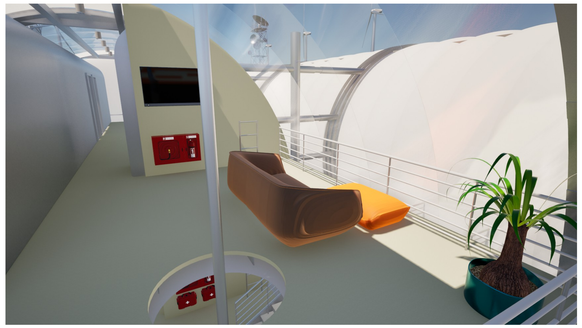

LEVEL 3

LEVEL 2

GENERAL NOTES:

1. ALL STEEL SHALL BE MADE OF 6061-T6 ALUMINUM.
2. THE RING STRUCTURE SHALL BE DIVIDED INTO 8 SEGMENTS TO BE FIELD BOLTED TOGETHER WITH THE ANCHORS.
3. ALL SEGMENT PARTS ARE TO BE SHOP WELDED.
4. ALL BOLT HOLES SHALL BE 13/16" DIA UNO.
5. ALL WALLS, WALL PARTITIONS AND FLOORING SHALL BE MADE OF REINFORCED FIBRE GLASS.

M.A.R.S. HABITAT PROJECT

ZONE 8B - DORMS

NO.	DATE	REVISION	APP.

VANCOUVER COMMUNITY COLLEGE
CAD & BIM TECH DEPARTMENT
VANCOUVER, BC.

VCC

TITLE

ZONE 8B - DORMS
FLOOR PLAN

DRAWN BY:	CHRIS S	DRAWING NO.	REV.
SCALE:	1/8" = 1'-0"	A002	
CHECKER:	RON PALMA		
DATE:	03/18/24		

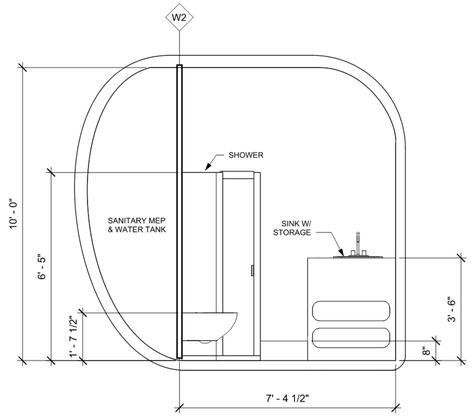

1 A006 TOILET & SHOWER
1/2" = 1'-0"

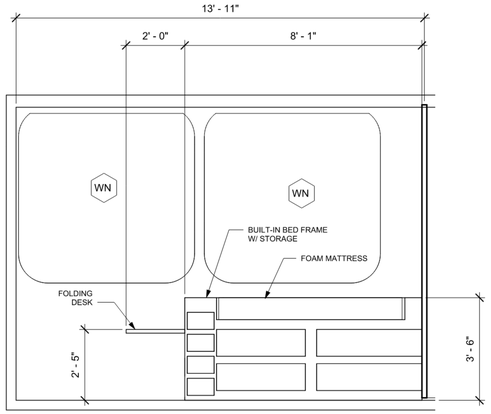

2 A006 BED & STORAGE
1/2" = 1'-0"

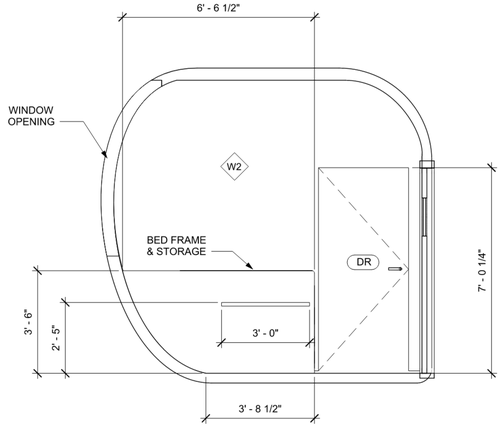

3 A006 WORK NOOK
1/2" = 1'-0"

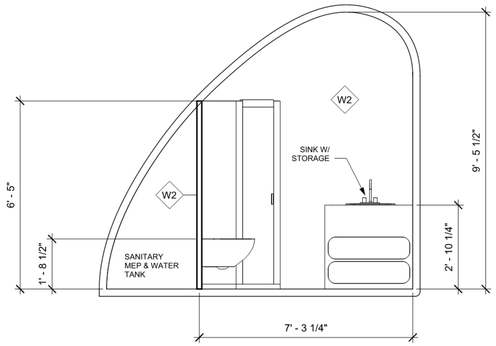

4 A006 TOILET & SHOWER
1/2" = 1'-0"

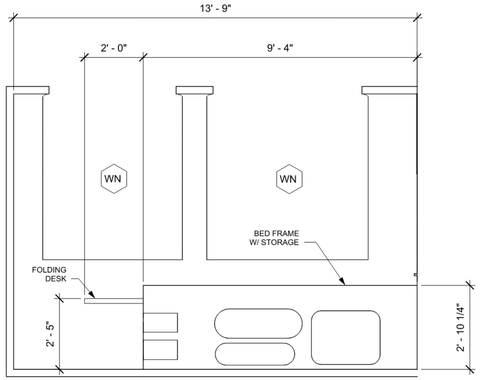

5 A006 BED & STORAGE
1/2" = 1'-0"

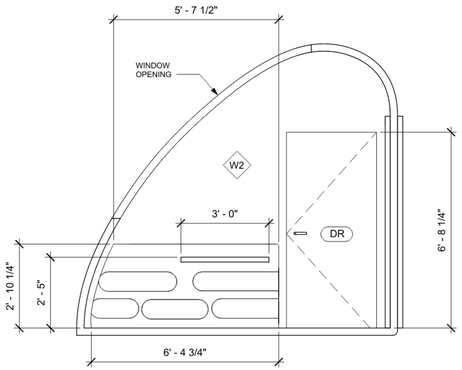

6 A006 WORK NOOK
1/2" = 1'-0"

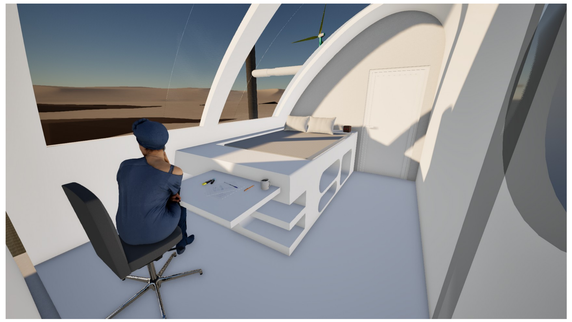

M.A.R.S.
HABITAT PROJECT
ZONE 8B - DORMS

NO.	DATE	REVISION	APP.

VANCOUVER COMMUNITY COLLEGE
CAD & BIM TECH DEPARTMENT
VANCOUVER, BC.

VCC

TITLE
ZONE 8B - DORMS
MODULE INTERIOR DETAILS

DRAWN BY:	CHRIS S	DRAWING NO.	REV.
SCALE:	1/2" = 1'-0"	A006	
CHECKER:	RON PALMA		
DATE:	03/25/24		

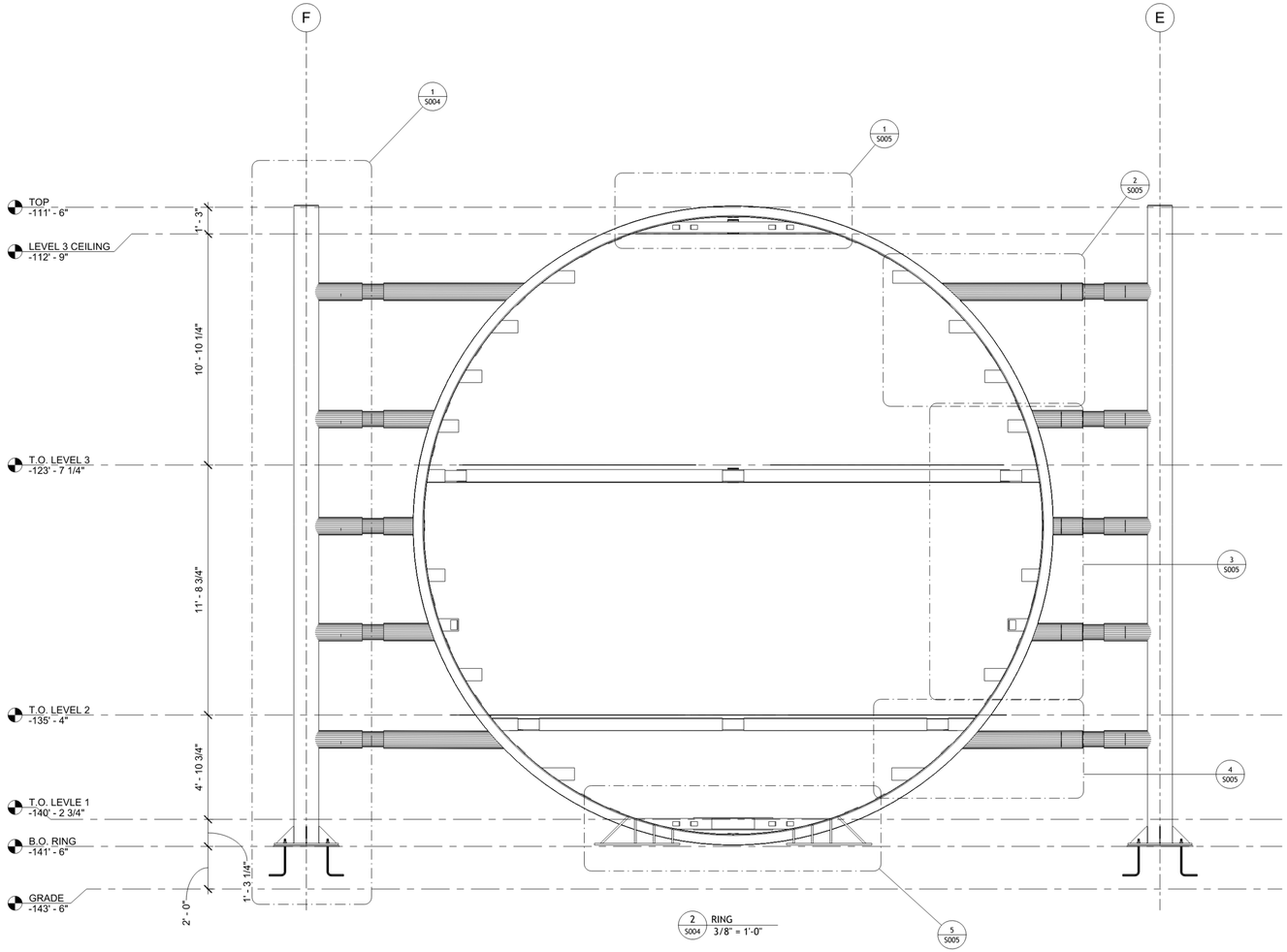

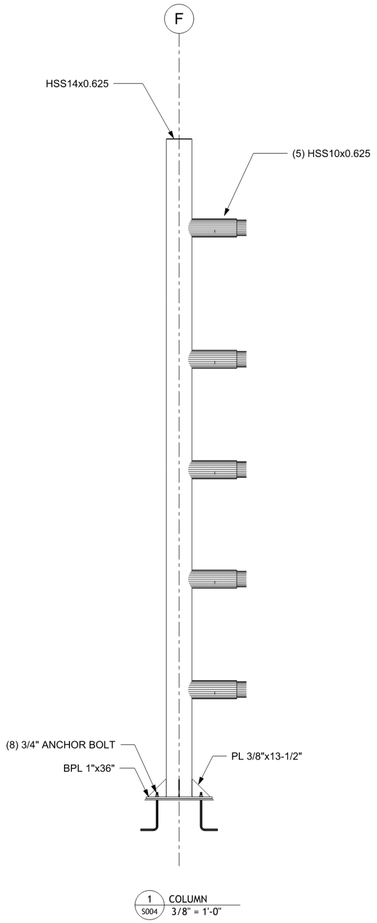

NOTE:

1. ALL STEEL SHALL BE MADE OF 6061-T6 ALUMINUM.
2. THE RING STRUCTURE SHALL BE DIVIDED INTO 8 SEGMENTS TO BE FIELD BOLTED TOGETHER WITH THE ANCHORS.
3. ALL SEGMENT PARTS ARE TO BE SHOP WELDED.
4. ALL BOLT HOLES SHALL BE 13/16" DIA UNO.

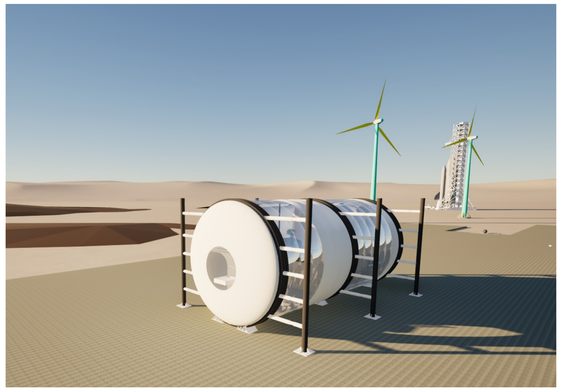

M.A.R.S.
HABITAT PROJECT
ZONE 8B - DORMS

NO.	DATE	REVISION	APP.

VANCOUVER COMMUNITY COLLEGE
CAD & BIM TECH DEPARTMENT
VANCOUVER, BC.

VCC

TITLE

ZONE 8B - DORMS
RING STRUCTURE

DRAWN BY:	CHRIS S	DRAWING NO.	REV.
SCALE:	3/8" = 1'-0"	S004	
CHECKER:	RON PALMA		
DATE:	03/27/24		