8 in bar

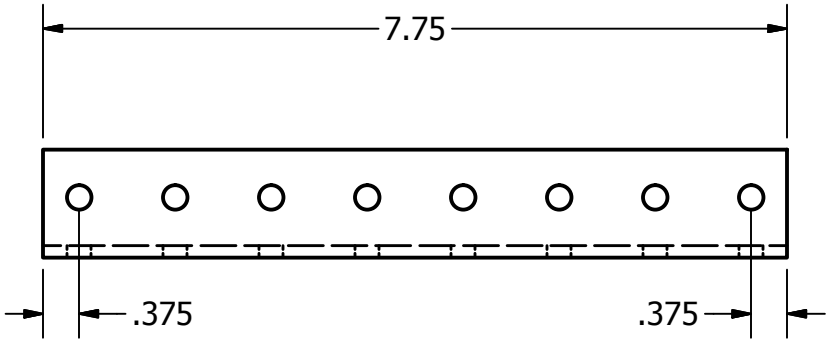

All all bars except 8 in bar exact length of name, hole centers $\frac{1}{2}$ in from edge.

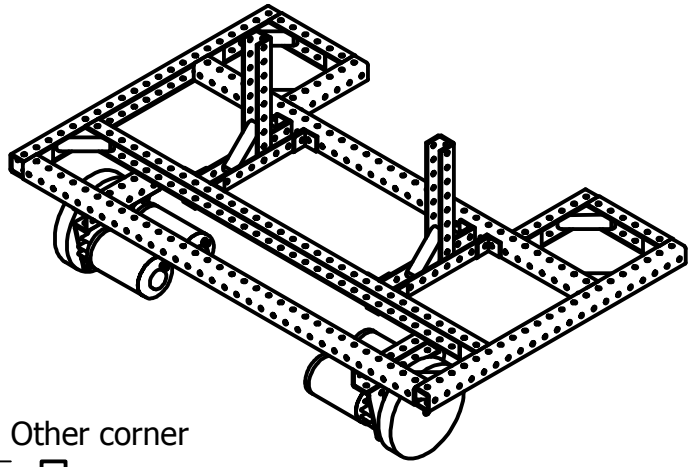

Other corner

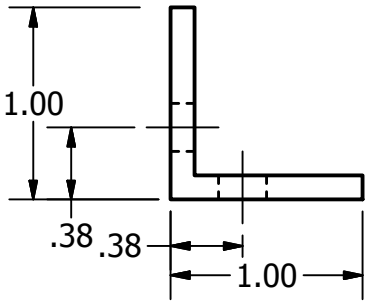

2 hole plate

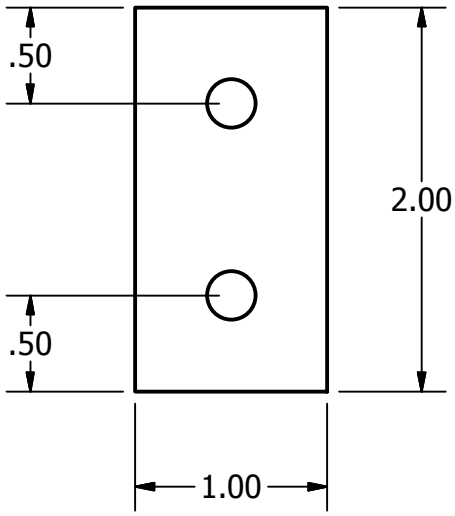

PARTS LIST

ITEM	QTY	PART NUMBER	DESCRIPTION
1	3	32 in bar	
2	2	21 in bar	
3	14	Corner	
4	6	6 in bar	
5	4	8 in bar	
6	8	Other corner	
7	4	2 hole plate	
8	2	CIMple Box	
9	1	Inner	
10	4	rod	
11	1	Outer	
12	2	wheel	