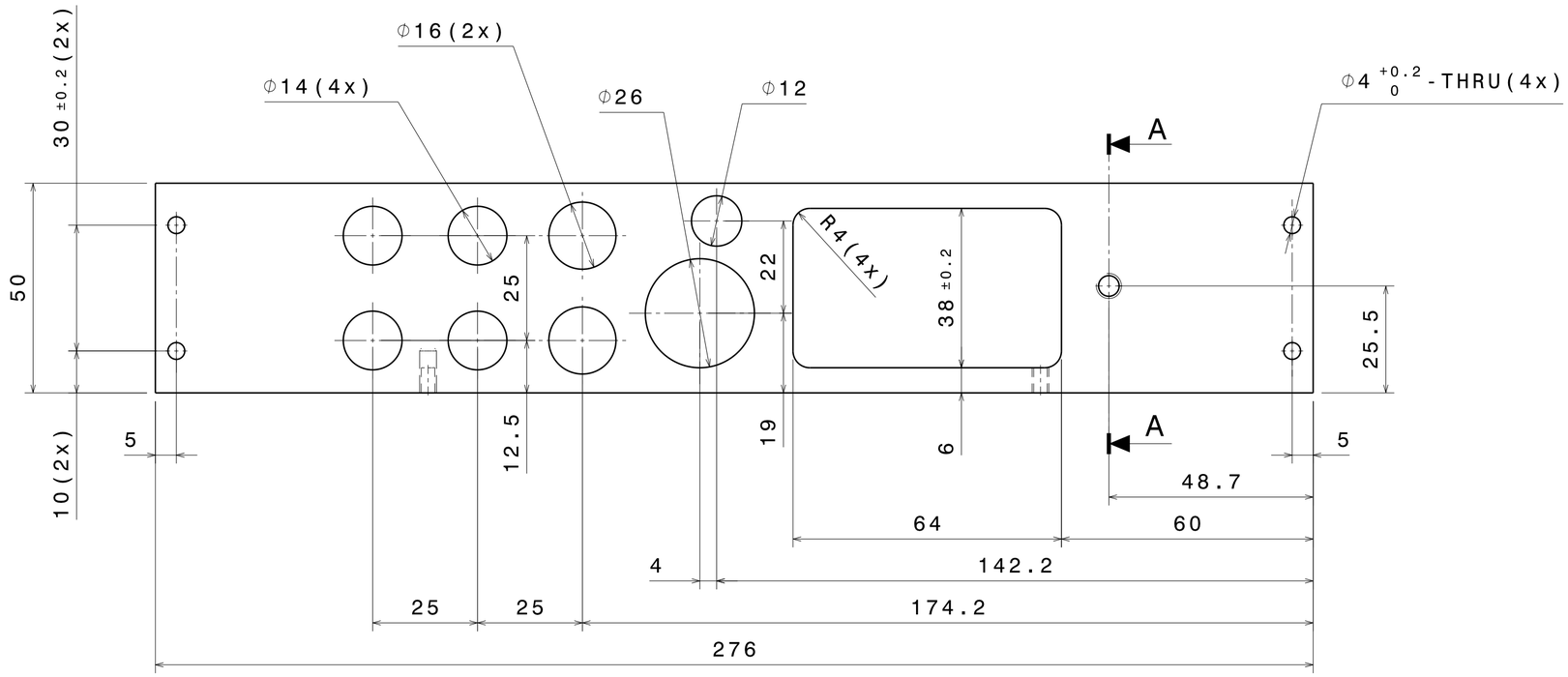

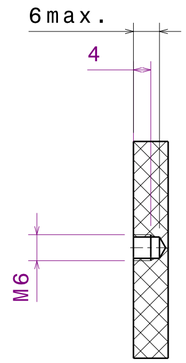

Section view A-A
Scale: 1:1

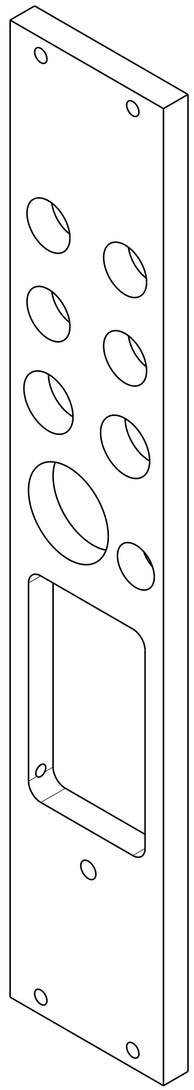

Isometric view
Scale: 1:1

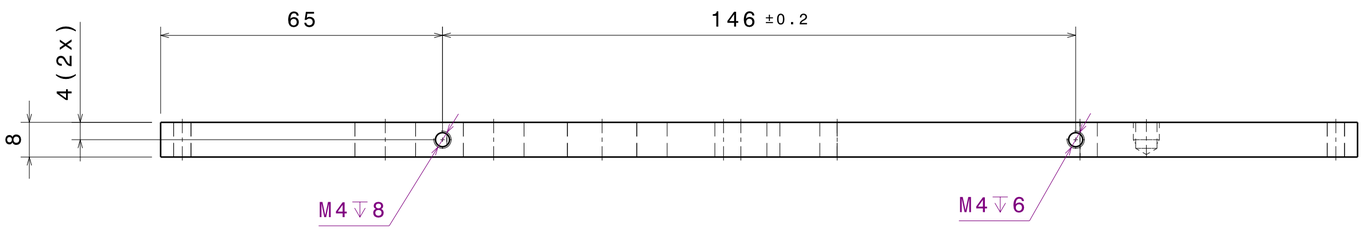

AS BUILT

General tolerances unless otherwise stated according to :ISO-2768-mK-E Geometrical tolerances unless otherwise stated according to:ISO-8015-E Rougness unless otherwise stated according to :ISO-1302	±0.1	Material: PVC (Black)	
Project: R&D Spark Chamber	Units: mm	Date: 15/02/2010	Revision: A
Library: Large Spark Chamber	Size: A2	Engineer: A. Korporaal	
Name: Patch panel Support		Checked: A. Korporaal	
		Item number: AA0302	Status: Released
NIKHEF National Institute for Subatomic Physics Science Park 105, 1098XG Amsterdam		Nikhef number: 40091-ME-00187	

This drawing may not be used for commercial purposes without written authorisation.