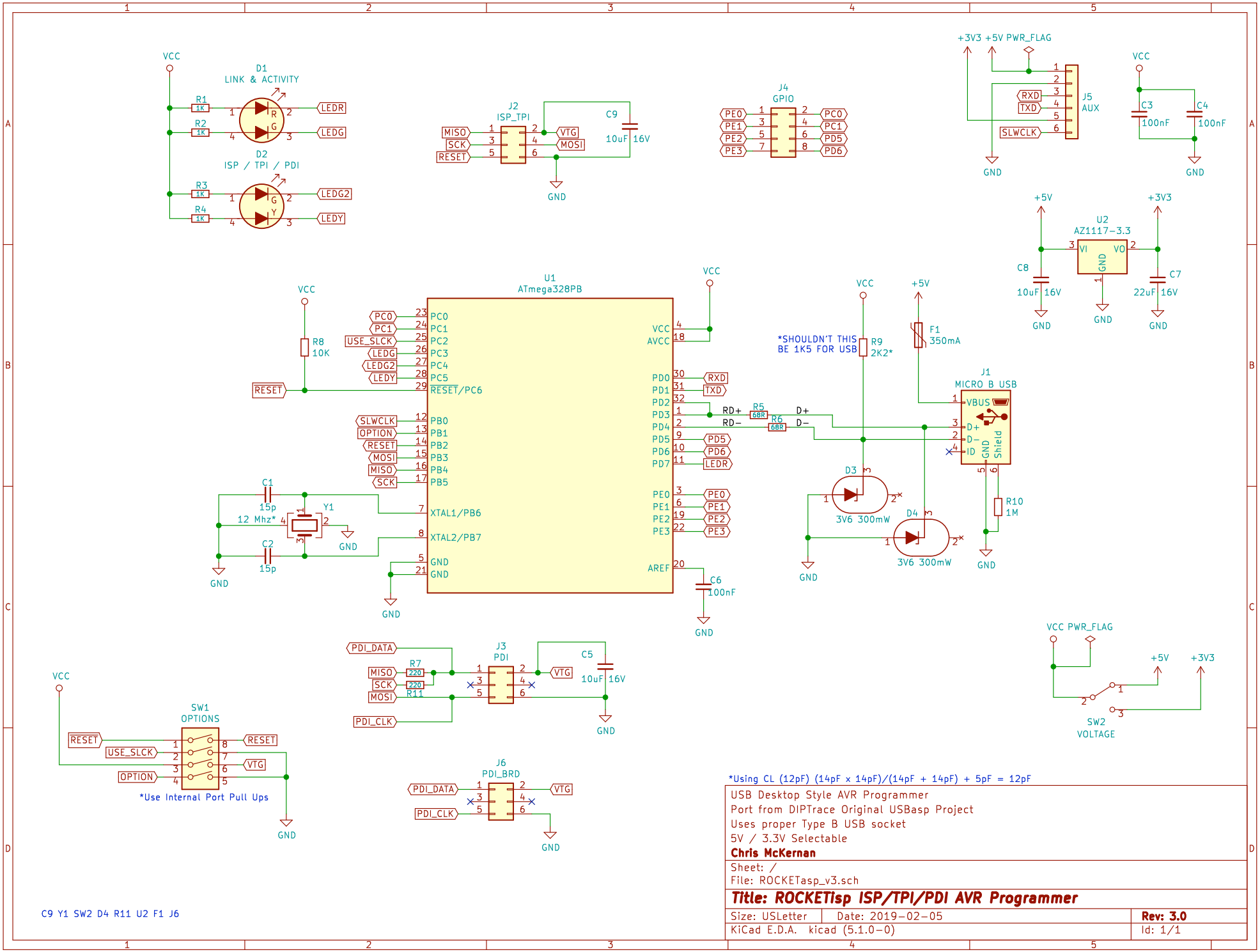
D1
LINK & ACTIVITY
R1 1K
R2 1K
LEDR
LEDG
D2
ISP / TPI / PDI
R3 1K
R4 1K
LEDG2
LEDY
J2
ISP_TPI
MISO
SCK
RESET
VTG
MOSI
C9
10uF 16V
J4
GPIO
PE0
PE1
PE2
PE3
PC0
PC1
PD5
PD6
+3V3 +5V PWR_FLAG
J5
AUX
RXD
TXD
SLWCLK
C3 100nF
C4 100nF
U2
AZ1117-3.3
VI
VO
GND
C8 10uF 16V
C7 22uF 16V
U1
ATmega328PB
PC0
PC1
USE_SLCK
LEDG
LEDG2
LEDY
RESET/PC6
PB0
PB1
PB2
PB3
PB4
PB5
XTAL1/PB6
XTAL2/PB7
VCC
AVCC
PD0
PD1
PD2
PD3
PD4
PD5
PD6
PD7
AREF
R8 10K
C1 15p
C2 15p
Y1
12 Mhz*
C6 100nF
R5 68R
R6 68R
RD+
RD−
D+
D−
*SHOULDN'T THIS BE 1K5 FOR USB
R9 2K2*
F1 350mA
J1
MICRO B USB
VBUS
D+
D−
ID
Shield
D3 3V6 300mW
D4 3V6 300mW
R10 1M
J3
PDI
PDI_DATA
PDI_CLK
R7 220
R11 220
C5 10uF 16V
VCC PWR_FLAG
SW2
VOLTAGE
SW1
OPTIONS
OPTION
*Use Internal Port Pull Ups
J6
PDI_BRD
*Using CL (12pF) (14pF x 14pF)/(14pF + 14pF) + 5pF = 12pF
USB Desktop Style AVR Programmer
Port from DIPTrace Original USBasp Project
Uses proper Type B USB socket
5V / 3.3V Selectable
Chris McKernan
Sheet: /
File: ROCKETasp_v3.sch
Title: ROCKETisp ISP/TPI/PDI AVR Programmer
Size: USLetter
Date: 2019-02-05
Rev: 3.0
KiCad E.D.A. kicad (5.1.0-0)
Id: 1/1
C9 Y1 SW2 D4 R11 U2 F1 J6