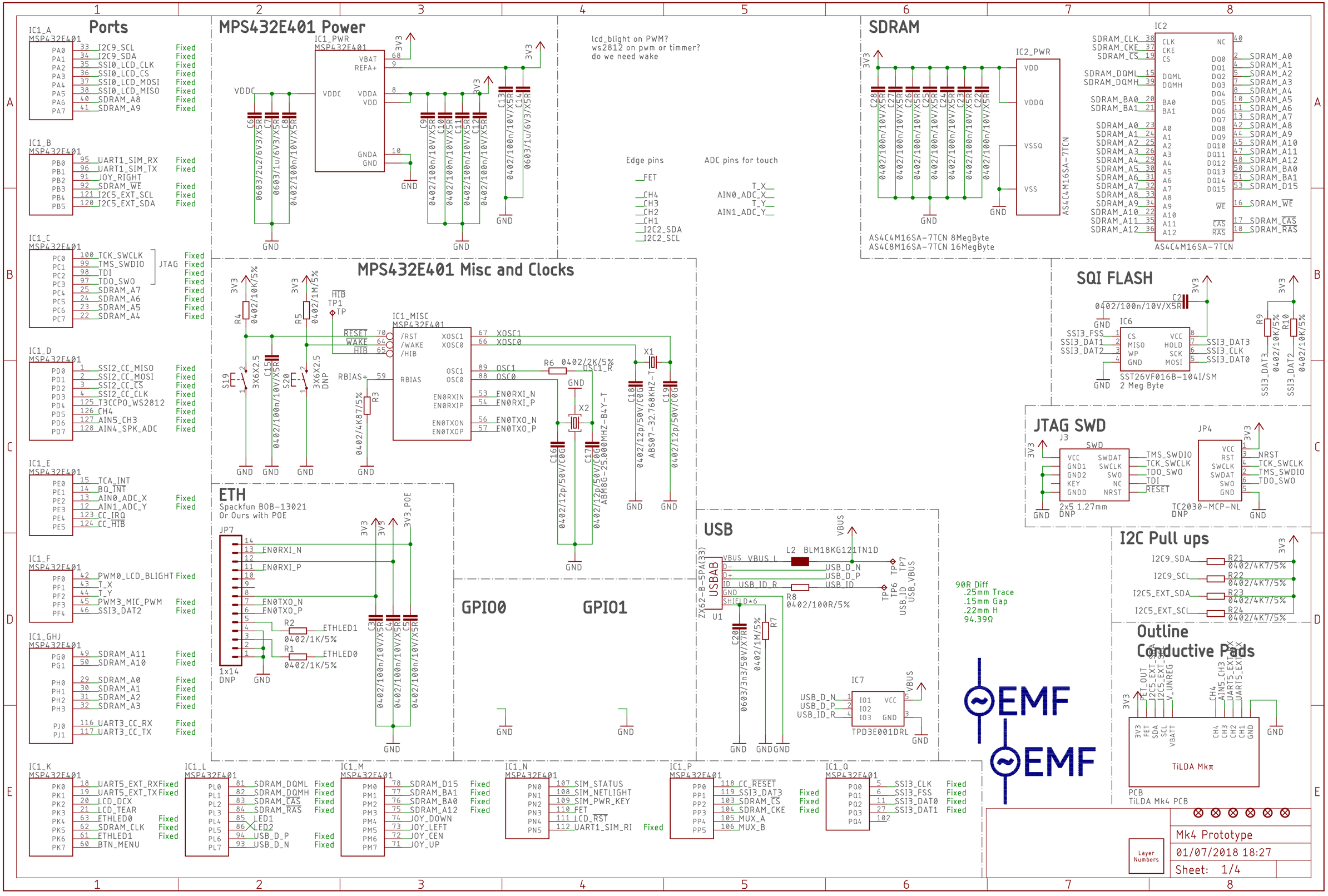
Ports
IC1_A MSP432E401
PA0 33 I2C9_SCL Fixed
PA1 34 I2C9_SDA Fixed
PA2 35 SSI0_LCD_CLK Fixed
PA3 36 SSI0_LCD_CS Fixed
PA4 37 SSI0_LCD_MOSI Fixed
PA5 38 SSI0_LCD_MISO Fixed
PA6 40 SDRAM_A8 Fixed
PA7 41 SDRAM_A9 Fixed
IC1_B MSP432E401
PB0 95 UART1_SIM_RX Fixed
PB1 96 UART1_SIM_TX Fixed
PB2 91 JOY_RIGHT
PB3 92 SDRAM_WE Fixed
PB4 121 I2C5_EXT_SCL Fixed
PB5 120 I2C5_EXT_SDA Fixed
IC1_C MSP432E401
PC0 100 TCK_SWCLK JTAG Fixed
PC1 99 TMS_SWDIO Fixed
PC2 98 TDI Fixed
PC3 97 TDO_SWO Fixed
PC4 25 SDRAM_A7 Fixed
PC5 24 SDRAM_A6 Fixed
PC6 23 SDRAM_A5 Fixed
PC7 22 SDRAM_A4 Fixed
IC1_D MSP432E401
PD0 1 SSI2_CC_MISO Fixed
PD1 2 SSI2_CC_MOSI Fixed
PD2 3 SSI2_CC_CS Fixed
PD3 4 SSI2_CC_CLK Fixed
PD4 125 T3CCP0_WS2812 Fixed
PD5 126 CH4 Fixed
PD6 127 AIN5_CH3 Fixed
PD7 128 AIN4_SPK_ADC Fixed
IC1_E MSP432E401
PE0 15 TCA_INT
PE1 14 BQ_INT
PE2 13 AIN0_ADC_X Fixed
PE3 12 AIN1_ADC_Y Fixed
PE4 123 CC_IRQ
PE5 124 CC_HIB
IC1_F MSP432E401
PF0 42 PWM0_LCD_BLIGHT Fixed
PF1 43 T_X
PF2 44 T_Y
PF3 45 PWM3_MIC_PWM Fixed
PF4 46 SSI3_DAT2 Fixed
IC1_GHJ MSP432E401
PG0 49 SDRAM_A11 Fixed
PG1 50 SDRAM_A10 Fixed
PH0 29 SDRAM_A0 Fixed
PH1 30 SDRAM_A1 Fixed
PH2 31 SDRAM_A2 Fixed
PH3 32 SDRAM_A3 Fixed
PJ0 116 UART3_CC_RX Fixed
PJ1 117 UART3_CC_TX Fixed
IC1_K MSP432E401
PK0 18 UART5_EXT_RX Fixed
PK1 19 UART5_EXT_TX Fixed
PK2 20 LCD_DCX
PK3 21 LCD_TEAR
PK4 63 ETHLED0 Fixed
PK5 62 SDRAM_CLK Fixed
PK6 61 ETHLED1 Fixed
PK7 60 BTN_MENU
IC1_L MSP432E401
PL0 81 SDRAM_DQML Fixed
PL1 82 SDRAM_DQMH Fixed
PL2 83 SDRAM_CAS Fixed
PL3 84 SDRAM_RAS Fixed
PL4 85 LED1
PL5 86 LED2
PL6 94 USB_D_P Fixed
PL7 93 USB_D_N Fixed
IC1_M MSP432E401
PM0 78 SDRAM_D15 Fixed
PM1 77 SDRAM_BA1 Fixed
PM2 76 SDRAM_BA0 Fixed
PM3 75 SDRAM_A12 Fixed
PM4 74 JOY_DOWN
PM5 73 JOY_LEFT
PM6 72 JOY_CEN
PM7 71 JOY_UP
IC1_N MSP432E401
PN0 107 SIM_STATUS
PN1 108 SIM_NETLIGHT
PN2 109 SIM_PWR_KEY
PN3 110 FET
PN4 111 LCD_RST
PN5 112 UART1_SIM_RI Fixed
IC1_P MSP432E401
PP0 118 CC_RESET
PP1 119 SSI3_DAT3 Fixed
PP2 103 SDRAM_CS Fixed
PP3 104 SDRAM_CKE Fixed
PP4 105 MUX_A
PP5 106 MUX_B
IC1_Q MSP432E401
PQ0 5 SSI3_CLK Fixed
PQ1 6 SSI3_FSS Fixed
PQ2 11 SSI3_DAT0 Fixed
PQ3 27 SSI3_DAT1 Fixed
PQ4 102
MPS432E401 Power
IC1_PWR MSP432E401
VBAT
REFA+
VDDC
VDDA
VDD
GNDA
GND
VDDC
3V3
GND
C6 0603/2u2/6V3/X5R
C7 0603/1u/6V3/X5R
C8 0402/100n/10V/X5R
C9 0402/100n/10V/X5R
C10 0402/100n/10V/X5R
C11 0402/100n/10V/X5R
C12 0402/100n/10V/X5R
C13 0402/100n/10V/X5R
C14 0603/1u/6V3/X5R
lcd_blight on PWM?
ws2812 on pwm or timmer?
do we need wake
Edge pins
FET
CH4
CH3
CH2
CH1
I2C2_SDA
I2C2_SCL
ADC pins for touch
T_X
AIN0_ADC_X
T_Y
AIN1_ADC_Y
MPS432E401 Misc and Clocks
IC1_MISC MSP432E401
/RST
/WAKE
/HIB
XOSC1
XOSC0
OSC1
OSC0
RBIAS
EN0RXIN
EN0RXIP
EN0TXON
EN0TXOP
RESET
WAKE
HIB
TP1 TP
R4 0402/10K/5%
R5 0402/1M/5%
S19 3X6X2.5
S20 3X6X2.5 DNP
C15 0402/100n/10V/X5R
RBIAS+
R3 0402/4K87/5%
R6 0402/2K/5%
X1 ABS07-32.768KHZ-T
X2 ABM8G-25.000MHZ-B4Y-T
C16 0402/12p/50V/C0G
C17 0402/12p/50V/C0G
C18 0402/12p/50V/C0G
C19 0402/12p/50V/C0G
ETH
Spackfun BOB-13021
Or Ours with POE
JP7
1x14
DNP
EN0RXI_N
EN0RXI_P
EN0TXO_N
EN0TXO_P
R2 0402/1K/5%
ETHLED1
R1 0402/1K/5%
ETHLED0
3V3_POE
C3 0402/100n/10V/X5R
C4 0402/100n/10V/X5R
C5 0402/100n/10V/X5R
GPIO0
GPIO1
USB
USBAB ZX62-B-5PA(33)
U1
VBUS
VBUS_L
D-
D+
ID
USB_ID_R
GND
SHIELD*6
L2 BLM18KG121TN1D
USB_D_N
USB_D_P
USB_ID
R8 0402/100R/5%
C20 0603/3n3/50V/X7R
R7 0402/1M/5%
IC7 TPD3E001DRL
IO1
IO2
IO3
VCC
GND
90R Diff
.25mm Trace
.15mm Gap
.22mm H
94.39Ω
SDRAM
IC2_PWR
VDD
VDDQ
VSSQ
VSS
C28 0402/100n/10V/X5R
C27 0402/100n/10V/X5R
C26 0402/100n/10V/X5R
C25 0402/100n/10V/X5R
C24 0402/100n/10V/X5R
C23 0402/100n/10V/X5R
C22 0402/100n/10V/X5R
AS4C4M16SA-7TCN 8MegByte
AS4C8M16SA-7TCN 16MegByte
IC2 AS4C4M16SA-7TCN
CLK
CKE
CS
DQML
DQMH
BA0
BA1
A0
A1
A2
A3
A4
A5
A6
A7
A8
A9
A10
A11
A12
NC
DQ0
DQ1
DQ2
DQ3
DQ4
DQ5
DQ6
DQ7
DQ8
DQ9
DQ10
DQ11
DQ12
DQ13
DQ14
DQ15
WE
CAS
RAS
SDRAM_CLK
SDRAM_CKE
SDRAM_CS
SDRAM_DQML
SDRAM_DQMH
SDRAM_BA0
SDRAM_BA1
SDRAM_A0
SDRAM_A1
SDRAM_A2
SDRAM_A3
SDRAM_A4
SDRAM_A5
SDRAM_A6
SDRAM_A7
SDRAM_A8
SDRAM_A9
SDRAM_A10
SDRAM_A11
SDRAM_A12
SDRAM_D15
SDRAM_WE
SDRAM_CAS
SDRAM_RAS
SQI FLASH
IC6 SST26VF016B-104I/SM
2 Meg Byte
CS
MISO
WP
GND
VCC
HOLD
SCK
MOSI
SSI3_FSS
SSI3_DAT1
SSI3_DAT2
SSI3_DAT3
SSI3_CLK
SSI3_DAT0
C2 0402/100n/10V/X5R
R9 0402/10K/5%
R10 0402/10K/5%
JTAG SWD
J3 2x5 1.27mm
DNP
SWD
VCC
GND1
GND2
KEY
GNDD
SWDAT
SWCLK
SWO
NC
NRST
TMS_SWDIO
TCK_SWCLK
TDO_SWO
TDI
RESET
JP4 TC2030-MCP-NL
DNP
VCC
RST
SWCLK
SWDAT
SWO
GND
NRST
TCK_SWCLK
TMS_SWDIO
TDO_SWO
I2C Pull ups
I2C9_SDA R21 0402/4K7/5%
I2C9_SCL R22 0402/4K7/5%
I2C5_EXT_SDA R23 0402/4K7/5%
I2C5_EXT_SCL R24 0402/4K7/5%
Outline
Conductive Pads
3V3
FET_OUT
I2C5_EXT_SDA
I2C5_EXT_SCL
V_UNREG
CH4
AIN5_CH3
UART5_EXT_RX
UART5_EXT_TX
3V3
FET
SDA
SCL
VBATT
CH4
CH3
CH2
CH1
GND
TiLDA Mkπ
PCB
TiLDA Mk4 PCB
EMF
EMF
Layer Numbers
Mk4 Prototype
01/07/2018 18:27
Sheet: 1/4

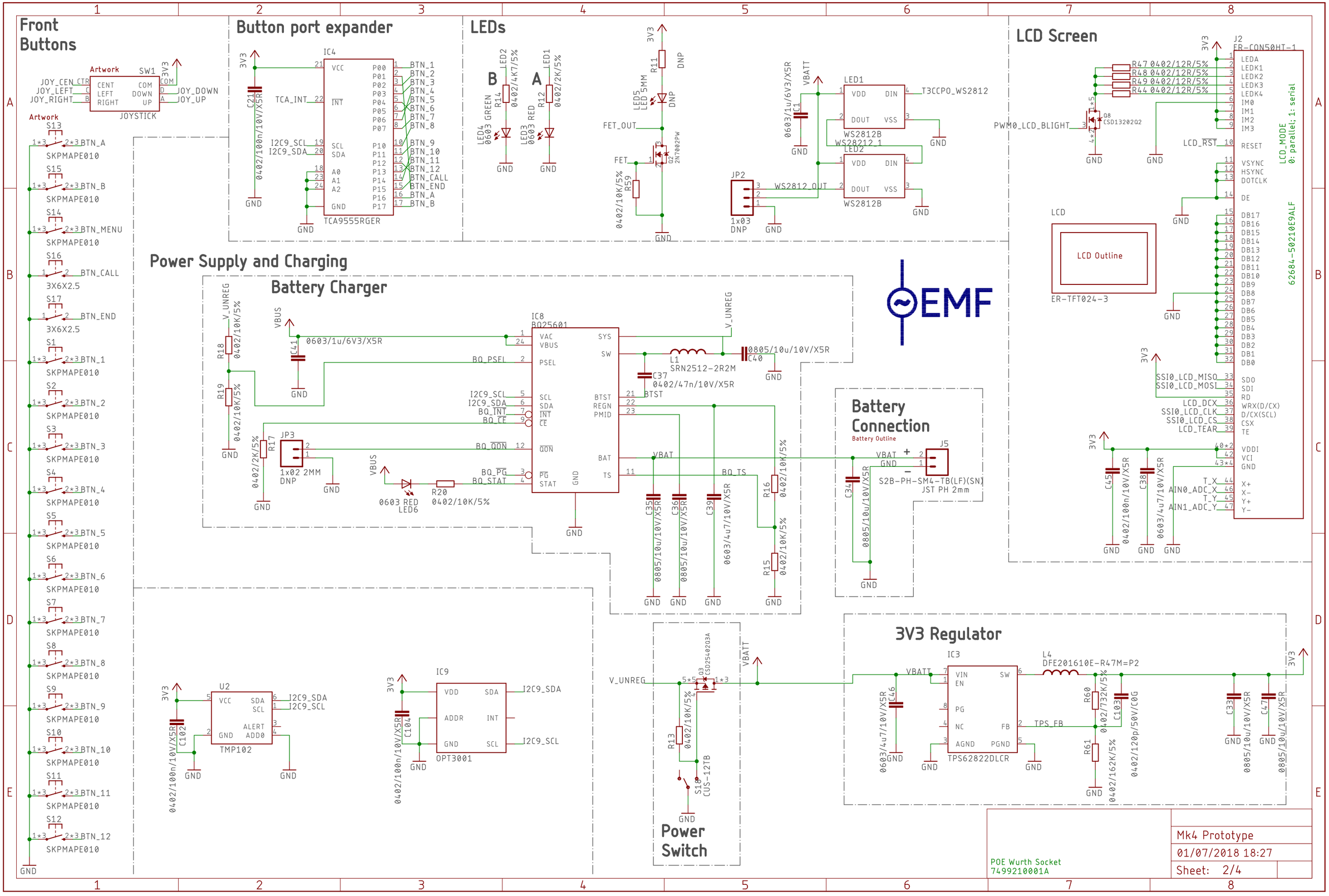
Front Buttons
Button port expander
LEDs
LCD Screen
Power Supply and Charging
Battery Charger
Battery Connection
3V3 Regulator
Power Switch
JOYSTICK
TCA9555RGER
TMP102
OPT3001
TPS62822DLCR
ER-TFT024-3
LCD Outline
Mk4 Prototype
01/07/2018 18:27
Sheet: 2/4
POE Wurth Socket
7499210001A

WiFi

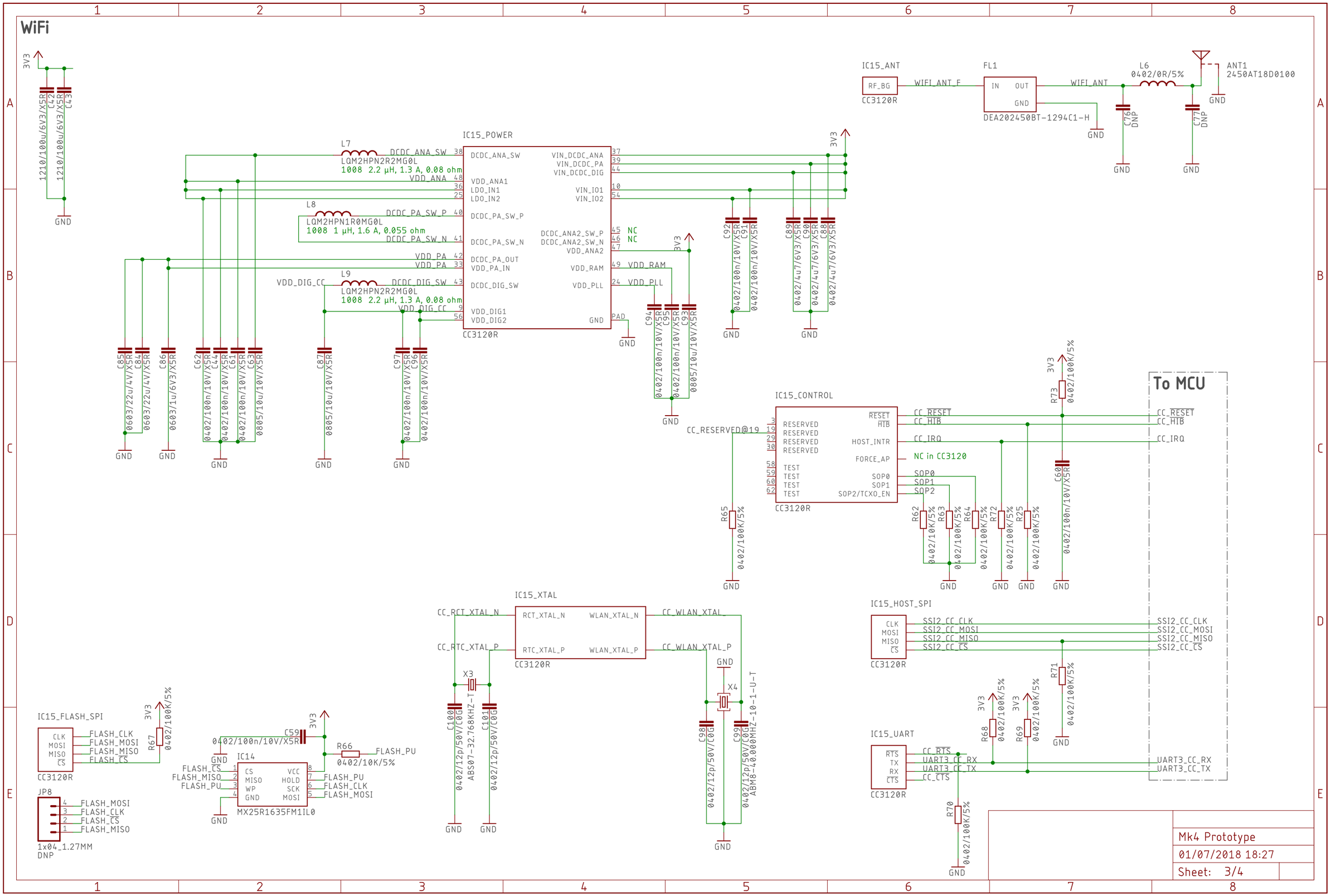
IC15_POWER
CC3120R
DCDC_ANA_SW
VDD_ANA1
LDO_IN1
LDO_IN2
DCDC_PA_SW_P
DCDC_PA_SW_N
DCDC_PA_OUT
VDD_PA_IN
DCDC_DIG_SW
VDD_DIG1
VDD_DIG2
VIN_DCDC_ANA
VIN_DCDC_PA
VIN_DCDC_DIG
VIN_IO1
VIN_IO2
DCDC_ANA2_SW_P
DCDC_ANA2_SW_N
VDD_ANA2
VDD_RAM
VDD_PLL
GND
PAD
L7
LQM2HPN2R2MG0L
1008 2.2 µH, 1.3 A, 0.08 ohm
L8
LQM2HPN1R0MG0L
1008 1 µH, 1.6 A, 0.055 ohm
L9
VDD_ANA
VDD_PA
VDD_DIG_CC
VDD_RAM
VDD_PLL
NC
IC15_ANT
RF_BG
CC3120R
WIFI_ANT_F
FL1
IN
OUT
GND
DEA202450BT-1294C1-H
WIFI_ANT
L6
0402/0R/5%
ANT1
2450AT18D0100
C76
DNP
C77
DNP
IC15_CONTROL
RESERVED
TEST
RESET
HIB
HOST_INTR
FORCE_AP
SOP0
SOP1
SOP2/TCXO_EN
CC_RESERVED@19
NC in CC3120
CC_RESET
CC_HIB
CC_IRQ
R73
0402/100K/5%
R65
R62
R63
R64
R72
R25
C60
To MCU
IC15_HOST_SPI
CLK
MOSI
MISO
CS
SSI2_CC_CLK
SSI2_CC_MOSI
SSI2_CC_MISO
SSI2_CC_CS
IC15_XTAL
RCT_XTAL_N
RTC_XTAL_P
WLAN_XTAL_N
WLAN_XTAL_P
CC_RCT_XTAL_N
CC_RTC_XTAL_P
CC_WLAN_XTAL
CC_WLAN_XTAL_P
X3
X4
ABS07-32.768KHZ-T
ABM8-40.000MHZ-10-1-U-T
IC15_FLASH_SPI
FLASH_CLK
FLASH_MOSI
FLASH_MISO
FLASH_CS
R67
IC14
MX25R1635FM1IL0
C59
R66
0402/10K/5%
FLASH_PU
JP8
1x04_1.27MM
DNP
IC15_UART
RTS
TX
RX
CTS
UART3_CC_RX
UART3_CC_TX
R68
R69
R71
R70
Mk4 Prototype
01/07/2018 18:27
Sheet: 3/4

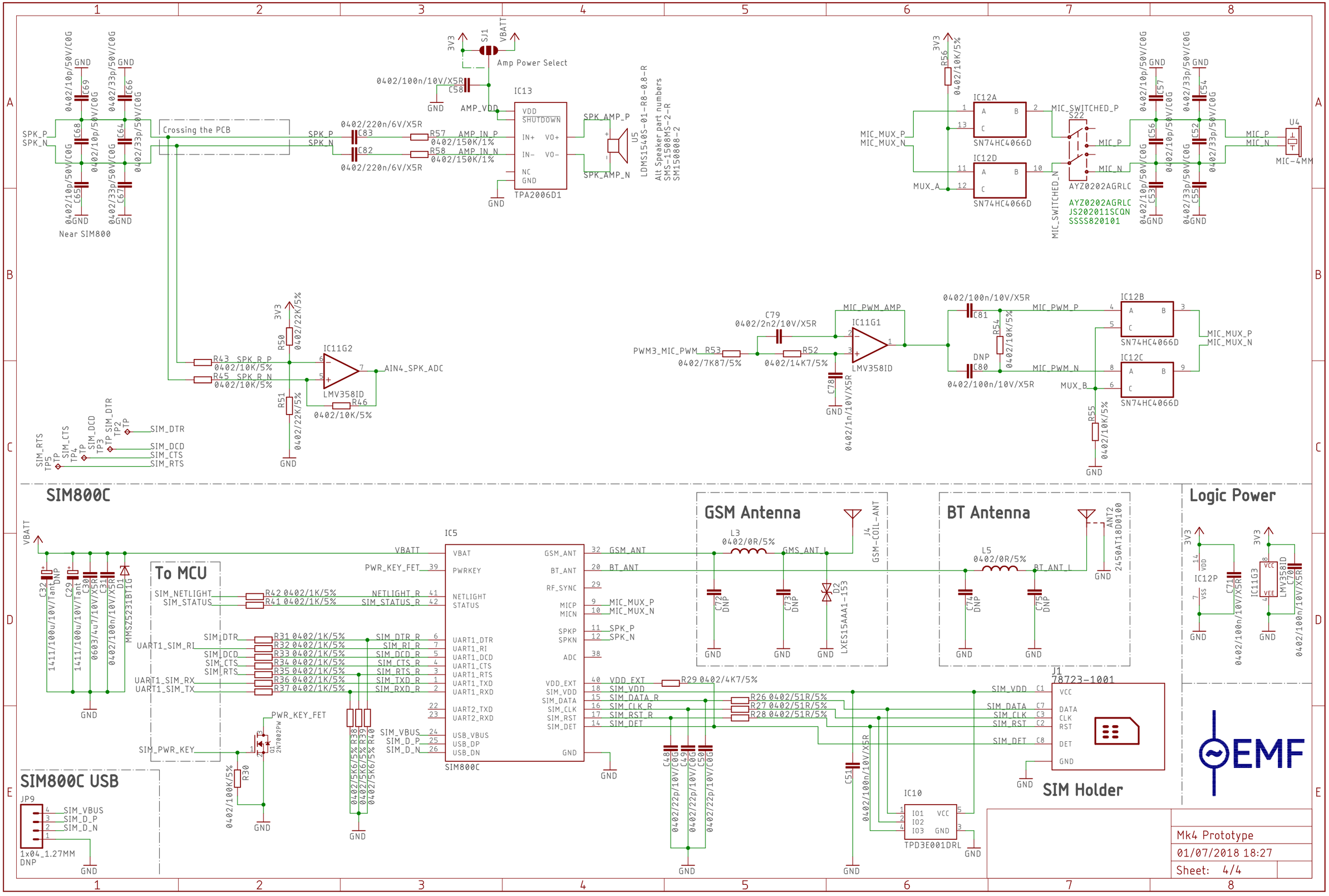
Crossing the PCB
Near SIM800
Amp Power Select
IC13
TPA2006D1
U5
LDMS1540S-01-R8-0.8-R
Alt Speaker part numbers
SMS-1508MS-2-R
SM150808-2
IC12A
IC12D
SN74HC4066D
S22
AYZ0202AGRLC
JS202011SCQN
SSSS820101
U4
MIC-4MM
IC11G2
LMV358ID
IC11G1
IC12B
IC12C
SIM800C
GSM Antenna
BT Antenna
Logic Power
To MCU
SIM800C USB
JP9
1x04_1.27MM
DNP
J1
78723-1001
SIM Holder
IC10
TPD3E001DRL
Mk4 Prototype
01/07/2018 18:27
Sheet: 4/4