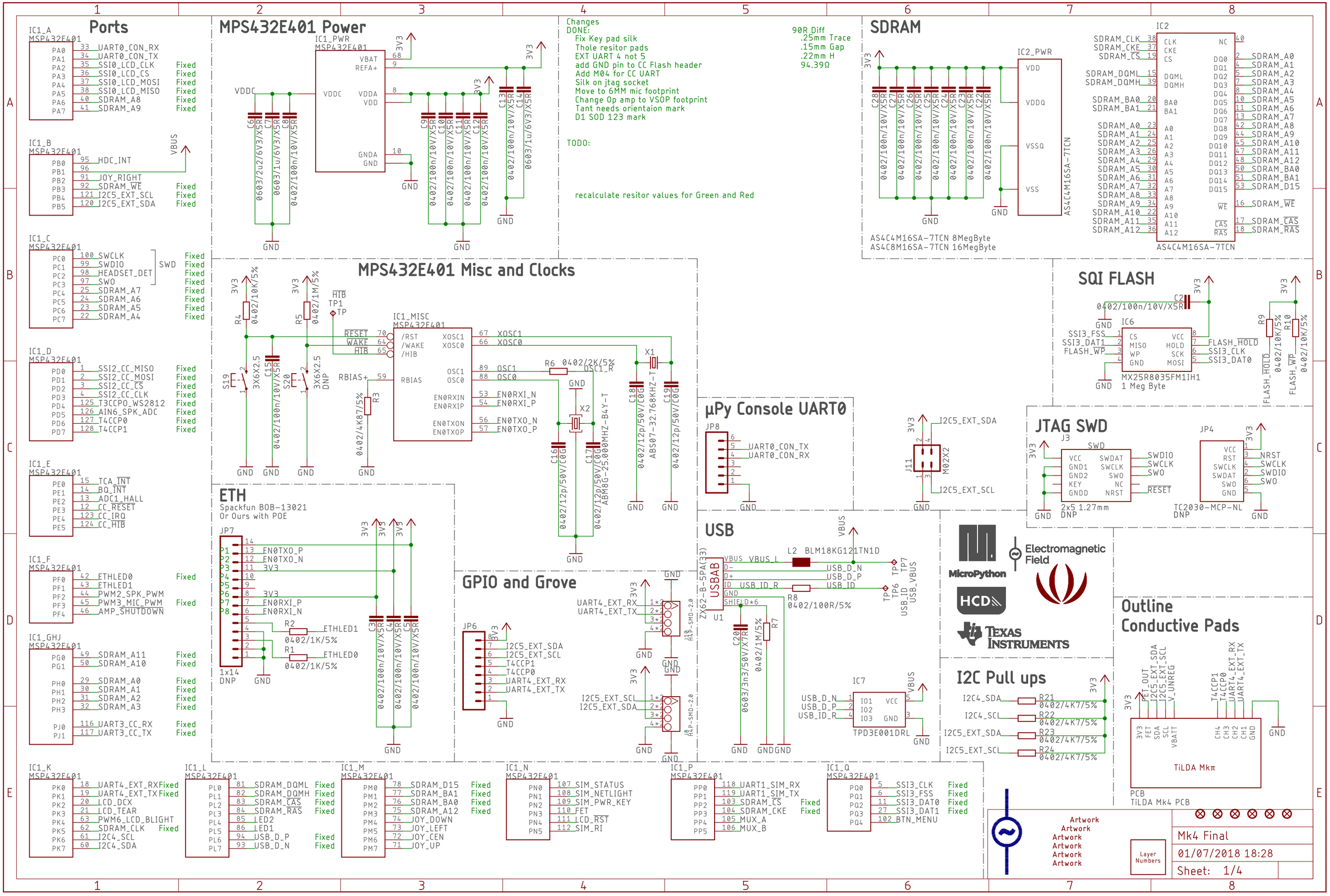
Ports
MPS432E401 Power
Changes
DONE:
Fix Key pad silk
Thole resitor pads
EXT UART 4 not 5
add GND pin to CC Flash header
Add M04 for CC UART
Silk on jtag socket
Move to 6MM mic footprint
Change Op amp to VSOP footprint
Tant needs orientaion mark
D1 SOD 123 mark
TODO:
recalculate resitor values for Green and Red
90R Diff
.25mm Trace
.15mm Gap
.22mm H
94.39Ω
SDRAM
AS4C4M16SA-7TCN 8MegByte
AS4C8M16SA-7TCN 16MegByte
MPS432E401 Misc and Clocks
SQI FLASH
MX25R8035FM1IH1
1 Meg Byte
µPy Console UART0
JTAG SWD
2x5 1.27mm
DNP
TC2030-MCP-NL
DNP
ETH
Spackfun BOB-13021
Or Ours with POE
1x14
DNP
GPIO and Grove
USB
TPD3E001DRL
I2C Pull ups
Outline
Conductive Pads
TiLDA Mkπ
PCB
TiLDA Mk4 PCB
Mk4 Final
01/07/2018 18:28
Sheet: 1/4

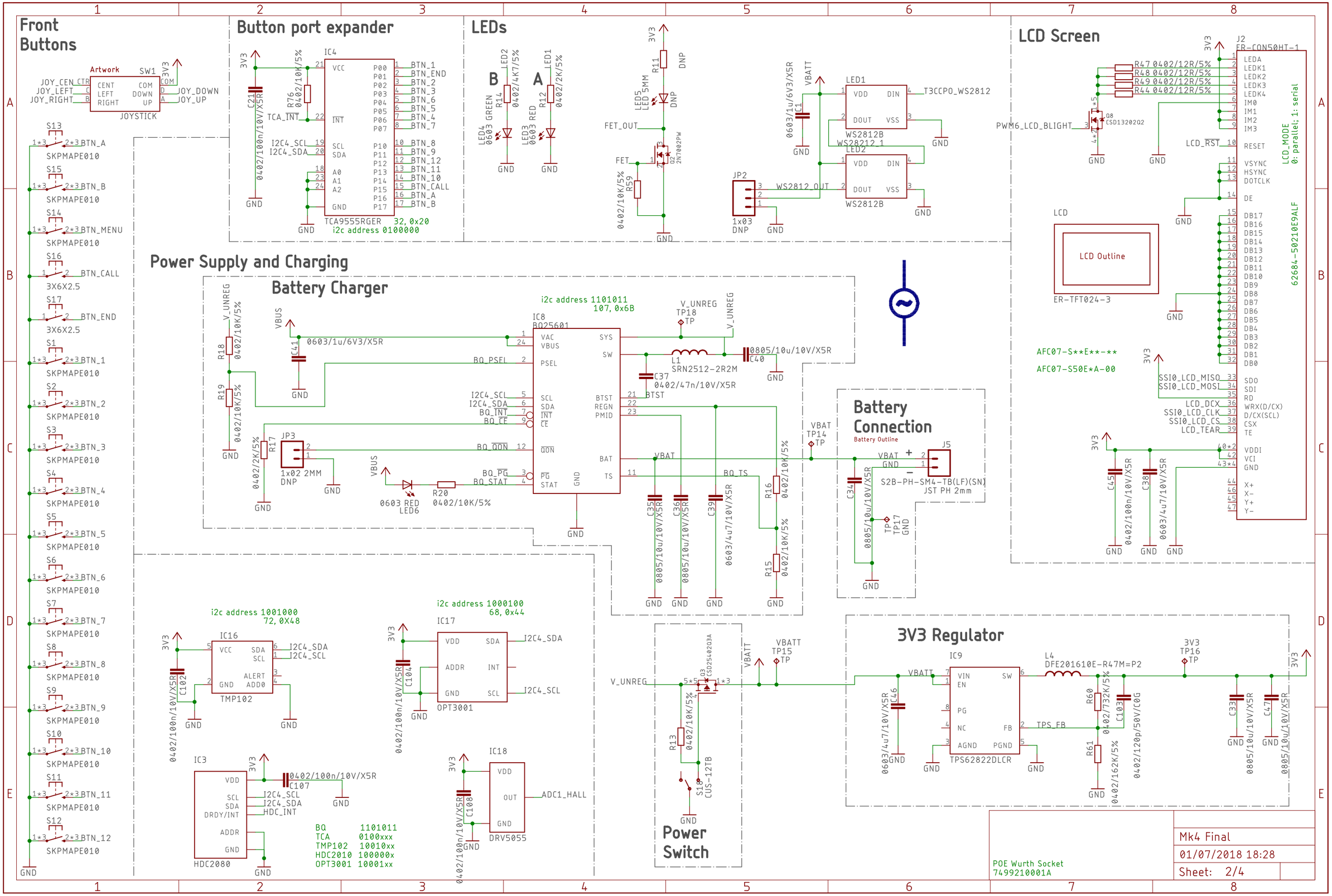
Front Buttons
Button port expander
LEDs
LCD Screen
Power Supply and Charging
Battery Charger
Battery Connection
3V3 Regulator
Power Switch
JOYSTICK
SW1
IC4
TCA9555RGER
32, 0x20
i2c address 0100000
i2c address 1101011
107, 0x6B
IC8
BQ25601
i2c address 1001000
72, 0X48
IC16
TMP102
i2c address 1000100
68, 0x44
IC17
OPT3001
IC3
HDC2080
IC18
DRV5055
IC9
TPS62822DLCR
J2
ER-CON50HT-1
LCD Outline
ER-TFT024-3
AFC07-S**E**-**
AFC07-S50E*A-00
62684-50210E9ALF
LCD_MODE
0: parallel; 1: serial
J5
S2B-PH-SM4-TB(LF)(SN)
JST PH 2mm
Battery Outline
BQ 1101011
TCA 0100xxx
TMP102 10010xx
HDC2010 100000x
OPT3001 10001xx
POE Wurth Socket
7499210001A
Mk4 Final
01/07/2018 18:28
Sheet: 2/4

WiFi

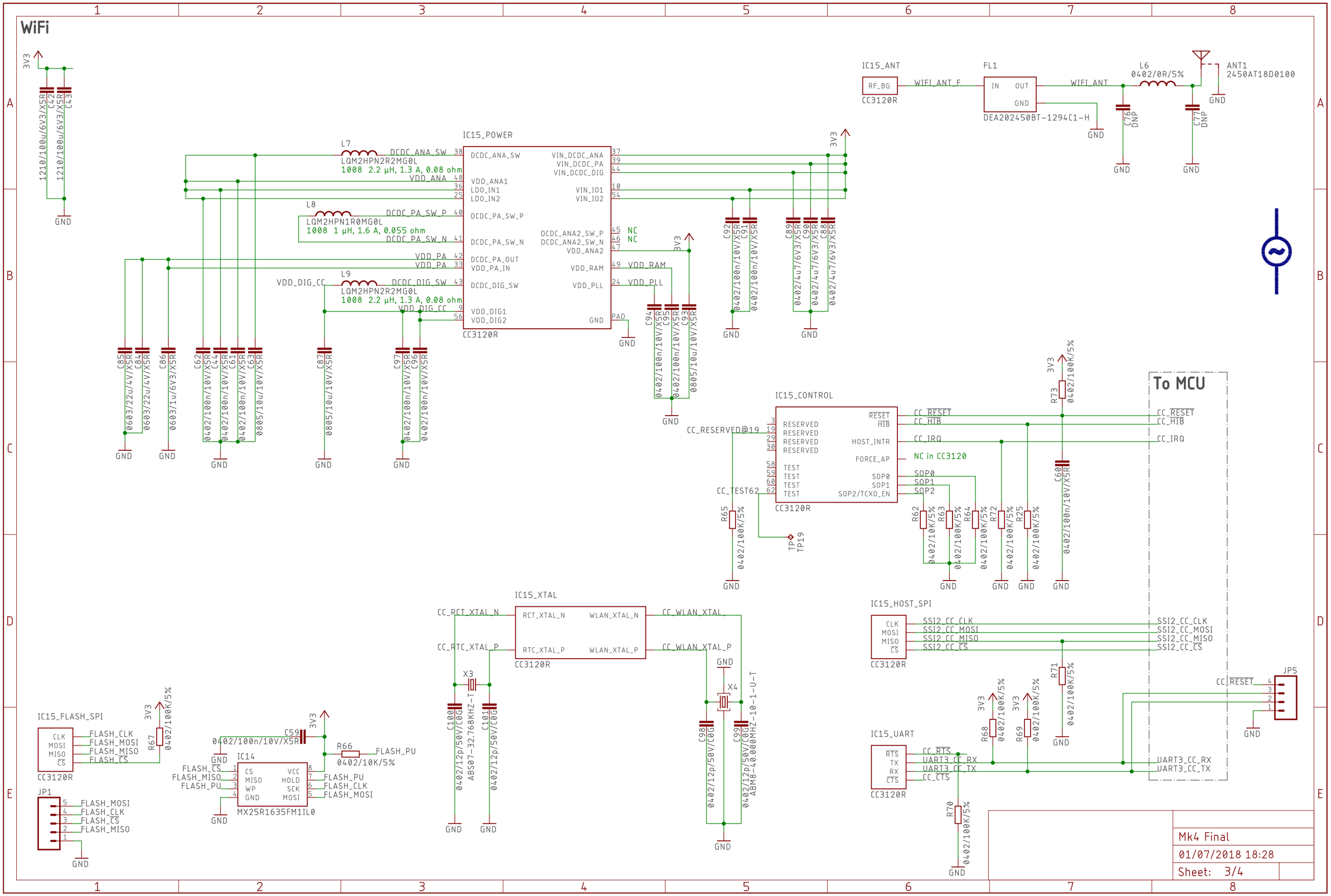
IC15_POWER
CC3120R
DCDC_ANA_SW
VIN_DCDC_ANA
VIN_DCDC_PA
VIN_DCDC_DIG
VDD_ANA1
LDO_IN1
LDO_IN2
VIN_IO1
VIN_IO2
DCDC_PA_SW_P
DCDC_PA_SW_N
DCDC_ANA2_SW_P
DCDC_ANA2_SW_N
VDD_ANA2
DCDC_PA_OUT
VDD_PA_IN
VDD_RAM
DCDC_DIG_SW
VDD_PLL
VDD_DIG1
VDD_DIG2
GND
PAD
L7
LQM2HPN2R2MG0L
1008 2.2 µH, 1.3 A, 0.08 ohm
L8
LQM2HPN1R0MG0L
1008 1 µH, 1.6 A, 0.055 ohm
L9
VDD_ANA
VDD_PA
VDD_DIG_CC
VDD_RAM
VDD_PLL
NC
IC15_ANT
RF_BG
WIFI_ANT_F
FL1
IN
OUT
DEA202450BT-1294C1-H
WIFI_ANT
L6
0402/0R/5%
ANT1
2450AT18D0100
C76
DNP
C77
DNP
IC15_CONTROL
RESERVED
TEST
RESET
HIB
HOST_INTR
FORCE_AP
SOP0
SOP1
SOP2/TCXO_EN
CC_RESERVED@19
CC_TEST62
NC in CC3120
CC_RESET
CC_HIB
CC_IRQ
SOP2
R73
0402/100K/5%
R65
R62
R63
R64
R72
R25
C60
TP19
To MCU
IC15_HOST_SPI
CLK
MOSI
MISO
CS
SSI2_CC_CLK
SSI2_CC_MOSI
SSI2_CC_MISO
SSI2_CC_CS
IC15_XTAL
RCT_XTAL_N
RCT_XTAL_P
WLAN_XTAL_N
WLAN_XTAL_P
CC_RCT_XTAL_N
CC_RCT_XTAL_P
CC_WLAN_XTAL
CC_WLAN_XTAL_P
X3
X4
ABS07-32.768KHZ-T
ABM8-40.000MHZ-10-1-U-T
C100
C101
C98
C99
IC15_FLASH_SPI
FLASH_CLK
FLASH_MOSI
FLASH_MISO
FLASH_CS
R67
IC14
MX25R1635FM1IL0
C59
R66
FLASH_PU
JP1
IC15_UART
RTS
TX
RX
CTS
UART3_CC_RX
UART3_CC_TX
R68
R69
R71
R70
JP5
Mk4 Final
01/07/2018 18:28
Sheet: 3/4

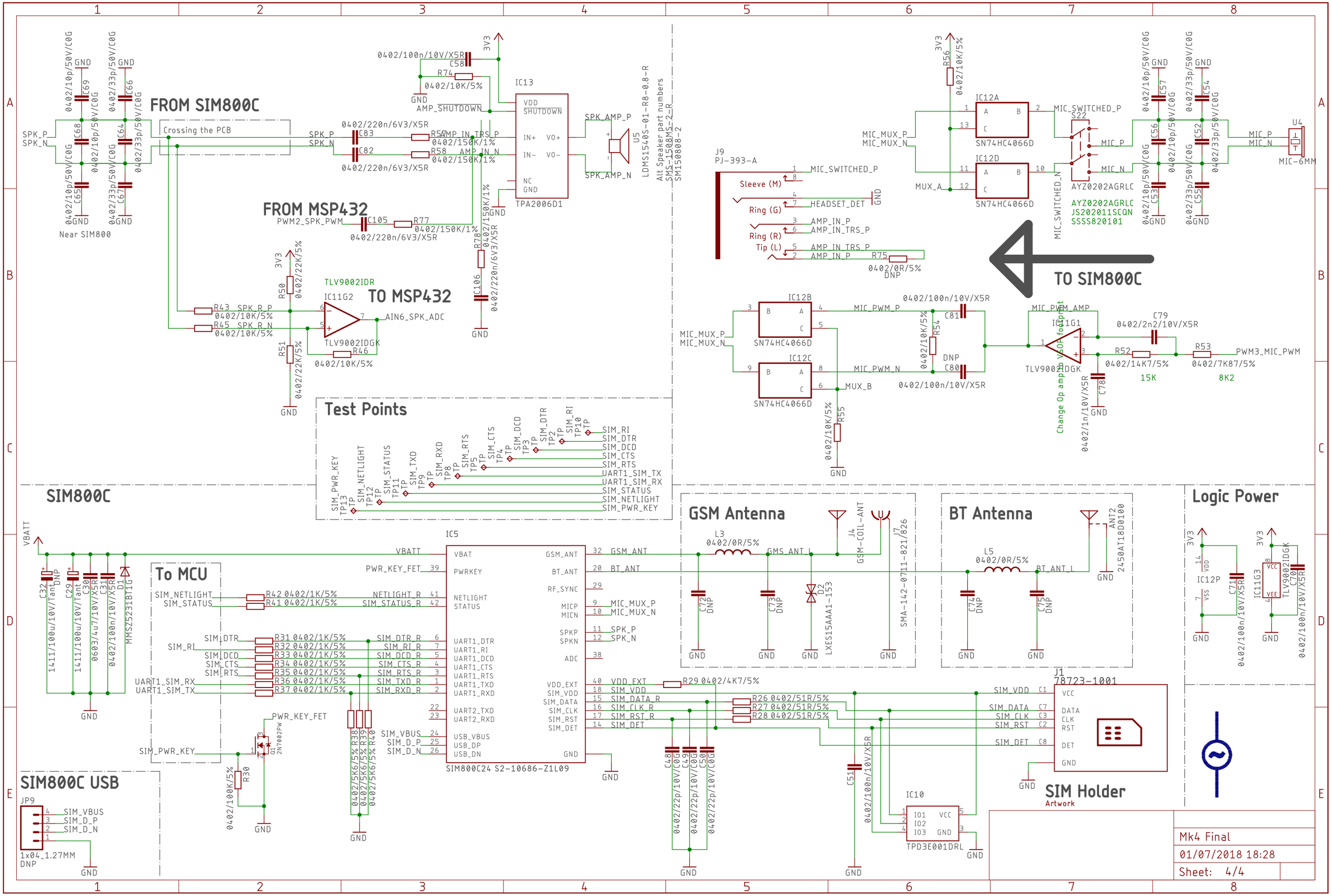
FROM SIM800C
Crossing the PCB
Near SIM800
FROM MSP432
PWM2_SPK_PWM
TO MSP432
TLV9002IDR
TLV9002IDGK
IC11G2
IC13
TPA2006D1
AMP_SHUTDOWN
AMP_IN_TRS_P
AMP_IN_N
SPK_AMP_P
SPK_AMP_N
U5
LDMS1540S-01-R8-0.8-R
Alt Speaker part numbers
SMS-1508MS-2-R
SM150808-2
J9
PJ-393-A
Sleeve (M)
Ring (G)
Ring (R)
Tip (L)
MIC_SWITCHED_P
HEADSET_DET
AMP_IN_P
AMP_IN_TRS_P
IC12A
IC12B
IC12C
IC12D
SN74HC4066D
MIC_MUX_P
MIC_MUX_N
MUX_A
MUX_B
MIC_PWM_P
MIC_PWM_N
S22
AYZ0202AGRLC
AYZ0202AGRLC
JS202011SCQN
SSSS820101
U4
MIC-6MM
MIC_P
MIC_N
TO SIM800C
MIC_PWM_AMP
IC11G1
Change Op amp to VSOP footprint
PWM3_MIC_PWM
15K
8K2
Test Points
SIM_PWR_KEY
SIM_NETLIGHT
SIM_STATUS
SIM_TXD
SIM_RXD
SIM_RTS
SIM_CTS
SIM_DCD
SIM_DTR
SIM_RI
UART1_SIM_TX
UART1_SIM_RX
SIM800C
IC5
SIM800C24 S2-10686-Z1L09
VBATT
PWR_KEY_FET
To MCU
NETLIGHT_R
SIM_STATUS_R
SIM_DTR_R
SIM_RI_R
SIM_DCD_R
SIM_CTS_R
SIM_RTS_R
SIM_TXD_R
SIM_RXD_R
SIM_VBUS
SIM_D_P
SIM_D_N
GSM_ANT
BT_ANT
MIC_MUX_P
MIC_MUX_N
SPK_P
SPK_N
VDD_EXT
SIM_VDD
SIM_DATA_R
SIM_CLK_R
SIM_RST_R
SIM_DET
GSM Antenna
L3
GMS_ANT_L
GSM-COIL-ANT
SMA-142-0711-821/826
BT Antenna
L5
BT_ANT_L
ANT2
2450AT18D0100
Logic Power
IC12P
IC11G3
SIM Holder
Artwork
J1
78723-1001
VCC
DATA
CLK
RST
DET
GND
IC10
TPD3E001DRL
SIM800C USB
JP9
1x04_1.27MM
DNP
Mk4 Final
01/07/2018 18:28
Sheet: 4/4