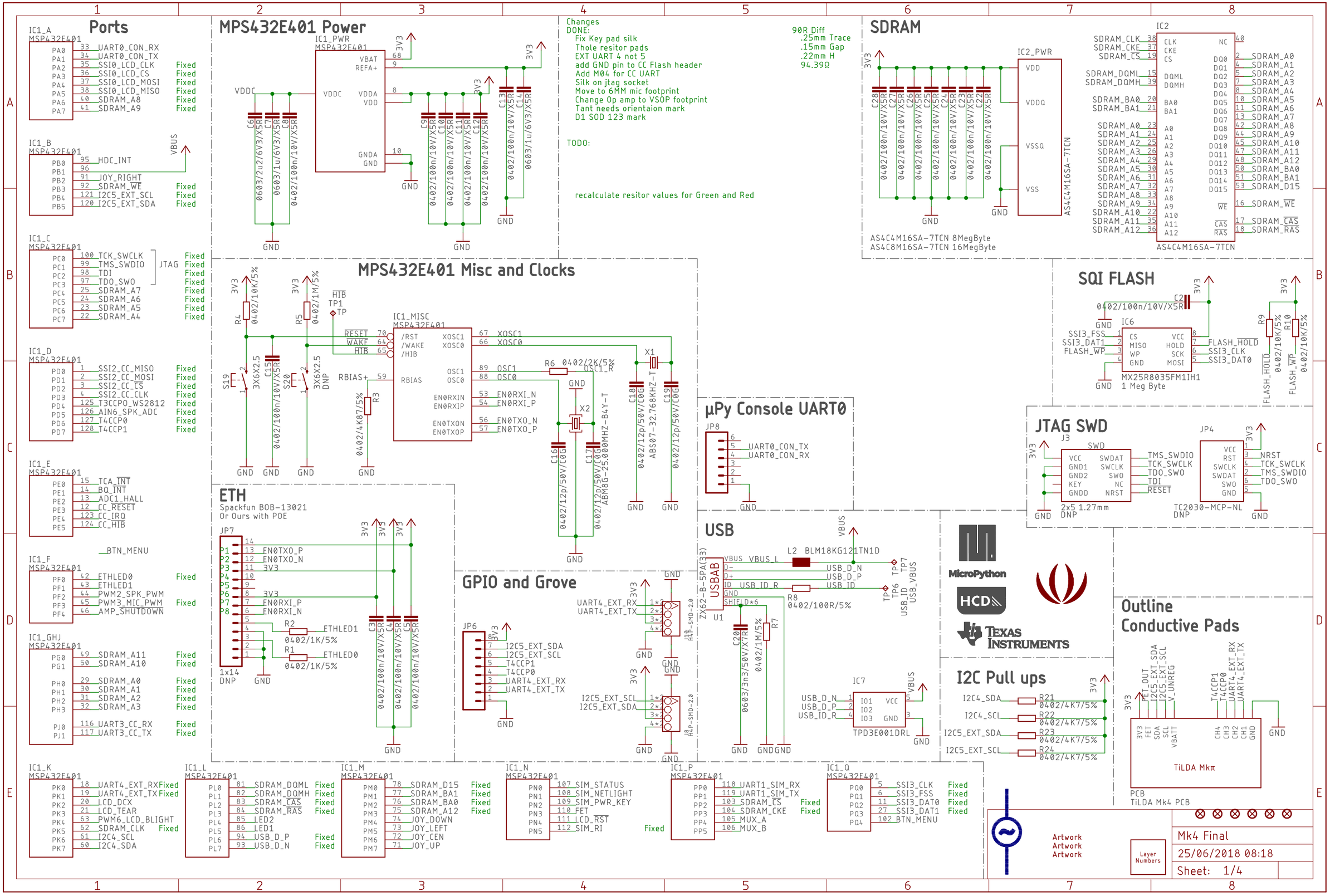
Ports
MPS432E401 Power
Changes
DONE:
Fix Key pad silk
Thole resitor pads
EXT UART 4 not 5
add GND pin to CC Flash header
Add M04 for CC UART
Silk on jtag socket
Move to 6MM mic footprint
Change Op amp to VSOP footprint
Tant needs orientaion mark
D1 SOD 123 mark
TODO:
recalculate resitor values for Green and Red
90R Diff
.25mm Trace
.15mm Gap
.22mm H
94.39Ω
SDRAM
AS4C4M16SA-7TCN 8MegByte
AS4C8M16SA-7TCN 16MegByte
MPS432E401 Misc and Clocks
SQI FLASH
MX25R8035FM1IH1
1 Meg Byte
JTAG SWD
2x5 1.27mm
DNP
TC2030-MCP-NL
DNP
µPy Console UART0
ETH
Spackfun BOB-13021
Or Ours with POE
1x14
DNP
GPIO and Grove
USB
TPD3E001DRL
I2C Pull ups
Outline
Conductive Pads
TiLDA Mkπ
PCB
TiLDA Mk4 PCB
Artwork
Artwork
Artwork
Layer Numbers
Mk4 Final
25/06/2018 08:18
Sheet: 1/4

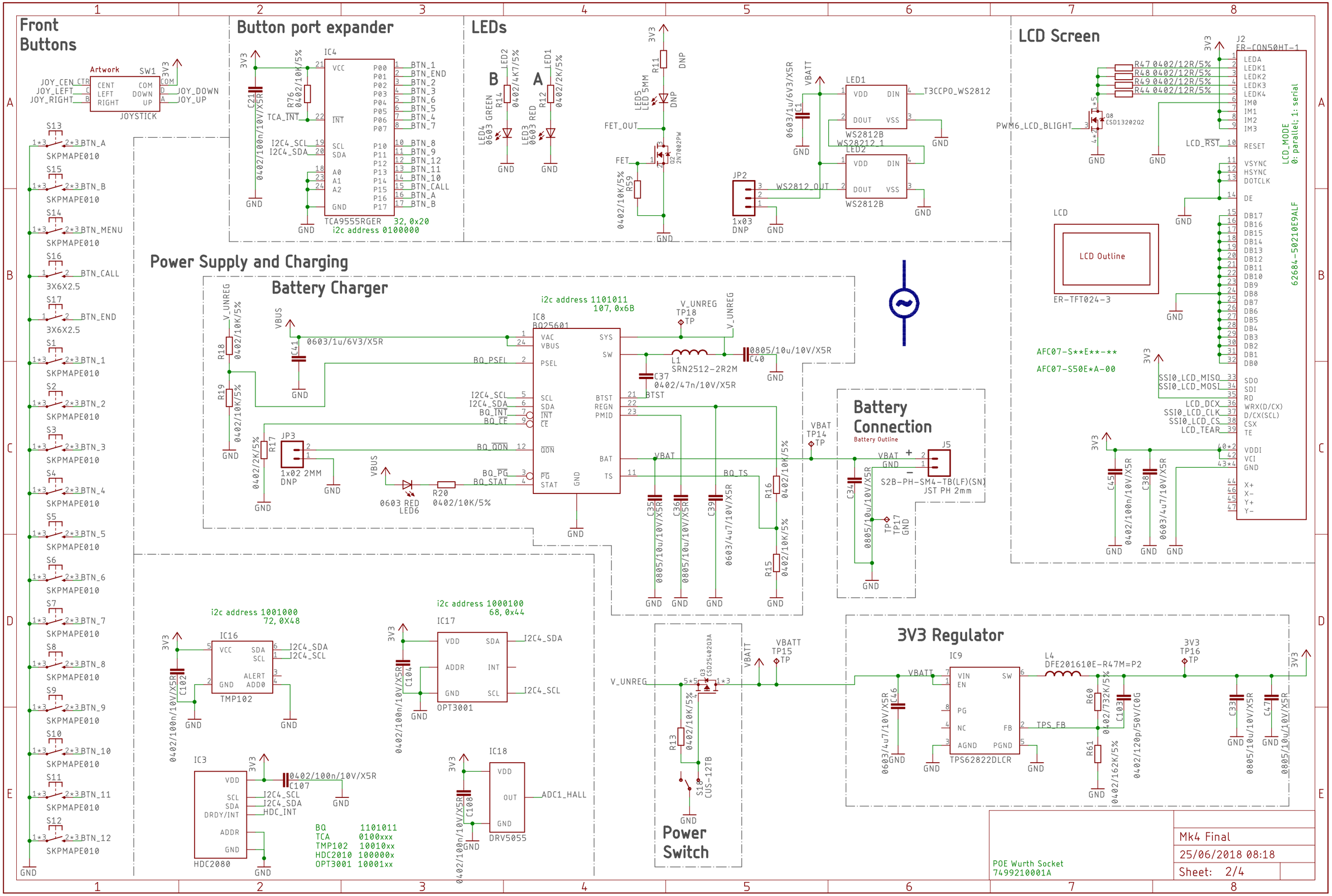
Front Buttons
Button port expander
LEDs
LCD Screen
Power Supply and Charging
Battery Charger
Battery Connection
3V3 Regulator
Power Switch
JOYSTICK
SW1
IC4
TCA9555RGER
32, 0x20
i2c address 0100000
i2c address 1101011
107, 0x6B
IC8
BQ25601
i2c address 1001000
72, 0X48
IC16
TMP102
i2c address 1000100
68, 0x44
IC17
OPT3001
IC3
HDC2080
IC18
DRV5055
IC9
TPS62822DLCR
J2
ER-CON50HT-1
LCD Outline
ER-TFT024-3
AFC07-S**E**-**
AFC07-S50E*A-00
62684-50210E9ALF
LCD_MODE
0: parallel; 1: serial
J5
S2B-PH-SM4-TB(LF)(SN)
JST PH 2mm
Battery Outline
BQ 1101011
TCA 0100xxx
TMP102 10010xx
HDC2010 100000x
OPT3001 10001xx
POE Wurth Socket
7499210001A
Mk4 Final
25/06/2018 08:18
Sheet: 2/4

WiFi

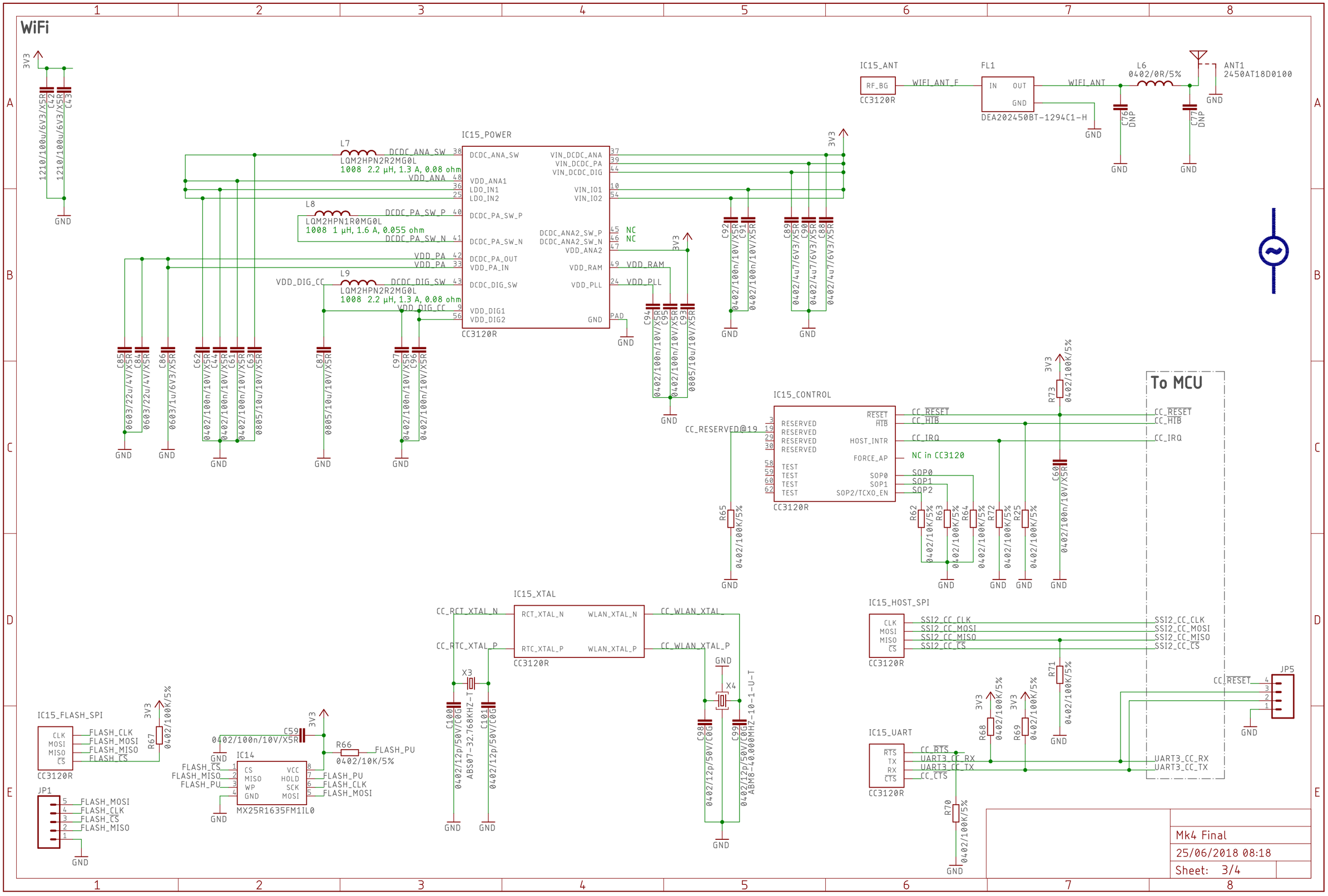
IC15_POWER
CC3120R
DCDC_ANA_SW
VDD_ANA1
LDO_IN1
LDO_IN2
DCDC_PA_SW_P
DCDC_PA_SW_N
DCDC_PA_OUT
VDD_PA_IN
DCDC_DIG_SW
VDD_DIG1
VDD_DIG2
VIN_DCDC_ANA
VIN_DCDC_PA
VIN_DCDC_DIG
VIN_IO1
VIN_IO2
DCDC_ANA2_SW_P
DCDC_ANA2_SW_N
VDD_ANA2
VDD_RAM
VDD_PLL
GND
PAD
L7
LQM2HPN2R2MG0L
1008 2.2 µH, 1.3 A, 0.08 ohm
L8
LQM2HPN1R0MG0L
1008 1 µH, 1.6 A, 0.055 ohm
L9
VDD_ANA
VDD_PA
VDD_DIG_CC
VDD_RAM
VDD_PLL
NC
IC15_ANT
RF_BG
CC3120R
WIFI_ANT_F
FL1
IN
OUT
GND
DEA202450BT-1294C1-H
WIFI_ANT
L6
0402/0R/5%
ANT1
2450AT18D0100
C76
DNP
C77
DNP
IC15_CONTROL
RESERVED
TEST
RESET
HIB
HOST_INTR
FORCE_AP
SOP0
SOP1
SOP2/TCXO_EN
CC_RESERVED@19
NC in CC3120
CC_RESET
CC_HIB
CC_IRQ
SOP0
SOP1
SOP2
R73
0402/100K/5%
R65
R62
0402/10K/5%
R63
R64
R72
R25
C60
0402/100n/10V/X5R
To MCU
IC15_HOST_SPI
CLK
MOSI
MISO
CS
SSI2_CC_CLK
SSI2_CC_MOSI
SSI2_CC_MISO
SSI2_CC_CS
IC15_XTAL
RCT_XTAL_N
RTC_XTAL_P
WLAN_XTAL_N
WLAN_XTAL_P
CC_RCT_XTAL_N
CC_RTC_XTAL_P
CC_WLAN_XTAL
CC_WLAN_XTAL_P
X3
ABS07-32.768KHZ-T
X4
ABM8-40.000MHZ-10-1-U-T
C100
C101
C98
C99
IC15_FLASH_SPI
FLASH_CLK
FLASH_MOSI
FLASH_MISO
FLASH_CS
R67
IC14
MX25R1635FM1IL0
C59
R66
FLASH_PU
JP1
IC15_UART
RTS
TX
RX
CTS
UART3_CC_RX
UART3_CC_TX
R68
R69
R71
R70
JP5
Mk4 Final
25/06/2018 08:18
Sheet: 3/4

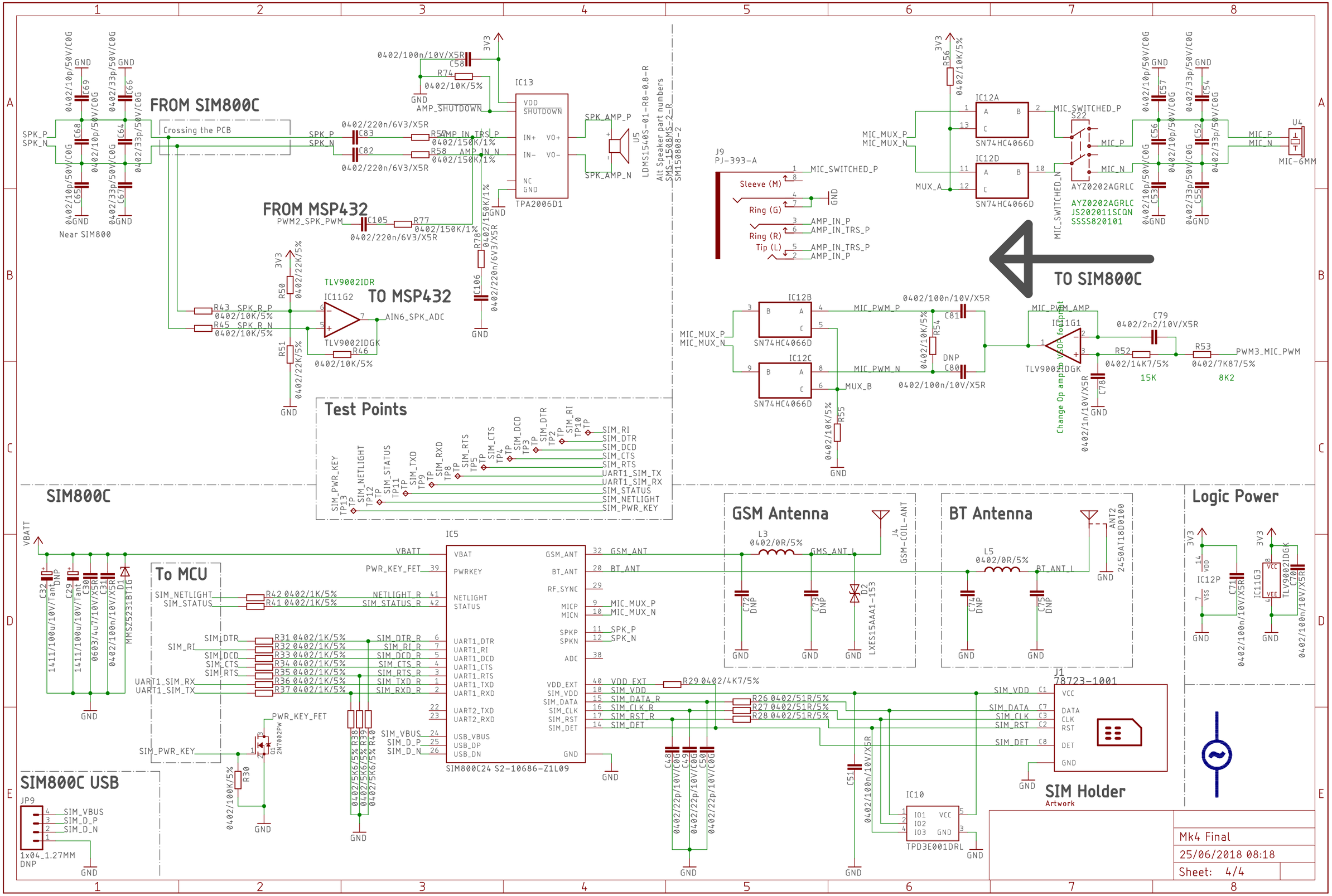
FROM SIM800C
Crossing the PCB
Near SIM800
FROM MSP432
TO MSP432
TO SIM800C
IC13
TPA2006D1
IC12A
IC12B
IC12C
IC12D
SN74HC4066D
IC11G1
IC11G2
TLV9002IDR
TLV9002IDGK
J9
PJ-393-A
U4
MIC-6MM
U5
LDMS1540S-01-R8-0.8-R
Alt Speaker part numbers
SMS-1508MS-2-R
SM150808-2
Test Points
SIM800C
IC5
SIM800C24 S2-10686-Z1L09
To MCU
GSM Antenna
BT Antenna
Logic Power
J1
78723-1001
SIM Holder
Artwork
SIM800C USB
JP9
1x04_1.27MM
DNP
IC10
TPD3E001DRL
Mk4 Final
25/06/2018 08:18
Sheet: 4/4