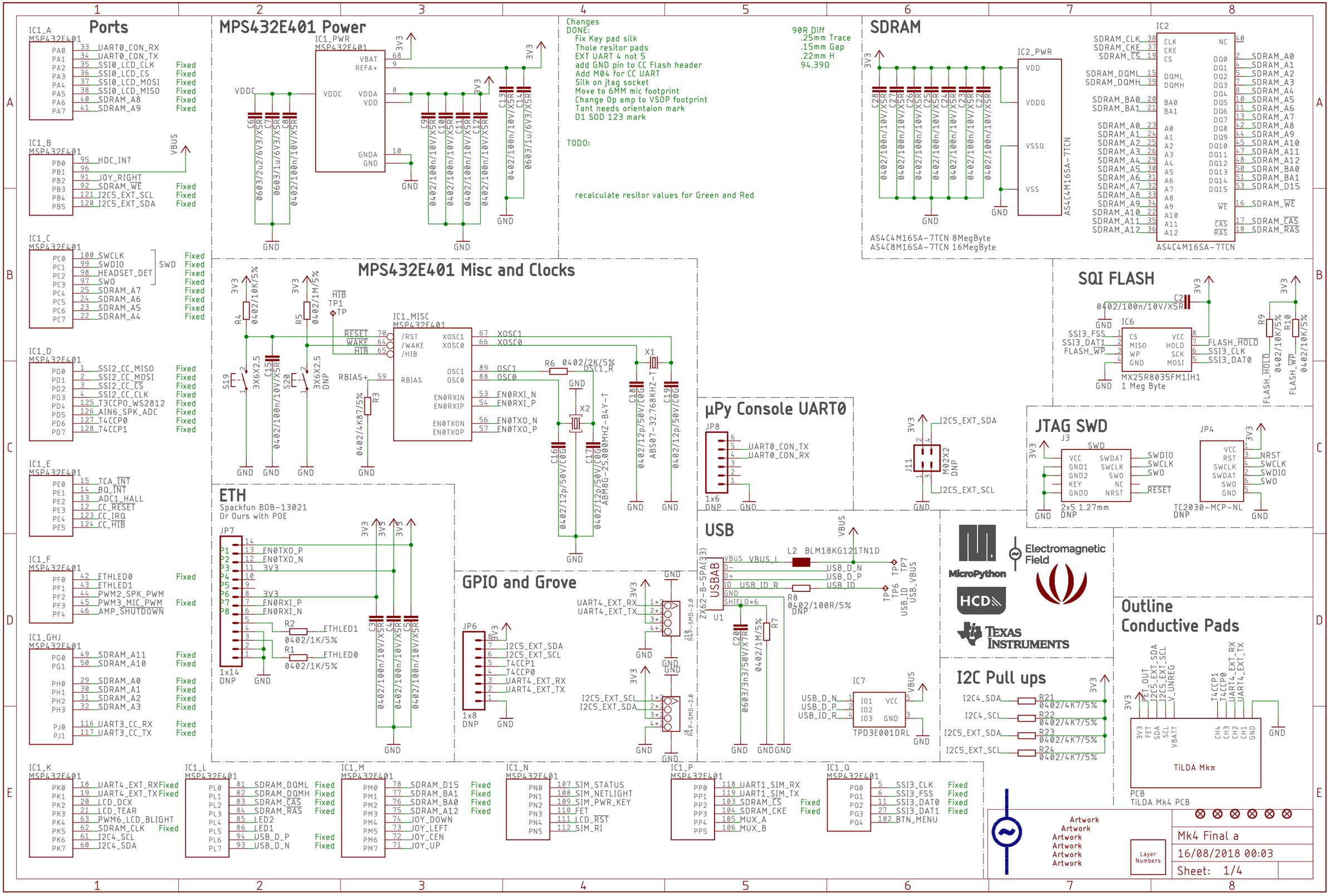
Ports
MPS432E401 Power
Changes
DONE:
Fix Key pad silk
Thole resitor pads
EXT UART 4 not 5
add GND pin to CC Flash header
Add M04 for CC UART
Silk on jtag socket
Move to 6MM mic footprint
Change Op amp to VSOP footprint
Tant needs orientaion mark
D1 SOD 123 mark
TODO:
recalculate resitor values for Green and Red
90R Diff
.25mm Trace
.15mm Gap
.22mm H
94.39Ω
SDRAM
AS4C4M16SA-7TCN 8MegByte
AS4C8M16SA-7TCN 16MegByte
MPS432E401 Misc and Clocks
SQI FLASH
MX25R8035FM1IH1
1 Meg Byte
µPy Console UART0
JTAG SWD
ETH
Spackfun BOB-13021
Or Ours with POE
USB
GPIO and Grove
I2C Pull ups
Outline
Conductive Pads
TiLDA Mkπ
PCB
TiLDA Mk4 PCB
Mk4 Final a
16/08/2018 00:03
Sheet: 1/4

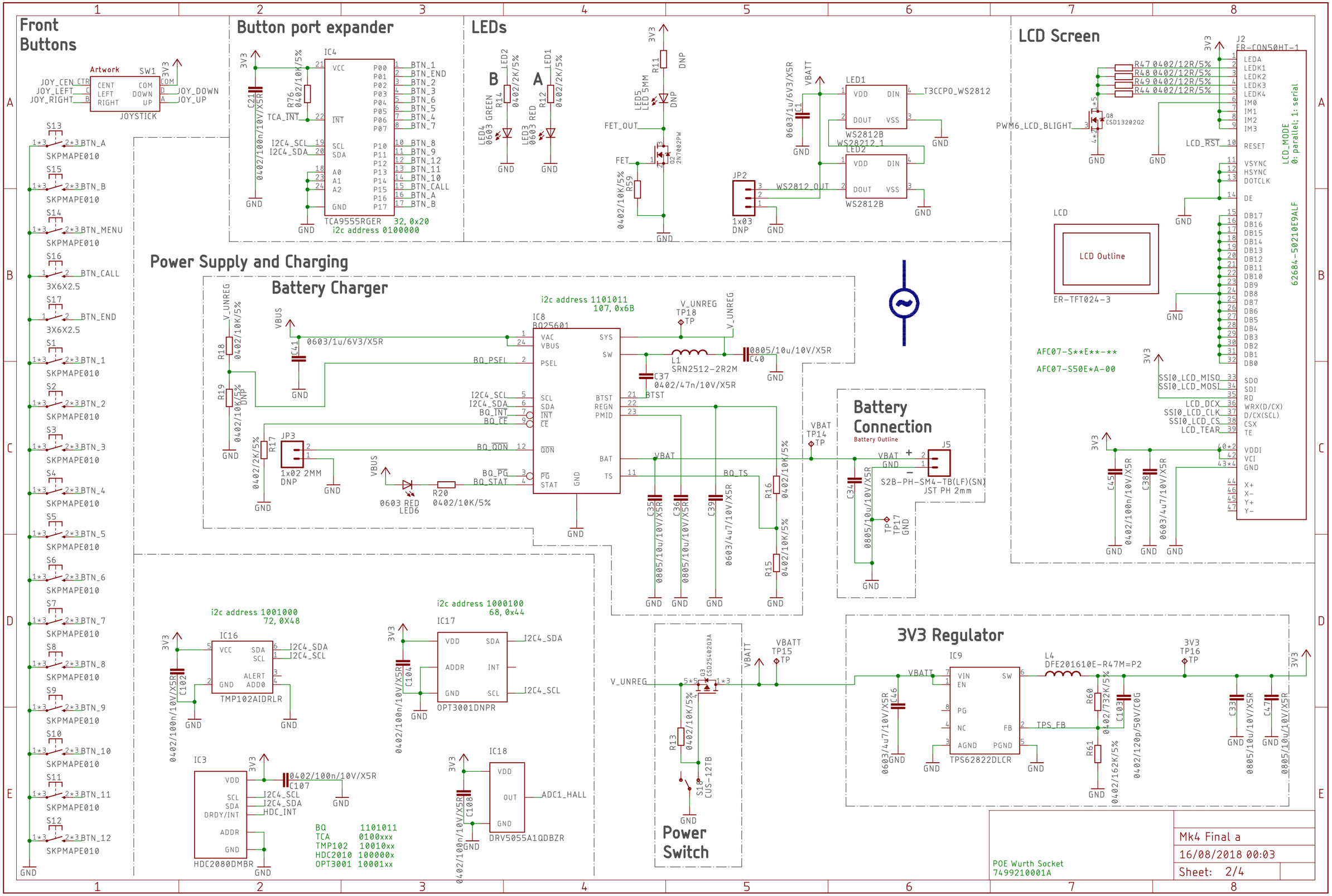
Front Buttons
Artwork
SW1
JOYSTICK
JOY_CEN
JOY_LEFT
JOY_RIGHT
JOY_DOWN
JOY_UP
S13 SKPMAPE010 BTN_A
S15 SKPMAPE010 BTN_B
S14 SKPMAPE010 BTN_MENU
S16 3X6X2.5 BTN_CALL
S17 3X6X2.5 BTN_END
S1 SKPMAPE010 BTN_1
S2 SKPMAPE010 BTN_2
S3 SKPMAPE010 BTN_3
S4 SKPMAPE010 BTN_4
S5 SKPMAPE010 BTN_5
S6 SKPMAPE010 BTN_6
S7 SKPMAPE010 BTN_7
S8 SKPMAPE010 BTN_8
S9 SKPMAPE010 BTN_9
S10 SKPMAPE010 BTN_10
S11 SKPMAPE010 BTN_11
S12 SKPMAPE010 BTN_12
Button port expander
IC4
TCA9555RGER
32, 0x20
i2c address 0100000
BTN_1 BTN_END BTN_2 BTN_3 BTN_6 BTN_5 BTN_4 BTN_7 BTN_8 BTN_9 BTN_12 BTN_11 BTN_10 BTN_CALL BTN_A BTN_B
LEDs
LED4 GREEN
LED3 RED
LED5 LED 5MM
FET_OUT
FET
JP2
1x03 DNP
LED1 WS2812B
LED2 WS2812B
WS2812_1
WS2812_OUT
T3CCP0_WS2812
LCD Screen
J2 ER-CON50HT-1
LCD_MODE 0: parallel; 1: serial
62684-50210E9ALF
PWM6_LCD_BLIGHT
LCD_RST
LCD
LCD Outline
ER-TFT024-3
AFC07-S**E**-**
AFC07-S50E*A-00
SSI0_LCD_MISO
SSI0_LCD_MOSI
LCD_DCX
SSI0_LCD_CLK
SSI0_LCD_CS
LCD_TEAR
Power Supply and Charging
Battery Charger
IC8 BQ25601
i2c address 1101011
107, 0x6B
BQ_PSEL
BQ_INT
BQ_CE
BQ_QON
BQ_PG
BQ_STAT
BQ_TS
JP3 1x02 2MM DNP
L1 SRN2512-2R2M
C37 0402/47n/10V/X5R
Battery Connection
Battery Outline
J5 S2B-PH-SM4-TB(LF)(SN) JST PH 2mm
IC16 TMP102AIDRLR
i2c address 1001000
72, 0X48
IC17 OPT3001DNPR
i2c address 1000100
68, 0x44
IC3 HDC2080DMBR
IC18 DRV5055A1QDBZR
ADC1_HALL
BQ 1101011
TCA 0100xxx
TMP102 10010xx
HDC2010 100000x
OPT3001 10001xx
Power Switch
S18 CUS-12TB
3V3 Regulator
IC9 TPS62822DLCR
L4 DFE201610E-R47M=P2
TPS_FB
POE Wurth Socket
7499210001A
Mk4 Final a
16/08/2018 00:03
Sheet: 2/4

WiFi

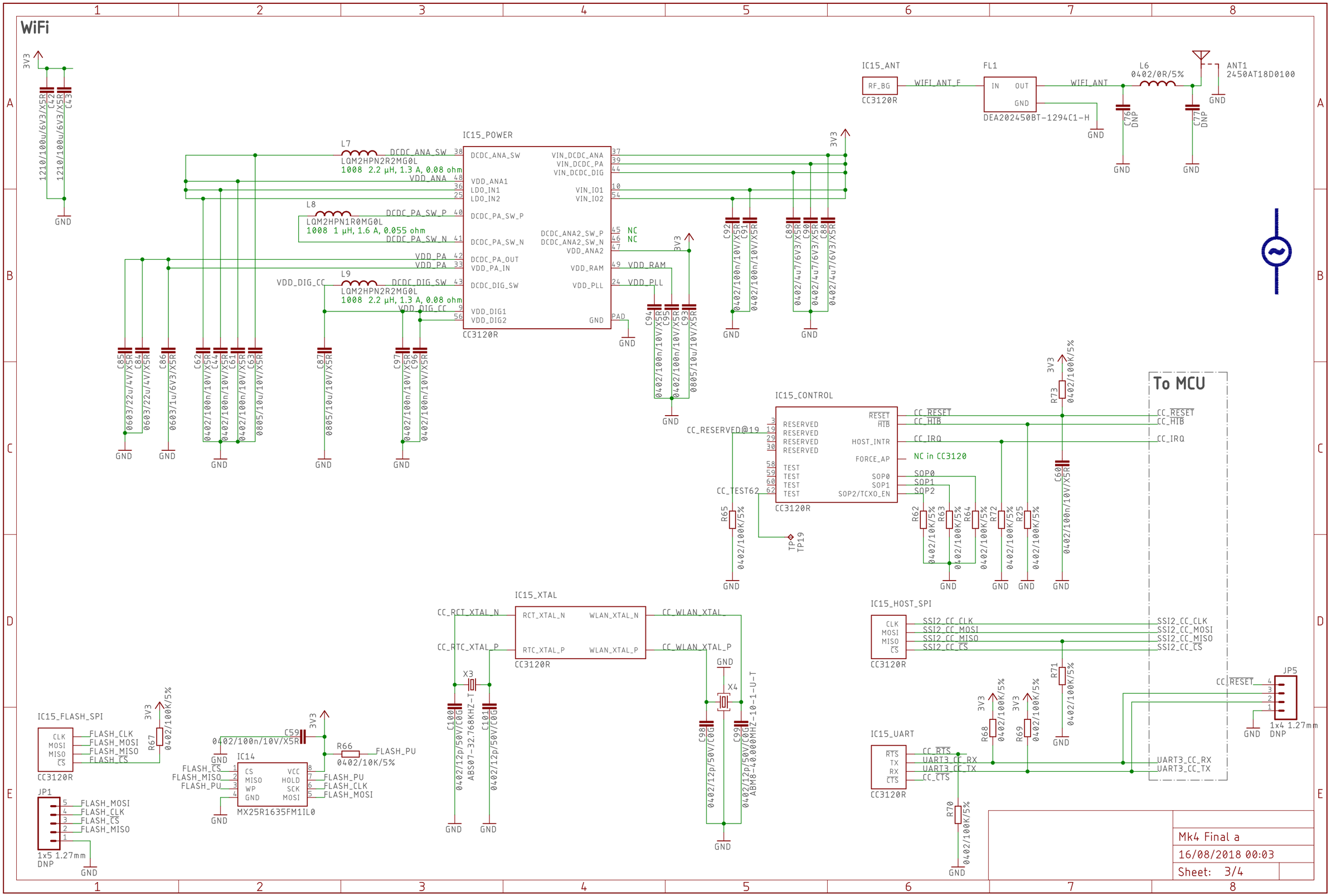
IC15_POWER
CC3120R
DCDC_ANA_SW
VDD_ANA1
LDO_IN1
LDO_IN2
DCDC_PA_SW_P
DCDC_PA_SW_N
DCDC_PA_OUT
VDD_PA_IN
DCDC_DIG_SW
VDD_DIG1
VDD_DIG2
VIN_DCDC_ANA
VIN_DCDC_PA
VIN_DCDC_DIG
VIN_IO1
VIN_IO2
DCDC_ANA2_SW_P
DCDC_ANA2_SW_N
VDD_ANA2
VDD_RAM
VDD_PLL
GND
PAD
L7
LQM2HPN2R2MG0L
1008 2.2 µH, 1.3 A, 0.08 ohm
L8
LQM2HPN1R0MG0L
1008 1 µH, 1.6 A, 0.055 ohm
L9
VDD_ANA
VDD_PA
VDD_DIG_CC
VDD_RAM
VDD_PLL
NC
IC15_ANT
RF_BG
CC3120R
WIFI_ANT_F
FL1
IN
OUT
GND
DEA202450BT-1294C1-H
WIFI_ANT
L6
0402/0R/5%
ANT1
2450AT18D0100
C76
DNP
C77
DNP
IC15_CONTROL
RESERVED
TEST
RESET
HIB
HOST_INTR
FORCE_AP
SOP0
SOP1
SOP2/TCXO_EN
CC_RESERVED@19
CC_TEST62
TP19
NC in CC3120
CC_RESET
CC_HIB
CC_IRQ
SOP0
SOP1
SOP2
R73
0402/100K/5%
C60
0402/100n/10V/X5R
To MCU
IC15_HOST_SPI
CLK
MOSI
MISO
CS
SSI2_CC_CLK
SSI2_CC_MOSI
SSI2_CC_MISO
SSI2_CC_CS
IC15_XTAL
RCT_XTAL_N
RTC_XTAL_P
WLAN_XTAL_N
WLAN_XTAL_P
CC_RCT_XTAL_N
CC_RTC_XTAL_P
CC_WLAN_XTAL
CC_WLAN_XTAL_P
X3
ABS07-32.768KHZ-T
X4
ABM8-40.000MHZ-10-1-U-T
IC15_FLASH_SPI
FLASH_CLK
FLASH_MOSI
FLASH_MISO
FLASH_CS
R67
0402/100K/5%
IC14
MX25R1635FM1IL0
C59
0402/100n/10V/X5R
R66
0402/10K/5%
FLASH_PU
JP1
1x5 1.27mm
DNP
IC15_UART
RTS
TX
RX
CTS
UART3_CC_RX
UART3_CC_TX
R68
R69
R71
R70
JP5
1x4 1.27mm
DNP
Mk4 Final a
16/08/2018 00:03
Sheet: 3/4

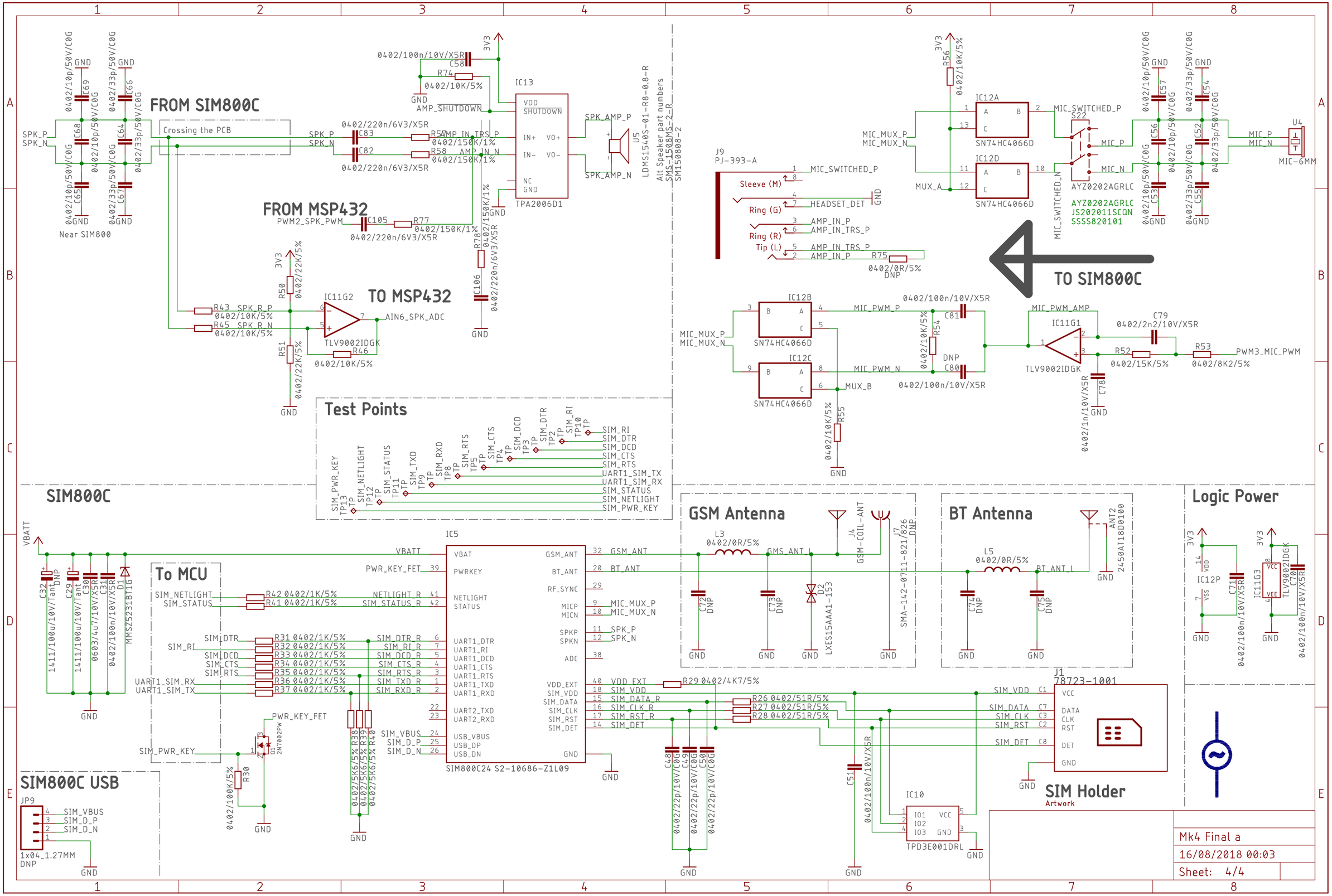
FROM SIM800C
Crossing the PCB
Near SIM800
FROM MSP432
TO MSP432
TO SIM800C
IC13
TPA2006D1
IC11G2
TLV9002IDGK
IC12A
IC12B
IC12C
IC12D
SN74HC4066D
IC11G1
J9
PJ-393-A
S22
AYZ0202AGRLC
U4
MIC-6MM
U5
LDMS1540S-01-R8-0.8-R
Alt Speaker part numbers
Test Points
SIM800C
IC5
SIM800C24 S2-10686-Z1L09
To MCU
SIM800C USB
JP9
1x04_1.27MM
DNP
GSM Antenna
BT Antenna
Logic Power
IC12P
IC11G3
J1
78723-1001
SIM Holder
Artwork
IC10
TPD3E001DRL
Mk4 Final a
16/08/2018 00:03
Sheet: 4/4