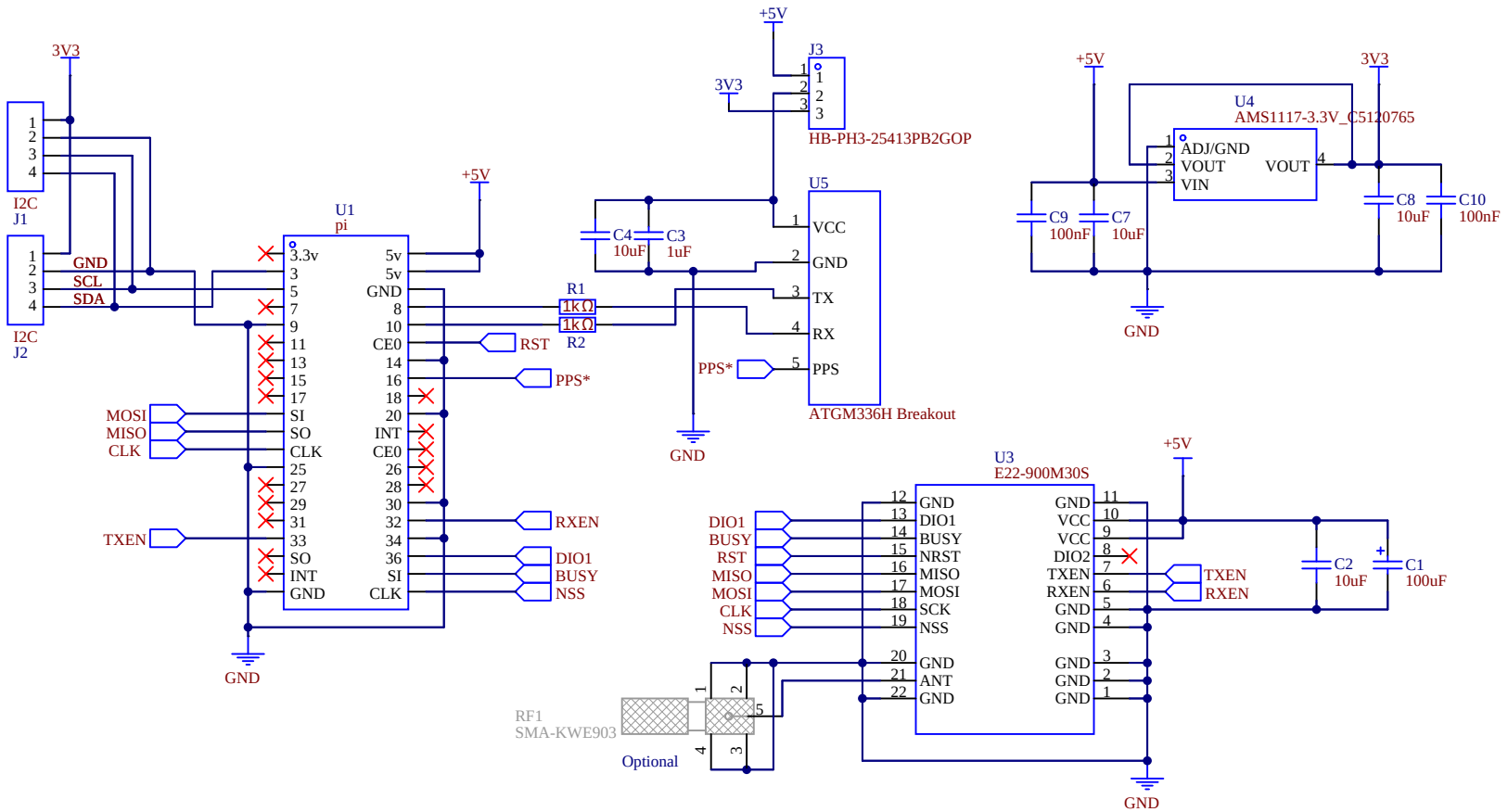

TITLE: Mesh Adv Pi Hat V1.1_2024-08-17_13-12-02		REV: 1.0
EasyEDA	Company:	Sheet: 1/1
	Date: 2024-07-28	Drawn By: Chris Myers

* Added to black PCB's only