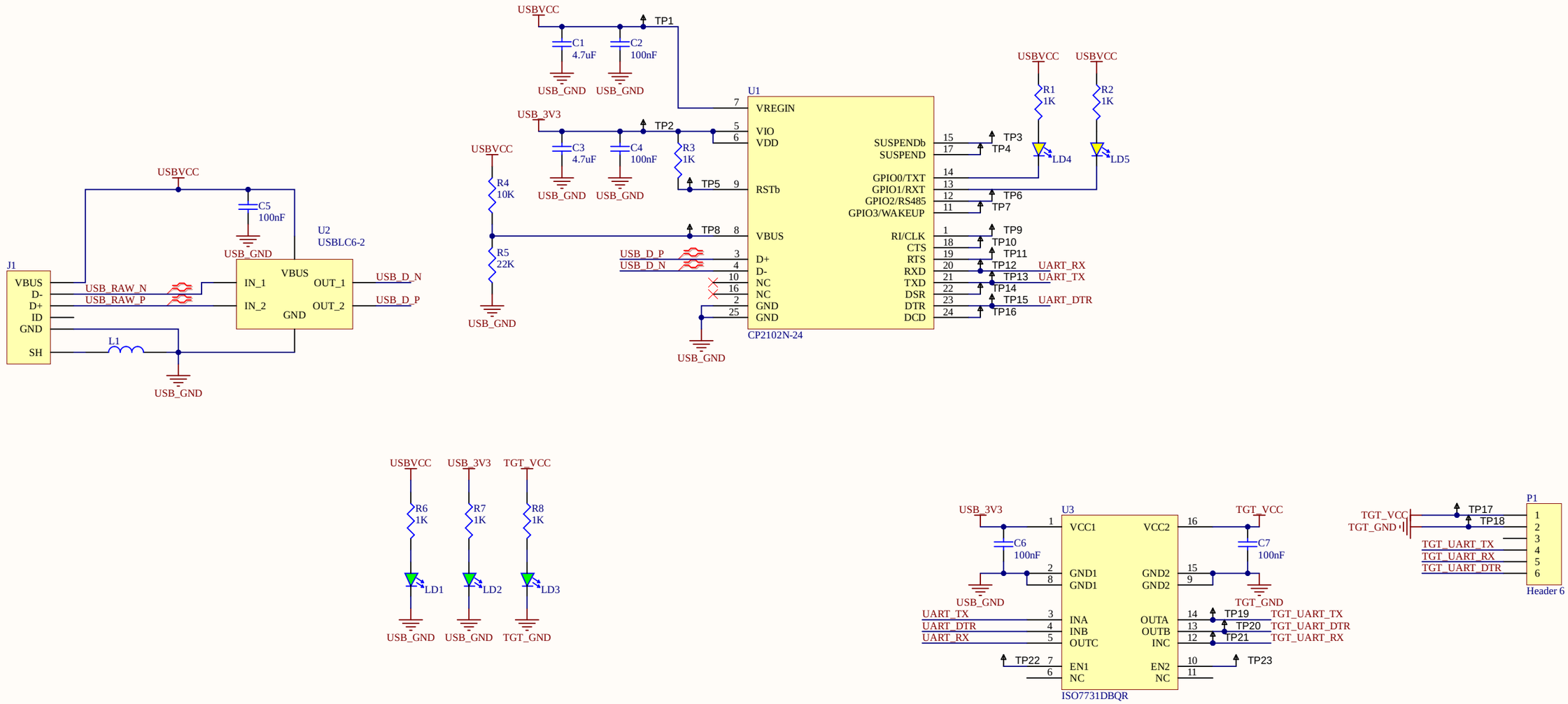

Isolated USB-UART Interface

Drawn: Chris Barr
Date: 30/11/2024
Rev: v1.0

MH1 MH2 MH3 MH4