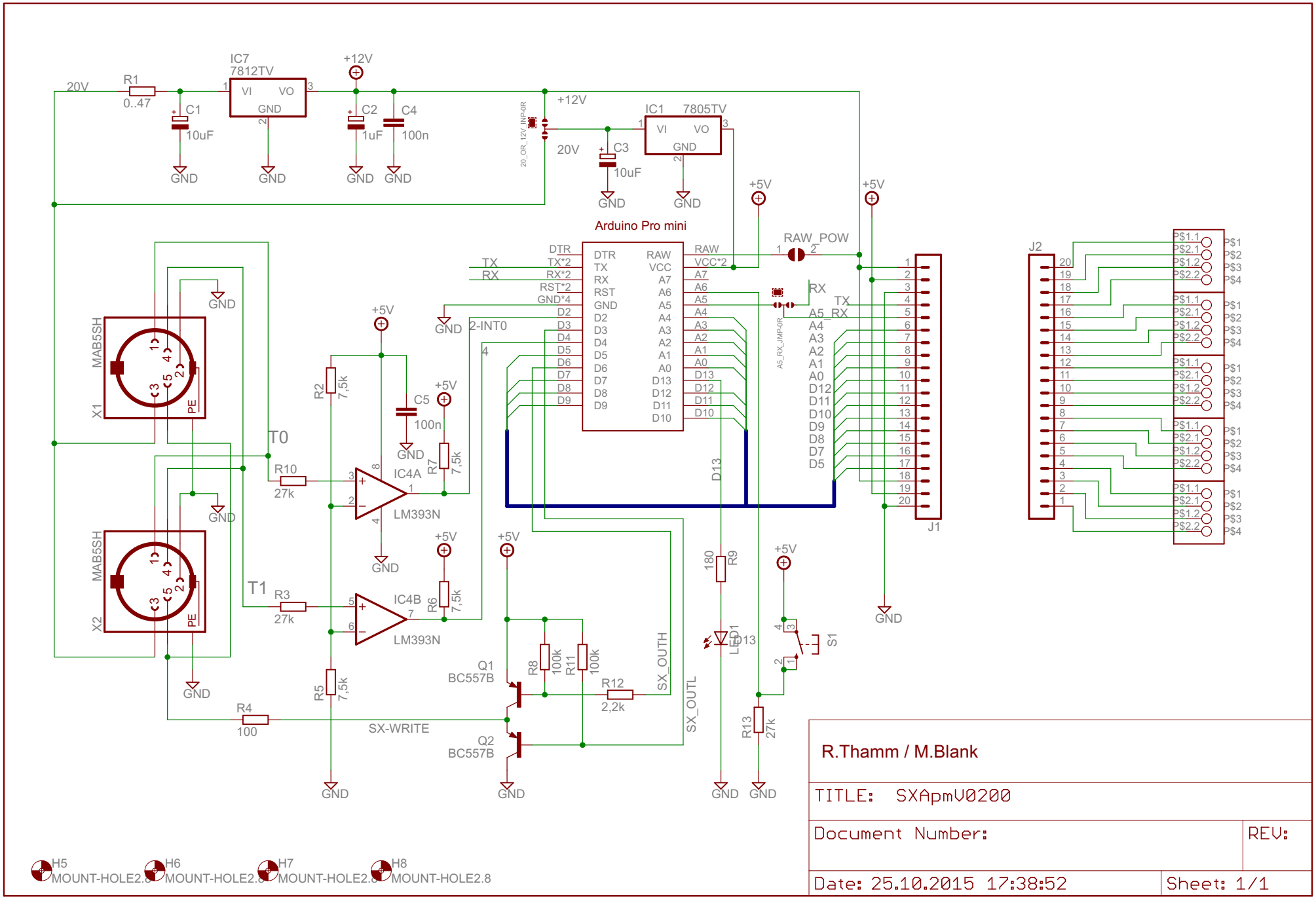


R.Thamm / M.Blank

TITLE: SXApmV0200

Document Number:

REV:

Date: 25.10.2015 17:38:52

Sheet: 1/1