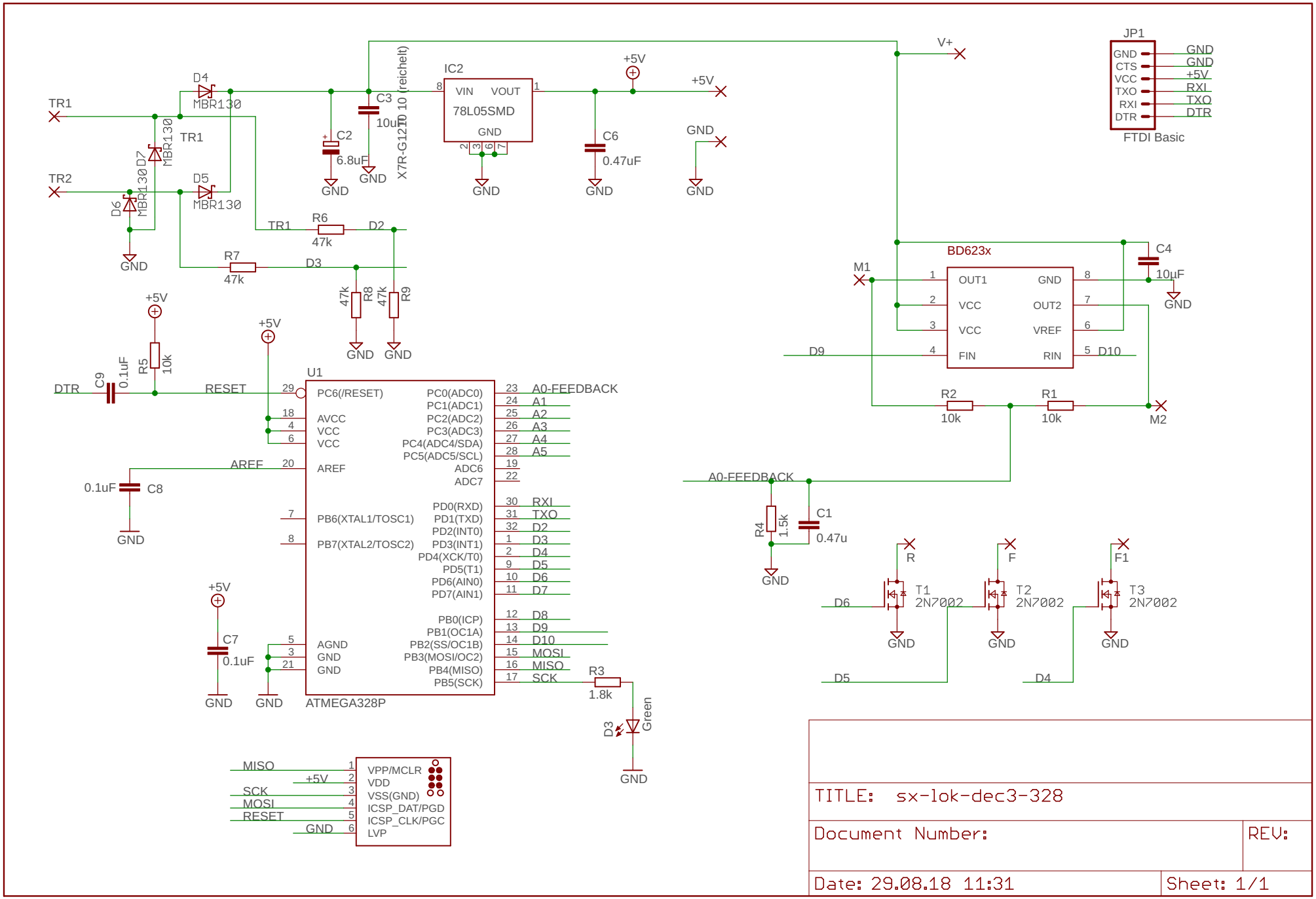

29.08.18 11:31 /home/mblank/eagle/sx-lok-dec3-328/sx-lok-dec3-328.sch (Sheet: 1/1)