Scheduled Meetups

1. Jan 26, 2026 5:00 PM

80's Arcade - Retro Tetris Game

Author: Yaasameen & Jonel
Status: DRAFT
Updated: 1/25/2026
PM: yaasameen@80sarcade.com

Problem

Modern Tetris games have strayed from the simplicity and authenticity of the original 1980s arcade experience. Current versions include excessive features, complex mechanics, and overwhelming visual effects that dilute the pure, engaging gameplay that made classic Tetris a timeless puzzle game. Players seeking the nostalgic, straightforward challenge of original Tetris cannot find an authentic retro experience that captures the essence of the NES/Game Boy era, including the strategic depth of the original scoring system that rewards skillful multi-line clears. Additionally, players want to track their progress, compete with others globally and with friends, and establish their gaming identity within the community - features that enhance engagement without compromising the retro authenticity.

Vision & Opportunity

"Bring back the authentic NES/Game Boy Tetris experience so users can enjoy a guilt-free pleasure that connects with their inner child, master the strategic depth of the original scoring system, compete with fellow gamers globally and with friends, and build their legacy on the leaderboard - appealing to gamers of all ages."

Opportunity
- Tap into the growing retro gaming market and nostalgia economy
- Provide the authentic NES/Game Boy scoring system that rewards strategic multi-line clears
- Enable social proof and community building through global and friend-based competition
- Create an accessible entry point for new players while honoring the original game mechanics
- Deliver the authentic feel of classic Tetris with modern web technology and community features
- Recreate the challenge of the infamous "kill screen" at level 29

Target Use Cases

1. **80's/90's Tetris Nostalgia Seekers** - Adults who played Tetris on NES/Game Boy looking to relive childhood memories and prove their skills
2. **Competitive Gamers** - Players looking for skill-based challenges with the authentic scoring system and global/weekly rankings
3. **Social Players** - Users who enjoy competing with friends and sharing achievements
4. **Strategic Players** - Gamers who understand the importance of "Tetris" (4-line clears) and want to maximize their scores
5. **Puzzle Game Enthusiasts** - Players seeking engaging problem-solving games with progressive difficulty
6. **Challenge Seekers** - Players aiming to survive the legendary level 29 "kill screen"

Landscape

Current Market
- **Modern Tetris variants** - Feature too many additions (hold queue, hard drop ghost pieces, complex scoring systems, battle modes)
- **Mobile Tetris apps** - Often include pay-to-win mechanics, ads, and microtransactions
- **Official Tetris versions** - Prioritize modern features over classic authenticity
- **Arcade-style sites** - Lack proper authentic NES/Game Boy scoring or have outdated UI/UX
- **Simplified versions** - Don't reward strategic play with exponential scoring or offer meaningful friend competition

Our Differentiation
- **Pure NES/Game Boy authenticity** - Original scoring system (40/100/300/1200 × (level+1))
- **Strategic depth** - Rewards players who master 4-line "Tetris" clears for maximum points
- **Focused competition** - Three clear leaderboard types: Global, Weekly, Friends
- **Social engagement** - Friend system for personal competition alongside global rankings
- **Original speed progression** - Authentic level-based gravity system with level 29 kill screen
- **Old school aesthetics** - 80's neon color palette, CRT-inspired visuals, arcade cabinet feel
- **Maximum score cap** - 999,999 points matching NES Tetris
- **Free, accessible** - Web-based, no downloads, no pay-walls

Proposed Solution

Our Top 4 MVP Value Props

1. **Authentic NES/Game Boy Tetris Experience** ⚡ (Vitamin + Painkiller)
   - Original BPS scoring system: Single (40), Double (100), Triple (300), Tetris (1200)
   - Score multiplied by (level + 1) for strategic depth

- Authentic speed progression matching NES/Game Boy gravity
- Level 29 "kill screen" for ultimate challenge
- Maximum score: 999,999

2. **Strategic Gameplay & Mastery** 🧠 (Steroid)
- Exponential scoring rewards skillful play
- "Tetris" (4-line clear) gives 30x more points than singles
- Players must strategically build for multi-line clears
- Soft drop scoring for precise placement
- Risk/reward decisions at higher levels

3. **Triple-Tier Competitive System** 🏆 (Steroid)
- **Global Leaderboard** - Compete against all players worldwide
- **Weekly Leaderboard** - Fresh competition every week with Monday resets
- **Friends Leaderboard** - Personal competition with your friend group
- Player profiles with stats and achievements
- Customizable arcade-style usernames
- Track "Tetris Rate" (percentage of 4-line clears)

4. **Intuitive Keyboard Controls** 🎮 (Vitamin)
- Arrow keys for directional movement (left/right)
- Down arrow for soft drop (earns points based on distance)
- Spacebar for block rotation
- Enter key for instant hard drop
- Pause functionality (P key)

Goals

Primary Goals
1. **Recreate authentic NES/Game Boy Tetris experience** - Honor the original scoring system, speed progression, and level 29 kill screen
2. **Enable strategic mastery** - Reward players who learn to build for multi-line clears, especially "Tetris"
3. **Build engaged gaming community** - Enable global and friend-based competition with authentic scoring
4. **Provide clear competitive structure** - Three focused leaderboard categories for different competitive contexts
5. **Deliver nostalgic challenge** - Connect players with the exact NES/Game Boy experience, including the legendary difficulty curve
6. **Appeal to gamers of all ages** - Accessible to both original players and new audiences seeking authentic retro challenge

Non-Goals
- Modern Tetris features (hold queue, T-spin scoring, ghost pieces, SRS rotation)
- Guideline Tetris scoring (different from NES/Game Boy)
- Multiple leaderboard categories beyond Global/Weekly/Friends (no daily, no level-specific, no mode-specific)
- Multiplayer or battle modes (beyond asynchronous leaderboard competition)
- Mobile touch controls (MVP focuses on keyboard gameplay)
- Monetization features (ads, in-app purchases)
- Sound effects and music (post-MVP enhancement)
- Levels beyond 29 (respecting the original kill screen)

Y1 Success Metrics

GOALS	SIGNALS	METRICS	TARGETS
Engagement & Adoption	Users find the game valuable and engaging	User interaction, Users returning, Session duration	>1000 7DAUs >65% 1-week retention >45% 7d stickiness >15% MoM user growth
Strategic Gameplay	Players learn and apply multi-line clear strategy	Tetris Rate (4-line clears) Average score per game Players reaching 100K+	>20% Tetris rate >15,000 avg score >10% reach 100K
Social Engagement	Players add friends and compete with them	Friend connections per user Friends leaderboard views Friend challenges issued	>5 friends per active user >300 friend board views/day >50 challenges/week
Community Building	Players create profiles and compete on leaderboards	Profile creation rate Global leaderboard views Weekly leaderboard engagement	>75% create profiles >500 global views/day >60% check weekly board
Mastery Progression	Players improve and reach higher levels	Players reaching Level 15+ Players reaching Level 20+ Players surviving Level 29	>30% reach L15+ >10% reach L20+ >1% survive L29
Competitive Engagement	Players strive to improve rankings	High score attempts Weekly reset participation Rank improvement rate	>3 attempts per session >40% play on Monday reset >40% improve within week
Viral Growth	Users share the game and invite friends	Social shares Friend invites sent Returning visitors	>50 shares/week >100 invites/week >55% returning visitors

---

Conceptual Model
```
```

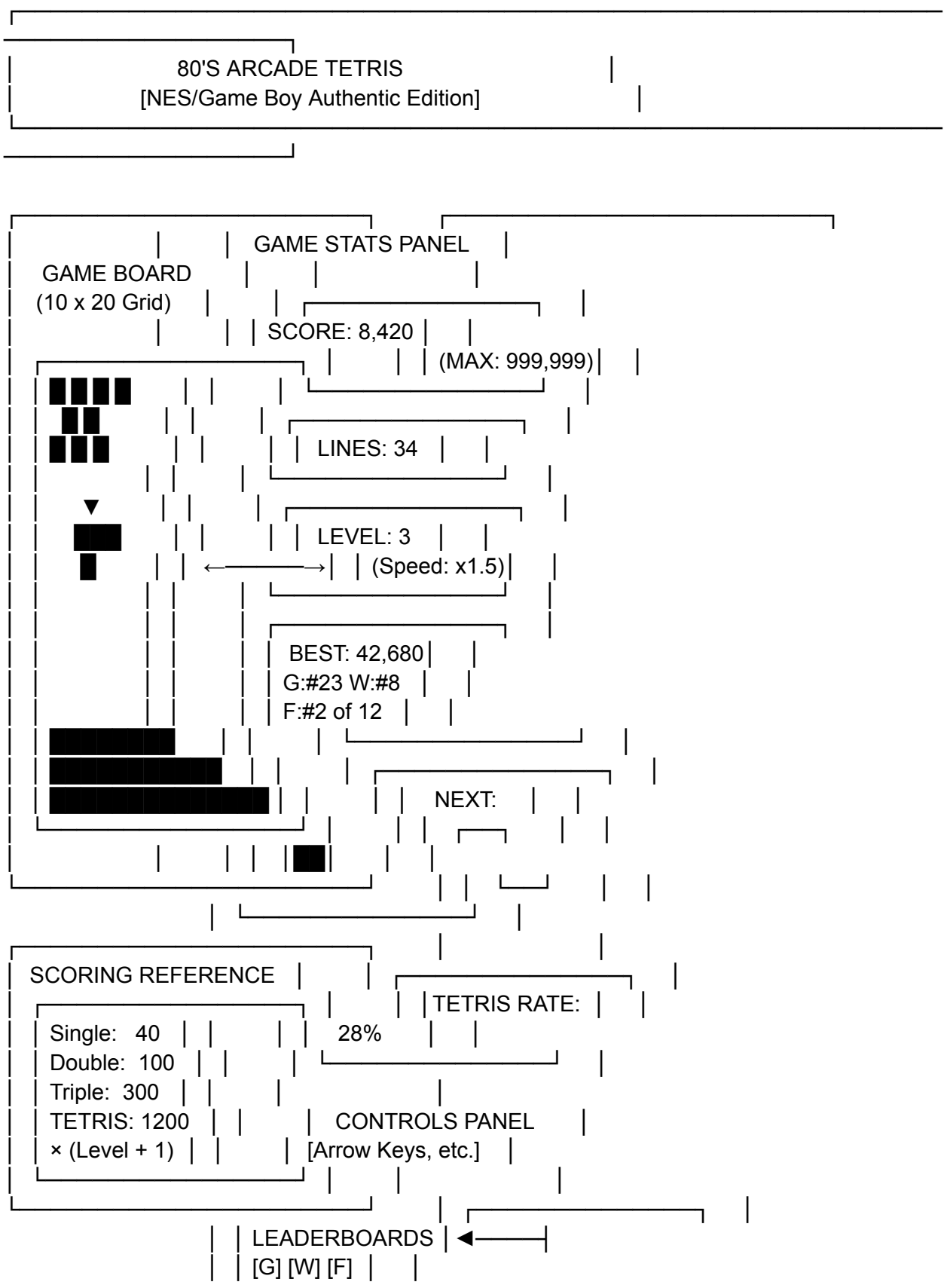
80'S ARCADE TETRIS
[NES/Game Boy Authentic Edition]
GAME BOARD
(10 x 20 Grid)
GAME STATS PANEL
SCORE: 8,420
(MAX: 999,999)
LINES: 34
LEVEL: 3
(Speed: x1.5)
BEST: 42,680
G:#23 W:#8
F:#2 of 12
NEXT:
SCORING REFERENCE
Single: 40
Double: 100
Triple: 300
TETRIS: 1200
× (Level + 1)
TETRIS RATE:
28%
CONTROLS PANEL
[Arrow Keys, etc.]
LEADERBOARDS
[G] [W] [F]

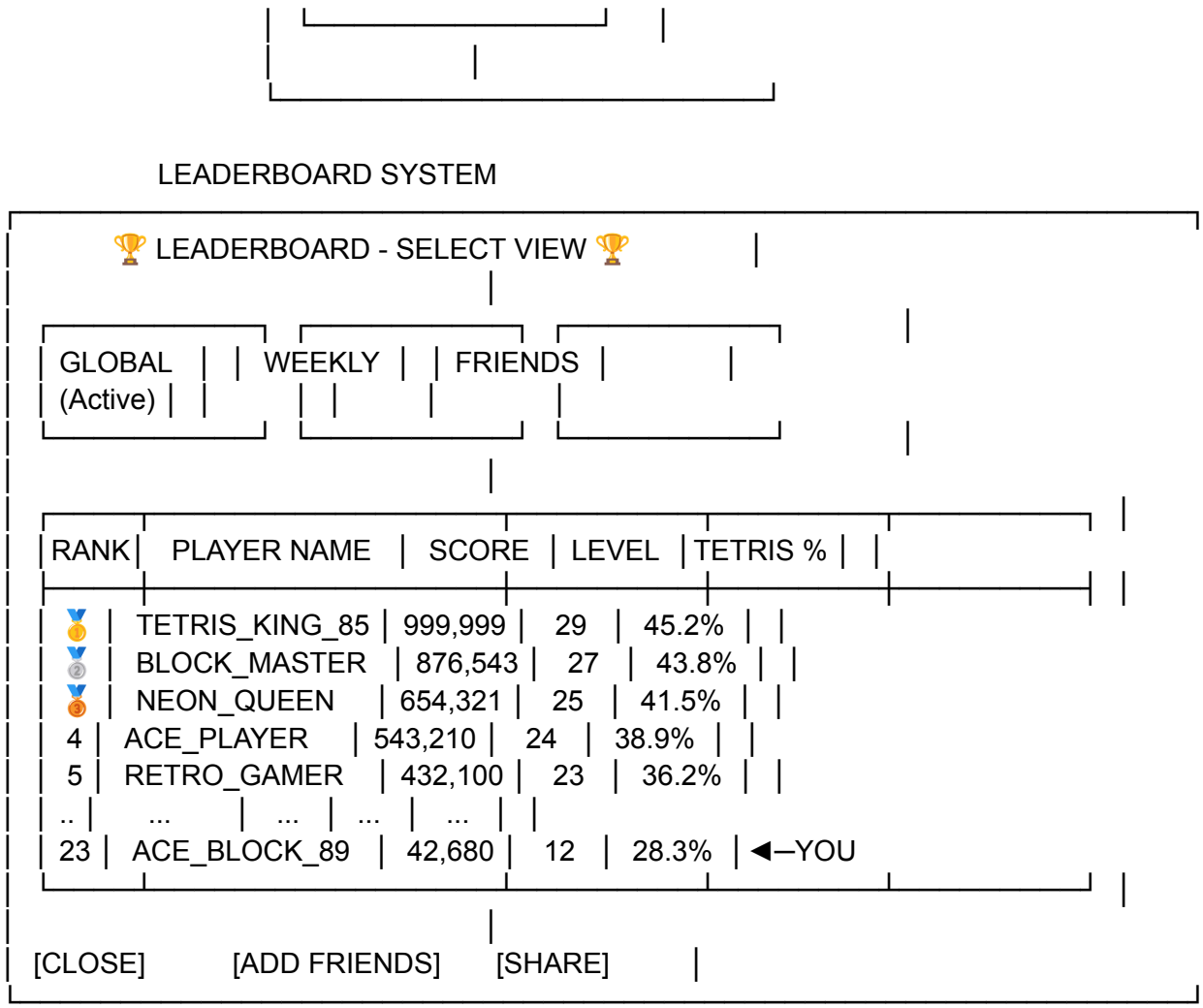
LEADERBOARD SYSTEM
🏆 LEADERBOARD - SELECT VIEW 🏆
GLOBAL (Active)
WEEKLY
FRIENDS
RANK | PLAYER NAME | SCORE | LEVEL | TETRIS %
1 | TETRIS_KING_85 | 999,999 | 29 | 45.2%
2 | BLOCK_MASTER | 876,543 | 27 | 43.8%
3 | NEON_QUEEN | 654,321 | 25 | 41.5%
4 | ACE_PLAYER | 543,210 | 24 | 38.9%
5 | RETRO_GAMER | 432,100 | 23 | 36.2%
.. | ... | ... | ... | ...
23 | ACE_BLOCK_89 | 42,680 | 12 | 28.3% | ◀—YOU
[CLOSE]
[ADD FRIENDS]
[SHARE]

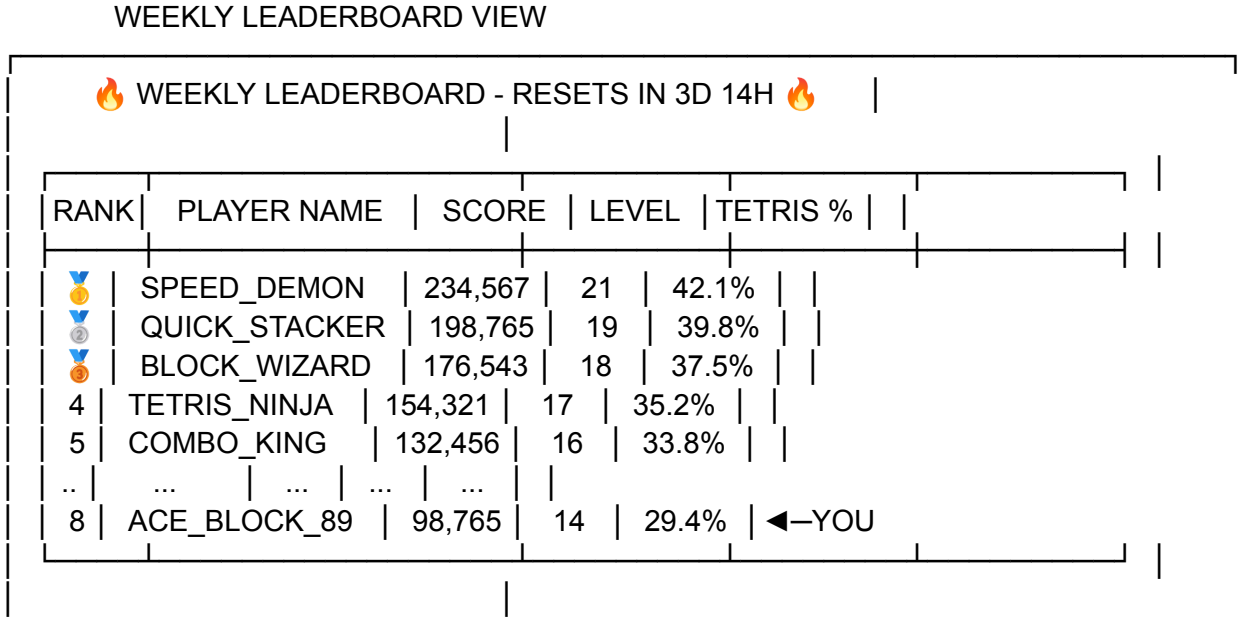
WEEKLY LEADERBOARD VIEW
🔥 WEEKLY LEADERBOARD - RESETS IN 3D 14H 🔥
RANK | PLAYER NAME | SCORE | LEVEL | TETRIS %
1 | SPEED_DEMON | 234,567 | 21 | 42.1%
2 | QUICK_STACKER | 198,765 | 19 | 39.8%
3 | BLOCK_WIZARD | 176,543 | 18 | 37.5%
4 | TETRIS_NINJA | 154,321 | 17 | 35.2%
5 | COMBO_KING | 132,456 | 16 | 33.8%
.. | ... | ... | ... | ...
8 | ACE_BLOCK_89 | 98,765 | 14 | 29.4% | ◀—YOU

```
│ Your Best This Week: 98,765 (Game played 2 days ago)  │
│ This week's rank: ↑ 15 (from last week's #23)         │
└──────────────────────────────────────────────────────────────────────┘
```

FRIENDS LEADERBOARD VIEW

```
┌──────────────────────────────────────────────────────────────────────┐
│        👥 FRIENDS LEADERBOARD (12 Friends) 👥          │
│                                  │
│  ┌────┬──────────────────┬──────────┬──────────┬──────────┐  │
│  │RANK│  FRIEND NAME  │  SCORE  │ LEVEL  │TETRIS % │  │
│  ├────┼──────────────────┼──────────┼──────────┼──────────┤  │
│  │ 1 │  SARAH_GAMER   │ 156,789 │   18   │  38.2%  │  │
│  │ 2 │  ACE_BLOCK_89  │  98,765 │   14   │  29.4%  │◄─YOU
│  │ 3 │  MIKE_BLOCKS   │  87,654 │   13   │  27.8%  │  │
│  │ 4 │  JENNY_TETRIS  │  76,543 │   12   │  26.1%  │  │
│  │ 5 │  ALEX_STACK    │  65,432 │   11   │  24.5%  │  │
│  │ 6 │  CHRIS_ARCADE  │  54,321 │   10   │  22.3%  │  │
│  │ 7 │  PAT_PLAYER    │  43,210 │    9   │  20.1%  │  │
│  │ 8 │  JAMIE_LINES   │  32,109 │    8   │  18.7%  │  │
│  │ 9 │  TAYLOR_GAME   │  21,098 │    7   │  16.2%  │  │
│  │ 10 │  JORDAN_FUN   │  10,987 │    5   │  14.5%  │  │
│  │ 11 │  CASEY_NEWBIE  │   5,432 │    3   │  12.1%  │  │
│  │ 12 │  RILEY_LEARN   │   1,234 │    1   │   8.3%  │  │
│  └────┴──────────────────┴──────────┴──────────┴──────────┘  │
│                                  │
│ [ADD MORE FRIENDS]    [CHALLENGE SARAH]          │
└──────────────────────────────────────────────────────────────────────┘
```

USER FLOW DIAGRAM

```
┌──────────────┐
│ LAND ON SITE│
└──────┬───────┘
    │
    ▼
┌──────────────┐    ┌──────────────────┐
│ Profile    │──YES──│ Show Profile  │
│ Exists?    │    │ Welcome Back! │
└──────┬───────┘    └──────────┬───────┘
    │          │
  NO │          │
    ▼          │
┌──────────────┐          │
│ Create     │          │
```

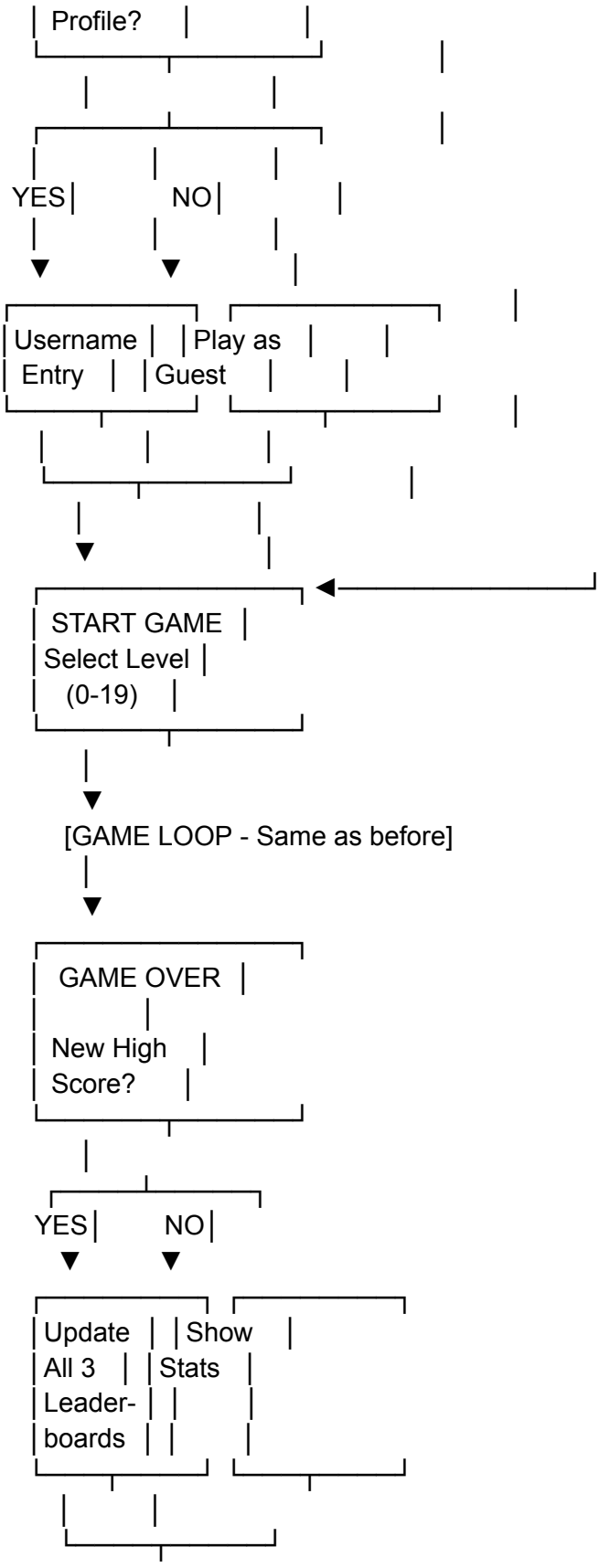
Profile?
YES
NO
Username Entry
Play as Guest
START GAME
Select Level
(0-19)
[GAME LOOP - Same as before]
GAME OVER
New High Score?
YES
NO
Update All 3 Leader-boards
Show Stats

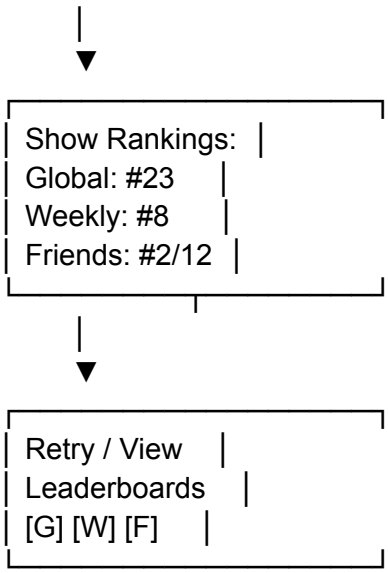

PROFILE DATA MODEL

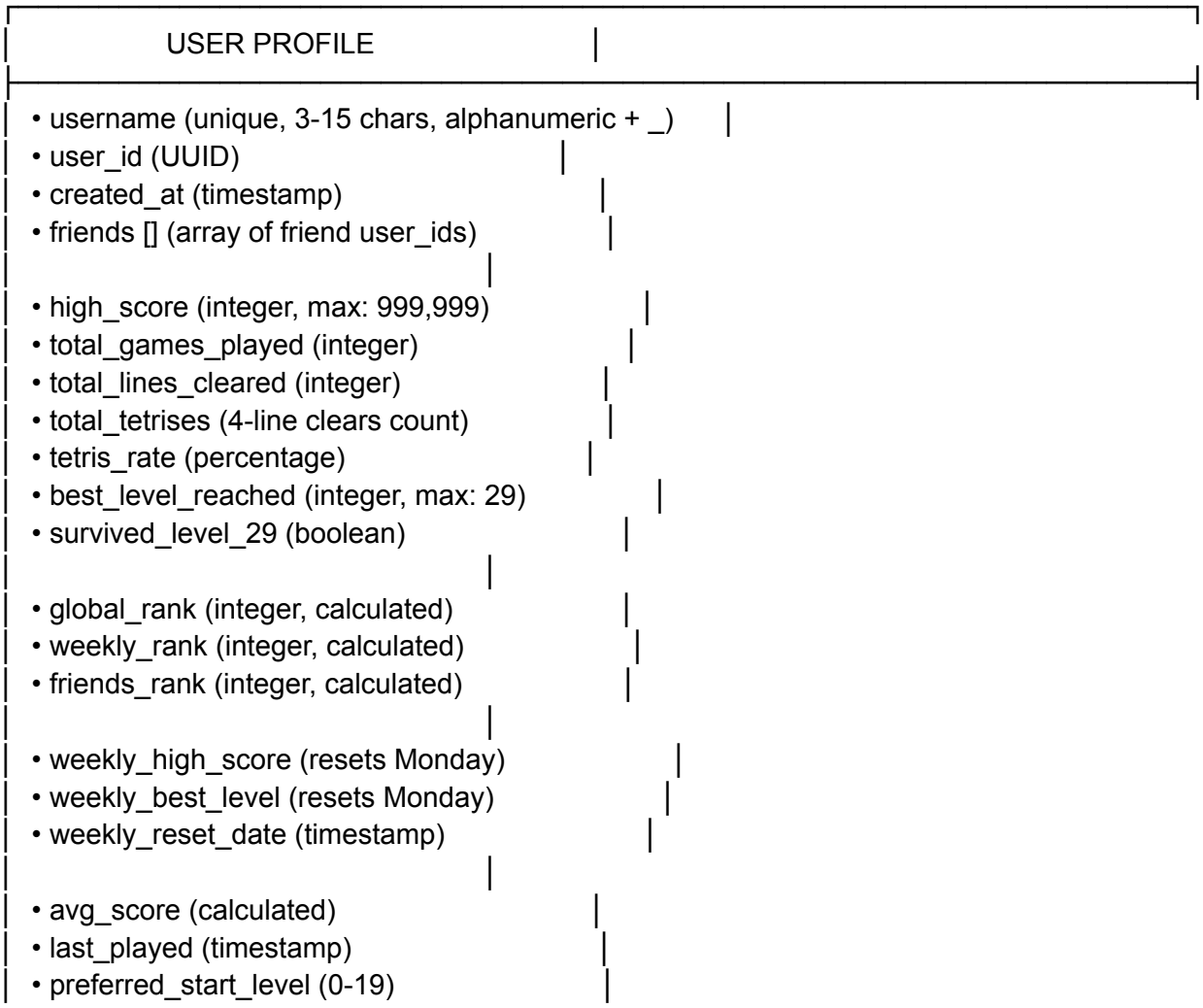

```
│ • game_history [] (last 10 games)                    │
└──────────────────────────────────────────────────────┘

            LEADERBOARD DATA MODELS

┌──────────────────────────────────────────────────────┐
│            GLOBAL LEADERBOARD ENTRY                  │
├──────────────────────────────────────────────────────┤
│ • rank (integer, auto-calculated)                    │
│ • user_id (UUID, reference)                          │
│ • username (string)                                  │
│ • score (integer, max: 999,999)                      │
│ • level_reached (integer)                            │
│ • lines_cleared (integer)                            │
│ • tetrises_cleared (integer)                         │
│ • tetris_rate (percentage)                           │
│ • starting_level (0-19)                              │
│ • survived_29 (boolean)                              │
│ • timestamp (when achieved)                          │
└──────────────────────────────────────────────────────┘

┌──────────────────────────────────────────────────────┐
│            WEEKLY LEADERBOARD ENTRY                  │
├──────────────────────────────────────────────────────┤
│ • rank (integer, auto-calculated)                    │
│ • user_id (UUID, reference)                          │
│ • username (string)                                  │
│ • score (integer, max: 999,999)                      │
│ • level_reached (integer)                            │
│ • tetris_rate (percentage)                           │
│ • week_start_date (Monday timestamp)                 │
│ • timestamp (when achieved this week)                │
│ • rank_change (vs last week, e.g., +5, -3, NEW)      │
└──────────────────────────────────────────────────────┘

┌──────────────────────────────────────────────────────┐
│            FRIENDS LEADERBOARD (Calculated)          │
├──────────────────────────────────────────────────────┤
│ • Generated dynamically from user's friends list     │
│ • Pulls high_score from each friend's profile        │
│ • Sorted by high_score (all-time best)               │
│ • Shows: rank, username, score, level, tetris_rate   │
│ • Total friend count displayed                       │
└──────────────────────────────────────────────────────┘
```

Key Game Elements

Tetrominos (Game Pieces):
- **I-Block** (Cyan) - 4x1 straight line (essential for Tetris clears)
- **O-Block** (Yellow) - 2x2 square
- **T-Block** (Purple) - T-shaped
- **S-Block** (Green) - S-shaped
- **Z-Block** (Red) - Z-shaped
- **J-Block** (Blue) - J-shaped
- **L-Block** (Orange) - L-shaped

Game Board:
- 10 columns × 20 rows grid
- Each cell = 30px × 30px
- Black background with subtle grid lines

Scoring System (NES/Game Boy BPS):
- **Single line:** 40 × (level + 1)
- **Double lines:** 100 × (level + 1)
- **Triple lines:** 300 × (level + 1)
- **Tetris (4 lines):** 1200 × (level + 1)
- **Soft drop:** +1 point per grid space dropped
- **Maximum score:** 999,999 (score caps at this value)

Level Progression:
- Level increases every 10 lines cleared
- Starting level selectable (0-19)
- Speed increases with each level
- Level 19: Maximum normal speed
- Levels 20-28: Extreme speed
- Level 29: "Kill screen" - nearly unplayable speed (1 frame per drop)

Leaderboard Structure:
- **Global:** All-time best scores across all players
- **Weekly:** Best scores this week (resets every Monday at midnight UTC)
- **Friends:** Personal leaderboard showing only your friends' best scores

Player Identity:
- Unique arcade-style username (3-15 characters)
- Personal stats dashboard
- Triple ranking (Global, Weekly, Friends)
- Friend management system
- Achievement tracking

Requirements

Legend:
- **[P0]** = MVP for initial release
- **[P1]** = Important for delightful experience
- **[P2]** = Nice-to-have / Post-MVP

Leaderboard System

Global Leaderboard
- **[P0]** Display top 100 players ranked by all-time high score
- **[P0]** Leaderboard shows: rank, username, score, level reached, Tetris rate
- **[P0]** Current user's position highlighted on leaderboard
- **[P0]** Leaderboard accessible via dedicated button in UI
- **[P0]** Tab interface to switch between Global/Weekly/Friends views
- **[P0]** Leaderboard updates in real-time when new high scores achieved
- **[P0]** Ties broken by: 1) level reached, 2) Tetris rate, 3) timestamp (earlier = higher)
- **[P0]** Maximum score entries (999,999) sorted by level/Tetris rate/timestamp
- **[P0]** "999,999 Club" badge for max score achievers
- **[P0]** "Level 29 Survivor" badge displayed
- **[P1]** Smooth scroll to user's position on leaderboard
- **[P1]** Top 3 players have special visual treatment (🥇🥈🥉 medals)
- **[P1]** Rank badges/icons for top 10
- **[P2]** Pagination for viewing beyond top 100

Weekly Leaderboard
- **[P0]** Display top 100 players ranked by best score this week
- **[P0]** Weekly leaderboard resets every Monday at 00:00 UTC
- **[P0]** Shows: rank, username, score, level, Tetris rate
- **[P0]** Countdown timer showing time until next weekly reset
- **[P0]** Current user's weekly position highlighted
- **[P0]** Weekly scores are independent from global (fresh competition each week)
- **[P0]** User's best score from current week displayed
- **[P0]** Same tie-breaking rules as global (level, Tetris rate, timestamp)
- **[P1]** Display rank change from previous week (↑ +5, ↓ -3, NEW)
- **[P1]** "This week's champion" celebration for #1 at week end
- **[P1]** Historical view of previous weeks' winners
- **[P2]** Weekly leaderboard archive (view past weeks)

Friends Leaderboard
- **[P0]** Display all friends ranked by their all-time high score
- **[P0]** Shows: rank among friends, username, score, level, Tetris rate
- **[P0]** Current user's position highlighted among friends
- **[P0]** Friend count displayed (e.g., "#2 of 12 friends")
- **[P0]** "Add Friends" button prominently displayed
- **[P0]** Empty state message when user has no friends yet
- **[P0]** Friends leaderboard updates when friend scores improve
- **[P1]** "Challenge" button next to each friend to match their starting level
- **[P1]** Recently active friends highlighted (played in last 24 hours)
- **[P1]** Friend's recent scores shown (not just all-time best)
- **[P2]** Filter to show only online friends

Leaderboard Interactions
- **[P0]** Click username to view player's profile (any leaderboard type)
- **[P0]** Tab navigation: [GLOBAL] [WEEKLY] [FRIENDS]
- **[P0]** Close button to return to game
- **[P0]** Share button for sharing rank on social media
- **[P1]** Search for specific player on Global/Weekly leaderboards
- **[P1]** Quick jump to "My Position" button
- **[P2]** Export leaderboard as image

Friends System

Adding Friends
- **[P0]** Users can add friends by username search
- **[P0]** Friend requests sent and must be accepted
- **[P0]** Pending friend requests displayed in profile
- **[P0]** Accept/Decline buttons for incoming requests
- **[P0]** Friend list stored in user profile
- **[P0]** Maximum 100 friends per user
- **[P1]** Friend suggestions based on recent opponents or similar skill level
- **[P1]** Shareable friend code for easy adding
- **[P1]** QR code for adding friends in person
- **[P2]** Import friends from social media

Managing Friends
- **[P0]** View complete friends list in profile
- **[P0]** Remove friends from list
- **[P0]** Friends list shows: username, high score, last played
- **[P0]** Click friend to view their full profile
- **[P1]** Sort friends by: score, recently active, alphabetical

- **[P1]** Online status indicator (green dot if playing now)
- **[P1]** Notification when friend beats your score
- **[P2]** Friend groups/categories (e.g., "Family", "Coworkers")

Friend Interactions
- **[P0]** View friend's profile and stats
- **[P0]** Challenge friend (notification sent to try to beat your score)
- **[P1]** Send in-app message to friend
- **[P1]** Share achievement with specific friends
- **[P2]** Co-op challenges (e.g., combined line goals)

User Profiles & Authentication

Profile Creation
- **[P0]** Users can create a profile with a unique username
- **[P0]** Username must be 3-15 characters (alphanumeric and underscores only)
- **[P0]** System validates username uniqueness in real-time
- **[P0]** Profile is stored locally (localStorage) for MVP
- **[P0]** Users can play as guest without creating profile (scores not saved, can't add friends)
- **[P0]** Profile creation happens before first game or can be skipped
- **[P1]** Username suggestions if desired name is taken
- **[P1]** Profile avatars (preset retro arcade icons)
- **[P2]** Email-based authentication for cross-device access
- **[P2]** Password-protected accounts

Profile Management
- **[P0]** Users can view their profile with all-time stats
- **[P0]** Profile displays: username, global rank, weekly rank, friends rank
- **[P0]** Profile shows: high score, total games, total lines, Tetris rate
- **[P0]** Profile tracks best level reached and level 29 survival status
- **[P0]** Profile shows friend count and friends list
- **[P0]** Users can edit their username (subject to uniqueness validation)
- **[P0]** Profile persists across browser sessions (localStorage)
- **[P1]** Users can delete their profile and all associated data
- **[P1]** Profile displays recent game history (last 10 games)
- **[P1]** Profile shows preferred starting level
- **[P1]** Weekly stats section (this week's performance)
- **[P2]** Profile customization (color themes, badges)
- **[P2]** Export stats as shareable image

Session Management
- **[P0]** Returning users are automatically recognized (no re-login)

- **[P0]** Profile loads on page load
- **[P0]** Current session score compared to personal best in real-time
- **[P0]** Display all three rankings during gameplay (Global, Weekly, Friends)
- **[P1]** "Welcome back, [username]!" message on return
- **[P1]** Display time since last played
- **[P1]** Show weekly rank change since last session
- **[P1]** Resume last starting level preference

Score Tracking & Stats

Real-time Stats During Gameplay
- **[P0]** Current game score displayed (up to 999,999)
- **[P0]** Current game lines cleared displayed
- **[P0]** Current level displayed
- **[P0]** Tetris count displayed (number of 4-line clears)
- **[P0]** Tetris rate percentage displayed
- **[P0]** Personal best score displayed
- **[P0]** Three rankings displayed: "G:#23 W:#8 F:#2"
- **[P0]** Starting level indicated
- **[P1]** Visual indicator when beating personal best
- **[P1]** Visual indicator when improving any rank
- **[P1]** Progress bar toward next level
- **[P1]** Points from last clear shown
- **[P2]** Live score projection to 999,999

Post-Game Stats
- **[P0]** Game over screen shows: final score, lines cleared, level reached
- **[P0]** Display Tetris count and Tetris rate for the game
- **[P0]** Display if new personal best achieved
- **[P0]** Display all three rank changes:
  - Global: "#23 → #18 (↑5)"
  - Weekly: "#12 → #8 (↑4)"
  - Friends: "#3 → #2 (↑1) of 12"
- **[P0]** Show if maximum score (999,999) reached
- **[P1]** Compare current game to personal average
- **[P1]** Display improvement percentage
- **[P1]** Breakdown of points by clear type (singles/doubles/triples/Tetrises)
- **[P1]** Highlight which leaderboard(s) were affected
- **[P2]** Detailed breakdown (avg. lines per level, time played, starting level)

Profile Statistics
- **[P0]** All-time high score (max: 999,999)

- **[P0]** Total games played
- **[P0]** Total lines cleared
- **[P0]** Total Tetrises (4-line clears)
- **[P0]** Overall Tetris rate percentage
- **[P0]** Best level reached
- **[P0]** Survived level 29 badge (yes/no)
- **[P0]** Current global rank
- **[P0]** Current weekly rank
- **[P0]** Current friends rank and friend count
- **[P0]** Weekly high score (separate from all-time)
- **[P1]** Average score per game
- **[P1]** Preferred starting level
- **[P1]** Recent game history with starting levels
- **[P1]** Best score per starting level
- **[P1]** Week-over-week improvement stats
- **[P2]** Graphs showing score progression over time
- **[P2]** Play time statistics
- **[P2]** Score distribution histogram

Core Gameplay
[Same as previous version - NES/Game Boy scoring, speed system, controls, etc.]

Visual Design

Leaderboard Design
- **[P0]** Full-screen overlay with retro arcade aesthetic
- **[P0]** Trophy icon/header with "🏆 LEADERBOARD 🏆" text
- **[P0]** Three-tab interface at top: [GLOBAL] [WEEKLY] [FRIENDS]
- **[P0]** Active tab highlighted with neon glow
- **[P0]** Table format showing: Rank, Username, Score, Level, Tetris Rate
- **[P0]** Alternating row colors for readability (dark/darker)
- **[P0]** Highlighted row for current user (neon cyan border)
- **[P0]** Top 3 players have emoji medals (🥇🥈🥉)
- **[P0]** "999,999 Club" badge (⭐) displayed next to max scores
- **[P0]** "Level 29 Survivor" badge (💀) displayed
- **[P0]** Close button to return to game
- **[P0]** Weekly tab shows countdown timer to reset
- **[P0]** Friends tab shows friend count and "Add Friends" button
- **[P1]** Smooth fade-in animation when opening
- **[P1]** Rank badges/icons for top 10 (gold, silver, bronze themed)

- **[P1]** Rank change indicators on Weekly board (↑↓ arrows with colors)
- **[P1]** Empty state for Friends board: "Add friends to compete!"
- **[P1]** Visual distinction between three leaderboard types (color accents)
- **[P2]** Scrolling ticker showing recent high scores
- **[P2]** Confetti animation for top 3 positions

Ranking Display in Game
- **[P0]** Compact rank panel shows all three ranks:
```
  RANKINGS
  Global:  #23
  Weekly:  #8
  Friends: #2 of 12
```
- **[P0]** Ranks update in real-time during gameplay if exceeded
- **[P0]** Color coding: Global (cyan), Weekly (yellow), Friends (pink)
- **[P1]** Rank improvement animation (number flips up with glow effect)
- **[P1]** Trophy icon next to rank panel
- **[P2]** Mini progress bar showing distance to next rank

Friends UI Elements
- **[P0]** Friend list modal accessible from profile
- **[P0]** Add friend button prominently displayed
- **[P0]** Friend search interface (username search box)
- **[P0]** Pending requests section (incoming/outgoing)
- **[P0]** Accept/Decline buttons with retro styling
- **[P1]** Friend online status (green dot indicator)
- **[P1]** Last played timestamp for each friend
- **[P1]** Friend profile preview on hover
- **[P2]** Friend notification badges

Technical Requirements

Leaderboard Management

Global Leaderboard
- **[P0]** Stores all-time high scores
- **[P0]** Persistent storage (localStorage for MVP)
- **[P0]** Sorting algorithm optimized for top 100
- **[P0]** Real-time updates when new scores posted
- **[P0]** Rank calculation on score submission
- **[P0]** Tie-breaking algorithm: score → level → Tetris rate → timestamp

- **[P1]** Caching mechanism for faster loads
- **[P2]** Backend database for true global persistence

Weekly Leaderboard
- **[P0]** Separate data structure from global
- **[P0]** Automatic reset every Monday 00:00 UTC
- **[P0]** Tracks best score per user per week
- **[P0]** Week identifier (e.g., "2026-W04") for archiving
- **[P0]** Countdown timer calculation (milliseconds to next Monday)
- **[P0]** Previous week's rank stored for comparison
- **[P1]** Archive previous weeks' data (last 4 weeks minimum)
- **[P1]** Week-over-week rank change calculation
- **[P2]** Historical analytics (best week, average weekly rank, etc.)

Friends Leaderboard
- **[P0]** Dynamically generated from friends list
- **[P0]** Pulls high_score from each friend's profile
- **[P0]** Sorts friends by score in real-time
- **[P0]** Recalculates when any friend updates score
- **[P0]** No separate storage (calculated on demand)
- **[P1]** Cache friends' scores for performance
- **[P1]** Batch updates when multiple friends improve
- **[P2]** Subscription to friends' score changes

Friends System Storage
- **[P0]** User profile stores friends array (user_ids)
- **[P0]** Friend request system (pending_incoming, pending_outgoing arrays)
- **[P0]** Bidirectional friendship (both users have each other in friends list)
- **[P0]** Friend data validation on load
- **[P0]** Maximum 100 friends enforced
- **[P1]** Friend search index for fast username lookup
- **[P1]** Friend activity tracking (last_played timestamps)
- **[P2]** Backend for cross-device friend sync

Data Storage (MVP - localStorage)
```javascript
// Global Leaderboard
{
  leaderboard_global: [
    { rank, user_id, username, score, level, tetris_rate, timestamp }
  ]
}

// Weekly Leaderboard
```

```
{
  leaderboard_weekly: {
    current_week: "2026-W04",
    week_start: "2026-01-20T00:00:00Z",
    week_end: "2026-01-27T00:00:00Z",
    entries: [
      { rank, user_id, username, score, level, tetris_rate, timestamp, rank_change }
    ]
  },
  leaderboard_weekly_archive: {
    "2026-W03": { entries: [...] },
    "2026-W02": { entries: [...] }
  }
}

// User Profile
{
  user_id: "uuid",
  username: "ACE_BLOCK_89",
  friends: ["friend_uuid_1", "friend_uuid_2"],
  friend_requests_incoming: ["uuid_3"],
  friend_requests_outgoing: ["uuid_4"],

  high_score: 98765,
  global_rank: 23,

  weekly_high_score: 45678,
  weekly_rank: 8,
  weekly_previous_rank: 23,
  current_week: "2026-W04",

  friends_rank: 2,
  friends_total: 12
}
```

Performance
- **[P0]** Leaderboard loads in <2 seconds
- **[P0]** Rank calculations complete in <100ms
- **[P0]** Friends leaderboard generation <500ms even with 100 friends
- **[P0]** Weekly reset process completes in <1 second
- **[P1]** Optimized sorting algorithms (avoid full re-sort on updates)
- **[P1]** Lazy loading for leaderboards beyond top 100
- **[P2]** Background worker for leaderboard calculations

Data Synchronization
- **[P0]** localStorage sync between browser tabs
- **[P0]** Leaderboard updates propagate to all open tabs
- **[P0]** Friend requests sync across tabs
- **[P1]** Conflict resolution for simultaneous score updates
- **[P2]** Backend real-time sync via WebSockets

Post-MVP Features (Future Enhancements)

Enhanced Social Features
- **[P1]** Direct messaging between friends
- **[P1]** Friend activity feed (recent scores, achievements)
- **[P1]** Group challenges (team competitions)
- **[P1]** Friend recommendations based on skill level
- **[P2]** Clans/teams with team leaderboards
- **[P2]** Tournament system with brackets
- **[P2]** Live spectating friends' games
- **[P2]** Replay sharing with friends

Enhanced Leaderboard Features
- **[P1]** Leaderboard filtering (by starting level, by date range)
- **[P1]** Personal leaderboard history graph
- **[P1]** "Near me" view (players ranked just above/below you)
- **[P2]** Regional leaderboards (by country/city)
- **[P2]** Time-trial leaderboards (fastest to X score)
- **[P2]** Longest survival streaks leaderboard
- **[P2]** Custom challenge leaderboards

Weekly Competition Enhancements
- **[P1]** Weekly prizes/badges for top 3
- **[P1]** Weekly challenges (e.g., "Most Tetrises this week")
- **[P1]** Email/notification for weekly reset
- **[P1]** Weekly recap showing your performance
- **[P2]** Monthly meta-leaderboard (sum of weekly ranks)
- **[P2]** Seasonal championships (quarterly)

Profile Enhancements
- **[P1]** Achievement/badge system:
  - "Social Butterfly" (10+ friends)
  - "Weekly Warrior" (Top 10 in weekly board)
  - "Friend Champion" (#1 among friends)

  - "Rivalry" (beat specific friend 5 times)
- **[P1]** Profile customization (themes, avatars)
- **[P1]** Statistics comparison with friends
- **[P2]** Profile bio and social links
- **[P2]** Customizable profile banners

Appendix

Leaderboard Reset Schedule

Weekly Leaderboard:
- Resets: Every Monday at 00:00 UTC
- Duration: 7 days (Monday 00:00 to Sunday 23:59)
- Previous week archived automatically
- Rank changes calculated based on previous week
- Countdown timer always visible on weekly board

Why Monday?
- Standard start of competitive week
- Gives weekend players fresh competition
- Aligns with work/school week for routine

Friend System Philosophy

Why Friends Leaderboard Matters:
- Personal competition more engaging than anonymous global
- Social proof and bragging rights among peers
- Lower barrier than global top 100 (achievable goals)
- Encourages friend invites (viral growth)
- Creates persistent mini-communities

Friend Limit Rationale:
- 100 friends maximum prevents performance issues
- Keeps friends list meaningful (quality over quantity)
- Leaderboard remains readable and competitive
- Technical constraint for localStorage efficiency

Technology Stack

Frontend:
- React with JSX for artifact rendering
- React Hooks (useState, useEffect, useCallback, useRef)

- requestAnimationFrame for 60 FPS game loop

Leaderboard Logic:
- JavaScript sorting algorithms (optimized for top-N queries)
- Binary search for rank insertion
- Memoization for friends leaderboard calculations

Storage (MVP):
- localStorage for all data
- Separate keys for global/weekly/profiles
- JSON serialization
- Data validation on load
- Weekly reset via cron-like timer check

Backend (Post-MVP):
- Firebase/Supabase for real-time leaderboards
- WebSockets for live updates
- PostgreSQL for relational data (friends, profiles)
- Redis for leaderboard caching
- Scheduled jobs for weekly resets

User Flows

Competitive Player Weekly Flow
1. Monday morning: Check weekly leaderboard
2. See weekly board reset, currently unranked
3. Play game, score 45,000
4. Weekly rank: #15
5. Check friends board, currently #3 of 12
6. Play again throughout week
7. Thursday: Improve to 78,000, weekly rank #6
8. Saturday: Beat friend's score, friends rank #2
9. Sunday evening: Final push, score 98,000
10. Weekly rank #8, friends rank #1
11. Celebrate and share achievement
12. Monday reset: Ready for next week

Social Player Flow
1. Land on site, create profile
2. Play first game, score 12,000
3. View global board (#487), weekly (#234), no friends
4. Click "Add Friends"
5. Search for friend "SARAH_GAMER"
6. Send friend request

7. Sarah accepts, now friends board shows "#2 of 1"
8. Add 5 more friends
9. Friends board now shows competitive ranking
10. See Sarah beat your score
11. Play again to reclaim #1 among friends
12. Challenge Sarah directly
13. Continue friend competition loop

End of PRD

Mini-PRD: Leaderboard System

Overview
Three-tier competitive ranking system: Global (all-time), Weekly (resets Monday), Friends (personal network).

Leaderboard Types

1. Global Leaderboard
Purpose: All-time high scores across all players
Scope: Everyone who has ever played
Reset: Never (permanent)
Display: Top 100
Sorting: Score DESC → Level DESC → Tetris Rate DESC → Timestamp ASC

2. Weekly Leaderboard
Purpose: Fresh competition every week
Scope: All players' best score from current week
Reset: Every Monday 00:00 UTC
Display: Top 100
Sorting: Same as Global
Special Features:
- Countdown to next reset
- Rank change vs previous week
- Archives last 4 weeks

3. Friends Leaderboard
Purpose: Personal competition network
Scope: User's friends only (max 100)
Reset: Never (shows all-time bests)

Display: All friends
Sorting: Same as Global
Special Features:
- Shows total friend count
- "Add Friends" CTA when empty
- Challenge buttons per friend

Data Models
```javascript
// Global Entry
{
  rank: 23,
  user_id: "uuid",
  username: "ACE_BLOCK_89",
  score: 98765,
  level: 14,
  tetris_rate: 29.4,
  survived_29: false,
  timestamp: "2026-01-25T14:20:00Z"
}

// Weekly Entry
{
  rank: 8,
  user_id: "uuid",
  username: "ACE_BLOCK_89",
  score: 45678,
  level: 12,
  tetris_rate: 28.1,
  week_id: "2026-W04",
  timestamp: "2026-01-25T14:20:00Z",
  rank_change: 15, // vs last week
  rank_change_direction: "up" // or "down" or "new"
}

// Friends Entry (calculated dynamically)
{
  rank: 2, // among friends
  user_id: "uuid",
  username: "ACE_BLOCK_89",
  score: 98765,
  level: 14,
  tetris_rate: 29.4,
  is_current_user: true,
```

```
  last_played: "2 hours ago"
}
```

Weekly Reset Logic
```javascript
function checkWeeklyReset() {
  const now = new Date();
  const currentWeekId = getWeekId(now); // e.g., "2026-W04"
  const storedWeekId = localStorage.getItem('current_week_id');

  if (currentWeekId !== storedWeekId) {
    // Archive last week
    archiveWeeklyLeaderboard(storedWeekId);

    // Reset weekly leaderboard
    resetWeeklyLeaderboard(currentWeekId);

    // Update week ID
    localStorage.setItem('current_week_id', currentWeekId);
  }
}

function getWeekId(date) {
  // Returns "YYYY-WNN" format (ISO week)
  const week = getISOWeek(date);
  const year = date.getFullYear();
  return `${year}-W${week.toString().padStart(2, '0')}`;
}

function getNextMonday() {
  const now = new Date();
  const day = now.getDay();
  const daysUntilMonday = day === 0 ? 1 : 8 - day;
  const nextMonday = new Date(now);
  nextMonday.setDate(now.getDate() + daysUntilMonday);
  nextMonday.setHours(0, 0, 0, 0);
  return nextMonday;
}
```

Mini-PRD: Friends System

Overview
Social networking feature enabling players to connect and compete with friends through dedicated leaderboard.

Core Features

Adding Friends
1. Search by username
2. Send friend request
3. Recipient accepts/declines
4. Bidirectional friendship established

Managing Friends
- View all friends (max 100)
- See friend stats (score, level, last played)
- Remove friends
- View friend profiles

Friend Requests
- Incoming requests queue
- Outgoing requests queue
- Accept/Decline actions
- Request expiration (30 days)

Data Model
```javascript
// User Profile (friends section)
{
  user_id: "uuid",
  username: "ACE_BLOCK_89",

  friends: [
    "friend_uuid_1",
    "friend_uuid_2",
    // ... max 100
  ],

  friend_requests_incoming: [
    {
      from_user_id: "uuid_3",
      from_username: "SARAH_GAMER",
      timestamp: "2026-01-24T10:30:00Z"
    }
```

```
  ],

  friend_requests_outgoing: [
    {
      to_user_id: "uuid_4",
      to_username: "MIKE_BLOCKS",
      timestamp: "2026-01-23T15:45:00Z"
    }
  ],

  friend_count: 12 // calculated
}
```

Friend Request Flow
```javascript
function sendFriendRequest(fromUserId, toUsername) {
  // 1. Find target user
  const toUser = findUserByUsername(toUsername);
  if (!toUser) return { error: "User not found" };

  // 2. Check if already friends
  if (fromUser.friends.includes(toUser.user_id)) {
    return { error: "Already friends" };
  }

  // 3. Check if request already exists
  if (hasOutgoingRequest(fromUserId, toUser.user_id)) {
    return { error: "Request already sent" };
  }

  // 4. Add to outgoing (sender)
  fromUser.friend_requests_outgoing.push({
    to_user_id: toUser.user_id,
    to_username: toUser.username,
    timestamp: new Date().toISOString()
  });

  // 5. Add to incoming (recipient)
  toUser.friend_requests_incoming.push({
    from_user_id: fromUserId,
    from_username: fromUser.username,
    timestamp: new Date().toISOString()
  });
```

```
  // 6. Save both profiles
  saveProfile(fromUser);
  saveProfile(toUser);

  return { success: true };
}

function acceptFriendRequest(userId, fromUserId) {
  // 1. Remove from incoming requests
  removeFromIncoming(userId, fromUserId);

  // 2. Remove from sender's outgoing requests
  removeFromOutgoing(fromUserId, userId);

  // 3. Add to both friends lists
  addToFriendsList(userId, fromUserId);
  addToFriendsList(fromUserId, userId);

  // 4. Save both profiles
  saveProfile(user);
  saveProfile(sender);

  return { success: true };
}
```

Friends Leaderboard Generation
```javascript
function generateFriendsLeaderboard(userId) {
  const user = getProfile(userId);
  const friendsData = [];

  // Get each friend's data
  for (const friendId of user.friends) {
    const friend = getProfile(friendId);
    friendsData.push({
      user_id: friend.user_id,
      username: friend.username,
      score: friend.high_score,
      level: friend.best_level_reached,
      tetris_rate: friend.tetris_rate,
      last_played: friend.last_played,
      is_current_user: false
```

```
    });
  }

  // Add current user
  friendsData.push({
    user_id: user.user_id,
    username: user.username,
    score: user.high_score,
    level: user.best_level_reached,
    tetris_rate: user.tetris_rate,
    last_played: user.last_played,
    is_current_user: true
  });

  // Sort by score
  friendsData.sort((a, b) => {
    if (b.score !== a.score) return b.score - a.score;
    if (b.level !== a.level) return b.level - a.level;
    if (b.tetris_rate !== a.tetris_rate) return b.tetris_rate - a.tetris_rate;
    return new Date(a.last_played) - new Date(b.last_played);
  });

  // Add ranks
  friendsData.forEach((friend, index) => {
    friend.rank = index + 1;
  });

  return {
    entries: friendsData,
    total_friends: user.friends.length,
    user_rank: friendsData.find(f => f.is_current_user).rank
  };
}
```