3 tap Pre-Emphasis Design 130nm

Christian Turjuman

Posedge tspc dff schematic:

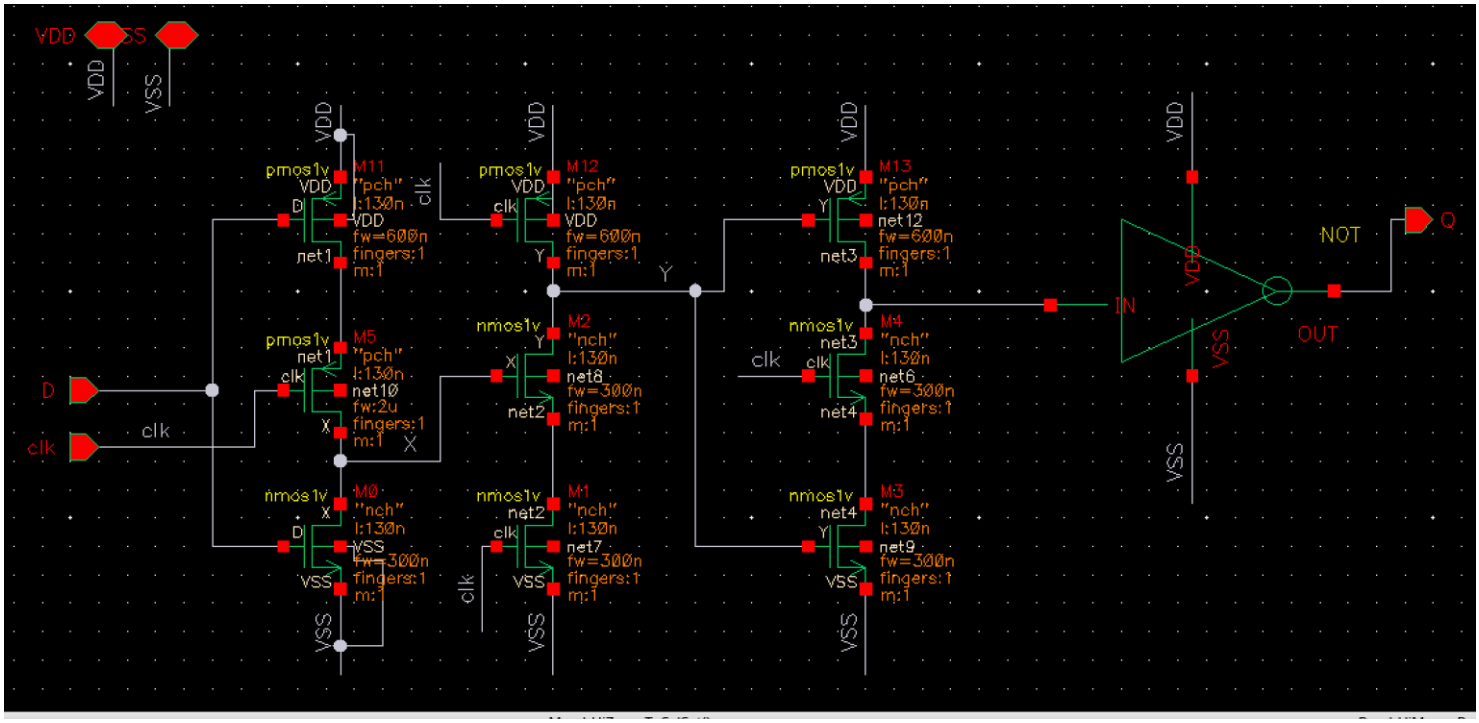

Posedge tspc dff testbench + result

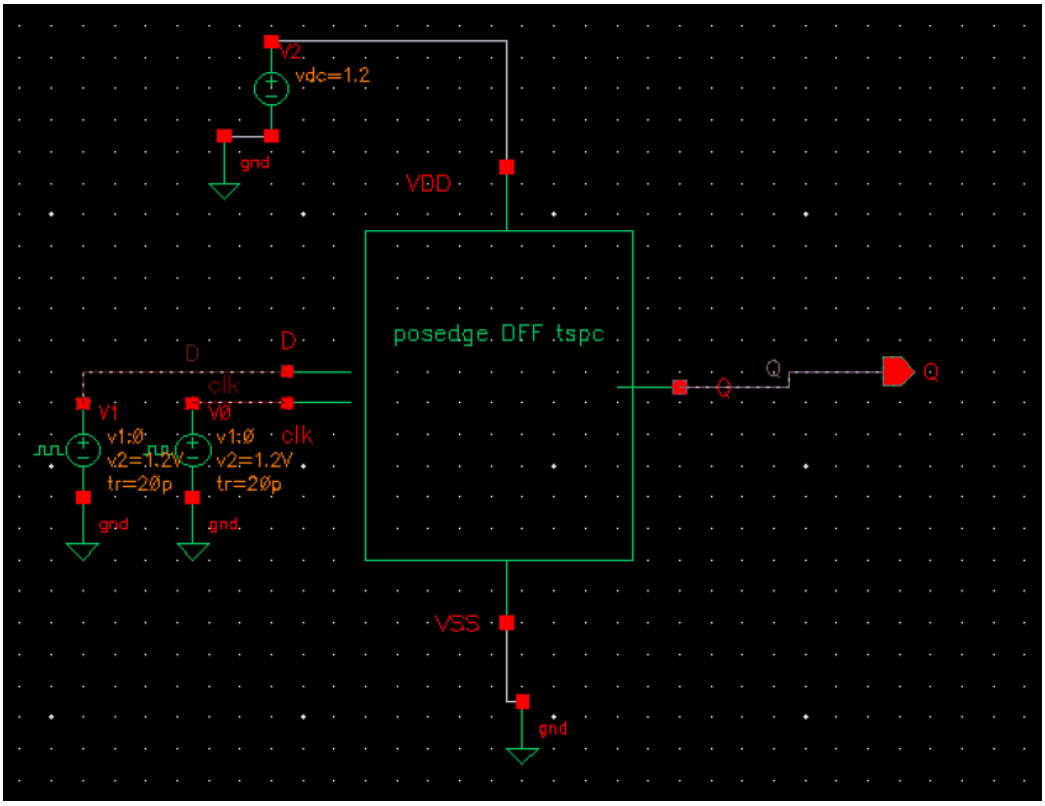

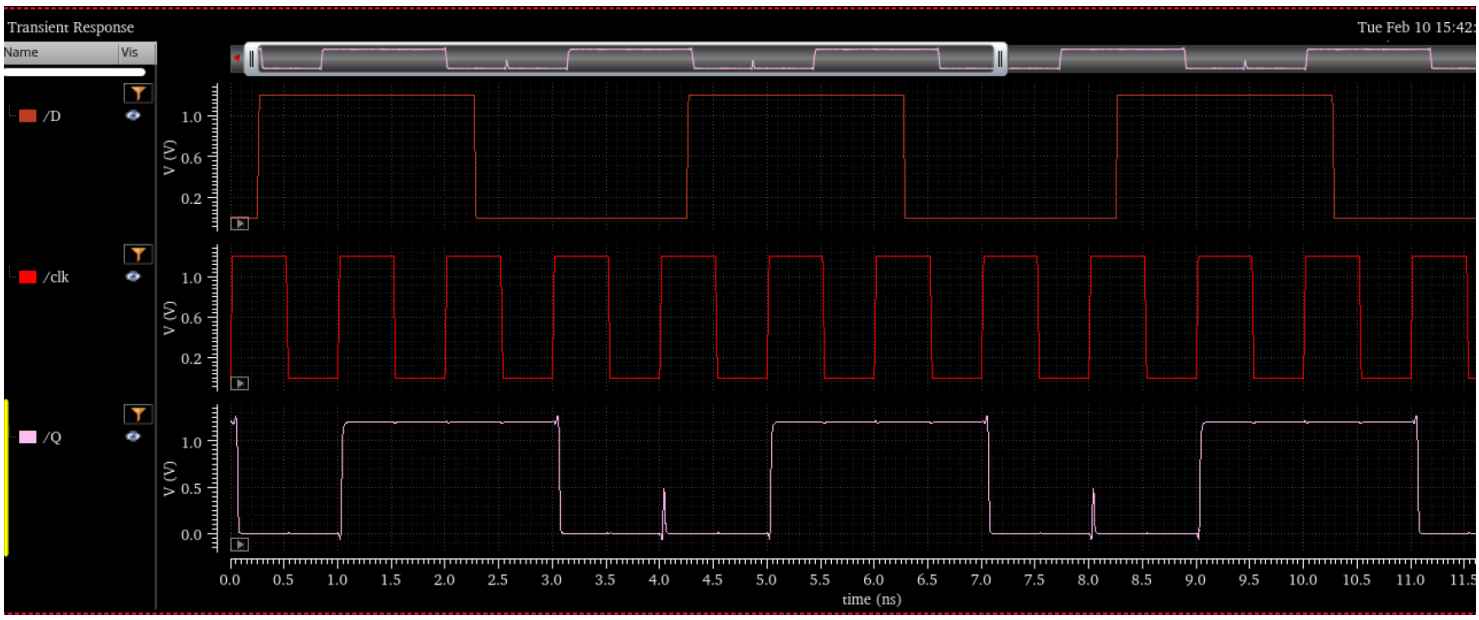

Negedge tspc dff schematic

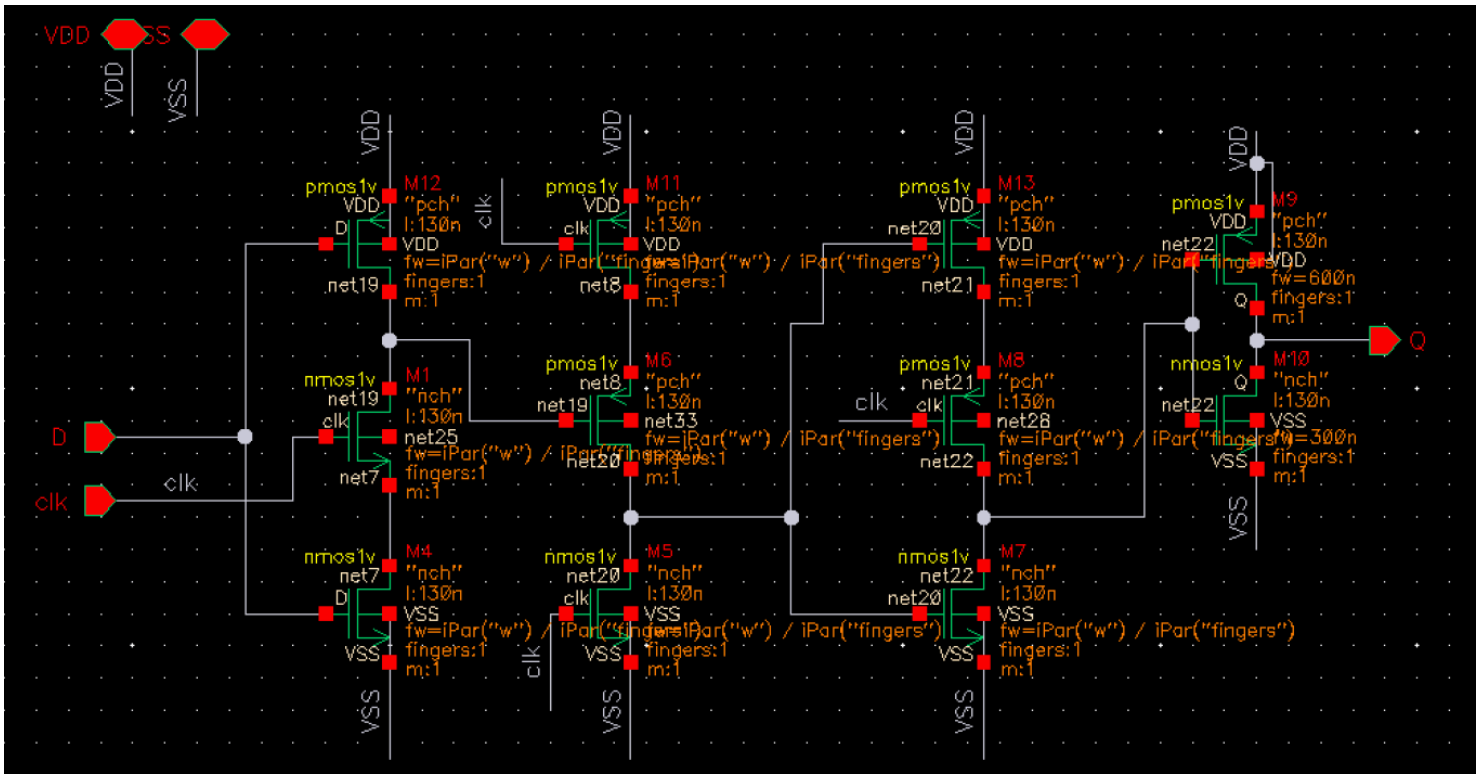

Negedge tspc tb+ results

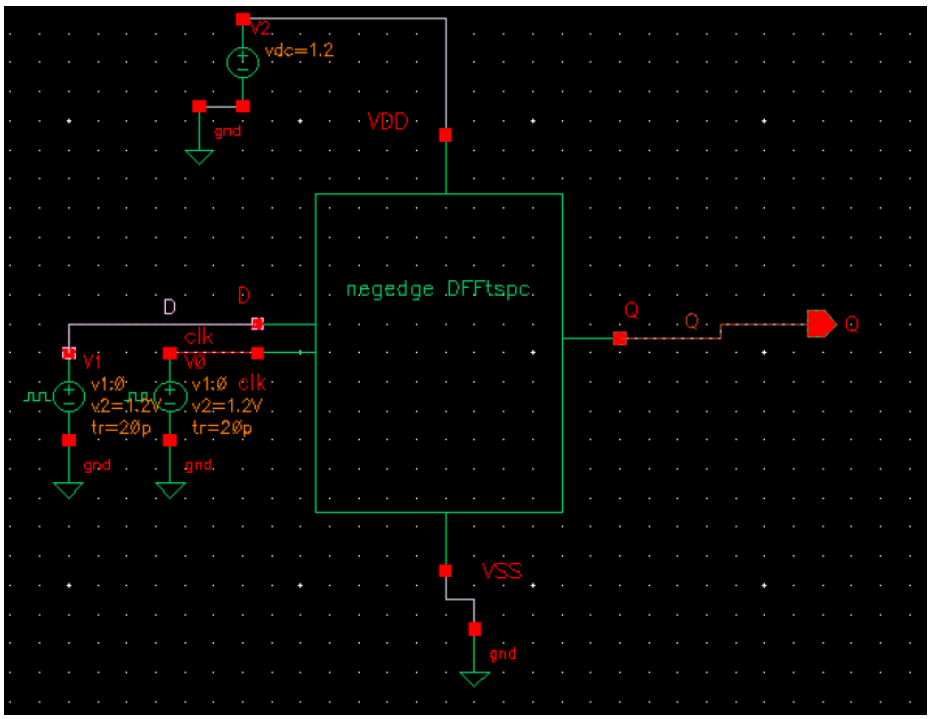
V2
vdc=1.2
gnd
VDD
negedge DFFtspc
D
D
clk
V1
V0
v1:0
v2=1.2V
tr=20p
v1:0 clk
v2=1.2V
tr=20p
gnd
gnd
Q
Q
Q
VSS
gnd

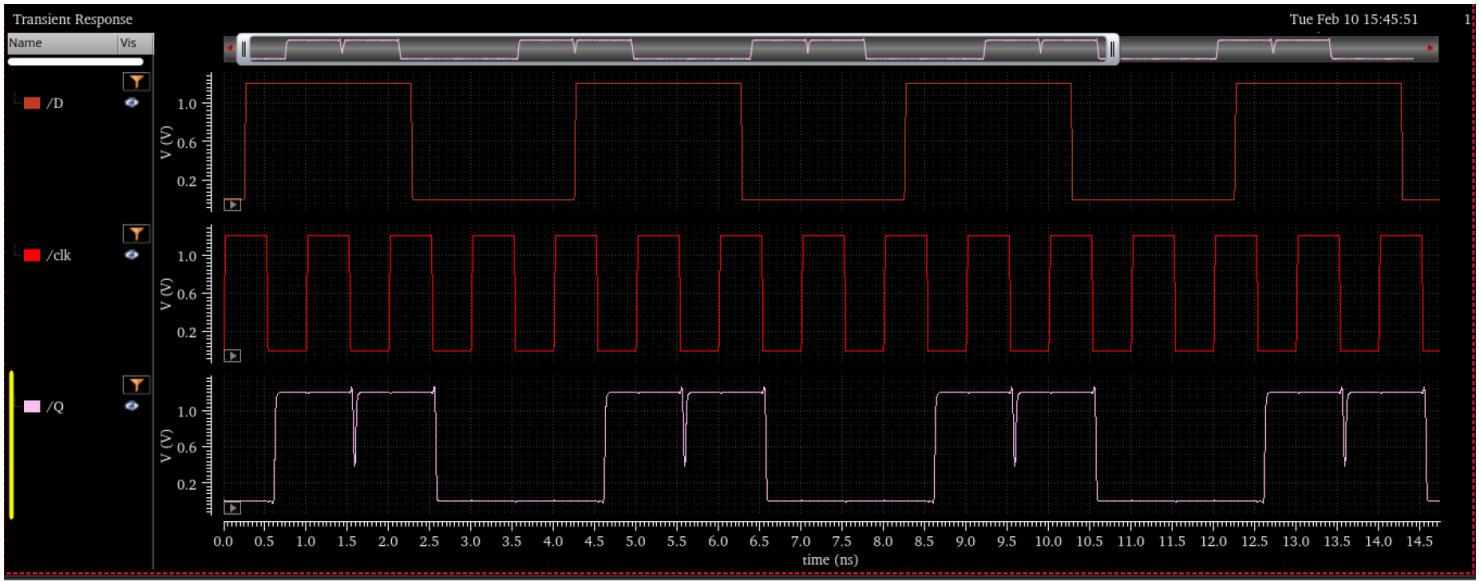
Transient Response
Tue Feb 10 15:45:51
Name
Vis
/D
/clk
/Q
V (V)
1.0
0.6
0.2
0.0 0.5 1.0 1.5 2.0 2.5 3.0 3.5 4.0 4.5 5.0 5.5 6.0 6.5 7.0 7.5 8.0 8.5 9.0 9.5 10.0 10.5 11.0 11.5 12.0 12.5 13.0 13.5 14.0 14.5
time (ns)

Unit Delay Cell Schematic:

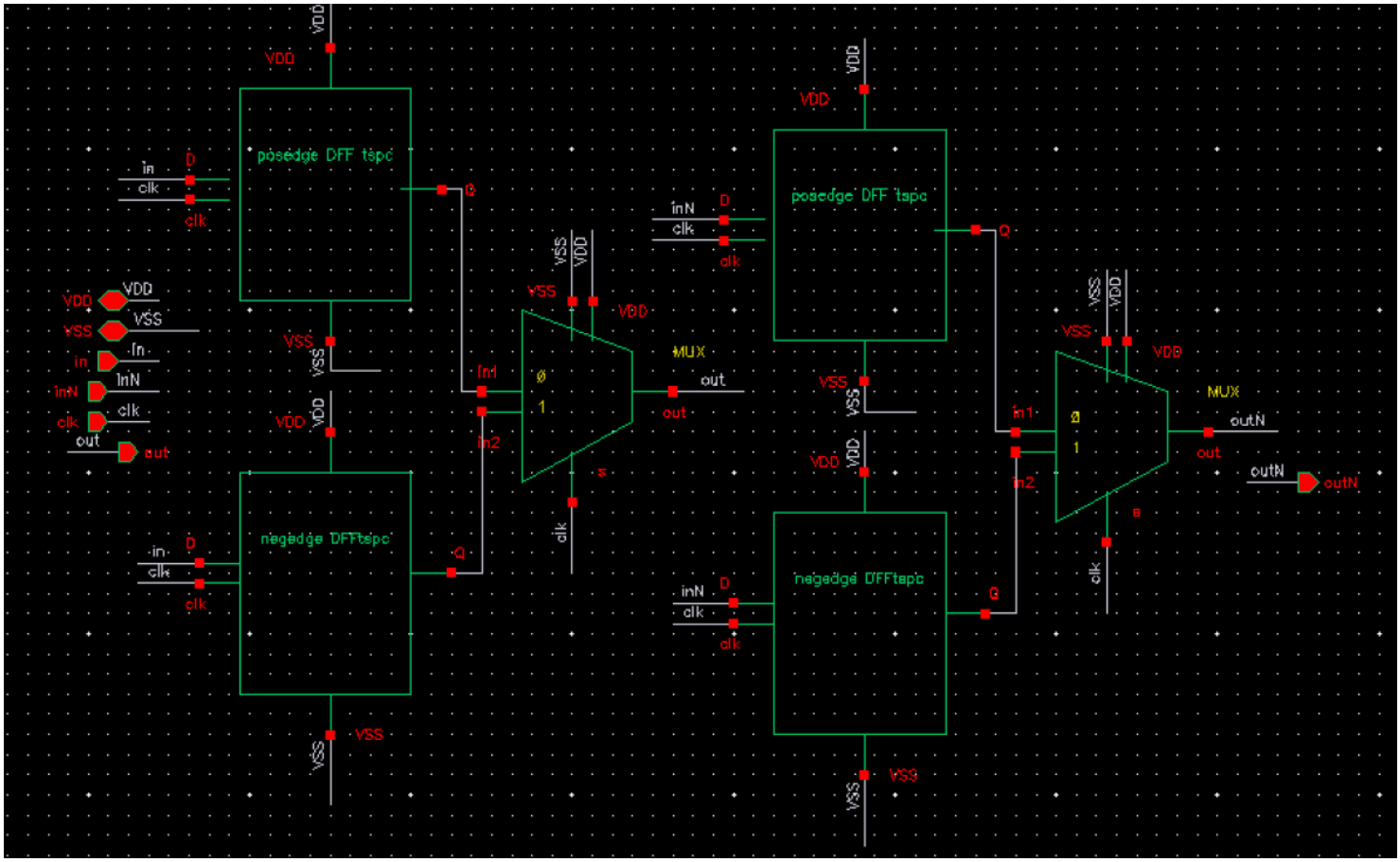

unit delay testbench

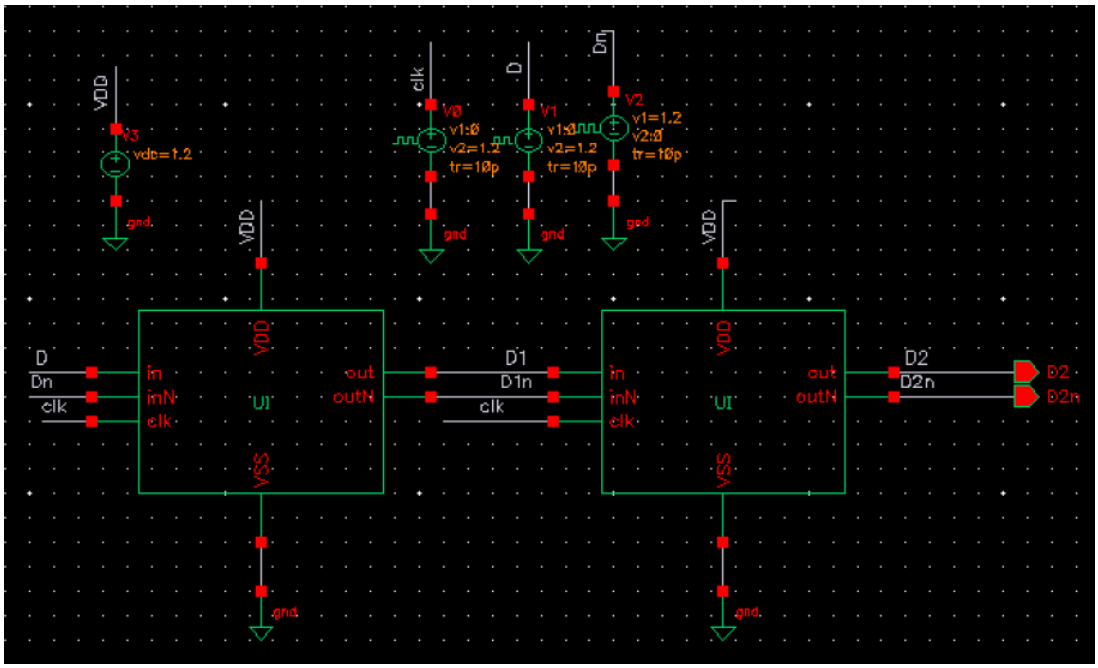

Unit delay cell Testbench Plot:

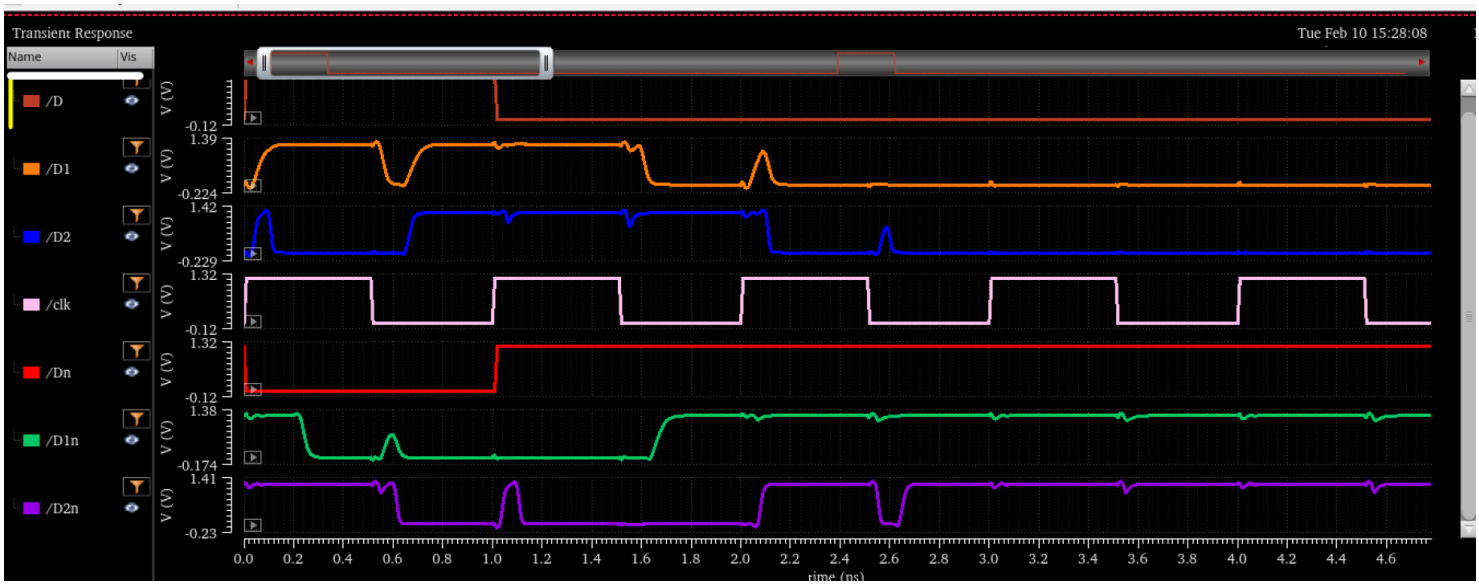

Transition Analysis-Time Domain Response of Channel with Pre-Emphasis Block

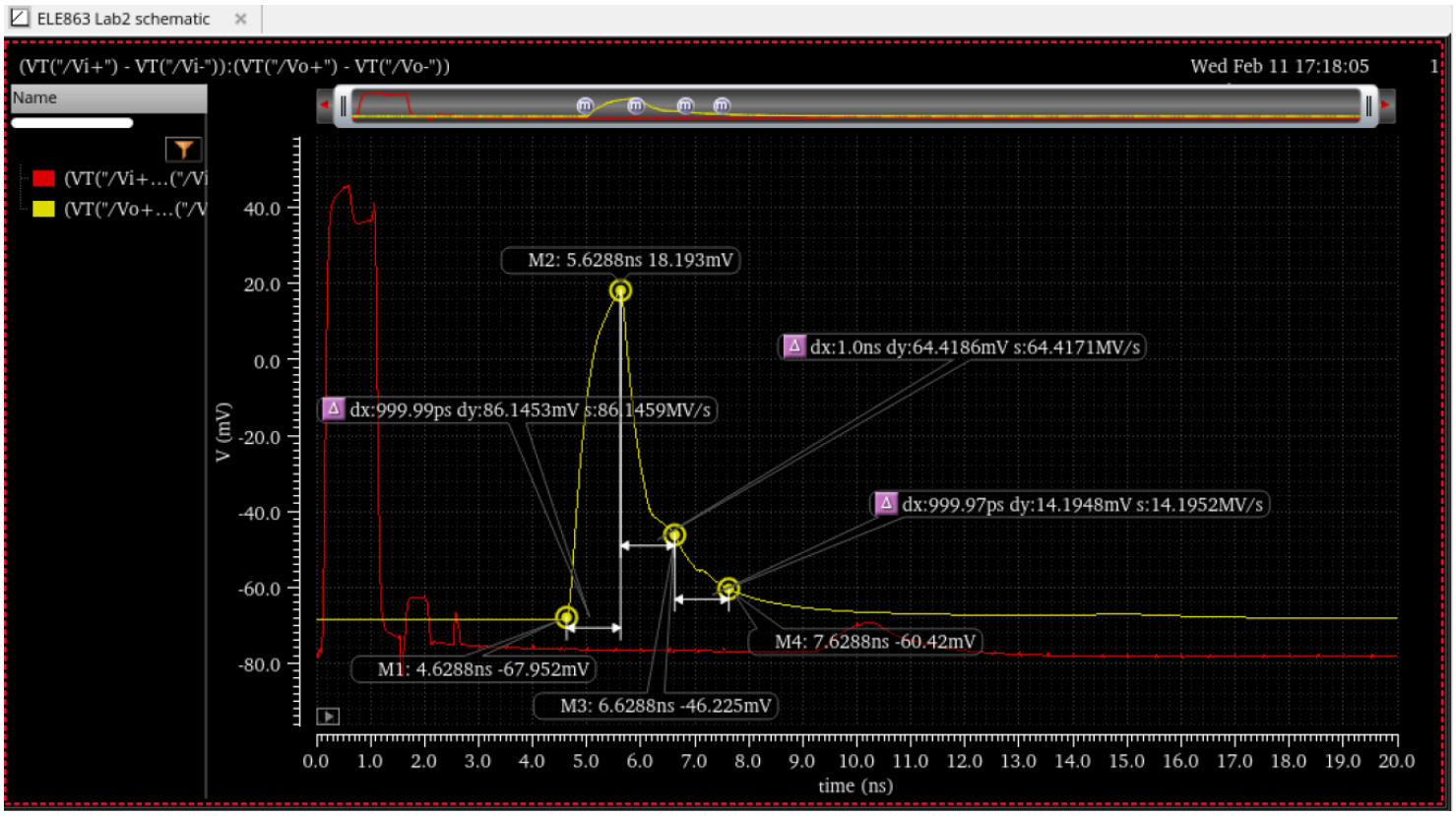

Had some funky noise on the input, tried to add buffers but couldn't seem to get rid of it.

Eye Diagram without preemphasis:

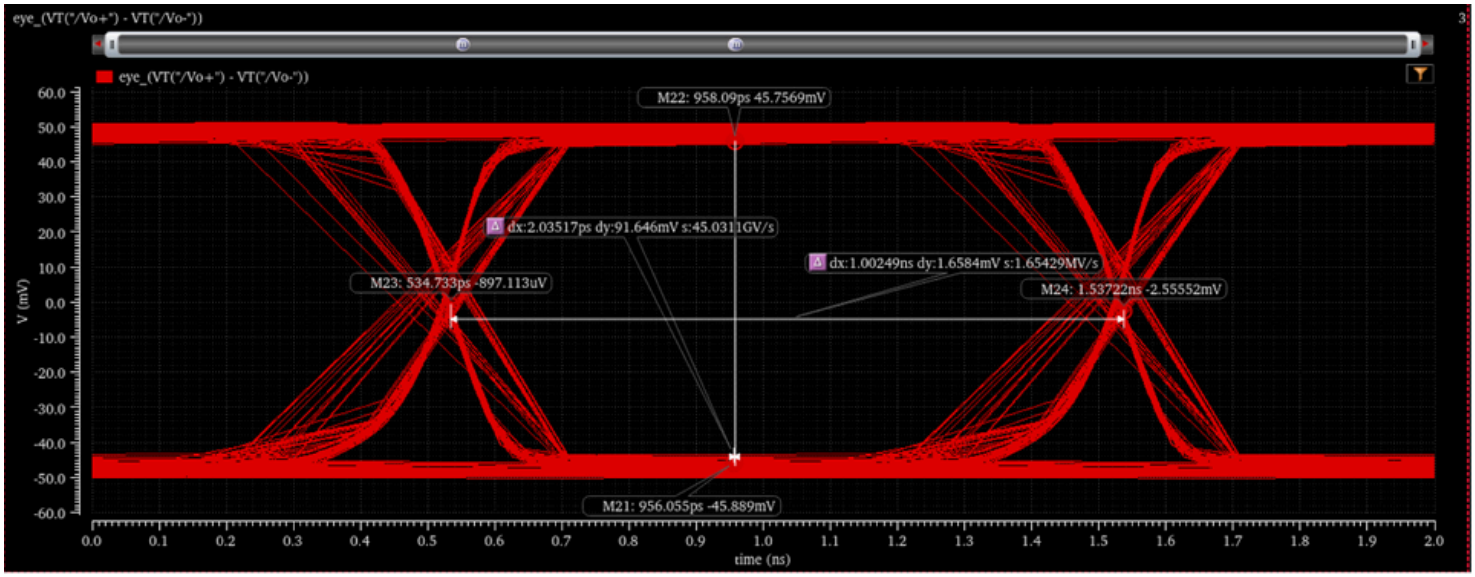

Eye Diagram with preemphasis:

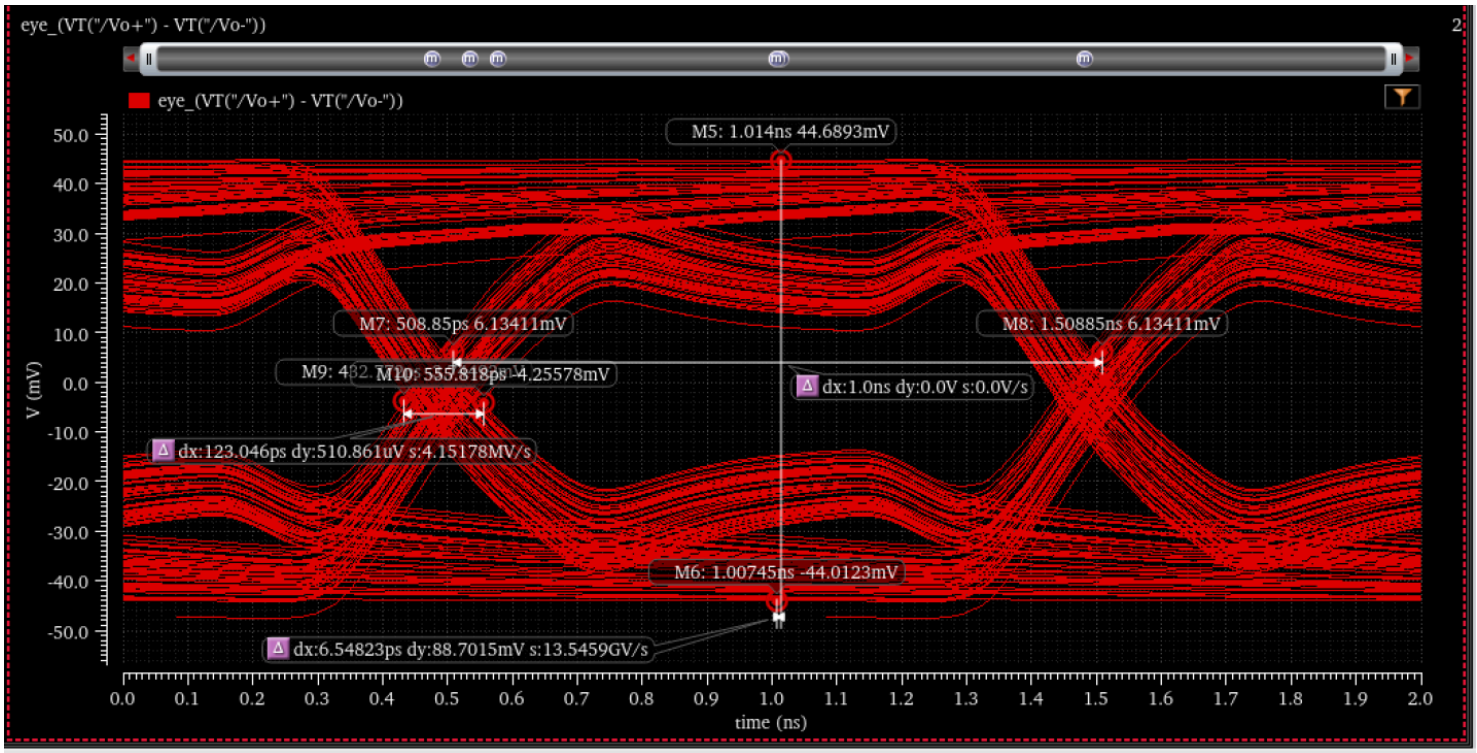

Main Circuit

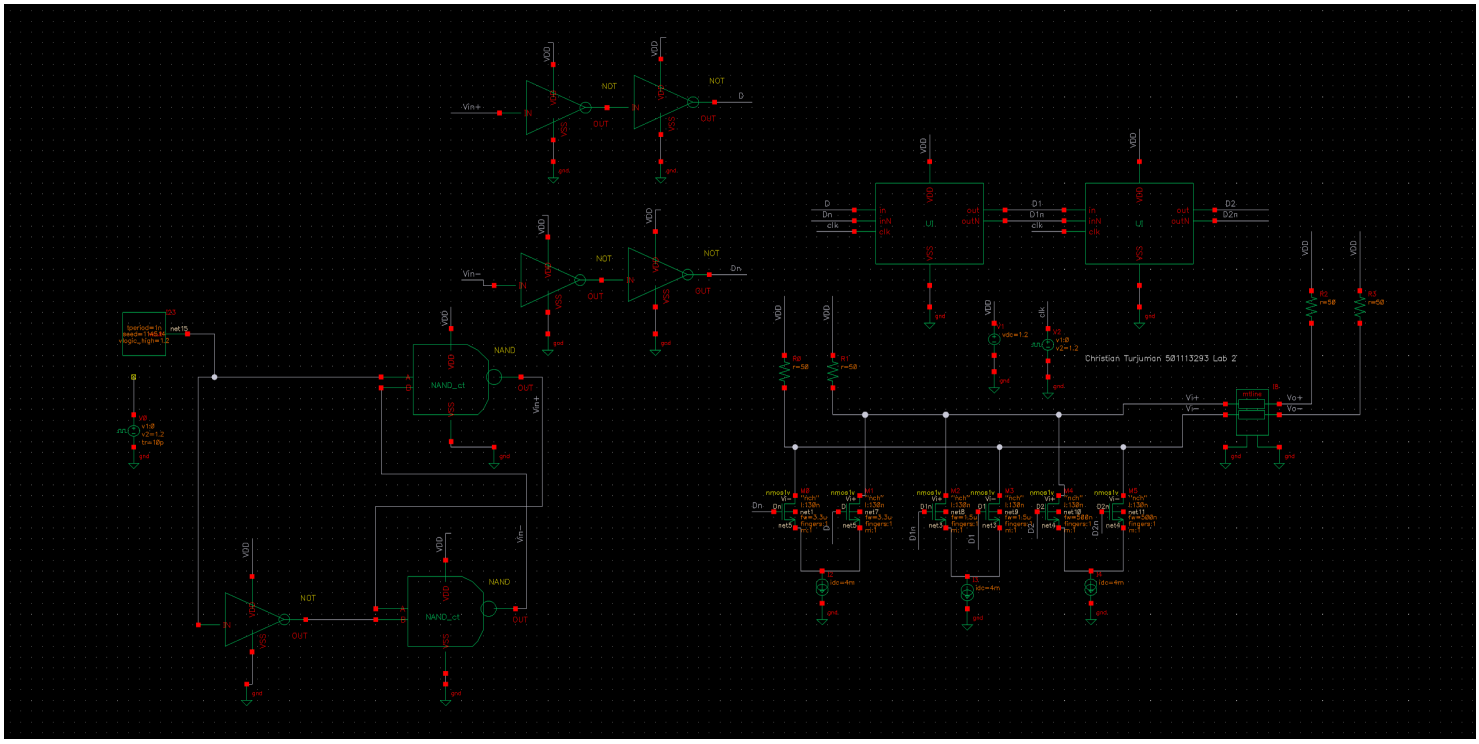

Power Consumption Graph:

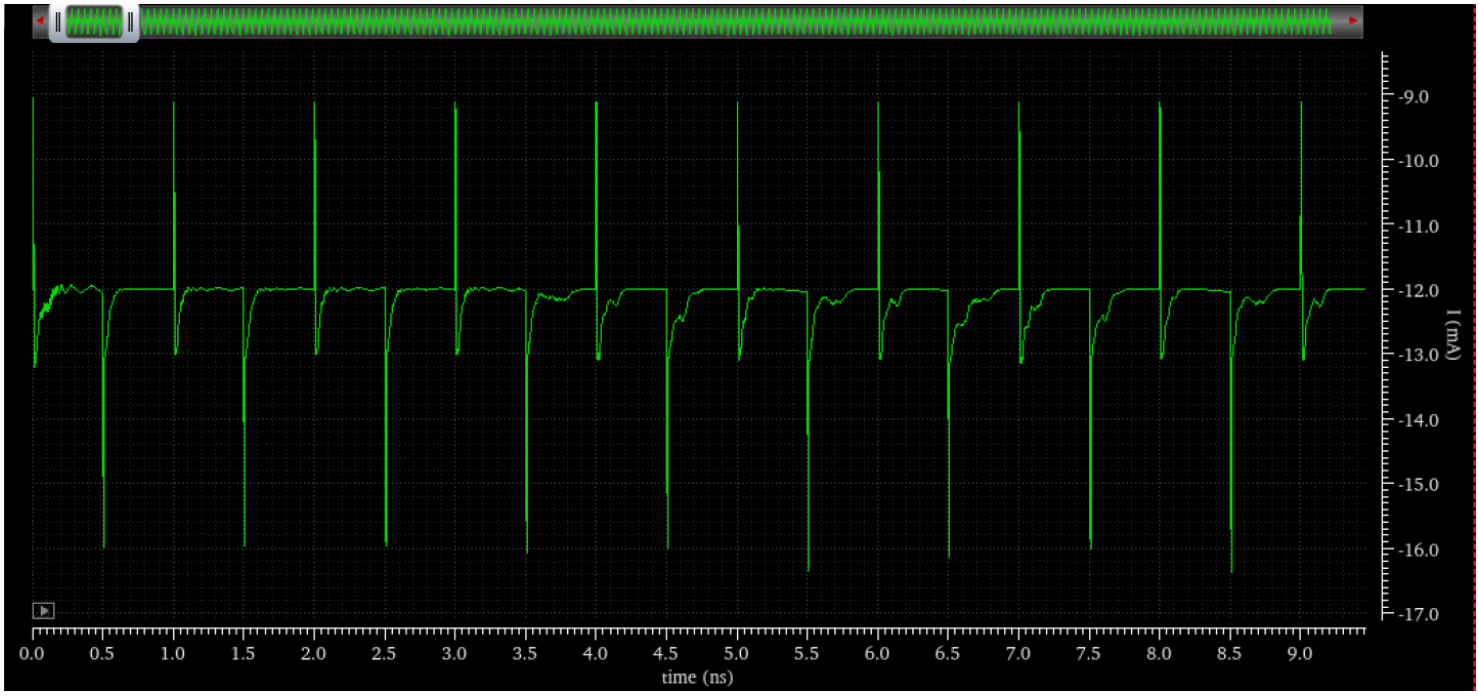

Conclusion:

To conclude, I somehow managed to get values that look pretty presentable and the lab was mostly successful. I definitely struggled with tap sizing and noise from my delay stages, and while I tried using buffers to clean it up, it didn't help much. This same issue occurred with my unit delay cells, as seen in the testbench graph, I got transient spikes when switching states. I can conclude that pre-emphasis does show that the current-mode transmitter is successfully driving the channel, though the presence of significant jitter in the eye diagram suggests that the pre-emphasis tap sizing wasn’t fully optimized to counteract the lossy channel. This resulted in a smaller eye diagram than I would’ve liked. I also used an ideal clock instead of the PLL(shown in the lab manual) as we were instructed.