Full adder schematic

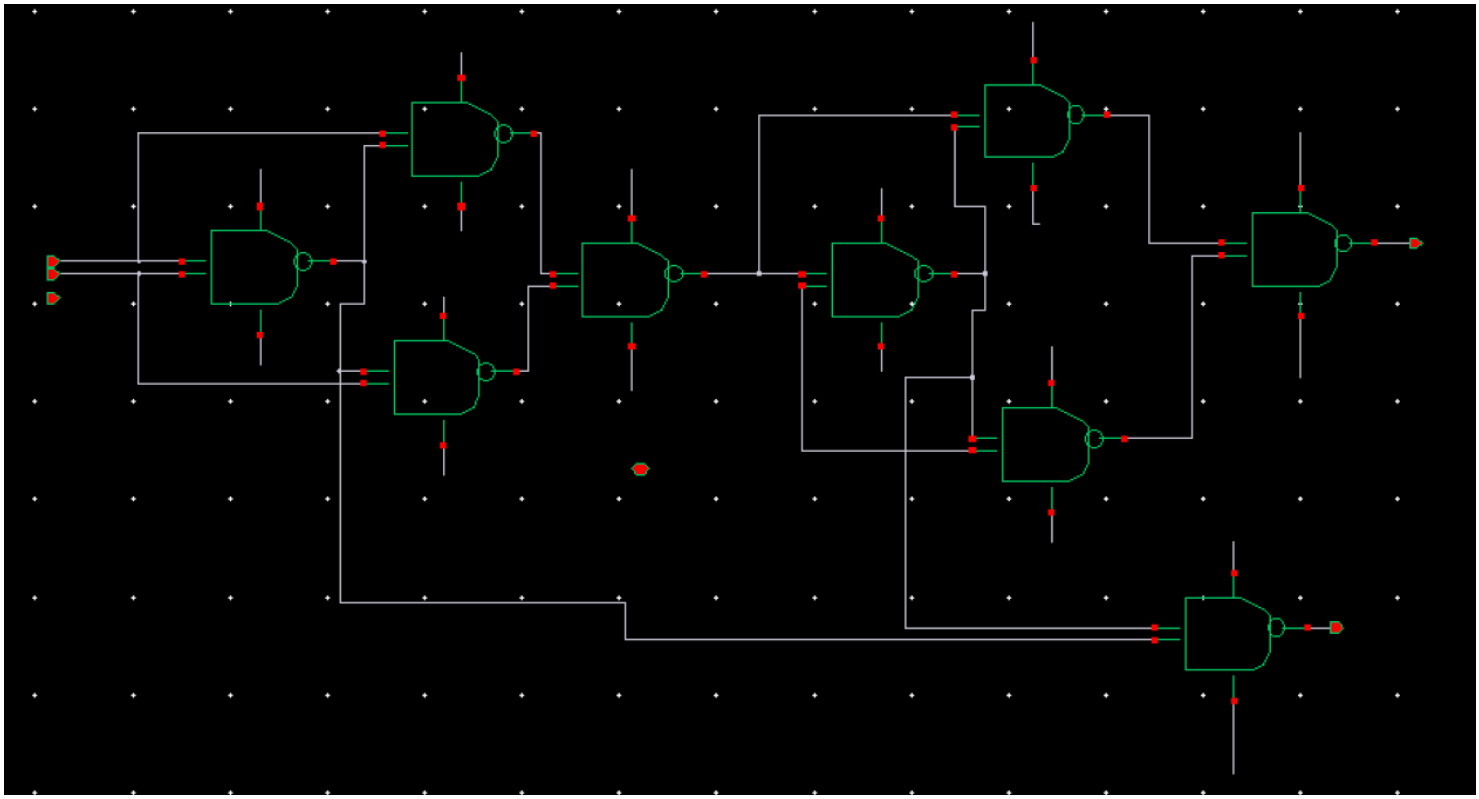

All NANDS sized 2/2

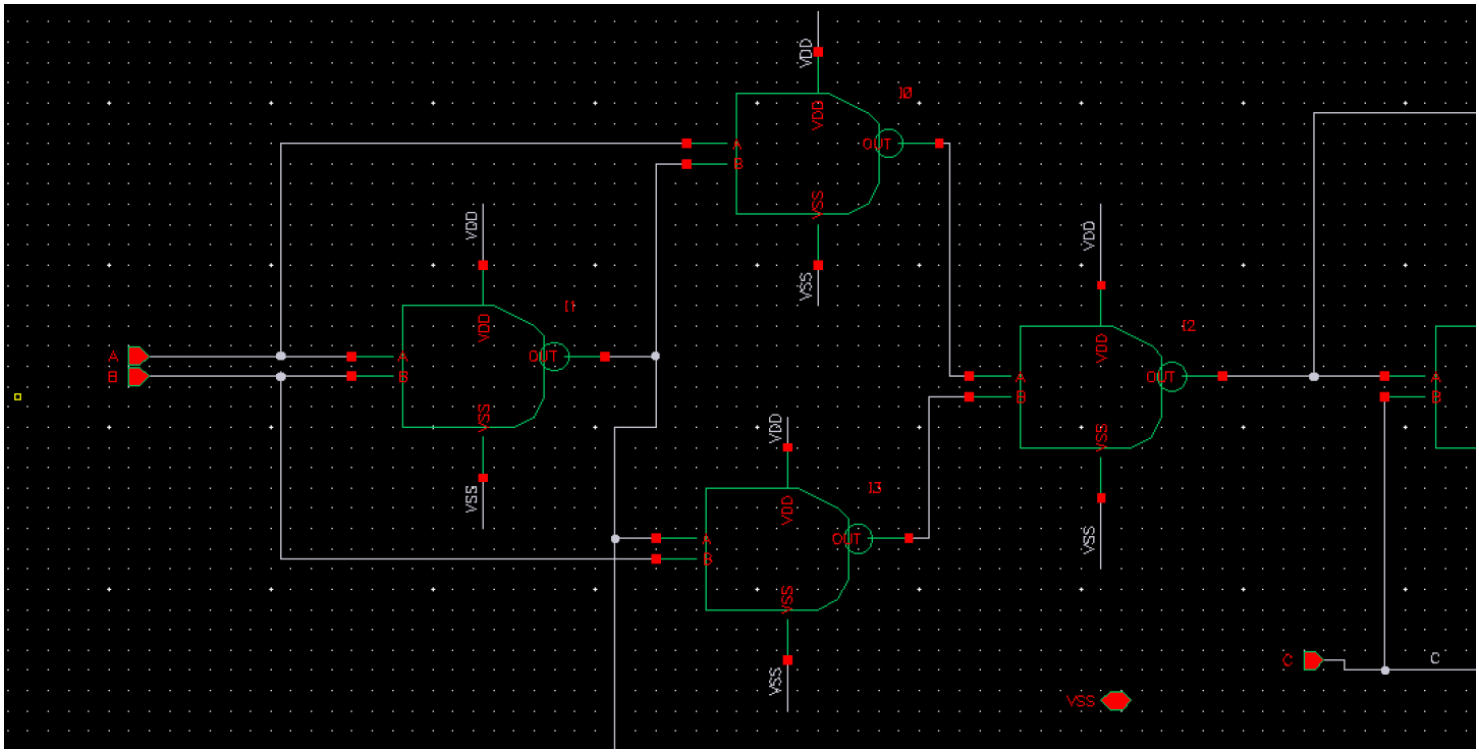

Pic with pin names

FA symbol

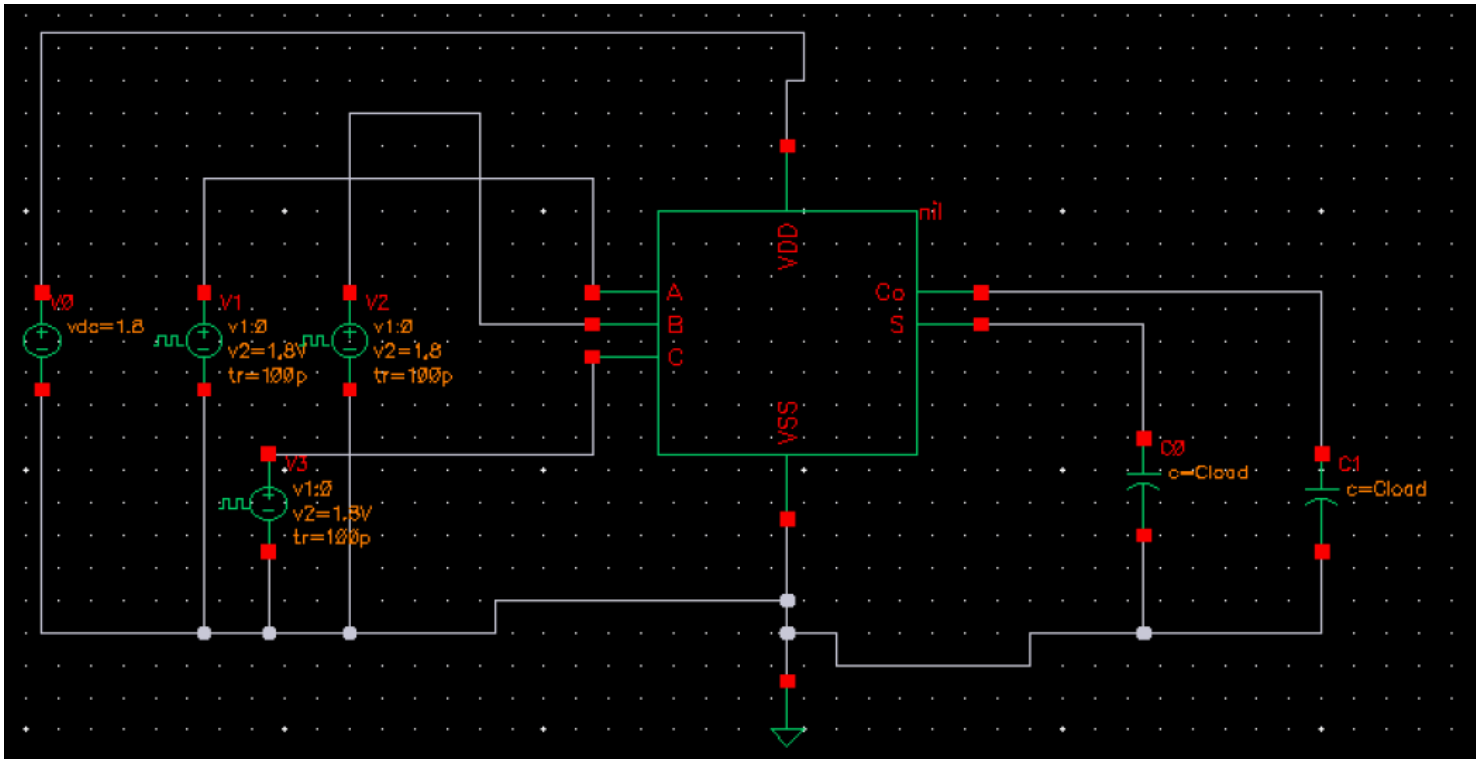

Schematic testbench:

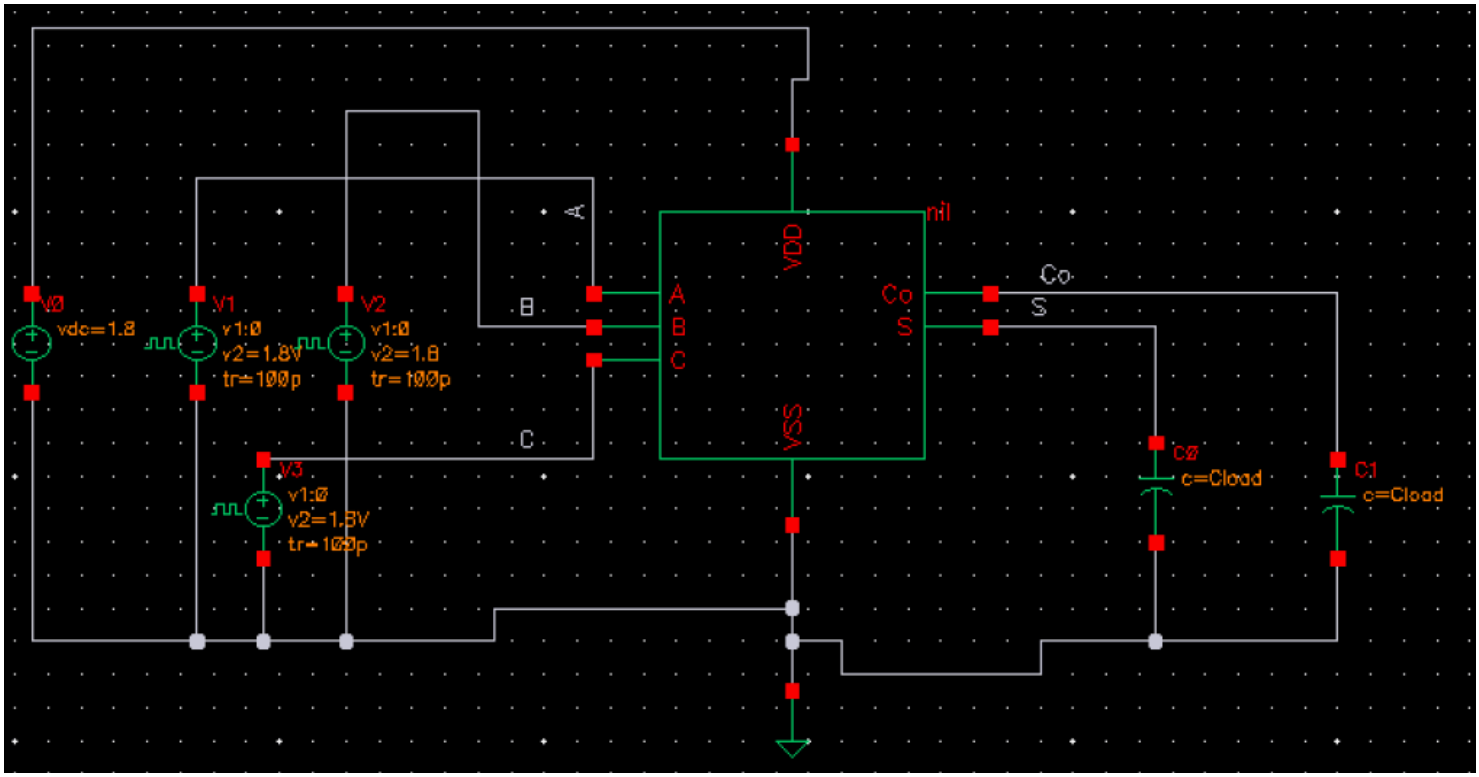

Schematic Testbench result:

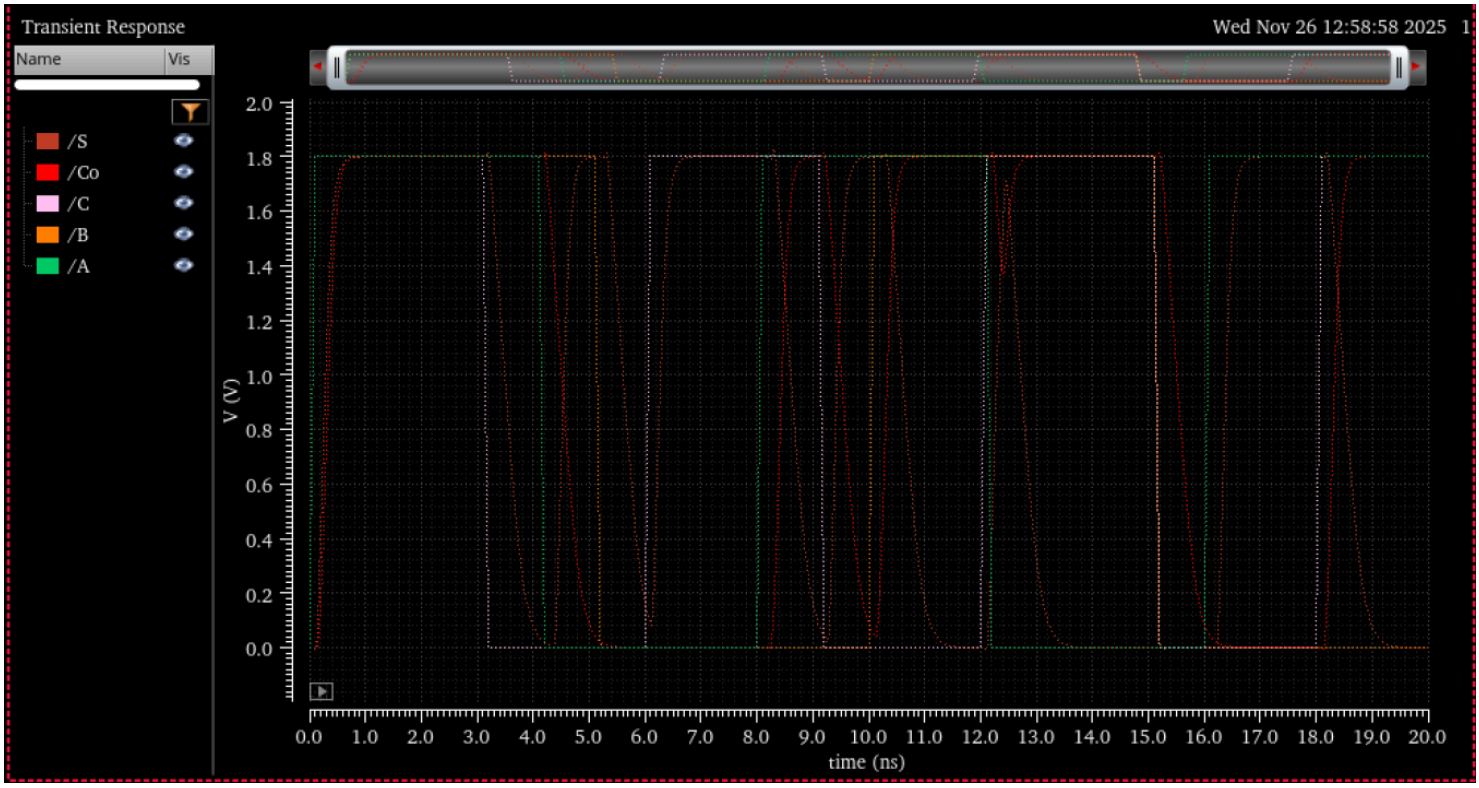

The Transient simulation results confirm functionality of the FA, looking at the initial time interval between 0ns and 3ns, all three input signals (Green, Orange, and Pink) are held at a logic high of 1.8V. Also, both the Sum (Brown) and Carry-out (Red) signals are driven high, correctly representing the binary sum of 1+1+1=3. As the simulation goes into the 3-4ns, input C drops to logic low while A and B remain high; the circuit responds immediately by dropping the Sum bit to logic low while maintaining the Carry-out high, which shows a sum of 2.

Full adder Layout (NAND)

Sized 2/2

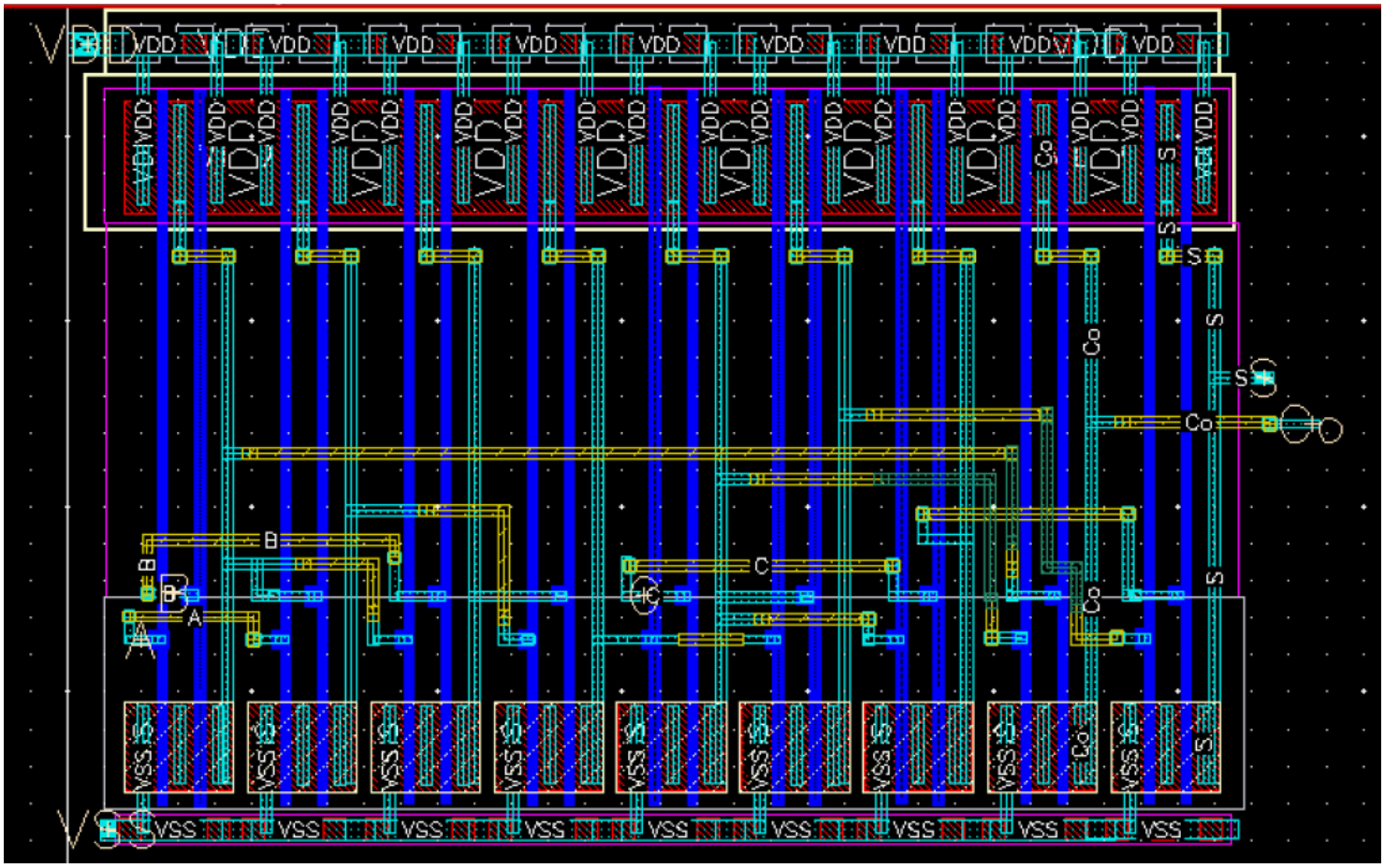

Pull down network:

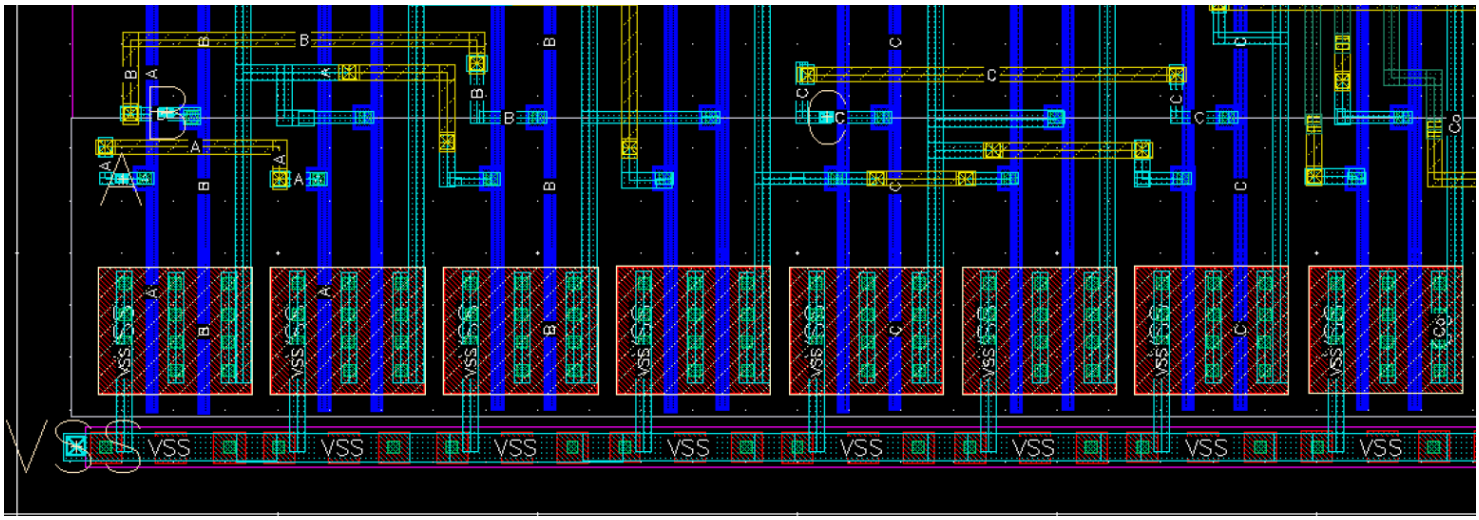

Pull up network:

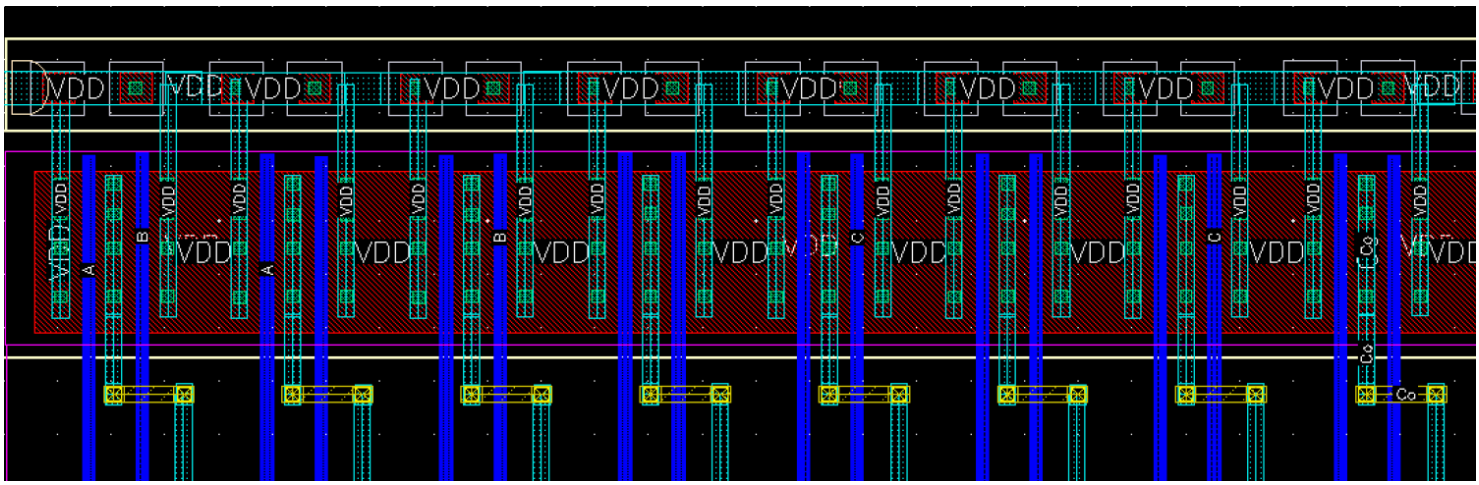

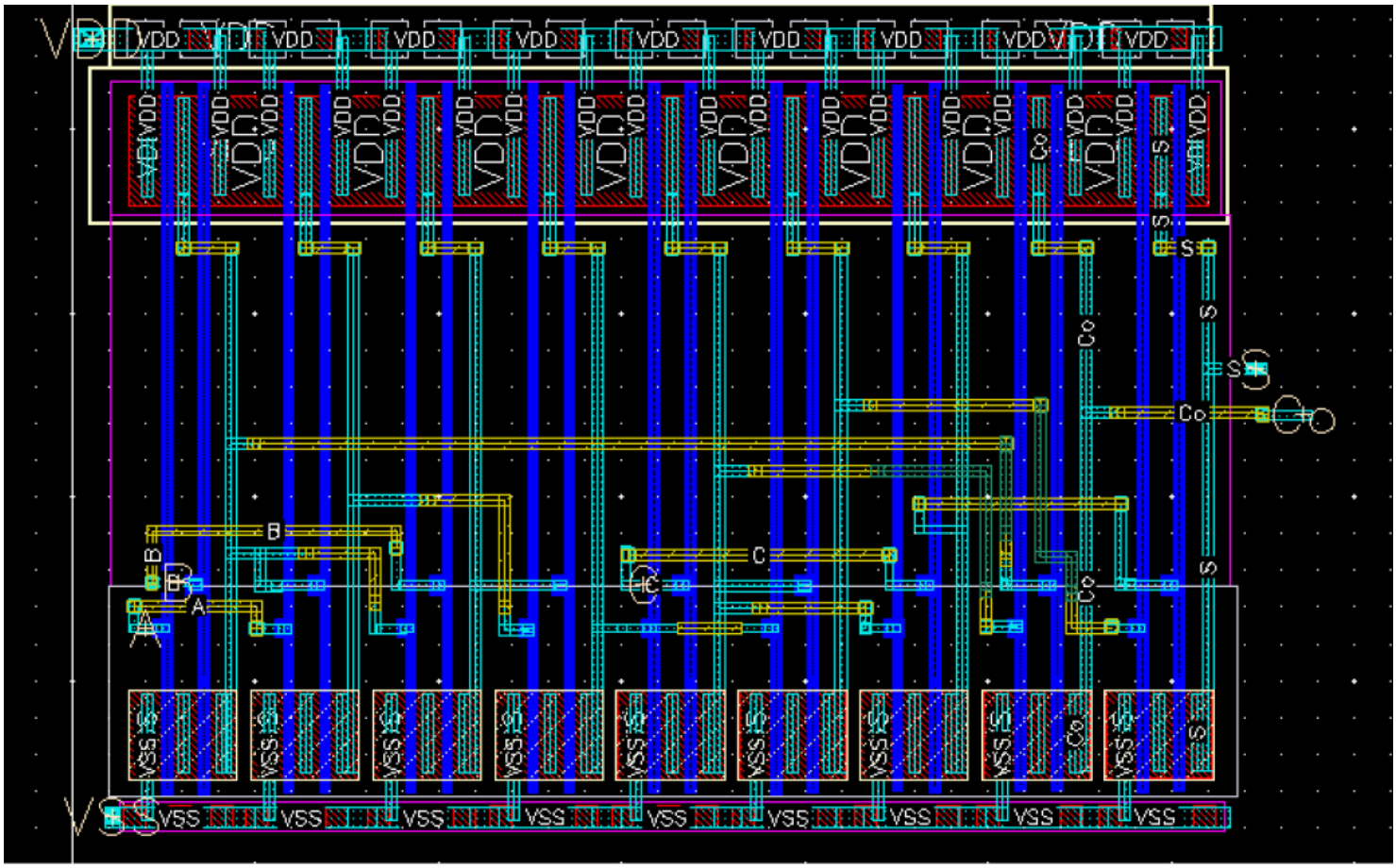

The layout of NAND goes from left to right, numbered 1-9 as shown below

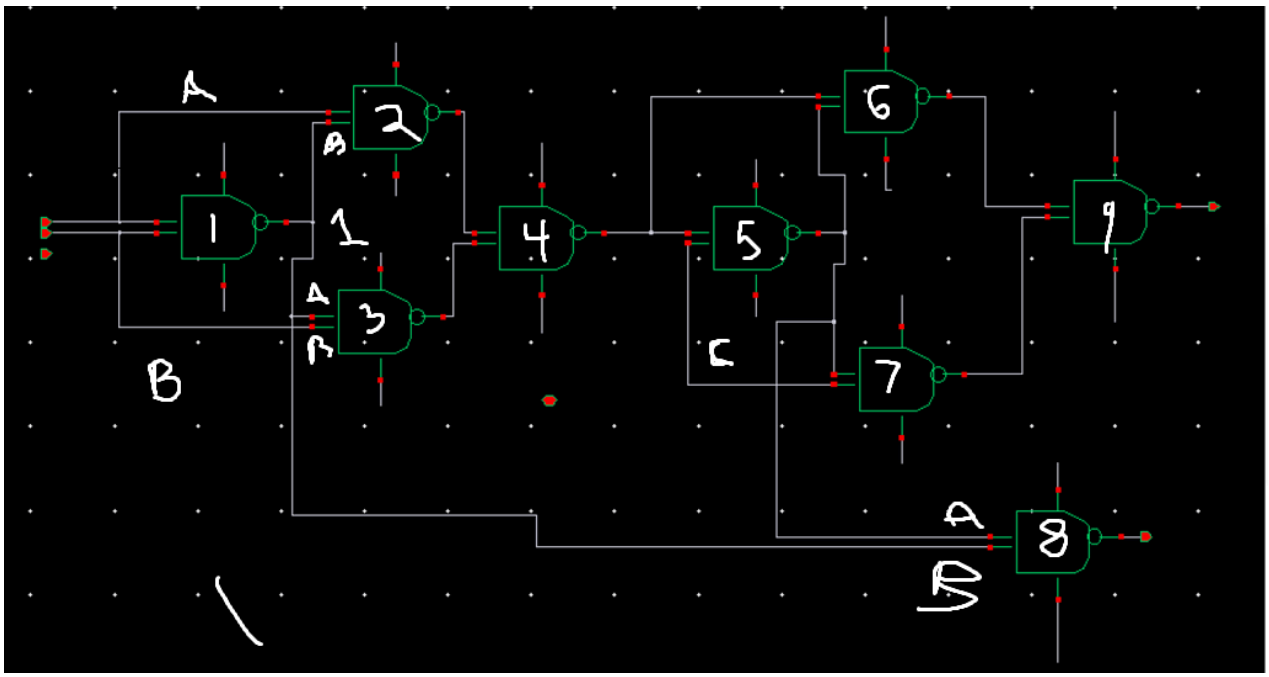
A
B
1
2
3
4
5
6
7
8
9
C

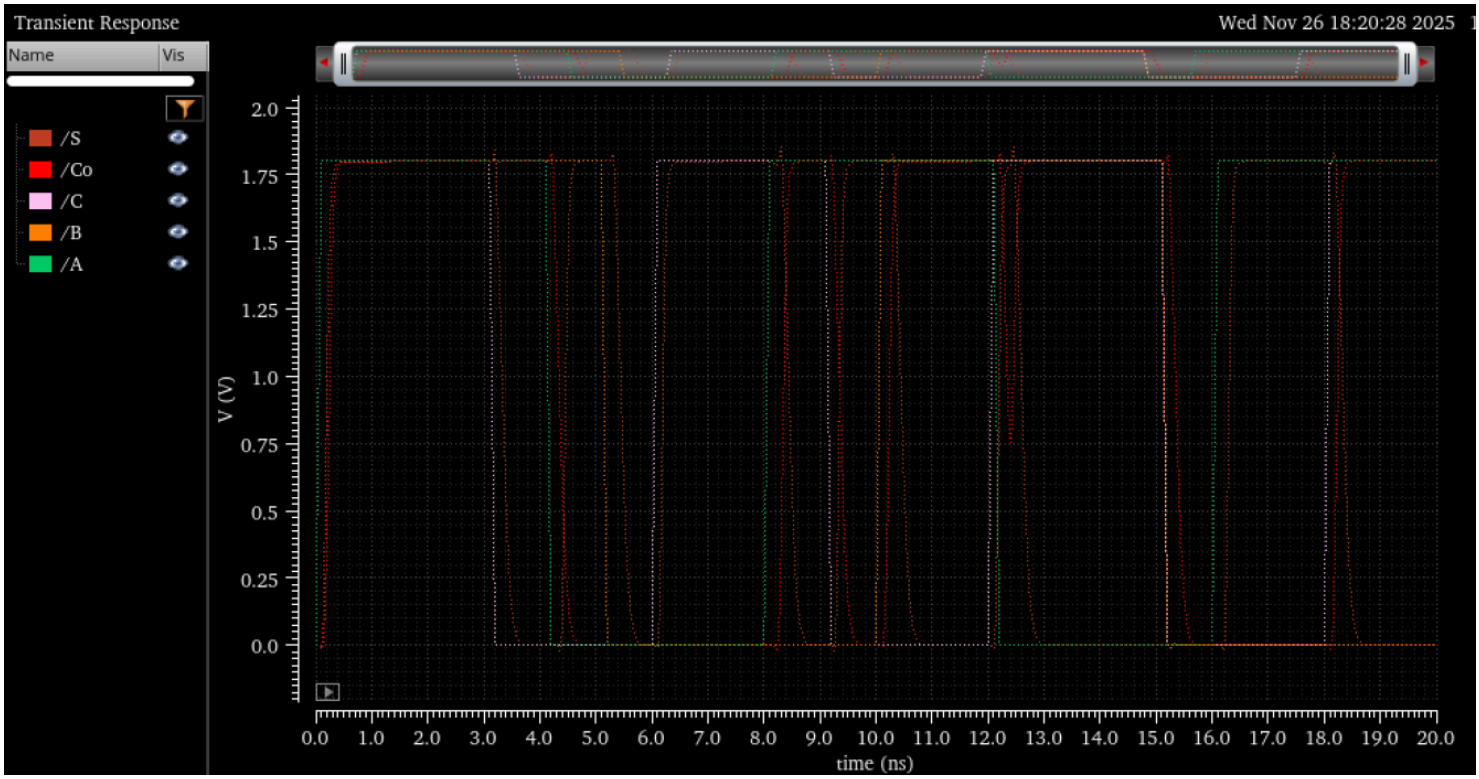
Transient Response
Wed Nov 26 18:20:28 2025
Name
Vis
/S
/Co
/C
/B
/A
V (V)
2.0
1.75
1.5
1.25
1.0
0.75
0.5
0.25
0.0
0.0 1.0 2.0 3.0 4.0 5.0 6.0 7.0 8.0 9.0 10.0 11.0 12.0 13.0 14.0 15.0 16.0 17.0 18.0 19.0 20.0
time (ns)