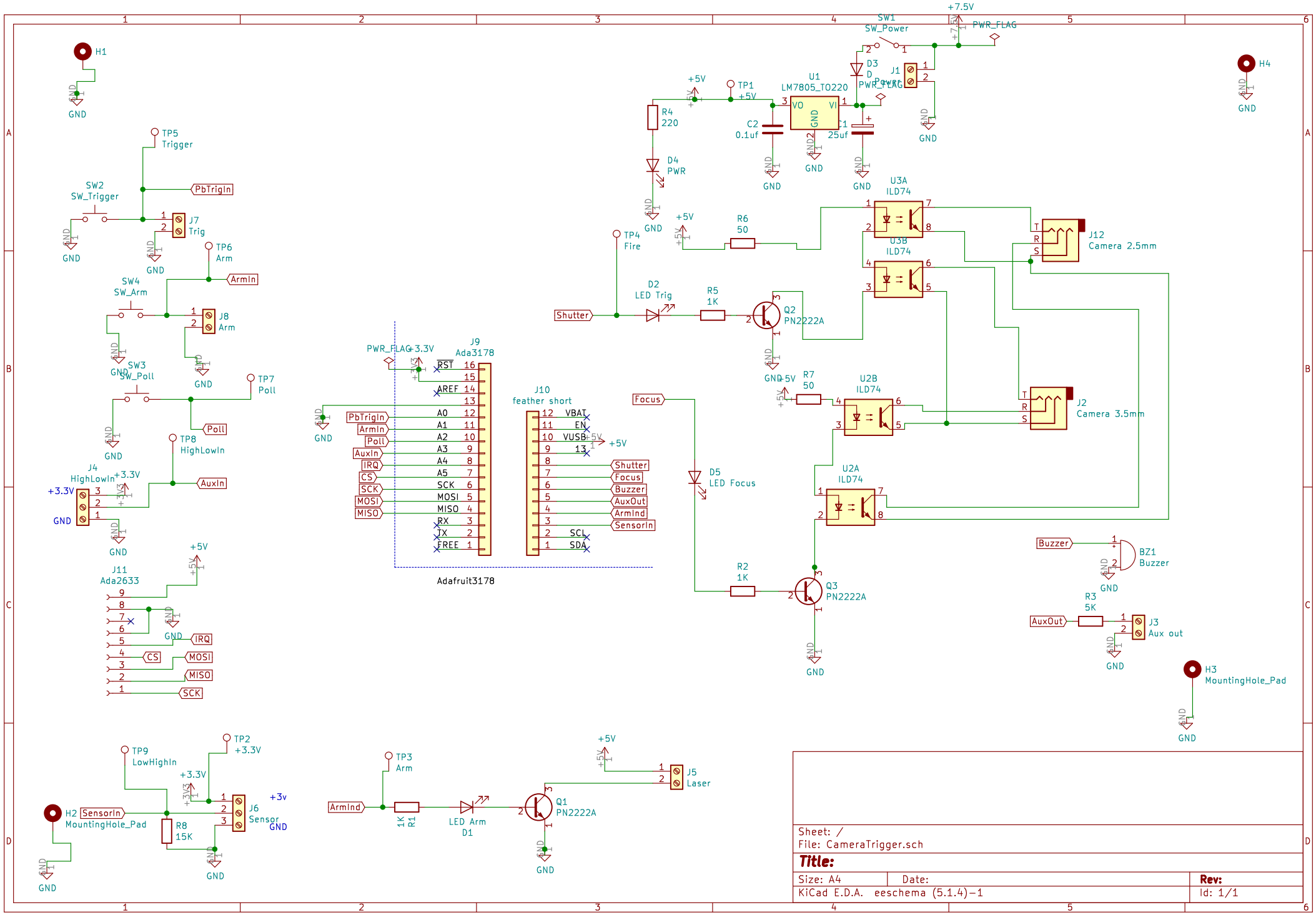

Sheet: /
File: CameraTrigger.sch

Title:

Size: A4	Date:	**Rev:**
KiCad E.D.A. eeschema (5.1.4)-1		Id: 1/1