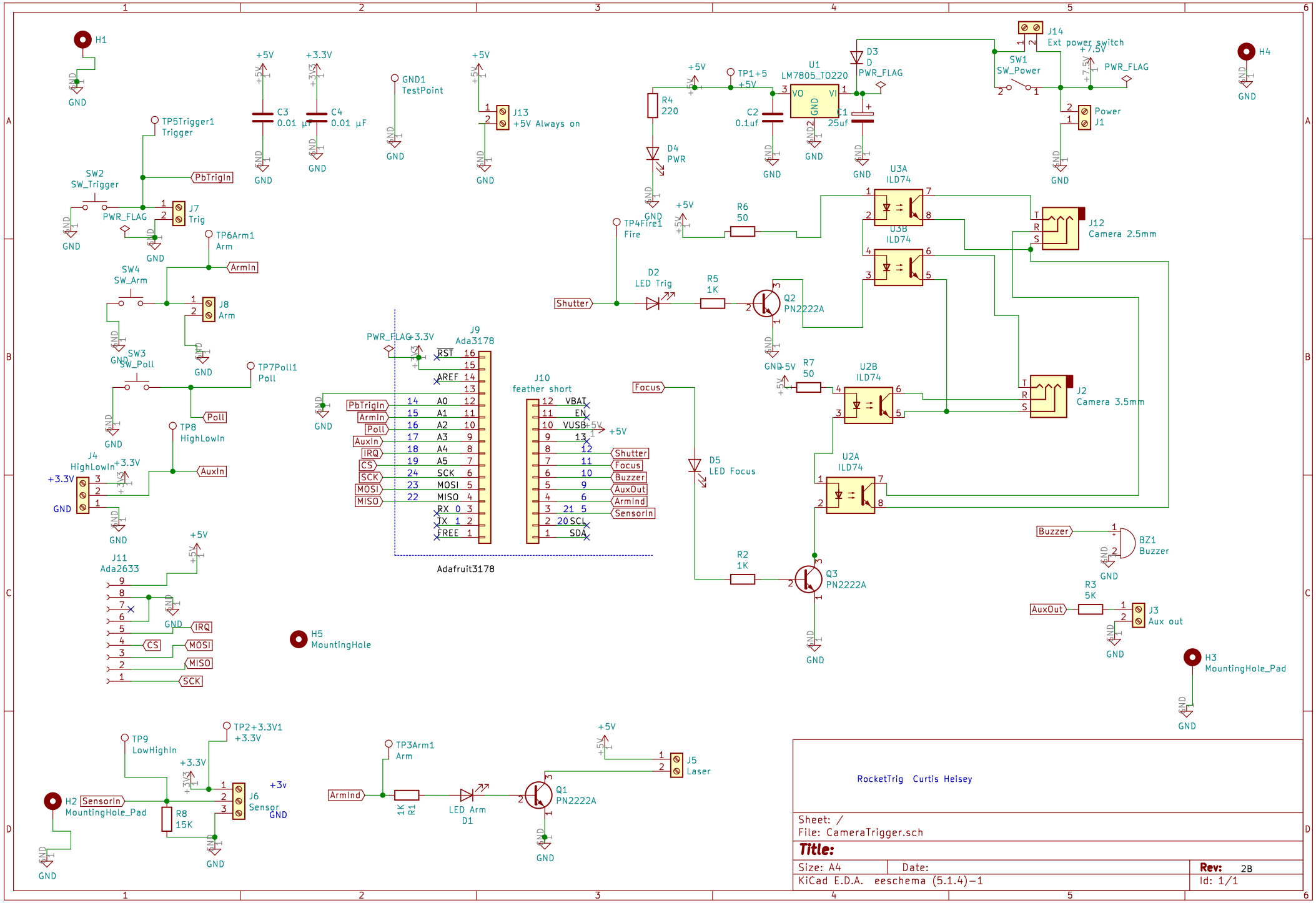
H1
GND
+5V
+3.3V
C3
0.01 µF
C4
0.01 µF
GND1
TestPoint
J13
+5V Always on
TP5Trigger1
Trigger
SW2
SW_Trigger
PbTrigIn
PWR_FLAG
J7
Trig
TP6Arm1
Arm
ArmIn
SW4
SW_Arm
J8
Arm
SW3
SW_Poll
TP7Poll1
Poll
Poll
TP8
HighLowIn
J4
HighLowIn
AuxIn
J11
Ada2633
IRQ
CS
MOSI
MISO
SCK
H5
MountingHole
J9
Ada3178
RST
AREF
A0
A1
A2
A3
A4
A5
SCK
MOSI
MISO
RX 0
TX 1
FREE
J10
feather short
VBAT
EN
VUSB
13
12
11
10
9
6
5
SCL
SDA
Shutter
Focus
Buzzer
AuxOut
ArmInd
SensorIn
Adafruit3178
TP9
LowHighIn
TP2+3.3V1
+3.3V
H2
SensorIn
MountingHole_Pad
R8
15K
J6
Sensor
+3v
TP3Arm1
Arm
ArmInd
1K
R1
LED Arm
D1
Q1
PN2222A
J5
Laser
R4
220
D4
PWR
TP1+5
+5V
C2
0.1uf
U1
LM7805_TO220
VO
VI
GND
C1
25uf
D3
D
PWR_FLAG
J14
Ext power switch
SW1
SW_Power
+7.5V
Power
J1
H4
TP4Fire1
Fire
R6
50
U3A
ILD74
U3B
ILD74
J12
Camera 2.5mm
D2
LED Trig
R5
1K
Q2
PN2222A
R7
50
U2B
ILD74
J2
Camera 3.5mm
D5
LED Focus
U2A
ILD74
R2
1K
Q3
PN2222A
BZ1
Buzzer
R3
5K
J3
Aux out
H3
MountingHole_Pad
RocketTrig Curtis Heisey
Sheet: /
File: CameraTrigger.sch
Title:
Size: A4
Date:
Rev: 2B
KiCad E.D.A. eeschema (5.1.4)-1
Id: 1/1