Nearest Neighbor Classifiers over Incomplete Information: From Certain Answers to Certain Predictions *

Bojan Karlaš*,†, Peng Li*,‡, Renzhi Wu‡, Nezihe Merve Gürel†, Xu Chu‡, Wentao Wu§, Ce Zhang†
†ETH Zurich, ‡Georgia Institute of Technology, §Microsoft Research
†{bojan.karlas, nezihe.guerel, ce.zhang}@inf.ethz.ch, ‡{pengli@,renzhiwu@ xu.chu@cc.}gatech.edu,
§wentao.wu@microsoft.com

ABSTRACT

Machine learning (ML) applications have been thriving recently, largely attributed to the increasing availability of data. However, inconsistency and incomplete information are ubiquitous in real-world datasets, and their impact on ML applications remains elusive. In this paper, we present a formal study of this impact by extending the notion of *Certain Answers for Codd tables*, which has been explored by the database research community for decades, into the field of machine learning. Specifically, we focus on classification problems and propose the notion of *"Certain Predictions" (CP)* — a test data example can be *certainly predicted (CP'ed)* if *all* possible classifiers trained on top of all possible worlds induced by the incompleteness of data would yield the *same* prediction. We study two fundamental CP queries: (Q1) *checking query* that determines whether a data example can be CP'ed; and (Q2) *counting query* that computes the number of classifiers that support a particular prediction (i.e., label). Given that general solutions to CP queries are, not surprisingly, hard without assumption over the type of classifier, we further present a case study in the context of nearest neighbor (NN) classifiers, where efficient solutions to CP queries can be developed — we show that it is possible to answer both queries in *linear or polynomial time* over *exponentially* many possible worlds. We demonstrate one example use case of CP in the important application of "data cleaning for machine learning (DC for ML)." We show that our proposed CPClean approach built based on CP can often significantly outperform existing techniques, particularly on datasets with systematic missing values. For example, on 5 datasets with systematic missingness, CPClean (with early termination) closes 100% gap on average by cleaning 36% of dirty data on average, while the best automatic cleaning approach BoostClean can only close 14% gap on average.

PVLDB Reference Format:
Bojan Karlaš*,†, Peng Li*,‡, Renzhi Wu‡, Nezihe Merve Gürel†, Xu Chu‡, Wentao Wu§, Ce Zhang† . Nearest Neighbor Classifiers over Incomplete Information: From Certain Answers to Certain Predictions. PVLDB, 14(1): XXX-XXX, 2020.
doi:XX.XX/XXX.XX

*The first two authors contribute equally to this paper and are listed alphabetically.

This work is licensed under the Creative Commons BY-NC-ND 4.0 International License. Visit https://creativecommons.org/licenses/by-nc-nd/4.0/ to view a copy of this license. For any use beyond those covered by this license, obtain permission by emailing info@vldb.org. Copyright is held by the owner/author(s). Publication rights licensed to the VLDB Endowment.
Proceedings of the VLDB Endowment, Vol. 14, No. 1 ISSN 2150-8097.
doi:XX.XX/XXX.XX

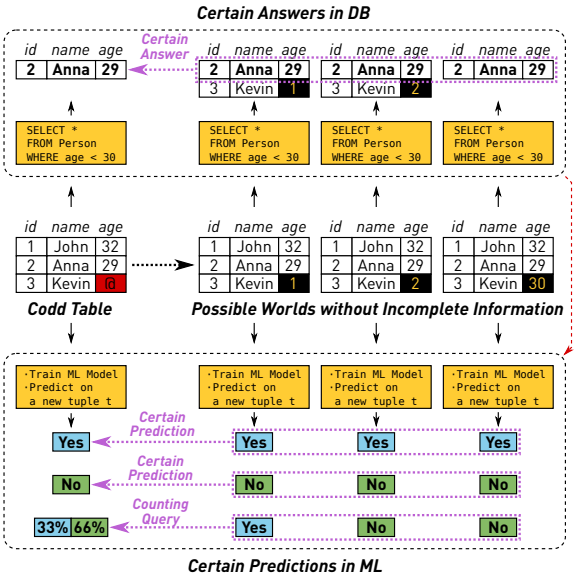

Figure 1: An illustration of the relationship between *certain answers* and *certain predictions*.

1 INTRODUCTION

Building high-quality Machine learning (ML) applications often hinges on the availability of high-quality data. However, due to noisy inputs from manual data curation or inevitable errors from automatic data collection/generation programs, in reality, data is unfortunately seldom clean. Inconsistency and incompleteness are ubiquitous in real-world datasets, and therefore can have an impact on ML applications trained on top of them. In this paper, we focus on the question: *Can we reason about the impact of data incompleteness on the quality of ML models trained over it?*

Figure 1 illustrates one dataset with incomplete information. In this example, we have the incomplete dataset D with one missing cell (we will focus on cases in which there are *many* cells with incomplete information) — the age of Kevin is not known and therefore is set as `NULL` (@). Given an ML training algorithm $\mathcal{A}$, we can train an ML model over D, $\mathcal{A}_D$, and given a clean test example t, we can get the prediction of this ML model $\mathcal{A}_D(t)$. The focus of this paper is to understand *how much impact the incomplete information (@) has on the prediction* $\mathcal{A}_D(t)$. This question is not only of theoretical interest but can also have interesting practical implications — for example, if we know that, for a large enough number of samples of t, the incomplete information (@) does not have an impact on $\mathcal{A}_D(t)$ at all, spending the effort of cleaning or

acquiring this specific piece of missing information will not change the quality of downstream ML models.

Relational Queries over Incomplete Information. This paper is inspired by the *algorithmic* and *theoretical* foundations of running *relational queries over incomplete information* [2]. In traditional database theory, there are multiple ways of representing incomplete information, starting from the Codd table, or the conditional table (c-table), all the way to the recently studied probabilistic conditional table (pc-table) [36]. Over each of these representations of incomplete information, one can define the corresponding semantics of a relational query. In this paper, we focus on the weak representation system built upon the Codd table, as illustrated in Figure 1. Given a Codd table T with constants and n variables over domain $\mathcal{D}_v$ (each variable only appears once and represents the incomplete information at the corresponding cell), it represents $|\mathcal{D}_v|^n$ many *possible worlds* $rep(T)$, and a query $\mathtt{Q}$ over T can be defined as returning the *certain answers* that *always* appear in the answer of $\mathtt{Q}$ over each possible world:

$$sure(\mathtt{Q}, T) = \cap\{\mathtt{Q}(I) | I \in rep(T)\}.$$

Another line of work with similar spirit is *consistent query answering*, which was first introduced in the seminal work by Arenas, Bertossi, and Chomicki [5]. Specifically, given an inconsistent database instance D, it defines a set of repairs $\mathcal{R}_D$, each of which is a consistent database instance. Given a query $\mathtt{Q}$, a tuple t is a *consistent answer* to $\mathtt{Q}$ if and only if t appears in *all answers* of $\mathtt{Q}$ evaluated on every consistent instance $D' \in \mathcal{R}_D$.

Both lines of work lead to a similar way of thinking in an effort to reason about data processing over incomplete information, i.e., *to reason about certain/consistent answers over all possible instantiations of incompleteness and uncertainty.*

Learning Over Incomplete Information: Certain Predictions (CP). The traditional database view provides us a powerful tool to reason about the impact of data incompleteness on downstream operations. In this paper, we take a natural step and extend this to machine learning (ML) — given a Codd table T, its $|\mathcal{D}_v|^n$ many possible worlds $rep(T)$, and an ML classifier $\mathcal{A}$, one could train one ML model $\mathcal{A}_I$ for each possible world $I \in rep(T)$. Given a test example t, we say that t can be *certainly predicted (CP'ed)* if $\forall I \in rep(T)$, $\mathcal{A}_I(t)$ always yields the same class label, as illustrated in Figure 1. This notion of certain prediction (CP) offers a canonical view of the impact from training classifiers on top of incomplete data. Specificlly, we consider the following two CP queries:

- **(Q1) Checking Query** — Given a test data example, determine whether it can be CP'ed or not;
- **(Q2) Counting Query** — Given a test data example that *cannot* be CP'ed, for each possible prediction, compute the number of classifiers that *support* this prediction.

Roadmap of This Paper. This paper contains two integral components built around these two types of queries.

- First, we notice that these queries provide a principled method to reason about *data cleaning for machine learning — intuitively, the notion of CP provides us a way to measure the relative importance of different variables in the Codd table to the downstream classification accuracy.* Inspired by this, we study the efficacy of CP in the imporant application of "data cleaning for machine learning (DC for ML)" [21, 22]. Based on the CP framework, we develop a novel algorithm CPClean that prioritizes manual cleaning efforts.
- The CPClean framework, depsite of being a principled solution, requires us to evaluate these CP queries efficiently. However, when no assumptions are made about the classifier, Q1 and Q2 are, not surprisingly, hard. Thus, a second component of this work is to develop efficient solutions to both Q1 and Q2 for a specific family of classifiers.

In this paper, we made novel contributions on both aspects, which together provide a principled data cleaning framework. In the following, we discuss these aspects.

Efficient CP Algorithm for Nearest Neighbor Classifiers. We first study efficient algorithms to answer both CP queries, which is indispensable to enable any practical data cleaning framework built upon the notion of certain prediction. We focus on K-nearest neighbor (KNN) classifier, one of the most popular classifiers used in practice. Surprisingly, we show that, *both CP queries can be answered in polynomial time, in spite of there being exponentially many possible worlds*! Moreover, these algorithms can be made very efficient. For example, given a Codd table with N rows and at most M possible versions for rows with missing values, we show that answering both queries only take $O\left(N \cdot M \cdot (\log(N \cdot M) + K \cdot \log N)\right)$. For Q1 in the binary classification case, we can even do $O(N \cdot M)$! This makes it possible to efficiently answer both queries for the KNN classifier, a result that is both *new* and *technically non-trivial.*

Discussion: Relationship with answering KNN queries over probabilistic databases. As we will see later, our result can be used to evaluate a KNN classifier over a tuple-independent database, in its standard semantics [3, 4, 20]. Thus we hope to draw the reader's attention to an interesting line of work of evaluating KNN *queries* over a probabilistic database in which the user wants the system to return the probability of a given (in our setting, training) tuple that is in the top-K list of a query. Despite the similarity of the naming and the underlying data model, we focus on a different problem in this paper as we care about the result of a KNN *classifier* instead of a KNN *query*. Our algorithm is very different and heavily relies on the structure of the classifier.

Applications to Data Cleaning for Machine Learning. The above result is not only of theoretical interest, but also has an interesting empirical implication. Based on the CP framework, we develop a novel algorithm CPClean that prioritizes manual cleaning efforts given a dirty dataset. Data cleaning (DC) is often an important prerequisite step in the entire pipeline of an ML application. Unfortunately, most existing work considers DC as a standalone exercise without considering its impact on downstream ML applications (exceptions include exciting seminal work such as ActiveClean [22] and BoostClean [21]). Studies have shown that such *oblivious* data cleaning may not necessarily improve downstream ML models' performance [24]; worse yet, it can sometimes even degrade ML models' performance due to Simpson's paradox [22]. We propose a novel "DC for ML" framework built on top of certain predictions. In the following discussion, we assume a standard setting for building ML models, where we are given a training set D_{train} and a validation set D_{val} that are drawn independently from the same underlying data distribution. We assume that D_{train} may contain missing information whereas D_{val} is complete.

The intuition of our framework is as follows. When the validation set is sufficiently large, if Q1 returns `true` for every data example t in D_{val}, then with high probability cleaning D_{train} will not have impact on the model accuracy. In this case we can immediately finish without any human cleaning effort. Otherwise, some data examples cannot be CP'ed, and our goal is then to clean the data such that all these examples can be CP'ed. *Why is this sufficient*? The key observation is that, as long as a tuple t can be CP'ed, the prediction will remain the same regardless of further cleaning efforts. That is, even if we clean the whole D_{train}, the prediction for t (made by the classifier using the *clean* D_{train}) will remain the same, simply because the final clean version is one of the possible worlds of D_{train} that has been included in the definition of CP!

To *minimize* the number of tuples in D_{train} being cleaned until all data examples in D_{val} are CP'ed, we further propose a novel optimization algorithm based on the principle of *sequential information maximization* [9], exploiting the counts in Q2 for each example in D_{val} that cannot be certainly predicted. The optimization algorithm is *iterative*: Each time we pick the next example in D_{train} (to be cleaned) based on its potential impact on the "degree of certainty" of D_{train} after cleaning (see Section 4.1 for more details).

Summary of Contributions. In summary, this paper makes the following contributions:

- **(C1)** We propose *certain predictions*, as well as its two fundamental queries/primitives (checking and counting), as a tool to study the impact of incomplete data on training ML models.
- **(C2)** We propose efficient solutions to the two fundamental CP queries for nearest neighbor classifiers, despite the hardness of these two queries in general.
- **(C3)** We propose a novel "DC for ML" approach, CPClean, built on top of the CP primitives that significantly outperforms existing work, particularly on datasets with systematic missing values. For example, on 5 datasets with systematic missingness, CPClean (with early termination) closes 100% gap on average by cleaning 36% of dirty data on average, while the best automatic cleaning approach BoostClean can only close 14% gap on average.

Limitations and Moving Forward. Just like the study of consistent query answering that focuses on specific subfamilies of queries, in this paper we have focused on a specific type of classifier, namely the KNN classifier, in the CP framework. We made this decision because of two reasons. First, KNN classifier is a popular family of classifiers that are used commonly in practice. Second, it has a simple structure that is often used as a "proxy model" for computationally challenging learning tasks [15, 26, 34]. In the future, it is interesting to extend our study to a more diverse range of classifiers — either to develop efficient exact algorithms or to explore efficient approximation algorithms. With respect to this direction, there are interesting connections between CP and the recently studied notion of *expected prediction* and *probabilistic circuits* [16–18]. In terms of approximation algorithms, we believe that the notion of influence functions [19, 32] could be a promising technique to be applied for more complex classifiers. Another limitation of our efficient algorithms to answer Q1 and Q2 is to deal with large candidate set or even infinite candidate set induced by large discrete domains and continuous domains. For candidate set of a continuous domain, if we are aware of an analytical form of the distribution, we can also design efficient algorithms for a variant of KNN classifiers [41]. It is interesting future direction to understand how to more efficiently accommodate these scenarios. Moreover, in this work, we assumed a uniform prior (thus the "count" in Q2) for uncertainty. We believe that this can be extended to more complex priors, similar to [41].

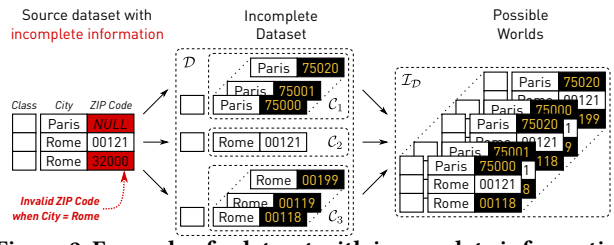

Figure 2: Example of a dataset with incomplete information, its representation as an *incomplete dataset*, and the induced set of *possible worlds*.

Paper Organization. This paper is organized as follows. We formalize the notion of certain predictions, as well as the two primitive queries Q1 and Q2 (Section 2). We then propose efficient algorithms in the context of nearest neighbor classifiers (Section 3). We follow up by proposing our novel "DC for ML" framework exploiting CP (Section 4). We report evaluation results in Section 5, summarize related work in Section 6, and conclude the paper in Section 7.

2 CERTAIN PREDICTION (CP)

In this section, we describe the *certain prediction* (CP) framework, which is a natural extension of the notion of *certain answer* for query processing over Codd tables [2] to machine learning. We first describe our data model and then introduce two CP queries.

Data Model. We focus on standard supervised ML settings:

(1) Feature Space $\mathcal{X}$: without loss of generality, we assume that every data example is drawn from a domain $\mathcal{X} = \mathbb{D}^d$, i.e., a d dimensional space of data type $\mathbb{D}$.
(2) Label Space $\mathcal{Y}$: we assume that each data example can be classified into one of the labels in $\mathcal{Y}$.
(3) Training Set $D_{train} \subseteq \mathcal{X} \times \mathcal{Y}$ is drawn from an *unknown* distribution $\mathcal{P}_{\mathcal{X},\mathcal{Y}}$.
(4) Test Set $D_{test} \subseteq \mathcal{X}$ (Validation Set D_{val}) is drawn from the marginal distribution $\mathcal{P}_{\mathcal{X}}$ of the joint distribution $\mathcal{P}_{\mathcal{X},\mathcal{Y}}$.
(5) Training Algorithm $\mathcal{A}$: A training algorithm $\mathcal{A}$ is a functional that maps a given training set D_{train} to a function $\mathcal{A}_{D_{train}} : \mathcal{X} \mapsto \mathcal{Y}$. Given a test example $t \in D_{test}$, $\mathcal{A}_{D_{train}}(t)$ returns the prediction of the trained classifier on the test example t.

Incomplete Information in the Training Set In this paper, we focus on the case in which there is incomplete information in the training set. We define an *incomplete training set* as follows.

Our definition of an incomplete training set is very similar to a block tuple-independent probabilistic database [36]. However, we do assume that there is no uncertainty on the label and we do not have access to the probability distribution of each tuple.

Definition 2.1 (Incomplete Dataset). An *incomplete dataset*

$$\mathcal{D} = \{(C_i, y_i) : i = 1, ..., N\}$$

is a finite set of N pairs where each $C_i = \{x_{i,1}, x_{i,2}, ...\} \subset \mathcal{X}$ is a finite number of possible feature vectors of the i-th data example and each $y_i \in \mathcal{Y}$ is its corresponding class label.

According to the semantics of $\mathcal{D}$, the i-th data example can take any of the values from its corresponding *candidate set* C_i. The space of all possible ways to assign values to all data points in $\mathcal{D}$ is captured by the notion of possible worlds. Similar to a block tuple-independent probabilistic database, an incomplete dataset can define a set of *possible worlds*, each of which is a dataset without incomplete information.

Definition 2.2 (Possible Worlds). Let $\mathcal{D} = \{(C_i, y_i) : i = 1, ..., N\}$ be an incomplete dataset. We define the set of possible worlds $\mathcal{I}_\mathcal{D}$, given the incomplete dataset $\mathcal{D}$, as

$$\mathcal{I}_\mathcal{D} = \left\{D = \{(x'_i, y'_i)\} : |D| = |\mathcal{D}| \wedge \forall i.\ x'_i \in C_i \wedge y'_i = y_i\right\}.$$

In other words, a *possible world* represents one complete dataset D that is generated from $\mathcal{D}$ by replacing every candidate set C_i with one of its candidates $x_j \in C_i$. The set of all distinct datasets that we can generate in this way is referred to as the *set of possible worlds*. If we assume that $\mathcal{D}$ has N data points and the size of each C_i is bounded by M, we can see $|\mathcal{I}_\mathcal{D}| = O(M^N)$.

Figure 2 provides an example of these concepts. As we can see, our definition of incomplete dataset can represent both possible values for missing cells and possible repairs for cells that are considered to be potentially incorrect.

Connections to Data Cleaning. In this paper, we use data cleaning as one application to illustrate the practical implication of the CP framework. In this setting, each possible world can be thought of as one possible *data repair* of the dirty/incomplete data. These repairs can be generated in an arbitrary way, possibly depending on the entire dataset [29], or even some external domain knowledge [10]. Attribute-level data repairs could also be generated independently and merged together with Cartesian products.

We will further apply the assumption that any given incomplete dataset $\mathcal{D}$ is *valid*. That is, for every data point i, we assume that there exists a *true value* x_i^* that is unknown to us, but is nevertheless included in the candidate set C_i. This is a commonly used assumption in data cleaning [14], where automatic cleaning algorithms are used to generate a set of candidate repairs, and humans are then asked to pick one from the given set. We call $D^*_\mathcal{D}$ the *true possible world*, which contains the true value for each tuple. When $\mathcal{D}$ is clear from the context, we will also write D^*.

2.1 Certain Prediction (CP)

When we train an ML model over an incomplete dataset, we can define its semantics in a way that is very similar to how people define the semantics for data processing over probabilistic databases — we denote $\mathcal{A}_{D_i}$ as the classifier that was trained on the possible world $D_i \in \mathcal{I}_\mathcal{D}$. Given a test data point $t \in \mathcal{X}$, we say that it can be *certainly predicted* (CP'ed) if all classifiers trained on all different possible worlds agree on their predictions:

Definition 2.3 (Certain Prediction (CP)). Given an incomplete dataset $\mathcal{D}$ with its set of possible worlds $\mathcal{I}_\mathcal{D}$ and a data point $t \in \mathcal{X}$, we say that a label $y \in \mathcal{Y}$ can be *certainly predicted* with respect to a learning algorithm $\mathcal{A}$ if and only if

$$\forall D_i \in \mathcal{I}_\mathcal{D}, \mathcal{A}_{D_i}(t) = y.$$

Connections to Databases. The intuition behind this definition is rather natural from the perspective of database theory. In the context of Codd table, each `NULL` variable can take values in its domain, which in turn defines exponentially many possible worlds [2]. Checking whether a tuple is in the answer of some query `Q` is to check whether such a tuple is in the result of each possible world.

Two Primitive CP Queries. Given the notion of *certain prediction*, there are two natural queries that we can ask. The query $Q1$ represents a *decision problem* that checks if a given label can be predicted in *all* possible worlds. The query $Q2$ is an extension of that and represents a *counting problem* that returns the number of possible worlds that support each prediction outcome. Figure **??** illustrates both queries and we formally define them as follows.

Definition 2.4 (Q1: Checking). Given a data point $t \in \mathcal{X}$, an incomplete dataset $\mathcal{D}$ and a class label $y \in \mathcal{Y}$, we define a query that checks *if all possible world* permits y to be predicted:

$$Q1(\mathcal{D}, t, y) := \begin{cases} \texttt{true}, & \text{if } \forall D_i \in \mathcal{I}_\mathcal{D}, \mathcal{A}_{D_i}(t) = y; \\ \texttt{false}, & \text{otherwise.} \end{cases}$$

Definition 2.5 (Q2: Counting). Given a data point $t \in \mathcal{X}$, an incomplete dataset $\mathcal{D}$ and a class label $y \in \mathcal{Y}$, we define a query that returns the *number of possible worlds* that permit y to be predicted:

$$Q2(\mathcal{D}, t, y) := |\{D_i \in \mathcal{I}_\mathcal{D} : \mathcal{A}_{D_i}(T) = y\}|.$$

Computational Challenge. If we do not make any assumption about the learning algorithm $\mathcal{A}$, we have no way of determining the predicted label $y = \mathcal{A}_{D_i}(t)$ except for running the algorithm on the training dataset. Therefore, for a general classifier treated as a black box, answering both $Q1$ and $Q2$ requires us to apply a brute-force approach that iterates over each $D_i \in \mathcal{I}_\mathcal{D}$, produces $\mathcal{A}_{D_i}$, and predicts the label. Given an incomplete dataset with N data examples each of which has M clean candidates, the computational cost of this naive algorithm for both queries would thus be $O(M^N)$.

This is not surprising. However, as we will see later in this paper, for certain types of classifiers, such as K-Nearest Neighbor classifiers, we are able to design efficient algorithms for both queries.

Connections to Probabilistic Databases. Our definition of certain prediction has strong connection to the theory of probabilistic database [36] — in fact, Q2 can be seen as a natural definition of evaluating an ML classifier over a block tuple-independent probabilistic database with uniform prior.

Nevertheless, unlike traditional relational queries over a probabilistic database, our "query" is an ML model that has very different structure. As a result, despite the fact that we are inspired by many seminal works in probabilistic database [3, 4, 20], they are not applicable to our settings and we need to develop new techniques.

Connections to Data Cleaning. It is easy to see that, if $Q1$ returns `true` on a test example t, obtaining more information (by cleaning) for the original training set will not change the prediction on t at all! This is because the true possible world D^* is one of the possible worlds in $\mathcal{I}_\mathcal{D}$. Given a large enough test set, if Q_1 returns `true` for all test examples, cleaning the training set in this case might not improve the quality of ML models at all!

Of course, in practice, it is unlikely that all test examples can be CP'ed. In this more realistic case, Q_2 provides a "softer" way than Q_1 to measure the *degree of certainty/impact*. As we will see

K	$\lvert\mathcal{Y}\rvert$	Query	Alg.	Complexity in $O(-)$	Section
1	2	Q1/Q2	SS	$NM \log NM$	3.1.2
K	2	Q1	MM	NM	Full Version
K	$\lvert\mathcal{Y}\rvert$	Q1/Q2	SS	$NM(\log(NM) + K^2 \log N)$	Full Version

Figure 3: Summary of results (K and $|\mathcal{Y}|$ are constants).

later, we can use this as a principled proxy of the impact of data cleaning on downstream ML models, and design efficient algorithms to prioritize which uncertain cell to clean in the training set.

3 EFFICIENT SOLUTIONS FOR CP QUERIES

Given our definition of certain prediction, not surprisingly, both queries are hard if we do not assume any structure of the classifier. In this section, we focus on a specific classifier that is popularly used in practice, namely the K-Nearest Neighbor (KNN) classifier. As we will see, for a KNN classifier, we are able to answer both CP queries in *polynomial* time, even though we are reasoning over *exponentially* many possible worlds!

***K*-Nearest Neighbor Classifiers.** A textbook KNN classifier works in the following way: Given a training set $D = \{(x_i, y_i)\}$ and a test example t, we first calculate the similarity between t and each x_i: $s_i = \kappa(x_i, t)$. This similarity can be calculated using different kernel functions κ such as linear kernel, RBF kernel, etc. Given all these similarity scores $\{s_i\}$, we pick the top K training examples with the largest similarity score: $x_{\sigma_1}, ..., x_{\sigma_K}$ along with corresponding labels $\{y_{\sigma_i}\}_{i\in[K]}$. We then take the majority label among $\{y_{\sigma_i}\}_{i\in[K]}$ and return it as the prediction for the test example t.

Summary of Results. In this paper, we focus on designing efficient algorithms to support a KNN classifier for both CP queries. In general, all these results are based on two algorithms, namely SS (SortScan) and MM (MinMax). SS is a generic algorithm that can be used to answer both queries, while MM can only be used to answer $Q1$. However, on the other hand, MM permits lower complexity than SS when applicable. Figure 3 summarizes the result.

Structure of This Section. Due to space limitation, we focus on a specific case of the SS algorithm to illustrate the high-level ideas behind our approach, and leave other cases and algorithms to the full version of this work [1]. Specifically, in Section 3.1, We will explain a simplified version of the SS algorithm for the special case ($K = 1$, $|\mathcal{Y}| = 2$) in greater details as it conveys the intuition behind this algorithm. We leave the general form of the SS algorithm, the efficient divide-and-conquer version of the SS algorithm (SS-DC) and the MM algorithm to the full version [1].

3.1 SS Algorithm

We now describe the SS algorithm. The idea behind SS is that we can calculate the similarity between all candidates $\cup_i C_i$ in an incomplete dataset and a test example t. Without loss of generaility, assume that $|C_i| = M$, this leads to $N \times M$ similarity scores $s_{i,j}$. We can then sort and scan these similarity scores.

The core of the SS algorithm is a dynamic programming procedure. We will first describe a set of basic building blocks of this problem, and then introduce a simplified version of SS for the special case of $K = 1$ and $|\mathcal{Y}| = 2$, to explain the intuition of SS.

3.1.1 Two Building Blocks. In our problem, we can construct two building blocks efficiently. We start by articulating the settings

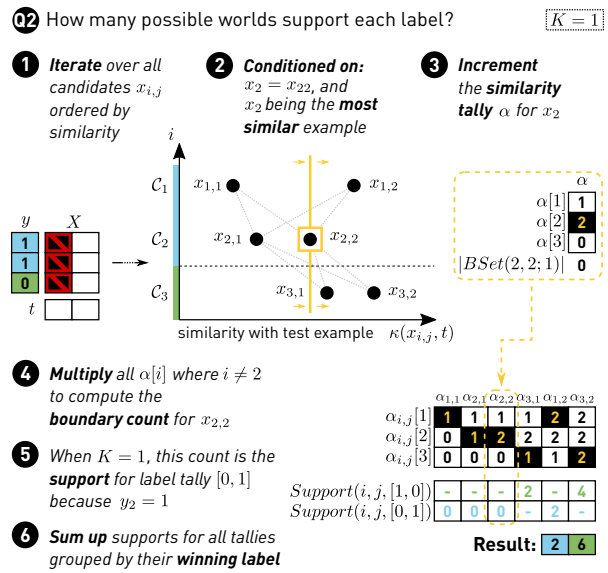

Figure 4: Illustration of SS when $K = 1$ for $Q2$.

precisely. In the next section, we will use these two building blocks for our SS algorithm.

Setup. We are given an incomplete dataset $\mathcal{D} = \{(C_i, y_i)\}$. Without loss of generality, we assume that each C_i only contains M elements, i.e., $|C_i| = M$. We call $C_i = \{x_{i,j}\}_{j\in[M]}$ the ith incomplete data example, and $x_{i,j}$ the jth candidate value for the ith incomplete data example. This defines M^N many possible worlds:

$$\mathcal{I}_{\mathcal{D}} = \{D = \{(x_i^D, y_i^D)\} : |D| = |\mathcal{D}| \wedge y_i^D = y_i \wedge x_i^D \in C_i\}.$$

We use $x_{i,j_{i,D}}$ to denote the candidate value for the ith data point in D. Given a test example t, we can calculate the similarity between each candidate value $x_{i,j}$ and t: $s_{i,j} = \kappa(x_{i,j}, t)$. We call these values *similarity candidates*. We assume that there are no ties in these similarities scores (we can always break a tie by favoring a smaller i and j or a pre-defined random order).

Furthermore, given a candidate value $x_{i,j}$, we count, for each candidate set, how many candidate values are less similar to the test example than $x_{i,j}$. This gives us what we call the *similarity tally* α. For each candidate set C_n, we have

$$\alpha_{i,j}[n] = \sum_{m=1}^{M} \mathbb{I}[s_{n,m} \leq s_{i,j}].$$

Example 3.1. In Figure 4 we can see an example of a similarity tally $\alpha_{2,2}$ with respect to the data point $x_{2,2}$. For i^{th} incomplete data example, it contains the number of candidate values $x_{i,j} \in C_i$ that have the similarity value no greater than $s_{2,2}$. Visually, in Figure 4, this represents all the candidates that lie left of the vertical yellow line. We can see that only one candidate from C_1, two candidates from C_2, and none of the candidates from C_3 satisfy this property. This gives us $\alpha_{2,2}[1] = 1$, $\alpha_{2,2}[2] = 2$, and $\alpha_{2,2}[3] = 0$.

KNN over Possible World D. Given one possible world D, running a KNN classifier to get the prediction for a test example t involves multiple stages. First, we obtain *Top-K Set*, the set of K examples in D that are in the K-nearest neighbor set $Top(K, D, t) \subseteq [N]$, which has the following property:

$$|Top(K, D, t)| = K,$$

$$\forall i, i' \in [N].\ i \in Top(K, D, t) \wedge i' \notin Top(K, D, t) \implies s_{i,j_{i,D}} > s_{i',j_{i',D}}.$$

Given the top-K set, we then tally the corresponding labels by counting how many examples in the top-K set support a given label. We call it the *label tally* γ^D:

$$\gamma^D \in \mathbb{N}^{|\mathcal{Y}|} : \gamma_l^D = \sum_{i \in Top(K,D,t)} \mathbb{I}[l = y_i].$$

Finally, we pick the label with the largest count:

$$y_D^* = \arg\max_l \gamma_l^D.$$

Example 3.2. For $K = 1$, the Top-K Set contains only one element x_i which is most similar to t. The label tally then is a $|\mathcal{Y}|$-dimensional binary vector with all elements being equal to zero except for the element corresponding to the label y_i being equal to one. Clearly, there are $|\mathcal{Y}|$ possible such label tally vectors.

Building Block 1: Boundary Set. The first building block answers the following question: *Out of all possible worlds that picked the value $x_{i,j}$ for C_i, how many of them have $x_{i,j}$ as the least similar item in the Top-K set?* We call all possible worlds that satisfy this condition the *Boundary Set* of $x_{i,j}$:

$$BSet(i, j; K) = \{D : j_{i,D} = j \wedge i \in Top(K, D, t) \wedge i \notin Top(K-1, D, t)\}.$$

We call the size of the boundary set the *Boundary Count.*

We can enumerate all $\binom{N}{(K-1)}$ possible configurations of the top-(K-1) set to compute the boundary count. Specifically, let $\mathcal{S}(K-1, [N])$ be all subsets of $[N]$ with size $K-1$. We have

$$|BSet(i, j; K)| = \sum_{\substack{S \in \mathcal{S}(K-1,[N]) \\ i \notin S}} \left(\prod_{n \notin S} \alpha_{i,j}[n] \right) \cdot \left(\prod_{n \in S} (M - \alpha_{i,j}[n]) \right).$$

The idea behind this is the following — we enumerate all possible settings of the top-(K-1) set: $\mathcal{S}(K-1, [N])$. For each specific top-(K-1) setting S, every candidate set in S needs to pick a value that is more similar than $x_{i,j}$, while every candidate set not in S needs to pick a value that is less similar than $x_{i,j}$. Since the choices of value between different candidate sets are independent, we can calculate this by multiplying different entries of the similarity tally vector α.

We observe that calculating the boundary count for a value $x_{i,j}$ can be efficient when K is small. For example, if we use a 1-NN classifier, the only S that we consider is the empty set, and thus, the boundary count merely equals $\prod_{n \in [N], n \neq i} \alpha_{i,j}[n]$.

Example 3.3. We can see this, in Figure 4 from Step 3 to Step 4, where the size of the boundary set $|BSet(2, 2; 1)|$ is computed as the product over elements of α, excluding $\alpha[2]$. Here, the boundary set for $x_{2,2}$ is actually empty. This happens because both candidates from C_3 are more similar to t than $x_{2,2}$ is, that is, $\alpha_{2,2}[3] = 0$. Consequently, since every possible world must contain one element from C_3, we can see that $x_{2,2}$ will never be in the Top-1, which is why its boundary set contains zero elements.

If we had tried to construct the boundary set for $x_{3,1}$, we would have seen that it contains two possible worlds. One contains $x_{2,1}$ and the other contains $x_{2,2}$, because both are less similar to t than $x_{3,1}$ is, so they cannot interfere with its Top-1 position. On the other hand, both possible worlds have to contain $x_{1,1}$ because selecting $x_{1,2}$ would prevent $x_{3,1}$ from being the Top-1 example.

Building Block 2: Label Support. To get the prediction of a KNN classifier, we can reason about the label tally vector γ, and not necessarily the specific configurations of the top-K set. It answers the following question: *Given a specific configuration of the label tally vector γ, how many possible worlds in the boundary set of $x_{i,j}$ support this γ?* We call this the *Support* of the label tally vector γ:

$$Support(i, j, \gamma) = |\{D : \gamma^D = \gamma \wedge D \in BSet(i, j; K)\}|.$$

Example 3.4. For example, when $K = 3$ and $|\mathcal{Y}| = 2$, we have 4 possible label tallies: $\gamma \in \{[0, 3], [1, 2], [2, 1], [3, 0]\}$. Each tally defines a distinct partition of the boundary set of $x_{i,j}$ and the size of this partition is the support for that tally. Note that one of these tallies always has support 0, which happens when $\gamma_l = 0$ for the label $l = y_i$, thus excluding $x_{i,j}$ from the top-K set.

For $K = 1$, a label tally can only have one non-zero value that is equal to 1 only for a single label l. Therefore, all the elements in the boundary set of $x_{i,j}$ can support only one label tally vector that has $\gamma_l = 1$ where $l = y_i$. This label tally vector will always have the support equal to the boundary count of $x_{i,j}$.

Calculating the support can be done with dynamic programming. First, we can partition the whole incomplete dataset into $|\mathcal{Y}|$ many subsets, each of which only contains incomplete data points (candidate sets) of the same label $l \in |\mathcal{Y}|$:

$$\mathcal{D}_l = \{(C_i, y_i) : y_i = l \wedge (C_i, y_i) \in \mathcal{D}\}.$$

Clearly, if we want a possible world D that supports the label tally vector γ, its top-K set needs to have γ_1 candidate sets from $\mathcal{D}_1$, γ_2 candidate sets from $\mathcal{D}_2$, and so on. *Given that $x_{i,j}$ is on the boundry, how many ways do we have to pick γ_l many candidate sets from $\mathcal{D}_l$ in the top-K set?* We can represent this value as $C_l^{i,j}(\gamma_l, N)$, with the following recursive structure:

$$C_l^{i,j}(c, n) = \begin{cases} C_l^{i,j}(c, n-1), & \text{if } y_n \neq l \ \vee \ x_n = x_i, \\ C_l^{i,j}(c-1, n-1), & \text{if } x_n = x_i, \text{otherwise} \\ \alpha_{i,j}[n] \cdot C_l^{i,j}(c, n-1) + (M - \alpha_{i,j}[n]) \cdot C_l^{i,j}(c-1, n-1). \end{cases}$$

This recursion defines a process in which one scans all candidate sets from (C_1, y_1) to (C_N, y_N). At candidate set (C_n, y_n):

(1) If y_n is not equal to our target label l, the candidate set (C_n, y_n) will not have any impact on the count.
(2) If x_n happens to be x_i, this will not have any impact on the count as x_i is always in the top-K set, by definition. However, this means that we have to decrement the number of available slots c.
(3) Otherwise, we have two choices to make:
   (a) Put (C_n, y_n) into the top-K set, and there are $(M - \alpha_{i,j}[n])$ many possible candidates to choose from.
   (b) Do not put (C_n, y_n) into the top-K set, and there are $\alpha_{i,j}[n]$ many possible candidates to choose from.

It is clear that this recursion can be computed as a dynamic program in $O(N \cdot M)$ time. This DP is defined for $c \in \{0 \ldots K\}$ which is the exact number of candidates we want to have in the top-K, and $n \in \{1 \ldots N\}$ which defines the subset of examples $x_i : i \in \{1 \ldots N\}$ we are considering. The boundary conditions of this DP are $C_l^{i,j}(-1, n) = 0$ and $C_l^{i,j}(c, 0) = 1$.

Given the result of this dynamic programming algorithm for different values of l, we can calculate the support of label tally γ:

$$Support(i, j, \gamma) = \prod_{l \in \mathcal{Y}} C_l^{i,j}(\gamma_l, N),$$

which can be computed in $O(NM|\mathcal{Y}|)$.

Example 3.5. If we assume the situation shown in Figure 4, we can try for example to compute the value of $Support(3, 1, \gamma)$ where $\gamma = [1, 0]$. We would have $C_0^{3,1}(1, N) = 1$ because x_3 (the subset of D with label 0) must be in the top-K, which happens only when $x_3 = x_{3,1}$. On the other hand we would have $C_1^{3,1}(0, N) = 2$ because both x_1 and x_2 (the subset of D with label 1) must be out of the top-K, which happens when $x_1 = x_{1,1}$ while x_2 can be either equal to $x_{2,1}$ or $x_{2,2}$. Their mutual product is equal to 2, which we can see below the tally column under $x_{3,1}$.

3.1.2 $K = 1$, $|\mathcal{Y}| = 2$. Given the above two building blocks, it is easy to develop an algorithm for the case $K = 1$ and $|\mathcal{Y}| = 2$. In SS, we use the result of $Q2$ to answer both $Q1$ and $Q2$. Later we will introduce the MM algorithm that is dedicated to $Q1$ only.

We simply compute the number of possible worlds that support the prediction label being 1. We do this by enumerating all possible candidate values $x_{i,j}$. If this candidate has label $y_i = 1$, we count how many possible worlds have $x_{i,j}$ as the top-1 example, i.e., the boundry count of $x_{i,j}$. We have

$$Q2(\mathcal{D}, t, l) = \sum_{i \in [N]} \sum_{j \in [M]} \mathbb{I}[y_i = l] \cdot |BSet(i, j; K = 1)|,$$

which simplifies to

$$Q2(\mathcal{D}, t, l) = \sum_{i \in [N]} \sum_{j \in [M]} \mathbb{I}[y_i = l] \cdot \prod_{n \in [N], n \neq i} \alpha_{i,j}[n].$$

If we pre-compute the whole α matrix, it is clear that a naive implementation would calculate the above value in $O(N^2M)$. However, as we will see later, we can do much better.

Efficient Implementation. We can design a much more efficient algorithm to calculate this value. The idea is to first sort all $x_{i,j}$ pairs by their similarity to t, $s_{i,j}$, from the smallest to the largest, and then scan them in this order. In this way, we can incrementally maintain the $\alpha_{i,j}$ vector during the scan.

Let (i, j) be the current candidate value being scanned, and (i', j') be the candidate value right before (i, j) in the sort order, we have

$$\alpha_{i,j}[n] = \begin{cases} \alpha_{i',j'}[n] + 1 \text{ if } n = i', \\ \alpha_{i',j'}[n]. \end{cases} \tag{1}$$

Therefore, we are able to compute, for each (i, j), its

$$\prod_{n \in [N], n \neq i} \alpha_{i,j}[n] \tag{2}$$

in $O(1)$ time, *without pre-computing the whole α*. This will give us an algorithm with complexity $O(MN \log MN)$!

Example 3.6. In Figure 4 we depict exactly this algorithm. We iterate over the candidates $x_{i,j}$ in an order of increasing similarity with the test example t (Step 1). In each iteration we try to compute the number of possible worlds supporting $x_{i,j}$ to be the top-1 data point (Step 2). We update the tally vector α according to Equation 1 (Step 3) and multiply its elements according to Equation 2 (Step 4) to obtain the boundary cont. Since $K = 1$, the label support for the label $l = y_i$ is trivially equal to the boundary count and zero for $l \neq y_i$ (Step 5). We can see that the label 0 is supported by 2 possible worlds when $x_3 = x_{3,1}$ and 4 possible worlds when $x_3 = x_{3,2}$. On the other hand, label 1 has non-zero support only when $x_1 = x_{1,2}$. Finally, the number of possible worlds that will predict label l is obtained by summing up all the label supports in each iteration where $l = y_i$ (Step 6). For label 0 this number is $2 + 4 = 6$, and for label 1 it is $0 + 0 + 0 + 2 = 2$.

Summary of Other Optimizations. For the general case, one can further optimize the SS algorithm. We propose a divide-and-conquer version of SS algorithm (SS-DC), which renders the complexity as $O(N \cdot M \cdot (\log(N \cdot M) + K \cdot \log N))$ for any K and $|\mathcal{Y}|$. The idea behind SS-DC is that we observed that in SS algorithm (1) all the states relevant for each iteration of the outer loop are stored in α, and (2) between two iterations, only one element of α is updated. We can take advantage of these observations to reduce the cost of computing the dynamic program by employing divide-and-conquer. We leave the details of SS-DC to the full version [1].

4 APPLICATION: DATA CLEANING FOR ML

In this section, we show how to use the proposed CP framework to design an effective data cleaning solution, called CPClean, for the important application of data cleaning for ML. We assume as input a dirty training set $\mathcal{D}_{train}$ with unknown ground truth D^* among all possible worlds $\mathcal{I}_{\mathcal{D}}$. Our goal is to select a version D from $\mathcal{I}_{\mathcal{D}}$, such that the classifier trained on $\mathcal{A}_D$ has the same validation accuracy as the classifier trained on the ground truth world $\mathcal{A}_{D^*}$.

Cleaning Model. Given a dirty dataset $\mathcal{D} = \{(C_i, y_i)\}_{i \in [N]}$, in this paper, we focus on the scenario in which the candidate set C_i for each data example is created by automatic data cleaning algorithms or a predefined noise model. For each uncertain data example C_i, we can ask a human to provide its true value $x_i^* \in C_i$. Our goal is to find a good strategy to prioritize which dirty examples to be cleaned. That is, a cleaning strategy of T steps can be defined as

$$\pi \in [N]^T,$$

which means that in the first iteration, we clean the example π_1 (by querying human to obtain the ground truth value of C_{π_1}; in the second iteration, we clean the example π_2; and so on.[1] Applying a cleaning strategy π will generate a *partially cleaned* dataset $\mathcal{D}_\pi$ in which all cleaned candidate sets C_{π_i} are replaced by $\{x_{\pi_i}^*\}$.

Formal Cleaning Problem Formulation. The question we need to address is *"What is a successful cleaning strategy?"* Given a validation set D_{val}, the view of CPClean is that a successful cleaning strategy π should be the one that produces a partially cleaned dataset $\mathcal{D}_\pi$ in which all validation examples $t \in D_{val}$ can be certainly predicted. In this case, picking any possible world defined by $\mathcal{D}_\pi$, i.e., $\mathcal{I}_{\mathcal{D}_\pi}$, will give us a dataset that has the same accuracy, on the validation set, as the ground truth world D^*. This can be defined precisely as follows.

We treat each candidate set C_i as a random variable $\mathbf{c}_i$, taking values in $\{x_{i,1}, ..., x_{i,M}\}$. We write $\mathbf{D} = \{(\mathbf{c}_i, y_i)\}_{i \in [N]}$. Given a cleaning strategy π we can define the conditional entropy of the classifier prediction on the validation set as

$$\mathcal{H}(\mathcal{A}_{\mathbf{D}}(D_{val}) | \mathbf{c}_{\pi_1}, ..., \mathbf{c}_{\pi_T}) := \frac{1}{|D_{val}|} \sum_{t \in D_{val}} \mathcal{H}(\mathcal{A}_{\mathbf{D}}(t) | \mathbf{c}_{\pi_1}, ..., \mathbf{c}_{\pi_T}).$$

Naturally, this gives us a principled objective for finding a "good"

[1] Note that using $[N]^T$ leads to the same strategy as using $[N] \times [N-1] ... [N-T]$ and thus we use the former for simplicity. This is because, in our setting, cleaning the same example twice will not decrease the entropy.

cleaning strategy that minimizes the human cleaning effort. Let $\dim(\pi)$ be the number of cleaning steps (cardinality), we hope to

$$\begin{aligned} \min_{\pi} \quad & \dim(\pi) \\ s.t., \quad & \mathcal{H}(\mathcal{A}_{\mathrm{D}}(D_{val}) | \mathbf{c}_{\pi_1} = x^*_{\pi_1}, ..., \mathbf{c}_{\pi_T} = x^*_{\pi_T}) = 0. \end{aligned}$$

If we are able to find a cleaning strategy in which

$$\mathcal{H}(\mathcal{A}_{\mathrm{D}}(D_{val}) | \mathbf{c}_{\pi_1} = x^*_{\pi_1}, ..., \mathbf{c}_{\pi_T} = x^*_{\pi_T}) = 0,$$

we know that this strategy would produce a partially cleaned dataset $\mathcal{D}_\pi$ on which all validation examples can be CP'ed. Note that we can use the query $Q2$ to compute this conditional entropy:

$$\mathcal{H}(\mathcal{A}_{\mathrm{D}}(t) | \mathbf{c}_{\pi_1} = x^*_{\pi_1}, ..., \mathbf{c}_{\pi_T} = x^*_{\pi_T}) = -\sum_{y \in \mathcal{Y}} p_y \log p_y,$$

where $p_y = Q2(\mathcal{D}_\pi, t, y)/|\mathcal{D}_\pi|$.

Connections to ActiveClean. The idea of prioritizing human cleaning effort for downstream ML models is not new — ActiveClean [23] explores an idea with a similar goal. However, there are some important differences between our framework and ActiveClean. The most crucial one is that our framework relies on *consistency* of predictions instead of the *gradient*, and therefore, we do not need labels for the validation set and our algorithm can be used in ML models that cannot be trained by gradient-based methods. The KNN classifier is one such example. Since both frameworks essentially measure some notion of "local sensitivity," it is interesting future work to understand how to combine them.

4.1 The CPClean Algorithm

Finding the solution to the above objective is, not surprisingly, NP-hard [39]. In this paper, we take the view of sequential information maximization introduced by [9] and adapt the respective greedy algorithm for this problem. We first describe the algorithm, and then review the theoretical analysis of its behavior.

Principle: Sequential Information Maximization. Our goal is to find a cleaning strategy that *minimizes* the *conditional entropy* as fast as possible. An equivalent view of this is to find a cleaning strategy that *maximizes* the *mutual information* as fast as possible. To see why this is the case, note that

$$I(\mathcal{A}_{\mathrm{D}}(D_{val}); \mathbf{c}_{\pi_1}, ..., \mathbf{c}_{\pi_T}) = \mathcal{H}(\mathcal{A}_{\mathrm{D}}(D_{val})) - \mathcal{H}(\mathcal{A}_{\mathrm{D}}(D_{val}) | \mathbf{c}_{\pi_1}, ..., \mathbf{c}_{\pi_T}),$$

where the first term $\mathcal{H}(\mathcal{A}_{\mathrm{D}}(D_{val}))$ is a constant independent of the cleaning strategy. While we use the view of minimizing conditional entropy in implementing the CPClean algorithm, the equivalent view of maximizing mutual information is useful in deriving theoretical guarantees about CPClean.

Given the current T-step cleaning strategy $\pi_1, ..., \pi_T$, our goal is to greedily find the *next* data example to clean $\pi_{T+1} \in [N]$ that minimizes the entropy conditioned on the partial observation as fast as possible:

$$\pi_{T+1} = \arg\min_{i \in [N]} \mathcal{H}(\mathcal{A}_{\mathrm{D}}(D_{val}) | \mathbf{c}_{\pi_1} = x^*_{\pi_1}, ..., \mathbf{c}_{\pi_T} = x^*_{\pi_T}, \mathbf{c}_i = x^*_i).$$

Practical Estimation. The question thus becomes how to estimate

$$\mathcal{H}(\mathcal{A}_{\mathrm{D}}(D_{val}) | \mathbf{c}_{\pi_1} = x^*_{\pi_1}, ..., \mathbf{c}_{\pi_T} = x^*_{\pi_T}, \mathbf{c}_i = x^*_i)?$$

The challenge is that when we are trying to decide which example to clean, we do not know the ground truth for item i, x^*_i. As a result, we need to assume some priors on how likely each candidate value

Algorithm 1 Algorithm CPClean.

Input: $\mathcal{D}$, incomplete training set; D_{val}, validation set.
Output: D, a dataset in $\mathcal{I}_{\mathcal{D}}$ s.t. $\mathcal{A}_D$ and $\mathcal{A}_{D^*}$ have same validation accuracy

1: $\pi \leftarrow [\,]$
2: **for** $T = 0$ to $N-1$ **do**
3: **if** D_{val} all CP'ed **then**
4: **break**
5: $min_entropy \leftarrow \infty$
6: **for all** $i \in [N] \backslash \pi$ **do**
7: $entropy = \frac{1}{M} \sum_{j \in [M]} \mathcal{H}(\mathcal{A}_{\mathrm{D}}(D_{val}) | \mathbf{c}_{\pi_1} = x^*_{\pi_1}, ..., \mathbf{c}_{\pi_T} = x^*_{\pi_T}, \mathbf{c}_i = x_{i,j})$
8: **if** $entropy < min_entropy$ **then**
9: $\pi_{T+1} \leftarrow i, min_entropy \leftarrow entropy$
10: $\mathbf{x}^*_{\pi_{T+1}} \leftarrow$ obtain the ground truth of $C_{\pi_{T+1}}$ by human
11: **return** Any world $D \in \mathcal{I}_{\mathcal{D}_\pi}$

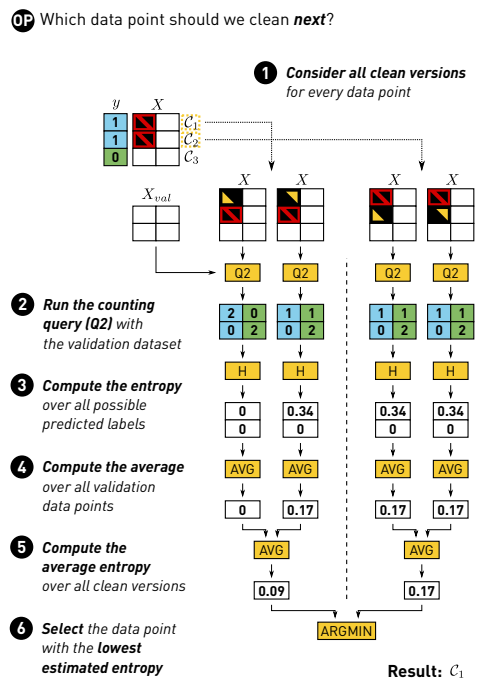

Figure 5: CPClean via sequential info. maximization.

$x_{i,j}$ is the ground truth x^*_i. In practice, we find that a uniform prior already works well and will use it throughout this work:[2]

$$\frac{1}{M} \sum_{j \in [M]} \mathcal{H}(\mathcal{A}_{\mathrm{D}}(D_{val}) | \mathbf{c}_{\pi_1} = x^*_{\pi_1}, ..., \mathbf{c}_{\pi_T} = x^*_{\pi_T}, \mathbf{c}_i = x_{i,j}). \quad (3)$$

The above term can thus be calculated by invoking the $Q2$ query.

In practice, instead of using all validation examples, we can estimate it over a mini-batch randomly sampled from the validation set, similar to how stochastic gradient descent is often used in place of gradient descent. In our experiments, we used 32 as the batch size to compute the above term.

CPClean. The pseudocode for CPClean is shown in Algorithm 1. The algorithm starts with an empty cleaning strategy (line 1). In each iteration, given the current cleaning strategy $\pi_1, ..., \pi_T$, we compute the expected value of entropy conditioned on cleaning one extra training example (lines 6-7). We select the next example to clean π_{T+1} that minimizes the entropy (lines 8-9). We then ask a human to clean the selected example (line 10). The greedy algorithm

[2] For more general priors, we believe that our framework, in a similar spirit as [41], can support priors under which different cells are independent (e.g., to encode prior distributional information) and we plan to extend this work in the future.

terminates when all validation examples become CP'ed (line 3). Finally, we return any world D among all possible partially cleaned worlds $\mathcal{I}_{\mathcal{D}_\pi}$ (line 12). Since all the validation examples are CP'ed with $\mathcal{I}_{\mathcal{D}_\pi}$, classifier trained on any world in $\mathcal{I}_{\mathcal{D}_\pi}$, including the unknown ground truth world D^*, has the same validation accuracy. Therefore, $\mathcal{A}_D$ has the same validation accuracy as $\mathcal{A}_{D^*}$.

Example 4.1. Figure 5 shows an example of how CPClean selects the next data example to clean in each iteration via sequential information maximization. Assume there are two dirty examples, C_1 and C_2, in the training set and each example has two candidate repairs. Therefore, there are four possible clean versions after cleaning the next data point, based on which data point is selected to be cleaned and which candidate repair is the ground truth. For example, the first table at step 1 shows the clean version after cleaning C_1 if $x_{1,1}$ is the ground truth. Assume that we have two validation examples. We run the counting query (Q2) on each possible version w.r.t. each validation example as shown in step 2. Then we can compute the entropy of predictions on validation examples as shown in step 3 and 4. The results show that if C_1 is selected to be cleaned, the entropy may become 0 or 0.17 depending on which candidate repair is the ground truth. We assume that each of the two candidate repairs has 50% chance to be the ground truth. Therefore, the expected entropy after cleaning C_1 is $(0 + 0.17)/2 = 0.09$ (step 5). Similarly, we compute the expected entropy after cleaning C_2 as 0.17. Since C_1 has a lower expected entropy, we select C_1 to clean.

Complexity of CPClean. In each iteration of Algorithm 1, we need to (1) automatically select a tuple; and (2) ask human to clean the selected tuple. To select a tuple, we need to first check whether $|D_{val}|$ are all CP'ed (line 3), which invokes the $Q1$ query $O(|D_{val}|)$ times. If not all D_{val} are CP'ed, we need to compute expected value of entropy $O(N)$ times (line 6). Computing the expected value of entropy (line 7) needs to invoke the $Q2$ query $O(M|D_{val}|)$ times. Therefore, when the downstream ML model is KNN, using our SS-DC algorithm for $Q1$ and $Q2$, the complexity for selecting a tuple at each iteration is $O(N^2M^2|D_{val}| \times (\log(MN) + K \log N))$. The quadratic complexity in tuple selection is acceptable in practice, since human involvement is generally considered to be the most time consuming part in practical data cleaning [14].

Summary of Other Optimizations. Algorithm 1 can be further optimized. We introduce a special version of the SS algorithm called SS-BDP, which renders the complexity of selecting an example as $O(N^2M^2|D_{val}|)$. Algorithm 1 invokes Q2 $O(NM)$ times on each validation example; the idea behind SS-BDP is that it produces a precomputed bidirectional dynamic program, which can be reused in each of the $O(NM)$ times Q2 is invoked to reduce the computational complexity of each invocation down to $O(NM)$. We describe this method in more detail in the appendix of the full version [1].

Theoretical Guarantee. The theoretical analysis of this algorithm, while resembling that of [9], is non-trivial. We provide the main theoretical analysis here and leave the proof to the full version [1].

Corollary 4.2. *Let the optimal cleaning policy that minimizes the cleaning effort while consistently classifying the test examples be denoted by $D_{Opt} \subseteq D_{train}$ with limited cardinality t, such that*

$$D_{Opt} = \underset{D_\pi \subseteq \mathcal{D}_{train},\, |D_\pi| \le t}{\arg\max} \; I(\mathcal{A}_{\mathrm{D}}(D_{val}); D_\pi).$$

Dataset	Error Type	#Examples	#Features	Missing rate
BabyProduct [11]	real	4019	7	14.1%
Supreme [33]	synthetic	3052	7	20%
Bank [28]	synthetic	3192	8	20%
Puma [28]	synthetic	8192	8	20%
Sick [38]	synthetic	3772	29	20%
Nursery [38]	synthetic	12960	8	20%

Table 1: Datasets characteristics

The sequential information maximization strategy follows a near optimal strategy where the information gathering satisfies

$$I(\mathcal{A}_{\mathrm{D}}(D_{val}); \mathbf{c}_{\pi_1}, ..., \mathbf{c}_{\pi_T})$$
$$\ge I(\mathcal{A}_{\mathrm{D}}(D_{val}); D_{Opt})(1 - \exp(-T/\theta t'))$$

where

$$\theta = \left(\max_{v \in \mathcal{D}_{train}} I(\mathcal{A}_{\mathrm{D}}(D_{val}); v) \right)^{-1}$$
$$t' = t \min\{\log|\mathcal{Y}|, \log M\}, \quad \mathcal{Y} : \textit{label space}, \; M : |C_i|.$$

The above result, similarly as in [9], suggests that data cleaning is guaranteed to achieve near-optimal information gathering up to a logarithmic factor $\min(\log|\mathcal{Y}|, \log M)$ when leveraging the sequential information strategy.

5 EXPERIMENTS

We now conduct an extensive set of experiments to compare CPClean with other data cleaning approaches in the context of K-nearest neighbor classifiers.

5.1 Experimental Setup

Hardware and Platform. All our experiments were performed on a machine with a 2.20GHz Intel Xeon(R) Gold 5120 CPU.

Datasets. We evaluate the CPClean algorithm on five datasets with synthetic missing values and one dataset with *real* missing values, where we are able to obtain the *ground truth* via manual Googling [3]. We summarize all datasets in Table 1.

We use five real-world datasets (Supreme, Bank, Puma, Sick, Nursery), originally with no missing values, to inject synthetic missing values. We simulate two types of missingness:

- *Random*: Every cell has an equal probability of being missing.
- *Systematic*: Different cells have different probabilities of being missing. In particular, cells in features that are more important for the classification task have higher missing probabilities (e.g., high income people are less likely to report their income in a survey). This corresponds to the "Missing Not At Random" assumption [30]. We assess the relative importance of each feature in a classification task by measuring the accuracy loss after removing a feature, and use the relative feature importance as the relative probability of values in a feature to be missing.

The BabyProduct dataset contains various baby products of different categories (e.g., bedding, strollers). Since the dataset was scraped from websites using Python scripts [11], many records have missing values, presumably due to extractor errors. We randomly selected a subset of product categories with 4,109 records and we designed a classification task to predict whether a given baby product has a high price or low price based on other attributes (e.g. weight, brand, dimension, etc). For records with missing brand attribute, we then perform a Google search using the product title to

[3] The dirty version, the ground-truth version, as well as the version after applying CPClean, for all datasets can be found in https://github.com/chu-data-lab/CPClean/tree/master/datasets.

	Numerical	Categorical
Simple Imputation	Min, 25-percentile, Mean, 75-percentile, Max	All active domain values
ML-based Imputation	KNN, Decision Tree, EM, missForest, Datawig	missForest, Datawig

Table 2: Methods to Generate Candidate Repairs

obtain the product brand. For example, one record titled "*Just Born Safe Sleep Collection Crib Bedding in Grey*" is missing the product brand, and a search reveals that the brand is "Just Born."

For all experiments (except Figure D.2), we randomly select 1,000 examples as the validation set. We then randomly split the remaining examples into training/test set by 70%/30%. For datasets originally with no missing values, we inject synthetic missing values to the training sets. For the BabyProduct dataset with real missing values, we fill in the missing values in the validation and test sets with the ground truth to make the validation and test sets clean.

Model. We use a KNN classifier with K=3 and use Euclidean distance as the similarity function.

Cleaning Algorithms Compared. We compare the following approaches for handling missing values in the training data.

• *Ground Truth*: This method uses the ground-truth version of the dirty data, and shows the performance upper-bound.

• *Default Cleaning*: This is the default and most commonly used way for cleaning missing values in practice, namely, missing cells in a numerical column are filled in using the mean value of the column, and those in a categorical column are filled using the most frequent value of that column.

• *CPClean*: This is our proposal, where the SS algorithm is used to answer Q1 and Q2. *CPClean* needs a candidate repair set C_i for each example with missing values. We consider various missing value imputation methods to generate candidate repairs, including both simple imputation methods and ML-based imputation methods. We summarize the methods to generate candidate repairs in Table 2.

– *Simple Imputation.* We impute the missing values in a column based on values in the same column only. Specifically, for numerical missing values, we consider five simple imputation methods that impute the missing values with the minimum, the 25-th percentile, the mean, the 75-th percentile, and the maximum of the column, respectively; for categorical missing values, we consider all active domain values of the column as candidate repairs.

– *ML-based imputation.* These methods build ML models to predict missing values in a column based on information in the entire table. For numerical missing values, we consider 5 ML-based imputation methods including K-nearest neighbors (KNN) imputation [37], Decision Tree imputation [8], Expectation-Maximization (EM) imputation [12], missForest based on random forest [35], and Datawig [7] using deep neural networks. For KNN and Decision Tree imputation, we use the implementation from *scikit-learn* [27]. For EM imputation, we use the *impyute* package.[4] For missForest, we use the *missingpy* package.[5] For Datawig, we use the open-source implementation from the paper with default setup. For categorical missing values, we consider missForest and Datawig, as the implementation of other three methods does not support imputing categorical missing values.

[4]https://impyute.readthedocs.io/

[5]https://github.com/epsilon-machine/missingpy/

We simulate human cleaning by picking the candidate repair that is closest to the ground truth based on the Euclidean distance. We sample a batch of 32 validation examples to estimate the entropy (Equation 3) at each iteration of CPClean.

• *CPClean-ET*: This is the *CPClean* algorithm with early termination. In other words, *CPClean-ET* allows users to terminate the cleaning algorithm early before all validation examples are CP'ed. Recall that CPClean is an online cleaning algorithm, where humans clean one example at each iteration. Therefore, in real deployment of CPClean, users can observe the validation accuracy as more examples get cleaned and users can terminate the process early if they believe the accuracy gain is not worth further cleaning efforts at any time. In the experiments, for every 10% of additional training data manually cleaned, the CPClean algorithm is terminated if the validation accuracy improvement is less than 0.005.

• *BestSimple*: For every dataset, we select a missing value imputation method from all simple imputation methods (c.f. Table 2) that achieves the highest accuracy on the validation set.

• *BestML*: For every dataset, we select a missing value imputation method from ML-based imputation methods (c.f. Table 2) that achieves the highest accuracy on the validation set.

• *BoostClean*: It is one of the state-of-the-art automatic data cleaning methods for ML [21]. In contrast to *BestSimple* and *BestML*, it selects an ensemble of cleaning methods from a predefined set using statistical boosting to maximize the validation accuracy. To ensure fair comparison, the predefined set of cleaning methods used in BoostClean is the same as that of CPClean, i.e., Table 2. The number of boosting stages is set to be 5, the best setting in [21].

• *HoloClean*: This is the state-of-the-art probabilistic data cleaning method [29]. As a weakly supervised machine learning system, it leverages multiple signals (e.g. quality rules, value correlations, reference data) to build a probabilistic model for data cleaning. We use a version of HoloClean that imputes the missing values using attention-based mechanism and only relies on information from the input table [42]. Note that the focus of HoloClean is to find the most likely fix for a missing cell in a dataset without considering how the dataset is used by downstream classification tasks.

• *RandomClean*: While CPClean uses the idea of sequential information maximization to select which examples to manually clean, *RandomClean* selects an example to clean randomly.

Performance Measures. Besides the cleaning effort spent, we are mainly concerned with the test accuracy of models trained on datasets cleaned by different cleaning methods. Instead of reporting exact test accuracies for all methods, we only report them for *Ground Truth* and *Default Cleaning*, which represents the upper bound and the lower bound, respectively. For other methods, we report the percentage of closed gap defined as:

$$\textit{gap closed by } X = \frac{\text{accuracy(X) - accuracy(}\textit{Default Cleaning}\text{)}}{\text{accuracy(}\textit{Ground Truth}\text{) - accuracy(}\textit{Default Cleaning}\text{)}}.$$

5.2 Experimental Results

Model Accuracy Comparison. Table 3 shows the end-to-end performance of our method and other automatic cleaning methods. Notice that the gap closed can sometimes be negative as some cleaning method may actually produce a worse model than *Default Cleaning*. For example, the -1,000% happens as HoloClean produces a model with 0.9114 test accuracy ($-1,000\% = \frac{0.9114-0.9395}{0.9423-0.9395}$). Also

MV Type	Dataset	*Ground Truth*	*Default Clean*	*Boost Clean*	*HoloClean*	*BestSimple*	*BestML*	*CPClean*		*CPClean-ET*	
		Test Accuracy	Test Accuracy	Gap Closed	Gap Closed	Gap Closed	Gap Closed	Examples Cleaned	Gap Closed	Examples Cleaned	Gap Closed
Random	Supreme	0.966	0.949	125%	**150%**	127%	77%	28%	100%	20%	100%
	Bank	0.739	0.704	**111%**	-21%	68%	110%	81%	**111%**	10%	68%
	Puma	0.754	0.726	28%	-24%	26%	12%	56%	**79%**	20%	12%
	Nursery	0.980	0.960	**139%**	17%	10%	-15%	22%	103%	20%	109%
	Sick	0.942	0.940	0%	-1000%	17%	88%	17%	**250%**	17%	250%
Systematic	Supreme	0.933	0.796	10%	-10%	0%	10%	54%	**100%**	20%	96%
	Bank	0.767	0.641	0%	1%	0%	1%	83%	**103%**	80%	99%
	Puma	0.733	0.627	0%	-9%	18%	-14%	68%	**93%**	40%	72%
	Nursery	0.995	0.572	1%	-5%	1%	-4%	28%	**93%**	28%	93%
	Sick	0.945	0.928	58%	8%	-2%	58%	20%	**133%**	10%	142%
Real	BabyProduct	0.842	0.662	11%	1%	11%	1%	100%	**100%**	50%	90%

Table 3: End-to-End Performance of CC and Automatic Cleaning Methods

note that the gap closed can sometimes be greater than 100% as some cleaning method may produce a model that has a higher test accuracy than the model trained using the ground-truth data. For example, the 250% happens as *CPClean* produces a model with 0.9466 test accuracy ($250\% = \frac{0.9466-0.9395}{0.9423-0.9395}$). These are not surprisingly as ML is an inherently stochastic process — it is very likely that one possible world is better than the ground-truth world in terms of end model performance, especially when evaluated on an unseen test set. We have the following observations from Table 3:

(1) We can observe that random missingness and systematic missingness exhibit vastly different impacts on model accuracy. The maximum gap caused by random missing values is 0.035, while the maximum gap caused by systematic missing values is 0.423.
(2) Comparing *BestSimple*, *BestML*, and *BoostClean*, three methods that select from a pre-defined set of cleaning methods to maximize validation accuracy, we can see that (a) there is no obvious winner between *BestSimple* and *BestML*, suggesting that ML-based imputation methods are not necessarily better than simple imputation methods; and (b) *BoostClean* is noticeably better than *BestSimple* and *BestML*, suggesting that intelligently selecting an ensemble of cleaning methods is usually better than one cleaning method.
(3) Comparing *BoostClean* with *HoloClean*, one of the state-of-the-art generic cleaning methods, *BoostClean* is noticeably better. This means that designing data cleaning solutions tailored to a downstream application (in this case, KNN classification models) is usually better than applying generic cleaning solutions without considering how cleaned data will be consumed.
(4) Comparing the best automatic cleaning method *BoostClean* with *CPClean*, we can see that *CPClean* has a considerably better performance. In most cases, *CPClean* is able to close almost 100% of the gap (i.e., achieving ground-truth test accuracy), and the average percentage of examples cleaned is 51%. On Sick with systematic missing values, *CPClean* only requires cleaning 20% of dirty examples to close all the gaps. The advantage of *CPClean* is most appealing on datasets with systematic missingness, where *BoostClean* fails to achieve good performances in most cases while *CPClean* closes 100% in all cases. In contrast, under random missingness, default cleaning can already achieve similar accuracy to ground-truth data, and hence the amount of additional benefit by manual cleaning is limited. Indeed, under random missingness, *CPClean* achieves similar performances with *BoostClean*, except for Sick.
(5) We notice that for BabyProduct, *CPClean* requires cleaning all examples for all validation examples to be CP'ed. This is because we consider every active domain value as a possible repair for the

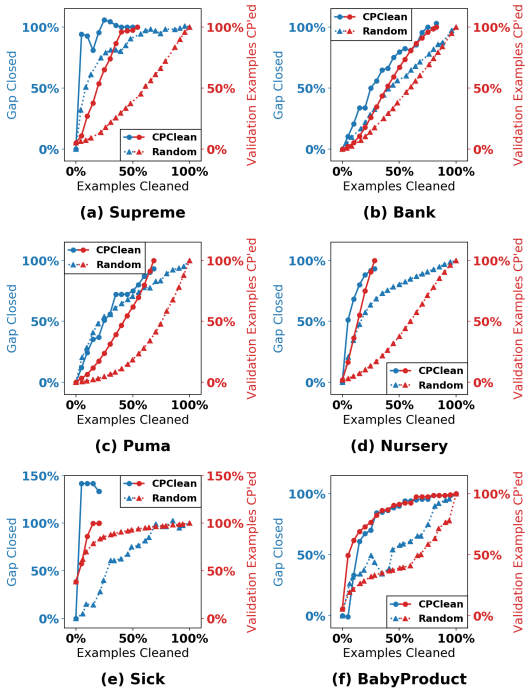

Figure 6: Comparison with Random Cleaning for Systematic and Real Missing Values

categorical missing attribute Product Brand in BabyProduct, and it has 60 unique values in the dataset. This creates a very diverse set of possible worlds, making it difficult for validation examples to become CP'ed.
(6) Comparing *CPClean* with *CPClean-ET*, we can see that *CPClean-ET* retains most of the benefits in *CPClean* while significantly reducing human cleaning efforts. For example, for BabyProduct, *CPClean-ET* can save half of cleaning efforts and still close 90% of the gap.

Compared with Random Cleaning. As discussed before, if users have a limited cleaning budget, they may choose to terminate CPClean early. To study the effectiveness of CPClean in prioritizing manual cleaning effort, we compare it with RandomClean that randomly picks an example to clean at each iteration. The results for RandomClean are the average of 10 runs.

The red lines in Figure 6 show the percentage of CP'ed examples in the validation set as more and more examples are cleaned for systematic missing values. As we can see, *CPClean* (solid red line) dramatically outperforms the *RandomClean* (dashed red line) both

Alg.	Supreme	Bank	Puma	Nusery	Sick	BabyProduct
SS-BDP	8s	2s	7s	9s	6s	35s
SS-DC	144s	109s	140s	46s	258s	>1h
SS	>1h	>1h	>1h	>1h	>1h	> 1h

Table 4: Running Time per iteration

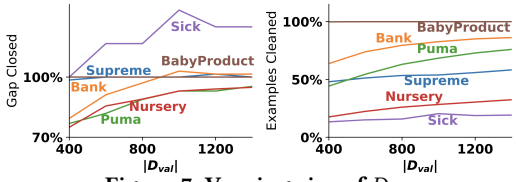

Figure 7: Varying size of D_{val}.

in terms of the number of training examples cleaned so that all validation examples are CP'ed and in terms of the rate of convergence. The blue lines in Figure 6 show the percentage of gap closed for the test set accuracy for systematic missing values. Again, we can observe that *CPClean* significantly outperforms *RandomClean*, proving that the examples picked by *CPClean* are much more useful in improving end model compared with randomly picked examples. For example, with 50% of data cleaned in Bank, *RandomClean* only closes about 50% of the gap, whereas *CPClean* closes almost 80% of the gap. The results for random missing values reveal similar findings and thus are omitted here and left to the full version [1].

Running Time. Table 4 shows the average running time of *CPClean* for selecting an example to clean on each dataset. As we can see, using *SS-BDP* algorithm to compute the entropy, for most datasets, it takes about 10s on average for *CPClean* to select an example at each iteration. On BabyProduct, since it has over 60 candidate repairs for each dirty example (about 6 times more than other datasets), it takes about 35s at each selection. Considering human cleaning usually incurs high costs (we spent about 2 minutes per record on average in manually cleaning BabyProduct), this running time is acceptable. In contrast, with the *SS-DC* algorithm, it takes over 100s at each iteration, and with the vanilla *SS* algorithm, it can take over 1 hour at each iteration.

Size of the Validation Set D_{val}. For this experiment, we first split a dataset into training/validation/test sets the same way as described in Section 5.1, except the validation set is 1,400. We then vary the size of D_{val} (400, 600, ..., 1,400) while using the same training and test sets to understand how it affects the result. Figure D.2 shows the gap closed and examples cleaned for real missing values and systematic missing values as the size of validation set increases. As we can see, both the test accuracy gap closed and the cleaning effort spent first increase and then become steady. This is because, when the validation set is small, it is easier to make all validation examples CP'ed (hence the smaller cleaning effort). However, a small validation set may not be representative of some unseen test set, and hence may not close the accuracy gap on test set. In all cases, we observe that 1K validation set is sufficiently large and further increasing it does not significantly improve the performance. The results for random missing values reveal similar findings and thus are omitted here and left to the full version of this paper [1]

6 RELATED WORK

Relational Query over Incomplete Information. This work is heavily inspired by the database literature of handling incomplete information [2], consistent query answering [5, 6, 25], and probabilistic databases [36]. While these work targets SQL analytics, our proposed consistent prediction query targets ML analytics.

Learning over Incomplete Data. The statistics and ML community have also studied the problem of learning over incomplete data. Many studies operate under certain missingness assumption (e.g., missing completeness at random) and reason about the performance of downstream classifiers in terms of asymptotic properties and in terms of different imputation strategies [13]. In this work, we focus more on the algorithmic aspect of this problem and try to understand how to enable more efficient manual cleaning of the data. Another flavor of work aims at developing ML models that are robust to certain types of noises, and multiple imputation [31] is such a method that is most relevant to us. Our CP framework can be seen as an extreme case of multiple imputation (i.e, by trying all possible imputations) with efficient implementation (in KNN), which also enables novel manual cleaning for ML use cases. The semantics of learning over incomplete data by calculating the expectation over all possible uncertain values is natural. For example, Khosravi et al. [18] explored similar semantics as ours, but for logistic regression models. [16] studied the feasibility of this problem in general, in the context of probabilistic circuits. [17] discussed tree-based models and connects it to dealing with missing values. In this paper, we focus on efficient algorithms for KNNs.

Data Cleaning and Analytics-Driven Cleaning. The research on data cleaning (DL) has been thriving for many years. Many data cleaning works focus on performing standalone cleaning without considering how cleaned data is used by downstream analytics. We refer readers to a recent survey on this topic [14]. As DC itself is an expensive process that usually needs human involvement eventually (e.g., to confirm suggested repairs), the DB community is starting to work on analytics-driven cleaning methods. SampleClean [40] targets the problem of answering SQL aggregate queries when the input data is dirty by cleaning a sample of the dirty dataset, and at the same time, providing statistical guarantees on the query results. ActiveClean [22] is an example of cleaning data intelligently for convex ML models that are trained using gradient descent. As discussed before, while both ActiveClean and our proposal assume the use of a human cleaning oracle, they are incomparable as they are targeting different ML models. BoostClean [21] automatically selects from a predefined space of cleaning algorithms, using a hold-out set via statistical boosting. We show that CPClean significantly outperforms BoostClean under the same space of candidate repairs.

7 CONCLUSION

In this work, we focused on the problem of understanding the impact of incomplete information on training downstream ML models. We present a formal study of this impact by extending the notion of *Certain Answers for Codd tables*, which has been explored by the database research community for decades, into the field of machine learning, by introducing the notion of *Certain Predictions* (CP). We developed efficient algorithms to analyze the impact via CP primitives, in the context of nearest neighor classifiers. As an application, we further proposed a novel "DC for ML" framework built on top of CP primitives that often significantly outperforms existing techniques in accuracy, with mild manual cleaning effort.

REFERENCES

[1] [n.d.]. Full version of the paper. https://github.com/chu-data-lab/CPClean/blob/master/CertainPredictionFullPaper.pdf.

[2] Serge Abiteboul, Richard Hull, and Victor Vianu. 1995. *Foundations of Databases: The Logical Level* (1st ed.). Addison-Wesley Longman Publishing Co., Inc., USA.

[3] Pankaj K. Agarwal, Boris Aronov, Sariel Har-Peled, Jeff M. Phillips, Ke Yi, and Wuzhou Zhang. 2016. Nearest-Neighbor Searching Under Uncertainty II. *ACM Trans. Algorithms* 13, 1, Article Article 3 (Oct. 2016), 25 pages. https://doi.org/10.1145/2955098

[4] Pankaj K. Agarwal, Alon Efrat, Swaminathan Sankararaman, and Wuzhou Zhang. 2012. Nearest-Neighbor Searching under Uncertainty. In *Proceedings of the 31st ACM SIGMOD-SIGACT-SIGAI Symposium on Principles of Database Systems (PODS '12)*. Association for Computing Machinery, New York, NY, USA, 225–236. https://doi.org/10.1145/2213556.2213588

[5] Marcelo Arenas, Leopoldo Bertossi, and Jan Chomicki. 1999. Consistent query answers in inconsistent databases. In *Proc. 18th ACM SIGACT-SIGMOD-SIGART Symp. on Principles of Database Systems*. 68–79.

[6] Leopoldo E Bertossi. 2011. *Database Repairing and Consistent Query Answering*. Morgan & Claypool Publishers.

[7] Felix Biessmann, Tammo Rukat, Philipp Schmidt, Prathik Naidu, Sebastian Schelter, Andrey Taptunov, Dustin Lange, and David Salinas. 2019. DataWig: Missing Value Imputation for Tables. *Journal of Machine Learning Research* 20, 175 (2019), 1–6.

[8] Lane F Burgette and Jerome P Reiter. 2010. Multiple imputation for missing data via sequential regression trees. *American journal of epidemiology* 172, 9 (2010), 1070–1076.

[9] Yuxin Chen, S. Hamed Hassani, Amin Karbasi, and Andreas Krause. 2015. Sequential Information Maximization: When is Greedy Near-optimal?. In *Conference on Learning Theory*.

[10] Xu Chu, John Morcos, Ihab F Ilyas, Mourad Ouzzani, Paolo Papotti, Nan Tang, and Yin Ye. 2015. KATARA: A Data Cleaning System Powered by Knowledge Bases and Crowdsourcing. In *Proc. ACM SIGMOD Int. Conf. on Management of Data*. 1247–1261.

[11] Sanjib Das, AnHai Doan, Paul Suganthan G. C., Chaitanya Gokhale, Pradap Konda, Yash Govind, and Derek Paulsen. [n.d.]. The Magellan Data Repository. https://sites.google.com/site/anhaidgroup/projects/data.

[12] Arthur P Dempster, Nan M Laird, and Donald B Rubin. 1977. Maximum likelihood from incomplete data via the EM algorithm. *Journal of the royal statistical society. Series B (methodological)* (1977), 1–38.

[13] Pedro J. García-Laencina, José-Luis Sancho-Gómez, and Aníbal R. Figueiras-Vidal. 2010. Pattern Classification with Missing Data: A Review. *Neural Comput. Appl.* 19, 2 (March 2010), 263–282. https://doi.org/10.1007/s00521-009-0295-6

[14] Ihab F. Ilyas and Xu Chu. 2019. *Data Cleaning*. ACM. https://doi.org/10.1145/3310205

[15] Ruoxi Jia, David Dao, Boxin Wang, Frances Ann Hubis, Nezihe Merve Gurel, Bo Li, Ce Zhang, Costas Spanos, and Dawn Song. 2019. Efficient Task-Specific Data Valuation for Nearest Neighbor Algorithms. *Proc. VLDB Endow.* 12, 11 (July 2019), 1610–1623. https://doi.org/10.14778/3342263.3342637

[16] Pasha Khosravi, YooJung Choi, Yitao Liang, Antonio Vergari, and Guy Van den Broeck. 2019. On Tractable Computation of Expected Predictions. In *Advances in Neural Information Processing Systems 32 (NeurIPS)*. http://starai.cs.ucla.edu/papers/KhosraviNeurIPS19.pdf

[17] Pasha Khosravi, Yitao Liang, YooJung Choi, and Guy Van den Broeck. 2019. What to Expect of Classifiers? Reasoning about Logistic Regression with Missing Features. *CoRR* abs/1903.01620 (2019). arXiv:1903.01620 http://arxiv.org/abs/1903.01620

[18] Pasha Khosravi, Yitao Liang, YooJung Choi, and Guy Van Den Broeck. 2019. What to expect of classifiers? reasoning about logistic regression with missing features. In *Proceedings of the 28th International Joint Conference on Artificial Intelligence*. AAAI Press, 2716–2724.

[19] Pang Wei Koh and Percy Liang. 2017. Understanding Black-box Predictions via Influence Functions. In *Proceedings of the 34th International Conference on Machine Learning, ICML 2017, Sydney, NSW, Australia, 6-11 August 2017 (Proceedings of Machine Learning Research)*, Doina Precup and Yee Whye Teh (Eds.), Vol. 70. PMLR, 1885–1894. http://proceedings.mlr.press/v70/koh17a.html

[20] Hans-Peter Kriegel, Peter Kunath, and Matthias Renz. 2007. Probabilistic Nearest-Neighbor Query on Uncertain Objects. In *Proceedings of the 12th International Conference on Database Systems for Advanced Applications (DASFAA'07)*. Springer-Verlag, Berlin, Heidelberg, 337–348.

[21] Sanjay Krishnan, Michael J Franklin, Ken Goldberg, and Eugene Wu. 2017. Boostclean: Automated error detection and repair for machine learning. *arXiv preprint arXiv:1711.01299* (2017).

[22] Sanjay Krishnan, Jiannan Wang, Eugene Wu, Michael J Franklin, and Ken Goldberg. 2016. ActiveClean: Interactive Data Cleaning For Statistical Modeling. *Proc. VLDB Endowment* 9, 12 (2016), 948–959.

[23] Sanjay Krishnan, Jiannan Wang, Eugene Wu, Michael J Franklin, and Ken Goldberg. 2016. Activeclean: Interactive data cleaning for statistical modeling. *Proceedings of the VLDB Endowment* 9, 12 (2016), 948–959.

[24] Peng Li, Xi Rao, Jennifer Blase, Yue Zhang, Xu Chu, and Ce Zhang. 2019. CleanML: A Benchmark for Joint Data Cleaning and Machine Learning [Experiments and Analysis]. *arXiv preprint arXiv:1904.09483* (2019).

[25] Andrei Lopatenko and Leopoldo E Bertossi. 2007. Complexity of Consistent Query Answering in Databases Under Cardinality-Based and Incremental Repair Semantics. In *Proc. 11th Int. Conf. on Database Theory*. 179–193.

[26] Harris Papadopoulos, Vladimir Vovk, and Alex Gammerman. 2011. Regression Conformal Prediction with Nearest Neighbours. *J. Artif. Int. Res.* 40, 1 (Jan. 2011), 815–840.

[27] F. Pedregosa, G. Varoquaux, A. Gramfort, V. Michel, B. Thirion, O. Grisel, M. Blondel, P. Prettenhofer, R. Weiss, V. Dubourg, J. Vanderplas, A. Passos, D. Cournapeau, M. Brucher, M. Perrot, and E. Duchesnay. 2011. Scikit-learn: Machine Learning in Python. *Journal of Machine Learning Research* 12 (2011), 2825–2830.

[28] Carl E Rasmussen, Radford M Neal, Geoffrey E Hinton, Drew van Camp, Michael Revow, Zoubin Ghahramani, R Kustra, and Robert Tibshirani. 1996. The DELVE manual. *URL http://www. cs. toronto. edu/~ delve* (1996).

[29] Theodoros Rekatsinas, Xu Chu, Ihab F Ilyas, and Christopher Ré. 2017. HoloClean: holistic data repairs with probabilistic inference. *Proceedings of the VLDB Endowment* 10, 11 (2017), 1190–1201.

[30] Donald B Rubin. 1976. Inference and missing data. *Biometrika* 63, 3 (1976), 581–592.

[31] Donald B. Rubin. 1996. Multiple Imputation After 18+ Years. *J. Amer. Statist. Assoc.* 91, 434 (1996), 473–489. http://www.jstor.org/stable/2291635

[32] Boris Sharchilev, Yury Ustinovskiy, Pavel Serdyukov, and Maarten de Rijke. 2018. Finding Influential Training Samples for Gradient Boosted Decision Trees. In *Proceedings of the 35th International Conference on Machine Learning, ICML 2018, Stockholmsmässan, Stockholm, Sweden, July 10-15, 2018 (Proceedings of Machine Learning Research)*, Jennifer G. Dy and Andreas Krause (Eds.), Vol. 80. PMLR, 4584–4592. http://proceedings.mlr.press/v80/sharchilev18a.html

[33] Jeffrey S Simonoff. 2013. *Analyzing categorical data*. Springer Science & Business Media.

[34] C. Sitawarin and D. Wagner. 2019. On the Robustness of Deep K-Nearest Neighbors. In *2019 IEEE Security and Privacy Workshops (SPW)*. 1–7.

[35] Daniel J Stekhoven and Peter Bühlmann. 2012. MissForest—non-parametric missing value imputation for mixed-type data. *Bioinformatics* 28, 1 (2012), 112–118.

[36] Dan Suciu, Dan Olteanu, Christopher Ré, and Christoph Koch. 2011. Probabilistic Databases. *Synthesis Lectures on Data Management* 3, 2 (2011), 1–180. https://doi.org/10.2200/S00362ED1V01Y201105DTM016 arXiv:https://doi.org/10.2200/S00362ED1V01Y201105DTM016

[37] Olga Troyanskaya, Michael Cantor, Gavin Sherlock, Pat Brown, Trevor Hastie, Robert Tibshirani, David Botstein, and Russ B Altman. 2001. Missing value estimation methods for DNA microarrays. *Bioinformatics* 17, 6 (2001), 520–525.

[38] Joaquin Vanschoren, Jan N. van Rijn, Bernd Bischl, and Luis Torgo. 2013. OpenML: Networked Science in Machine Learning. *SIGKDD Explorations* 15, 2 (2013), 49–60. https://doi.org/10.1145/2641190.2641198

[39] Chun Wa Ko, Jon Lee, and Maurice Queyranne. 1995. An Exact Algorithm for Maximum Entropy Sampling. *Oper. Res.* 43, 4 (1995), 684–691. https://doi.org/10.1287/opre.43.4.684

[40] Jiannan Wang, Sanjay Krishnan, Michael J Franklin, Ken Goldberg, Tim Kraska, and Tova Milo. 2014. A sample-and-clean framework for fast and accurate query processing on dirty data. In *Proc. ACM SIGMOD Int. Conf. on Management of Data*. 469–480.

[41] Maurice Weber, Xiaojun Xu, Bojan Karlas, Ce Zhang, and Bo Li. 2020. RAB: Provable Robustness Against Backdoor Attacks. *arXiv e-prints*, Article arXiv:2003.08904 (March 2020), arXiv:2003.08904 pages. arXiv:cs.LG/2003.08904

[42] Richard Wu, Aoqian Zhang, Ihab Ilyas, and Theodoros Rekatsinas. 2020. Attention-based Learning for Missing Data Imputation in HoloClean. *Proceedings of Machine Learning and Systems* (2020), 307–325.

Algorithm A.1 Algorithm **MM** for answering Q1 with K-NN.

Input: $\mathcal{D}$, incomplete dataset; t, target data point.
Output: r, Boolean vector, s.t. $r[y] = Q1(\mathcal{D}, t, y), \forall y \in \mathcal{Y}$.

$S \leftarrow \texttt{kernel}(\mathcal{D}, x_t)$
for all $i \in 1, ..., |\mathcal{D}|$ **do**
  $s_i^{\min} \leftarrow \min\{S_{i,j}\}_{j=1}^{M}$, $s_i^{\max} \leftarrow \max\{S_{i,j}\}_{j=1}^{M}$;
for all $l \in \mathcal{Y}$ **do**
  $s \leftarrow \texttt{zeros}(|\mathcal{D}|)$;
  for all $i \in 1, ..., |\mathcal{D}|$ **do**
    $s[i] \leftarrow s_i^{\max}$ **if** $(y_i = l)$ **else** $s_i^{\min}$;
  $I_K \leftarrow \texttt{argmax_k}(s, K)$;
  $v \leftarrow \texttt{vote}(\{y_i : i \in I_K\})$;
  if $\texttt{argmax}(v) = l$ **then**
    $r[l] \leftarrow \texttt{true}$;
  else
    $r[l] \leftarrow \texttt{false}$;
return r;

A THE MM ALGORITHM FOR Q1

One can do significantly better for Q_1 in certain cases. Instead of using the SS algorithm, we develop the MM (MinMax) algorithm that deals with the binary classification case ($|\mathcal{Y}| = 2$) with time complexity $O(N \cdot M)$. We list the MM algorithm in Algorithm A.1

Algorithm Outline. This algorithm relies on a key observation that for each label l, we can greedily construct a possible world that has the best chance of predicting label l. We call this possible world the l-extreme world and construct it by selecting from each candidate set C_i either the candidate most similar to the test example t when $y_i = l$, or the candidate least similar to t when $y_i \neq l$. We can show that the l-extreme world predicts label l if and only if there exists a possible world that predicts label l. This means we can use it as a condition for checking the possibility of predicting label l.

Formally, given an incomplete dataset $\mathcal{D} = \{(C_i, y_i) : i = 1, ..., N\}$, a test data point $t \in \mathcal{X}$, a label $l \in \mathcal{Y}$ and a similarity function κ, the l-expreme possible world $E_{l,\mathcal{D}}$ is defined as:

$$E_{l,\mathcal{D}} = \{(M_i, y_i) : (C_i, y_i) \in \mathcal{D}\}$$
$$M_i = \begin{cases} \arg\max\limits_{x_{i,j} \in C_i} \kappa(x_{i,j}, t), & \text{if } y_i = l, \\ \arg\min\limits_{x_{i,j} \in C_i} \kappa(x_{i,j}, t), & \text{otherwise} \end{cases} \tag{A.1}$$

The answer to $Q1(\mathcal{D}, t, l)$ is then obtained by checking if: (1) K-NN trained over $E_{l,\mathcal{D}}$ predicts l, and (2) for all other labels $l' \in \mathcal{Y} \setminus \{l\}$, K-NN trained over $E_{l',\mathcal{D}}$ does not predict l.

Since the construction of the l-extreme world can be done in $O(N \cdot M)$ time and the checking can be done in $O(N)$, the total complexity is $O(N \cdot M)$.

Example A.1. In Figure A.1 we can see an example scenario illustrating the MM algorithm for $K = 3$. On the left, we have an incomplete dataset with $N = 6$ examples, each with $M = 4$ candidates. We construct l-extreme worlds for both $l = 0$ and $l = 1$, by picking the candidate with maximal similarity when $y_i = l$ and the candidate with minimal similarity when $y_i \neq l$. We can see visually that any other choice of candidate could not reduce the odds of l being predicted. In this scenario, we can see that both

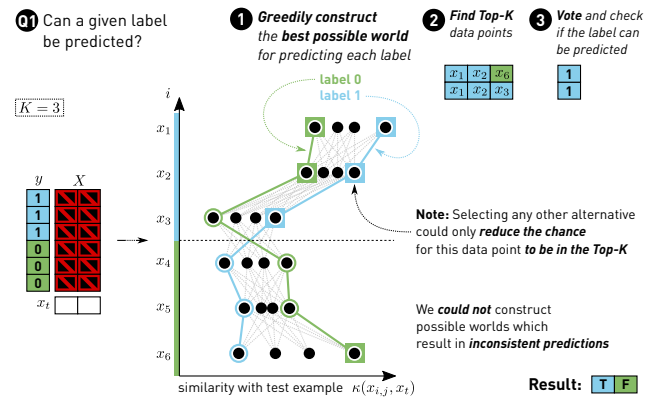

Figure A.1: Illustration of MM when $K = 3$ for $Q1$.

l-extreme worlds predict label 1, which means that we can conclude that label 1 can be *certainly predicted.*

A.1 Proof of Correctness

Lemma A.2. *Let $D^{(1)}, D^{(2)} \in \mathcal{I}_{\mathcal{D}}$ be two possible worlds generated from an incomplete dataset $\mathcal{D}$. Given a test example $t \in \mathcal{X}$ and label $l \in \mathcal{Y}$ where $|\mathcal{Y}| = 2$, let $R_{t,l}$ be a partial ordering relation defined as:*

$$R_{t,l}\left(D^{(1)}, D^{(2)}\right) := \bigwedge_{i=1}^{N} \left(y_i = l \ \wedge \ \kappa(x_i^{(1)}, t) \leq \kappa(x_i^{(2)}, t)\right) \vee \left(y_i \neq l \ \wedge \ \kappa(x_i^{(1)}, t) \geq \kappa(x_i^{(2)}, t)\right).$$

Then, the following relationship holds:

$$R_{t,l}\left(D^{(1)}, D^{(2)}\right) \implies \left(\left(\mathcal{A}_{D^{(1)}}(t) = l\right) \implies \left(\mathcal{A}_{D^{(2)}}(t) = l\right)\right).$$

Proof. We will prove this by contradiction. Consider the case when $\mathcal{A}_{D^{(1)}}(t) = l$ and $\mathcal{A}_{D^{(2)}}(t) \neq l$, that is, possible world $D^{(1)}$ predicts label l but possible world $D^{(2)}$ predicts some other label $l' \neq l$. That means that in the top-K induced by $D^{(2)}$ has to be at least one more data point with label l' than in the top-K induced by $D^{(1)}$. Is it possible for the premise to be true?

The similarities $\kappa(x_i^{(1)}, t)$ and $\kappa(x_i^{(2)}, t)$ cannot all be equal because that would represent equal possible worlds and that would trivially contradict with the premise since the labels predicted by equal possible worlds cannot differ. Therefore, at least one of the $i = 1, ..., N$ inequalities has to be strict. There, we distinguish three possible cases with respect to the class label y_i of the i-th example:

(1) $y_i = l$: This means that the similarity of a data point coming from $D^{(2)}$ is higher than the one coming from $D^{(1)}$. However, this could only elevate that data point in the similarity-based ordering and could only increase the number of data points with label l in the top-K. Since $\mathcal{A}_{D^{(1)}}(t) = l$, the prediction of $D^{(2)}$ cannot be different, which **contradicts** the premise.
(2) $y_i = l' \neq l$ and $|\mathcal{Y}| = 2$: We have a data point with a label different from l with lowered similarity, which means it can only drop in the ordering. This can not cause an increase of data points with label l' in the top-K, which again **contradicts** the premise.

(3) $y_i = l' \neq l$ and $|\mathcal{Y}| \geq 2$: Here we again have a data point with label l' with lowered similarity. However, if that data point were to drop out of the top-K, it would have been possible for a data point with a third label $l'' \notin \{l, l'\}$ to enter the top-K and potentially tip the voting balance in factor of this third label l'' (assuming there are enough instances of that label in the top-K already). This would **not contradict** the premise. However, since the lemma is defined for $|\mathcal{Y}| = 2$, this third case can actually never occur.

Finally, for $|\mathcal{Y}| = 2$, we can conclude that our proof by contradiction is complete. □

Lemma A.3. *Let $E_{l,\mathcal{D}}$ be the l-extreme world defined in Equation A.1. Then, the K-NN algorithm trained over $E_{l,\mathcal{D}}$ will predict label l if and only if there exists a possible world $D \in \mathcal{I}_{\mathcal{D}}$ that will predict label l.*

Proof. We consider the following two cases:

(1) $\mathcal{A}_{E_{l,\mathcal{D}}}(t) = l$: Since $E_{l,\mathcal{D}} \in \mathcal{I}_{\mathcal{D}}$, the successful prediction of label l represents a trivial proof of the existence of a possible world that predicts l.

(2) $\mathcal{A}_{E_{l,\mathcal{D}}}(t) \neq l$: We can see that $E_{l,\mathcal{D}}$ is unique because it is constructed by taking from each candidate set C_i the minimal/maximal element, which itself is always unique (resulting from the problem setup laid out in Section 3.1.1). Consequently, the relation $R_{t,l}(D, E_{l,\mathcal{D}})$ holds for every $D \in \mathcal{I}_{\mathcal{D}}$. Given Lemma A.2, we can say that if there exists any $D \in \mathcal{I}_{\mathcal{D}}$ that will predict l, then it is impossible for $E_{l,\mathcal{D}}$ to not predict l. Conversely, we can conclude that if $E_{l,\mathcal{D}}$ does not predict l, then no other possible world can predict l either.

□

Theorem A.4. *The MM algorithm correctly answers $Q1(\mathcal{D}, t, l)$.*

Proof. The MM algorithm simply constructs the l'-extreme world $E_{l',\mathcal{D}}$ for each label $l' \in \mathcal{Y}$ and runs K-NN over it to check if it will predict l'. Given Lemma A.3, we can conclude that this test is sufficient to check if there exists a possible world that can predict label l'. Then, the algorithm simply checks if l is the only label that can be predicted. We can trivially accept that this always gives the correct answer given that it is an exhaustive approach. □

B THE SS ALGORITHM FOR Q2

Algorithm Outline. The SS algorithm answers the counting query according to the following expression:

$$Q2(\mathcal{D}, t, l) = \sum_{i \in [N]} \sum_{j \in [M]} \sum_{\gamma \in \Gamma} \mathbb{I}[l = \arg\max(\gamma)] \cdot Support(i, j, \gamma) \tag{B.1}$$

Here, we iterate over all $i = 1, ..., N$ candidate sets C_i, all their $j = 1, ..., M$ candidates $x_{i,j} \in C_i$, and all possible tally vectors $\gamma \in \Gamma$. In each iteration we check if the winning label induced by tally vector γ is the label l which we are querying for. If yes, we include the label tally support into the count. An example of this iteration is depicted in the lower right table in Figure B.1.

The *label tally support* $Support(i, j, \gamma)$ is the number of possible worlds from the boundary set $BSet(i, j; K)$ where the tally of the labels in the top-K is exactly γ. The boundary set $BSet(i, j; K)$ is

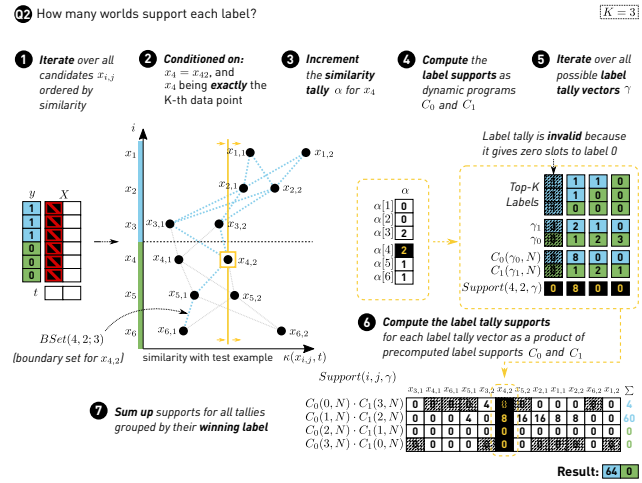

Figure B.1: Illustration of SS when $K = 3$ for $Q2$.

the set of possible worlds where the value of example x_i is taken to be $x_i = x_{i,j}$ *and* x_i is exactly the K-th most similar example to the test example t. Given a label tally γ, its label tally support is computed as:

$$Support(i, j, \gamma) = \prod_{l \in \mathcal{Y}} C_l^{i,j}(\gamma_l, N). \tag{B.2}$$

Here, $C_l^{i,j}(\gamma_l, N)$ is the *label support* for label l, which is the number of possible worlds from the *boundary set* $BSet(i, j; K)$ having exactly γ_l examples in the top-K. Computing the label support is performed by using the following recursive structure:

$$C_l^{i,j}(c, n) = \begin{cases} C_l^{i,j}(c, n-1), & \text{if } y_n \neq l, \\ C_l^{i,j}(c-1, n-1), & \text{if } x_n = x_i, \text{otherwise} \\ \alpha_{i,j}[n] C_l^{i,j}(c, n-1) + (M - \alpha_{i,j}[n]) C_l^{i,j}(c-1, n-1). \end{cases}$$

This recursion can be computed as a dynamic program, defined over $c \in \{0...K\}$ and $n \in \{1...N\}$. Its boundary conditions are $C_l^{i,j}(-1, n) = 0$ and $C_l^{i,j}(c, 0) = 1$. To compute the support, it uses similarity tallies α, defined as such:

$$\alpha_{i,j}[n] = \sum_{m=1}^{M} \mathbb{I}[\kappa(x_{n,m}, t) \leq \kappa(x_{i,j}, t)].$$

B.1 The General Form of SS Algorithm

In the general case, the algorithm follows a similar intuition as the case of $K = 1$ and $|\mathcal{Y}| = 2$. We enumerate each possible candidate value $x_{i,j}$. For each candidate value, we enumerate all possible values of the label tally vector; for each such vector, we compute its support. Let Γ be the set of all possible label tally vectors, we have

$$Q2(\mathcal{D}, t, l) = \sum_{i \in [N]} \sum_{j \in [M]} \sum_{\gamma \in \Gamma} \mathbb{I}[l = \arg\max(\gamma)] \cdot Support(i, j, \gamma).$$

We know that there are $|\Gamma| = O\left(\binom{|\mathcal{Y}|+K-1}{K}\right)$ many possible configurations of the label tally vector, and for each of them, we can compute the support $Support(i, j, \gamma)$ in $O(NM|\mathcal{Y}|)$ time. As a result, a naive implementation of the above algorithm would take $O(N^2 M^2 |\mathcal{Y}| \binom{|\mathcal{Y}|+K-1}{K})$ time.

Algorithm B.1 Algorithm **SS** for Answering Q2 with K-NN.

Input: $\mathcal{D}$, incomplete dataset; t, target data point.
Output: r, integer vector, s.t. $r[y] = Q2(\mathcal{D}, t, y), \forall y \in \mathcal{Y}$.

1: $s \leftarrow \texttt{kernel}(\mathcal{D}, t)$;
2: $\alpha \leftarrow zeros(|\mathcal{D}|)$;
3: $r \leftarrow zeros(|\mathcal{Y}|)$;
4: **for all** $(i, j) \in \texttt{argsort}(s)$ **do**
5: $\quad \alpha[i] \leftarrow \alpha[i] + 1$; // (See Equation (1))
6: $\quad$ **for all** $l \in \mathcal{Y}$ **do**
7: $\quad\quad$ **for all** $k \in [K]$ **do**
8: $\quad\quad\quad$ Compute $C_l^{i,j}(k, N)$.
9: $\quad$ **for all** possible valid tally vectors $\gamma \in \Gamma$ **do**
10: $\quad\quad y_p \leftarrow \texttt{argmax}(\gamma)$;
11: $\quad\quad$ Compute $Support(i, j, \gamma) = \prod_{l \in \mathcal{Y}} C_l^{i,j}(\gamma_l, N)$;
12: $\quad\quad r[y_p] \leftarrow r[y_p] + Support(i, j, \gamma)$;
13: **return** r;

Efficient Implementation. We can implement the above procedure in a more efficient way, as illustrated in Algorithm B.1. Similar to the case of $K = 1$, we iterate over all values $x_{i,j}$ in the order of increasing similarity (line 4). This way, we are able to maintain, efficiently, the similarity tally vector $\alpha_{i,j}$ (line 5). We then pre-compute the result of $K|\mathcal{Y}|$ many dynamic programming procedures (lines 6-8), which will be used to compute the support for each possible tally vector later. We iterate over all valid label tally vectors, where a valid tally vector $\gamma \in \Gamma$ contains all integer vectors whose entries sum up to K (line 9). For each tally vector, we get its prediction y_p (line 10). We then calculate its support (line 11) and add it to the number of possible worlds with y_p as the prediction (line 12).

(Complexity) We analyze the complexity of Algorithm B.1:

- The sorting procedure requires $O(N \cdot M \log N \cdot M)$ steps as it sorts all elements of S.
- The outer loop iterates over $O(N \cdot M)$ elements.
- In each inner iteration, we need to compute $|\mathcal{Y}|$ sets of dynamic programs, each of which has a combined state space of size $N \cdot K$.
- Furthermore, in each iteration, we iterate over all possible label assignments, which requires $O\left(\binom{|\mathcal{Y}|+K-1}{K}\right)$ operations.
- For each label assignment, we need $O(|\mathcal{Y}|)$ multiplications.

The time complexity is therefore the sum of $O(N \cdot M \log(N \cdot M))$ and $O(N \cdot M \cdot (N \cdot K + |\mathcal{Y}| + \binom{|\mathcal{Y}|+K-1}{K}))$.

B.2 Proof of Correctness

Theorem B.1. *The SS algorithm correctly answers $Q2(\mathcal{D}, t, l)$.*

Proof. The SS algorithm aims to solve a counting problem by using a technique of partitioning a set and then computing the sizes of the relevant partitions. To prove its correctness we need to: (1) argue that the partitioning procedure is valid and produces disjoint subsets of the original set; and (2) argue that the size of the subset is computed correctly.

To prove validity of the partitioning method, we start by reviewing how a brute-force approach would answer the same query:

$$Q2(\mathcal{D}, t, l) = \sum_{D \in \mathcal{D}} \mathbb{I}[\mathcal{A}_D(t) = l].$$

When we partition the sum over all possible worlds into boundary sets $BSet(i, j; K)$ for each $i \in 1...N$ and $j \in 1...M$, we obtain the following expression:

$$Q2(\mathcal{D}, t, l) = \sum_{i \in [N]} \sum_{j \in [M]} \sum_{D \in BSet(i,j;K)} \mathbb{I}[\mathcal{A}_D(t) = l].$$

As we mentioned, a boundary set is the set of the possible worlds where $x_i = x_{i,j}$ and x_i is the K-th most similar data example to t. Since every possible world selects just one candidate per candidate set, for every $i \in \{1...N\}$, the possible world where $x_i = x_{i,j}$ is always different from the possible world where $x_i = x_{i,j'}$, for every $j, j' \in \{1...M\}$ such that $j \neq j'$. Furthermore, every possible world induces a fixed ordering of data examples based on their similarity to t. Therefore, any possible worlds where x_i occupies the K-th position in that ordering is different from the possible world where it occupies any other position. Thus, we can conclude that all boundary sets $BSet(i, j, K)$ are distinct for distinct i and j.

Given that we are dealing with the K-NN algorithm, since each possible world D induces a fixed set of top-K examples, consequently it induces a fixed top-K label tally γ^D. Since only one label tally of all the possible ones will be correct one, we can rewrite the inner sum as

$$Q2(\mathcal{D}, t, l) = \sum_{i \in [N]} \sum_{j \in [M]} \sum_{D \in BSet(i,j;K)} \sum_{\gamma \in \Gamma} \mathbb{I}[\gamma^D = \gamma] \mathbb{I}[l = \arg\max \gamma].$$

Since in the above expression, the γ is independent from D, we can reorganize the sums as

$$Q2(\mathcal{D}, t, l) = \sum_{i \in [N]} \sum_{j \in [M]} \sum_{\gamma \in \Gamma} \mathbb{I}[l = \arg\max \gamma] \sum_{D \in BSet(i,j;K)} \mathbb{I}[\gamma^D = \gamma].$$

We can notice that the innermost sum is equivalent to the definition of a label tally support, which means we can replace it as

$$Q2(\mathcal{D}, t, l) = \sum_{i \in [N]} \sum_{j \in [M]} \sum_{\gamma \in \Gamma} \mathbb{I}[l = \arg\max(\gamma)] \cdot Support(i, j, \gamma).$$

Assuming that the label tally support $Support(i, j, \gamma)$ is computed correctly, as shown in Section 3.1.1, we can conclude that both the partitioning and the partition size computation problems are solved correctly, hence proving our original claim. □

B.3 Optimization Using Divide and Conquer

Algorithm Outline. This version of the algorithm is almost identical to the original SS algorithm described previously, except for the way it computes the label support. Namely, in the original algorithm we were using the dynamic program $C_l^{i,j}(c, n)$ to return the number of possible worlds in the boundary set $BSet(i, j; K)$ that support having exactly c examples in the top-K. Here, the parameter $n \in \{1...N\}$ denoted that we were only considering the subset of candidate sets C_i where $i \in \{1...n\}$.

If we observe Algorithm B.1, we can see that the dynamic program $C_l^{i,j}(c, n)$ is re-computed in every iteration of the outer loop. However, at the same time we can see that the similarity tally α, which is used to compute the dynamic program, gets only one of its

elements updated. To take advantage of that, we apply divide-and-conquer and redefine the recurrence relation as a tree structure:

$$T_l^{i,j}(c,a,b) = \sum_{k=0}^{c} T_l^{i,j}(k,a,m) \cdot T_l^{i,j}(c-k,a+1,b), \quad \text{where } m = \lfloor \frac{a+b}{2} \rfloor. \tag{B.3}$$

To efficiently maintain the dynamic program $T_l^{i,j}$ across iterations over (i,j), we organize it in a binary tree structure. Each node, denoted as $n_{a,b}$, contains a list of values of $T_l^{i,j}(c,a,b)$ for all $c \in \{0...K\}$. Its two children are $n_{a,m}$ and $n_{m+1,b}$ where $m = \lfloor \frac{a+b}{2} \rfloor$. The leaves are nodes $n_{a,a}$ with both indices equal, which get evaluated according to the following base conditions:

(1) $T_l^{i,j}(c,a,a) = 1$, if $y_a \neq l$;
Rationale: Skip examples with label different from l.
(2) $T_l^{i,j}(0,i,i) = 0$ and $T_l^{i,j}(1,i,i) = 1$;
Rationale: The i-th example must be in the top-K, unless it got skipped.
(3) $T_l^{i,j}(0,a,a) = \alpha[a]$;
Rationale: If the a-th example is in the top-K, there are $\alpha[a]$ candidates to choose from.
(4) $T_l^{i,j}(1,a,a) = M - \alpha[a]$;
Rationale: If the a-th example is not in the top-K, there are $M - \alpha[a]$ candidates to choose from.
(5) $T_l^{i,j}(c,a,a) = 0$, if $c \notin \{0,1\}$
Rationale: Invalid case because an example can either be $(c = 1)$ or not be $(c = 0)$ in the top-K.

The leaf nodes $n_{a,a}$ of this tree correspond to label support coming from individual data examples. The internal nodes $n_{a,b}$ correspond to the label support computed over all leaves in their respective sub-trees. This corresponds to data examples with index $i \in \{a...b\}$. The root node $n_{1,N}$ contains the label support computed over all data examples.

Since between any two consecutive iterations of (i,j) in Algorithm B.1 we only update the i-th element of the similarity tally α, we can notice that out of all leaves in our binary tree, only $n_{i,i}$ gets updated. This impacts only $O(N)$ internal nodes which are direct ancestors to that leaf. If we update only those nodes, we can avoid recomputing the entire dynamic program. The full algorithm is listed in Algorithm B.2.

Complexity. We analyze the complexity of Algorithm B.2:

- The sorting procedure requires $O(N \cdot M \log N \cdot M)$ steps as it sorts all elements of S.
- The tree initialization can be performed eagerly in $O(KN)$ time, or lazily in constant amortized time.
- The outer loop iterates over $O(N \cdot M)$ elements.
- In each inner iteration, we update $O(\log N)$ nodes. Each node maintains support values for all $c \in \{1...K\}$ and each one takes $O(K)$ to recompute. Therefore, the tree update can be performed in $O(K^2 \log N)$ time.
- Furthermore, in each iteration, we iterate over all possible label assignments, which requires $O\left(\binom{|\mathcal{Y}|+K-1}{K}\right)$ operations.
- For each label assignment, we need $O(|\mathcal{Y}|)$ multiplications.

Algorithm B.2 Algorithm **SS-DC** for Q2 with K-NN.

Input: $\mathcal{D}$, incomplete dataset; t, target data point.
Output: r, integer vector, s.t. $r[y] = Q2(\mathcal{D}, t, y), \forall y \in \mathcal{Y}$.

```
s ← kernel(D, t);
α ← zeros(|D|);
r ← zeros(|Y|);
for all l ∈ Y do
    for all k ∈ [K] do
        Initialize the tree T_l(k, 1, N).
for all (i, j) ∈ argsort(s) do
    α[i] ← α[i] + 1;
    Update the leaf node T_{y_i}(c, i, i) and its ancestors for all c ∈ {1...K}.
    for all possible valid tally vectors γ ∈ Γ do
        y_p ← argmax(γ);
        Compute Support(i, j, γ) = I[γ_{y_i} ≥ 1] · ∏_{l∈Y} T_l(γ_l, 1, N);

        r[y_p] ← r[y_p] + Support(i, j, γ);
return r;
```

This renders the final complexity to be the sum of $O(N \cdot M \cdot (\log(N \cdot M) + K^2 \cdot \log N))$ and $O(N \cdot M \cdot (|\mathcal{Y}| + \binom{|\mathcal{Y}|+K-1}{K}))$. When $|\mathcal{Y}|$ and K are relatively small constants, this reduces to $O(N \cdot M \cdot \log(N \cdot M))$.

B.4 Optimization for Multiple Invocations

The goal of this optimization is to efficiently handle the scenario defined in Algorithm 1 describing our **CPClean** method. In this method we apply invocations to $Q2$ multiple times in order to compute the information gain after cleaning individual data examples. Specifically, given an incomplete training dataset $\mathcal{D}$ with N candidate sets each consisting of up to M possible candidate feature vectors, we iterate over all $n \in \{1...N\}$ and $m \in \{1...M\}$ and compute $Q2$ for an altered incomplete dataset $\mathcal{D}^{(n,m)}$ obtained from $\mathcal{D}$ by replacing the candidate set $C_n = \{x_{n,1}, x_{n,2}, ...\}$ with $C_n^{(n,m)} = \{x_{n,m}\}$. We end up invoking the same algorithm $O(N \cdot M)$ times with little change in $\mathcal{D}'$ between consecutive invocations.

Algorithm Outline. This version of the algorithm takes advantage of the structure of the dynamic program $C_l^{i,j}(c,n)$. Namely, that $C_l^{i,j}(c,n)$ contains the support for label l given that $x_i = x_{i,j}$ computed over the first n data examples (i.e. over all C_i where $i \in \{1...n\}$). We notice that if we simply reverse the order by which we visit the data examples, we can end up with a dynamic program $\bar{C}_l^{i,j}(c,n)$ which is computed over all C_i where $i \in \{n...N\}$. Here we have an equivalence between $C_l^{i,j}(c,N)$ and $\bar{C}_l^{i,j}(c,1)$.

Furthermore, since in our scenario we are dealing with the incomplete dataset $\mathcal{D}^{(n,m)}$, we know that the vector α we use in our SS algorithm will contain at position n one of two possible values $\alpha[n] = 0$ or $\alpha[n] = 1$, depending on whether or not $x_{i,j}$ comes before $x_{n,m}$ in the similarity-based sort order.

Putting these things together, we notice that we can compute $C_l^{i,j}(c,N)$ for $\mathcal{D}^{(n,m)}$ as follows:

$$C_l^{i,j}(c,N) = \sum_{k=0}^{b(c)} C_l^{i,j}(k,n-1) \cdot \bar{C}_l^{i,j}(b(c)-k,n+1).$$

Algorithm B.3 Algorithm **SS-BDP** for Q2 with K-NN.

Input: $\mathcal{D}'$, incomplete dataset obtained from $\mathcal{D}$ by replacing C_n with $C'_n = \{x_{n,m}\}$; t, target data point;
precomputed DP matrices $C_l^{i,j}$ and $\bar{C}_l^{i,j}$ for all $i \in \{1...N\}$, $j \in \{1...M\}$ and $l \in \mathcal{Y}$.
Output: r, integer vector, s.t. $r[y] = Q2(\mathcal{D}, t, y), \forall y \in \mathcal{Y}$.

$s \leftarrow \texttt{kernel}(\mathcal{D}, t)$;
$r \leftarrow zeros(|\mathcal{Y}|)$;
for all $(i, j) \in \texttt{argsort}(s)$ **do**
  if $i == n$ **and** $j \neq m$ **then**
    continue
  for all $l \in \mathcal{Y}$ **do**
    for all $k \in [K]$ **do**
      $b \leftarrow k - \mathbb{I}[s_{i,j} \leq s_{n,m}]$;
      $\hat{C}_l^{i,j}(k) \leftarrow \sum_{c=0}^{b} C_l^{i,j}(c, n-1) \cdot \bar{C}_l^{i,j}(b-c, n+1)$;
  for all possible valid tally vectors $\gamma \in \Gamma$ **do**
    $y_p \leftarrow \texttt{argmax}(\gamma)$;
    Compute $Support(i, j, \gamma) = \mathbb{I}[\gamma_{y_i} \geq 1] \cdot \prod_{l \in \mathcal{Y}} \hat{C}_l^{i,j}(\gamma_l)$;
    $r[y_p] \leftarrow r[y_p] + Support(i, j, \gamma)$;
return r;

Given that we have c slots to fill, we are partitioning $\mathcal{D}^{(n,m)}$ into data examples with index strictly less than n and data examples with index strictly greater than n. We then simply consider all possible ways to split the available slots among these two partitions. When computing $C_l^{i,j}$, we know $x_{i,j}$ is the K-th most similar data example and $C_n^{(n,m)} = \{x_{n,m}\}$ has only one candidate. Therefore, we know that the n-th data example is either surely going to be in the top-K, or it is surely going to be out, depending on whether its similarity score is higher than the one of $x_{i,j}$. We use $b(c) = c - \mathbb{I}[s_{i,j} \leq s_{n,m}]$ to represent our budget of available slots to fill given the mentioned condition. Note that since other candidates for the n-th data example are removed in $\mathcal{D}^{(n,m)}$, the support related to these candidates (i.e., $i = n$ and $j \neq m$) should be skipped.

The strategy of our algorithm is to precompute the dynamic programs $C_l^{i,j}$ and $\bar{C}_l^{i,j}$ for all $i \in \{1...N\}$, $j \in \{1...M\}$ and $l \in \mathcal{Y}$. Then we use these precomputed dynamic programs to efficiently compute the label support. The full algorithm, which we refer to as *bidirectional dynamic program* (BDP), is listed in Algorithm B.3.

Complexity. In terms of complexity, Algorithm B.3 makes savings by avoiding the computation of the dynamic programs. Each invocation therefore takes $O(N \cdot M \log(N \cdot M))$ assuming K and $|\mathcal{Y}|$ are relatively small constants. If we use caching to avoid sorting the similarity matrix each time, we end up with complexity $O(N \cdot M)$. Of course, precomputing the dynamic programs still takes as much time as for Algorithm B.1, which is $O(N \cdot M \log(N \cdot M) + N^2 \cdot M)$.

However, the real savings come with multiple invocations. Namely, to estimate information gain, we need to invoke the same algorithm $O(N \cdot M)$ times, which would make take $O(N^2 \cdot M^2 \log(N \cdot M) + N^3 \cdot M^2)$ time without our optimization. With our optimization it takes only $O(N^2 \cdot M^2)$ time.

B.5 Polynomial Time Solution for $|\mathcal{Y}| \geq 1$

We have seen that the previously described version of the SS algorithm gives an efficient polynomial solution for $Q2$, but only for a relatively small number of classes $|\mathcal{Y}|$. When $|\mathcal{Y}| \gg 1$, the $O(\binom{|\mathcal{Y}|+K-1}{K})$ factor of the complexity starts to dominate. For a very large number of classes (which is the case for example in the popular ImageNet dataset), running this algorithm becomes practically infeasible. In this section we present a solution for $Q2$ which is polynomial in $|\mathcal{Y}|$.

The main source of computational complexity in Algorithm B.2 is in the for-loop starting at line 10. Here we iterate over all possible tally vectors γ, and for each one we compute the label tally support $Support(i, j, \gamma)$ (line 12) and add it to the resulting sum (line 13) which is selected according to the winning label with the largest tally in γ (line 11).

The key observation is that, for l to be the winning label, one only needs to ensure that no other label has a larger label tally. In other words, label l will be predicted whenever $\gamma_l > \gamma_{l'}$ for all $l \neq l'$, regardless of the actual tallies of all l'. Therefore, we found that we can group all the label tally vectors according to this predicate. To achieve this, we define the following recurrence:

$$D_{Y,c}(j, k) = \sum_{n=0}^{\min\{c,k\}} T_{Y_j}(n, 1, N) \cdot D_{Y,c}(j+1, k-l). \tag{B.4}$$

Here Y is the list of all labels in $\mathcal{Y} \setminus \{l\}$ and $T_{Y_j}^{i,j}(n, 1, N)$ is the label support for label Y_j, as described in the previous section. The semantics of $D_{Y,c}(j, k)$ is the number of possible worlds where the top-K contains at most k examples with labels $l' \in Y_{0...j}$ and no label has tally above c. We can see that $D_{Y,c}(j, k)$ can also be computed as a dynamic program with base conditions $D_{Y,c}(|Y|, 0) = 1$ and $D_{Y,c}(|Y|, k) = 0$ for $k > 0$.

Algorithm B.4 Algorithm **SS-DC-MC** for Q2 with K-NN.

Input: $\mathcal{D}$, incomplete dataset; t, target data point.
Output: r, integer vector, s.t. $r[y] = Q2(\mathcal{D}, t, y), \forall y \in \mathcal{Y}$.

1: $s \leftarrow \texttt{kernel}(\mathcal{D}, t)$;
2: $\alpha \leftarrow zeros(|\mathcal{D}|)$;
3: $r \leftarrow zeros(|\mathcal{Y}|)$;
4: **for all** $l \in \mathcal{Y}$ **do**
5: **for all** $k \in [K]$ **do**
6: Initialize the tree $T_l(k, 1, N)$.
7: **for all** $(i, j) \in \texttt{argsort}(s)$ **do**
8: $\alpha[i] \leftarrow \alpha[i] + 1$;
9: Update the leaf node $T_{y_i}(c, i, i)$ and its ancestors for all $c \in \{1...K\}$.
10: **for all** $l \in \mathcal{Y}$ **do**
11: $Y \leftarrow [\mathcal{Y} \setminus \{l\}]$;
12: **for all** $c \in \{1...K\}$ **do**
13: Compute $D_{Y,c}(|\mathcal{Y}| - 1, K - c - 1)$ using dynamic programming;
14: $r[y_p] \leftarrow r[y_p] + T_l(c, 1, N) \cdot D_{Y,c}(|\mathcal{Y}| - 1, K - c - 1)$;
15: **return** r;

In terms of performance, the complexity of Algorithm B.4, compared to Algorithm B.2 has one more major source of time complexity, which is the computation of the dynamic program $D_{Y,c}$ which takes $O(|\mathcal{Y}| \cdot K^2)$ time. Since the for loops in lines 10 and 12 take $O(|\mathcal{Y}|)$ and $O(K)$ time respectively, the overall complexity of the algorithm becomes $O(M \cdot N \cdot (\log(M \cdot N) + K^2 \log N + |\mathcal{Y}|^2 \cdot K^3)$.

C THE CPCLEAN ALGORITHM

C.1 Theoretical Guarantee

We begin with the following supplementary results.

Lemma C.1. *Let D_{Opt} be the optimal set of size t described in Corollary 4.2. Denote the set of cleaned training data instances of size T by D_π. For $\mathbf{c}_{Opt_i} \in D_{Opt}, i = \{1, 2, \ldots, t\}$, we have*

$$\begin{aligned} &I(\mathcal{A}_{\mathbf{D}}(D_{val}); \mathbf{c}_{Opt_j} | \mathbf{c}_{Opt_{j-1}}, \ldots, \mathbf{c}_{Opt_1}, D_\pi) \\ &\leq \theta \min\{\log |\mathcal{Y}|, \log m\} I(\mathcal{A}_{\mathbf{D}}(D_{val}); \mathbf{c}_{\pi_{t+1}} | D_\pi). \end{aligned} \tag{C.1}$$

where $\theta = \frac{1}{\max_{\mathbf{v} \in D_{train}} I(\mathcal{A}_{\mathbf{D}}(D_{val}); \mathbf{v})}$.

Proof. We first start with the following inequality:

$$\begin{aligned} &I(\mathcal{A}_{\mathbf{D}}(D_{\text{val}}); \mathbf{c}_{\text{Opt}_j} | \mathbf{c}_{\text{Opt}_{j-1}}, ..., \mathbf{c}_{\text{Opt}_1}, D_\pi) \\ &= \frac{I(\mathcal{A}_{\mathbf{D}}(D_{\text{val}}); \mathbf{c}_{\text{Opt}_j} | \mathbf{c}_{\text{Opt}_{j-1}}, ..., \mathbf{c}_{\text{Opt}_1}, D_\pi)}{\max_{\mathbf{v}} I(\mathcal{A}_{\mathbf{D}}(D_{\text{val}}); \mathbf{v} | D_\pi)} \max_{\mathbf{v}} I(\mathcal{A}_{\mathbf{D}}(D_{\text{val}}); \mathbf{v} | D_\pi) \\ &\leq \frac{\min\{\log |\mathcal{Y}|, \log m\}}{\max_{\mathbf{v}} I(\mathcal{A}_{\mathbf{D}}(D_{\text{val}}); \mathbf{v} | D_\pi)} I(\mathcal{A}_{\mathbf{D}}(D_{\text{val}}); \mathbf{c}_{\text{Opt}_j} | D_\pi) \end{aligned} \tag{C.2}$$

where the last inequality follows from

$$\begin{aligned} &I(\mathcal{A}_{\mathbf{D}}(D_{\text{val}}); \mathbf{c}_{\text{Opt}_j} | \mathbf{c}_{\text{Opt}_{j-1}}, ..., \mathbf{c}_{\text{Opt}_1}, D_\pi) \\ &\leq \min\{\mathcal{H}(\mathcal{A}_{\mathbf{D}}(D_{\text{val}})), \mathcal{H}(\mathbf{c}_{\text{Opt}_j})\} \\ &\leq \min\{\log |\mathcal{Y}|, \log m\}. \end{aligned}$$

Let $\mathbf{v}^* = \arg\max_{\mathbf{v} \in D_{\text{train}}} I(\mathcal{A}_{\mathbf{D}}(D_{\text{val}}); \mathbf{v})$. We have

$$\begin{aligned} \max_{\mathbf{c}_{\text{Opt}_j}} I(\mathcal{A}_{\mathbf{D}}(D_{\text{val}}); \mathbf{c}_{\text{Opt}_j} | D_\pi) &\geq I(\mathcal{A}_{\mathbf{D}}(D_{\text{val}}); \mathbf{v}^* | D_\pi) \\ &\geq I(\mathcal{A}_{\mathbf{D}}(D_{\text{val}}); \mathbf{v}^*) \end{aligned} \tag{C.3}$$

where the last inequality follows from the independence of $\mathbf{v}_i$'s in D_{train}. That is,

$$\begin{aligned} &I(\mathcal{A}_{\mathbf{D}}(D_{\text{val}}), D_\pi; \mathbf{v}^*) \\ &= I(\mathcal{A}_{\mathbf{D}}(D_{\text{val}}); \mathbf{v}^*) + I(D_\pi^{[l]}; \mathbf{v}^* | \mathcal{A}_{\mathbf{D}}(D_{\text{val}})) \\ &= I(\mathcal{A}_{\mathbf{D}}(D_{\text{val}}); \mathbf{v}^* | D_\pi) + I(D_\pi^{[l]}; \mathbf{v}^*). \end{aligned}$$

The independence of $\mathbf{v}_i$'s implies that $I(D_\pi; \mathbf{v}^*) = 0$ hence (C.3).

In the next step, we let $\theta = \frac{1}{I(\mathcal{A}_{\mathbf{D}}(D_{\text{val}}); \mathbf{v}^*)}$ where $\mathbf{v}^* = \arg\max_{\mathbf{v} \in D_{\text{train}}} I(\mathcal{A}_{\mathbf{D}}(D_{\text{val}}); \mathbf{v})$. Combining (C.2) and (C.3),

$$\begin{aligned} &I(\mathcal{A}_{\mathbf{D}}(D_{\text{val}}); \mathbf{c}_{\text{Opt}_j} | \mathbf{c}_{\text{Opt}_{j-1}}, ..., \mathbf{c}_{\text{Opt}_1}, D_\pi) \\ &\leq \theta \min\{\log |\mathcal{Y}|, \log m\} \max_{\mathbf{v}} I(\mathcal{A}_{\mathbf{D}}(D_{\text{val}}); \mathbf{v} | D_\pi). \end{aligned} \tag{C.4}$$

We remind that our update rule is simply

$$\mathbf{c}_{\pi_{T+1}} := \{\arg\max_{\mathbf{v}} I(\mathcal{A}_{\mathbf{D}}(D_{\text{val}}); \mathbf{v} | D_\pi)\}.$$

Inserting this into (C.4) proves the Lemma. □

We now move to the proof of Corollary 4.2.

Proof. We start by noting that

$$\mathcal{H}(\mathcal{A}_{\mathbf{D}}(D_{\text{val}}) | D_{\text{Opt}}) \geq \mathcal{H}(\mathcal{A}_{\mathbf{D}}(D_{\text{val}}) | D_{\text{Opt}}, D_\pi).$$

We also note

$$\begin{aligned} &\mathcal{I}(\mathcal{A}_{\mathbf{D}}(D_{\text{val}}); D_{\text{Opt}}) = \mathcal{H}(\mathcal{A}_{\mathbf{D}}(D_{\text{val}})) - \mathcal{H}(\mathcal{A}_{\mathbf{D}}(D_{\text{val}}) | D_{\text{Opt}}) \\ &\mathcal{I}(\mathcal{A}_{\mathbf{D}}(D_{\text{val}}); D_{\text{Opt}}, D_\pi) = \mathcal{H}(\mathcal{A}_{\mathbf{D}}(D_{\text{val}})) \\ &\qquad - \mathcal{H}(h\mathcal{A}_{\mathbf{D}}(D_{\text{val}}) | D_{\text{Opt}}, D_\pi). \end{aligned}$$

Hence

$$I(\mathcal{A}_{\mathbf{D}}(D_{\text{val}}); D_{\text{Opt}}) \leq I(\mathcal{A}_{\mathbf{D}}(D_{\text{val}}); D_{\text{Opt}}, D_\pi). \tag{C.5}$$

We further proceed with (C.5) as follows.

$$\begin{aligned} &I(\mathcal{A}_{\mathbf{D}}(D_{\text{val}}); D_{\text{Opt}}) \\ &\leq I(\mathcal{A}_{\mathbf{D}}(D_{\text{val}}); D_{\text{Opt}}, D_\pi) \\ &= I(\mathcal{A}_{\mathbf{D}}(D_{\text{val}}); D_{\text{Opt}}, D_\pi) - I(\mathcal{A}_{\mathbf{D}}(D_{\text{val}}); D_\pi) \\ &\quad + I(\mathcal{A}_{\mathbf{D}}(D_{\text{val}}); D_\pi) \\ &= I(\mathcal{A}_{\mathbf{D}}(D_{\text{val}}); D_{\text{Opt}} | D_\pi) + I(\mathcal{A}_{\mathbf{D}}(D_{\text{val}}); D_\pi) \\ &= \sum_{j=1}^{t} I(\mathcal{A}_{\mathbf{D}}(D_{\text{val}}); \mathbf{c}_{\text{Opt}_j} | \mathbf{c}_{\text{Opt}_{j-1}}, \ldots, \mathbf{c}_{\text{Opt}_1}, D_\pi) \\ &\quad + I(\mathcal{A}_{\mathbf{D}}(D_{\text{val}}); D_\pi) \end{aligned} \tag{C.6}$$

where the last equality follows from the telescopic sum with $\mathbf{c}_{\text{Opt}_j} \in D_{\text{Opt}}$.

Using Lemma C.1, (C.6) can be followed by

$$\begin{aligned} &I(\mathcal{A}_{\mathbf{D}}(D_{\text{val}}); D_{\text{Opt}}) - I(\mathcal{A}_{\mathbf{D}}(D_{\text{val}}); D_\pi) \\ &\leq \sum_j I(\mathcal{A}_{\mathbf{D}}(D_{\text{val}}); \mathbf{c}_{\text{Opt}_j} | \mathbf{c}_{\text{Opt}_{j-1}}, \ldots, \mathbf{c}_{\text{Opt}_1}, D_\pi) \\ &\leq \sum_j \theta \min\{\log |\mathcal{Y}|, \log m\} \max_{\mathbf{c}_{\text{Opt}_j}} I(\mathcal{A}_{\mathbf{D}}(D_{\text{val}}); \mathbf{c}_{\text{Opt}_j} | D_\pi) \\ &\leq \theta \min\{\log |\mathcal{Y}|, \log m\} \sum_j I(\mathcal{A}_{\mathbf{D}}(D_{\text{val}}); \mathbf{c}_{\pi_{T+1}} | D_\pi) \\ &\leq t\theta \min\{\log |\mathcal{Y}|, \log m\} I(\mathcal{A}_{\mathbf{D}}(D_{\text{val}}); \mathbf{c}_{\pi_{T+1}} | D_\pi) \\ &\leq t\theta \min\{\log |\mathcal{Y}|, \log m\} \big(I(\mathcal{A}_{\mathbf{D}}(D_{\text{val}}); \mathbf{c}_{\pi_{T+1}} \cup D_\pi) \\ &\quad - I(\mathcal{A}_{\mathbf{D}}(D_{\text{val}}); \mathbf{c}_{\pi_{T+1}} \cup D_\pi)\big). \end{aligned} \tag{C.7}$$

We further let $\Delta_T = I(\mathcal{A}_{\mathbf{D}}(D_{\text{val}}); D_{\text{Opt}}) - I(\mathcal{A}_{\mathbf{D}}(D_{\text{val}}); D_\pi)$. (C.7) becomes:

$$\Delta_T \leq t\theta \min\{\log |\mathcal{Y}|, \log m\}(\Delta_T - \Delta_{T+1}). \tag{C.8}$$

Arranging the terms of (C.8), we have

$$t\theta \min\{\log |\mathcal{Y}|, \log m\} \Delta_{T+1} \leq (t\theta \min\{\log |\mathcal{Y}|, \log m\} - 1)\Delta_T$$

and hence

$$\begin{aligned} \Delta_{T+1} &\leq \frac{t\theta \min\{\log |\mathcal{Y}|, \log m\} - 1}{t\theta \min\{\log |\mathcal{Y}|, \log m\}} \Delta_T \\ &\leq \ldots \\ &\leq \left(\frac{t \min\{\log |\mathcal{Y}|, \log m\}\theta - 1}{t\theta \min\{\log |\mathcal{Y}|, \log m\}} \right)^T \Delta_0. \end{aligned} \tag{C.9}$$

Noting

$$\left(\frac{t\theta \min\{\log |\mathcal{Y}|, \log m\} - 1}{t\theta \min\{\log |\mathcal{Y}|, \log m\}} \right)^l \leq \exp(-l/t\theta \min\{\log |\mathcal{Y}|, \log m\})$$

we have

$$\begin{aligned} \Delta_{T+1} &\leq \exp(-T/t\theta \min\{\log |\mathcal{Y}|, \log m\})\Delta_0 \\ &= \exp(-T/t\theta \min\{\log |\mathcal{Y}|, \log m\}\gamma) I(\mathcal{A}_{\mathbf{D}}(D_{\text{val}}); D_{\text{Opt}}). \end{aligned}$$

By the definition of Δ_T, we therefore have

$$\begin{aligned} &I(\mathcal{A}_{\mathbf{D}}(D_{\text{val}}); D_\pi) \\ &\geq I(\mathcal{A}_{\mathbf{D}}(D_{\text{val}}); D_{\text{Opt}})(1 - e^{-\frac{T}{t\theta \min\{\log |\mathcal{Y}|, \log m\}}}). \end{aligned} \tag{C.10}$$

which proves the Corollary 4.2. □

D EXPERIMENT RESULTS FOR RANDOM MISSING VALUES

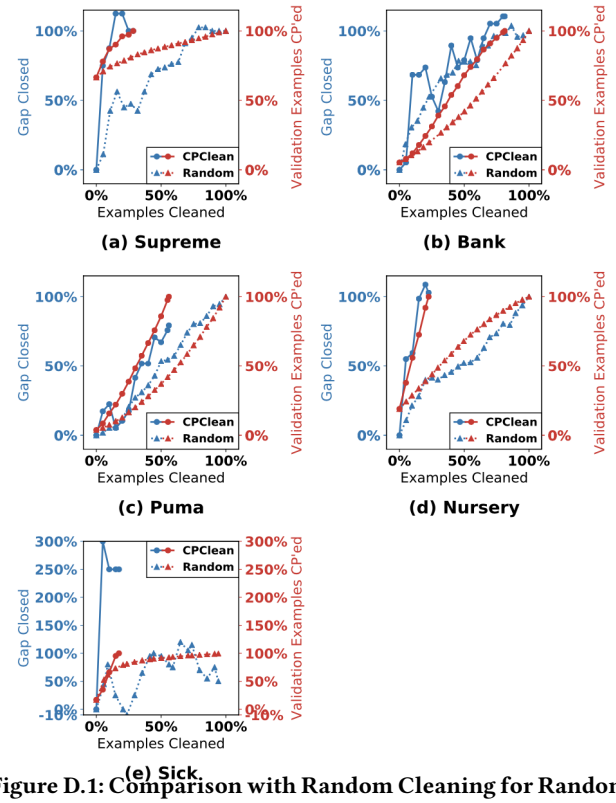

Figure D.1: Comparison with Random Cleaning for Random Missing Values

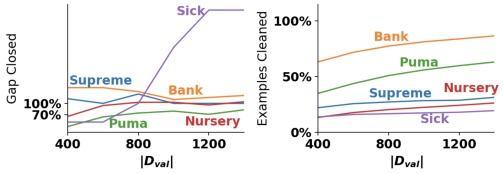

Figure D.2: Varying size of D_{val} for Random Missing Values.