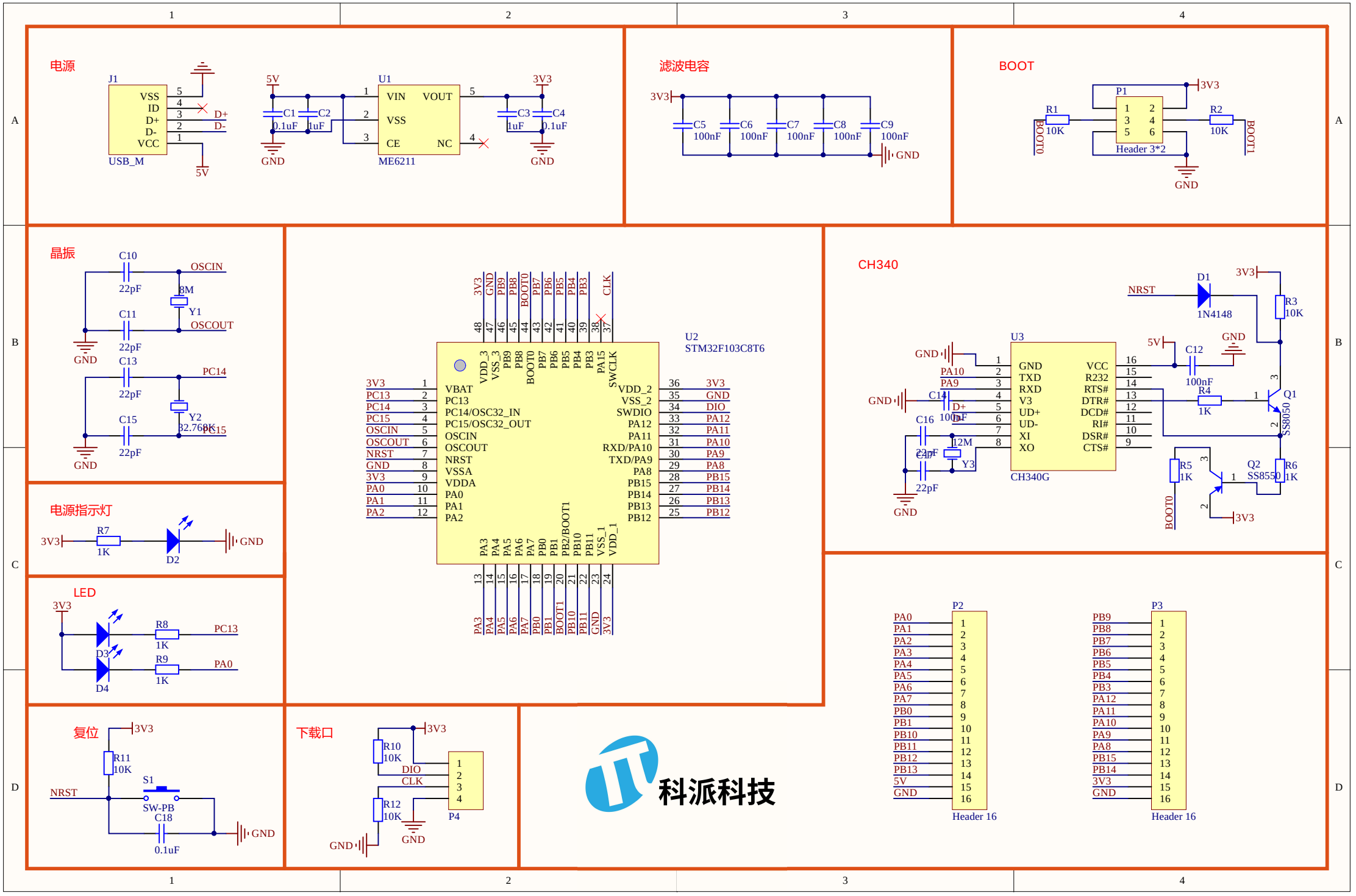
电源
J1
USB_M
VSS
ID
D+
D-
VCC
5V
D+
D-
U1
ME6211
VIN
VOUT
VSS
CE
NC
C1 0.1uF
C2 1uF
C3 1uF
C4 0.1uF
GND
3V3
滤波电容
C5 100nF
C6 100nF
C7 100nF
C8 100nF
C9 100nF
BOOT
P1
Header 3*2
R1 10K
R2 10K
BOOT0
BOOT1
晶振
C10 22pF
C11 22pF
C13 22pF
C15 22pF
Y1 8M
Y2 32.768K
OSCIN
OSCOUT
PC14
PC15
电源指示灯
R7 1K
D2
LED
R8 1K
R9 1K
D3
D4
PC13
PA0
复位
R11 10K
S1
SW-PB
C18 0.1uF
NRST
下载口
R10 10K
R12 10K
DIO
CLK
P4
U2
STM32F103C8T6
VBAT
PC13
PC14/OSCC32_IN
PC15/OSCC32_OUT
OSCIN
OSCOUT
NRST
VSSA
VDDA
PA0
PA1
PA2
VDD_2
VSS_2
SWDIO
PA12
PA11
RXD/PA10
TXD/PA9
PA8
PB15
PB14
PB13
PB12
CH340
U3
CH340G
GND
TXD
RXD
V3
UD+
UD-
XI
XO
VCC
R232
RTS#
DTR#
DCD#
RI#
DSR#
CTS#
D1 1N4148
R3 10K
R4 1K
R5 1K
R6 1K
Q1 SS8050
Q2 SS8550
C12 100nF
C14 100nF
C16 22pF
C17 22pF
Y3 12M
P2
Header 16
P3
Header 16
科派科技